FPGAMALL
Authorized Distributor

https://www.fpgamall.com

THE DATASHEET OF FPGA

sales@fpgamall.com
+00852-56428680

Intel® MAX® 10 FPGA Device Datasheet

Subscribe
Send Feedback

M10-DATASHEET | 2020.06.30
Latest document on the web: PDF | HTML

Contents

Intel® MAX® 10 FPGA Device Datasheet.....3
Electrical Characteristics.....3
Operating Conditions.....4
Switching Characteristics.....25
Core Performance Specifications.....26
Periphery Performance Specifications.....35
Configuration Specifications.....57
JTAG Timing Parameters.....58
Remote System Upgrade Circuitry Timing Specifications.....59
User Watchdog Internal Circuitry Timing Specifications.....59
Uncompressed Raw Binary File (.rbf) Sizes.....59
Internal Configuration Time.....60
Internal Configuration Timing Parameter.....61
I/O Timing.....61
Programmable IOE Delay.....62
Programmable IOE Delay On Row Pins.....62
Programmable IOE Delay for Column Pins.....63
Glossary.....64
Document Revision History for the Intel MAX 10 FPGA Device Datasheet.....67

M10-DATASHEET | 2020.06.30

Send Feedback

Intel® MAX® 10 FPGA Device Datasheet

This datasheet describes the electrical characteristics, switching characteristics, configuration specifications, and timing for Intel MAX® 10 devices.

Table 1. Intel MAX 10 Device Grades and Speed Grades Supported

Device Grade	Speed Grade Supported
Commercial	• –C7 • –C8 (slowest)
Industrial	• –I6 (fastest) • –I7
Automotive	• –A6 • –A7

Note: The –I6 and –A6 speed grades of the Intel MAX 10 FPGA devices are not available by default in the Intel Quartus® Prime software. Contact your local Intel sales representatives for support.

Related Information

Device Ordering Information, Intel MAX 10 FPGA Device Overview
Provides more information about the densities and packages of devices in the Intel MAX 10.

Electrical Characteristics

The following sections describe the operating conditions and power consumption of Intel MAX 10 devices.

Intel Corporation. All rights reserved. Agilex, Altera, Arria, Cyclone, Enpirion, Intel, the Intel logo, MAX, Nios, Quartus and Stratix words and logos are trademarks of Intel Corporation or its subsidiaries in the U.S. and/or other countries. Intel warrants performance of its FPGA and semiconductor products to current specifications in accordance with Intel's standard warranty, but reserves the right to make changes to any products and services at any time without notice. Intel assumes no responsibility or liability arising out of the application or use of any information, product, or service described herein except as expressly agreed to in writing by Intel. Intel customers are advised to obtain the latest version of device specifications before relying on any published information and before placing orders for products or services.
*Other names and brands may be claimed as the property of others.

ISO 9001:2015 Registered

Operating Conditions

Intel MAX 10 devices are rated according to a set of defined parameters. To maintain the highest possible performance and reliability of the Intel MAX 10 devices, you must consider the operating requirements described in this section.

Absolute Maximum Ratings

This section defines the maximum operating conditions for Intel MAX 10 devices. The values are based on experiments conducted with the devices and theoretical modeling of breakdown and damage mechanisms. The functional operation of the device is not implied for these conditions.

Caution: Conditions outside the range listed in the absolute maximum ratings tables may cause permanent damage to the device. Additionally, device operation at the absolute maximum ratings for extended periods of time may have adverse effects on the device.

Single Supply Devices Absolute Maximum Ratings

Table 2. Absolute Maximum Ratings for Intel MAX 10 Single Supply Devices

Symbol	Parameter	Min	Max	Unit
V_{CC_ONE}	Supply voltage for core and periphery through on-die voltage regulator	–0.5	3.9	V
V_{CCIO}	Supply voltage for input and output buffers	–0.5	3.9	V
V_{CCA}	Supply voltage for phase-locked loop (PLL) regulator and analog-to-digital converter (ADC) block (analog)	–0.5	3.9	V

Dual Supply Devices Absolute Maximum Ratings

Table 3. Absolute Maximum Ratings for Intel MAX 10 Dual Supply Devices

Symbol	Parameter	Min	Max	Unit
V_{CC}	Supply voltage for core and periphery	–0.5	1.63	V
V_{CCIO}	Supply voltage for input and output buffers	–0.5	3.9	V
V_{CCA}	Supply voltage for PLL regulator (analog)	–0.5	3.41	V

continued...

Symbol	Parameter	Min	Max	Unit
V_{CCD_PLL}	Supply voltage for PLL regulator (digital)	–0.5	1.63	V
V_{CCA_ADC}	Supply voltage for ADC analog block	–0.5	3.41	V
V_{CCINT}	Supply voltage for ADC digital block	–0.5	1.63	V

Absolute Maximum Ratings

Table 4. Absolute Maximum Ratings for Intel MAX 10 Devices

Symbol	Parameter	Min	Max	Unit
V_I	DC input voltage	–0.5	4.12	V
I_{OUT}	DC output current per pin	–25	25	mA
T_{STG}	Storage temperature	–65	150	°C
T_J	Operating junction temperature	–40	125	°C

Maximum Allowed Overshoot During Transitions over a 11.4-Year Time Frame

During transitions, input signals may overshoot to the voltage listed in the following table and undershoot to –2.0 V for input currents less than 100 mA and periods shorter than 20 ns.

The maximum allowed overshoot duration is specified as a percentage of high time over the lifetime of the device. A DC signal is equivalent to 100% duty cycle.

For example, a signal that overshoots to 4.17 V can only be at 4.17 V for ~11.7% over the lifetime of the device; for a device lifetime of 11.4 years, this amounts to 1.33 years.

Table 5. Maximum Allowed Overshoot During Transitions over a 11.4-Year Time Frame for Intel MAX 10 Devices

Condition (V)	Overshoot Duration as % of High Time	Unit
4.12	100.0	%
4.17	11.7	%
4.22	7.1	%
4.27	4.3	%

continued...

Condition (V)	Overshoot Duration as % of High Time	Unit
4.32	2.6	%
4.37	1.6	%
4.42	1.0	%
4.47	0.6	%
4.52	0.3	%
4.57	0.2	%

Recommended Operating Conditions

This section lists the functional operation limits for the AC and DC parameters for Intel MAX 10 devices. The tables list the steady-state voltage values expected from Intel MAX 10 devices. Power supply ramps must all be strictly monotonic, without plateaus.

Single Supply Devices Power Supplies Recommended Operating Conditions

Table 6. Power Supplies Recommended Operating Conditions for Intel MAX 10 Single Supply Devices

Symbol	Parameter	Condition	Min	Typ	Max	Unit
V_{CC_ONE}(1)	Supply voltage for core and periphery through on-die voltage regulator	—	2.85/3.135	3.0/3.3	3.15/3.465	V
V_{CCIO}(2)	Supply voltage for input and output buffers	3.3 V	3.135	3.3	3.465	V
		3.0 V	2.85	3	3.15	V
		2.5 V	2.375	2.5	2.625	V
		1.8 V	1.71	1.8	1.89	V
		1.5 V	1.425	1.5	1.575	V
		1.35 V	1.2825	1.35	1.4175	V

continued...

(1) V_{CCA} must be connected to V_{CC_ONE} through a filter.

(2) V_{CCIO} for all I/O banks must be powered up during user mode because V_{CCIO} I/O banks are used for the ADC and I/O functionalities.

Symbol	Parameter	Condition	Min	Typ	Max	Unit
		1.2 V	1.14	1.2	1.26	V
		1.0 V	0.95	1.0	1.05	V
V_{CCA} (1)	Supply voltage for PLL regulator and ADC block (analog)	—	2.85/3.135	3.0/3.3	3.15/3.465	V

Dual Supply Devices Power Supplies Recommended Operating Conditions

Table 7. Power Supplies Recommended Operating Conditions for Intel MAX 10 Dual Supply Devices

Symbol	Parameter	Condition	Min	Typ	Max	Unit
V_{CC}	Supply voltage for core and periphery	—	1.15	1.2	1.25	V
V_{CCIO} (3)	Supply voltage for input and output buffers	3.3 V	3.135	3.3	3.465	V
		3.0 V	2.85	3	3.15	V
		2.5 V	2.375	2.5	2.625	V
		1.8 V	1.71	1.8	1.89	V
		1.5 V	1.425	1.5	1.575	V
		1.35 V	1.2825	1.35	1.4175	V
		1.2 V	1.14	1.2	1.26	V
		1.0 V	0.95	1.0	1.05	V
V_{CCA}(4)	Supply voltage for PLL regulator (analog)	—	2.375	2.5	2.625	V
V_{CCD_PLL}(5)	Supply voltage for PLL regulator (digital)	—	1.15	1.2	1.25	V
V_{CCA_ADC}	Supply voltage for ADC analog block	—	2.375	2.5	2.625	V
V_{CCINT}	Supply voltage for ADC digital block	—	1.15	1.2	1.25	V

(3) V_{CCIO} for all I/O banks must be powered up during user mode because V_{CCIO} I/O banks are used for the ADC and I/O functionalities.

(4) All V_{CCA} pins must be powered to 2.5 V (even when PLLs are not used), and must be powered up and powered down at the same time.

(5) V_{CCD_PLL} must always be connected to V_{CC} through a decoupling capacitor and ferrite bead.

Recommended Operating Conditions

Table 8. Recommended Operating Conditions for Intel MAX 10 Devices

Symbol	Parameter	Condition	Min	Max	Unit
V_I	DC input voltage	—	–0.5	3.6	V
V_O	Output voltage for I/O pins	—	0	V_{CCIO}	V
T_J	Operating junction temperature	Commercial	0	85	°C
		Industrial	–40[6]	100	°C
		Automotive	–40[6]	125	°C
t_{RAMP}	Power supply ramp time	—	[7]	10	ms
I_{Diode}	Magnitude of DC current across PCI* clamp diode when enabled	—	—	10	mA

Programming/Erasure Specifications

Table 9. Programming/Erasure Specifications for Intel MAX 10 Devices

This table shows the programming cycles and data retention duration of the user flash memory (UFM) and configuration flash memory (CFM) blocks.

For more information about data retention duration with 10,000 programming cycles for automotive temperature devices, contact your Intel quality representative.

Erase and reprogram cycles (E/P) [8] (Cycles/page)	Temperature (°C)	Data retention duration (Years)
10,000	85	20
10,000	100	10

(6) –40°C is only applicable to Start of Test, when the device is powered-on. The device does not stay at the minimum junction temperature for a long time.

(7) There is no absolute minimum value for the ramp time requirement. Intel characterized the minimum ramp time at 200 µs.

(8) The number of E/P cycles applies to the smallest possible flash block that can be erased or programmed in each Intel MAX 10 device. Each Intel MAX 10 device has multiple flash pages per device.

DC Characteristics

Supply Current and Power Consumption

Intel offers two ways to estimate power for your design—the Excel-based Early Power Estimator (EPE) and the Intel Quartus Prime Power Analyzer feature.

Use the Excel-based EPE before you start your design to estimate the supply current for your design. The EPE provides a magnitude estimate of the device power because these currents vary greatly with the usage of the resources.

The Intel Quartus Prime Power Analyzer provides better quality estimates based on the specifics of the design after you complete place-and-route. The Power Analyzer can apply a combination of user-entered, simulation-derived, and estimated signal activities that, when combined with detailed circuit models, yield very accurate power estimates.

Related Information

- Early Power Estimator User Guide
  Provides more information about power estimation tools.
- Power Analysis chapter, Intel Quartus Prime Handbook
  Provides more information about power estimation tools.

I/O Pin Leakage Current

The values in the table are specified for normal device operation. The values vary during device power-up. This applies for all V_{CCIO} settings (3.3, 3.0, 2.5, 1.8, 1.5, 1.35, and 1.2 V).

10 µA I/O leakage current limit is applicable when the internal clamping diode is off. A higher current can be the observed when the diode is on.

Input channel leakage of ADC I/O pins due to hot socket is up to maximum of 1.8 mA. The input channel leakage occurs when the ADC IP core is enabled or disabled. This is applicable to all Intel MAX 10 devices with ADC IP core, which are 10M04, 10M08, 10M16, 10M25, 10M40, and 10M50 devices. The ADC I/O pins are in Bank 1A.

Table 10. I/O Pin Leakage Current for Intel MAX 10 Devices

Symbol	Parameter	Condition	Min	Max	Unit
I_I	Input pin leakage current	V_I = 0 V to $V_{CCIOMAX}$	–10	10	µA
I_{OZ}	Tristated I/O pin leakage current	V_O = 0 V to $V_{CCIOMAX}$	–10	10	µA

Table 11. ADC_VREF Pin Leakage Current for Intel MAX 10 Devices

Symbol	Parameter	Condition	Min	Max	Unit
I_{adc_vref}	ADC_VREF pin leakage current	Single supply mode	—	10	µA
		Dual supply mode	—	20	µA

Bus Hold Parameters

Bus hold retains the last valid logic state after the source driving it either enters the high impedance state or is removed. Each I/O pin has an option to enable bus hold in user mode. Bus hold is always disabled in configuration mode.

Table 12. Bus Hold Parameters for Intel MAX 10 Devices

Parameter	Condition	V_{CCIO} (V)												Unit
		1.2		1.5		1.8		2.5		3.0		3.3		
		Min	Max	Min	Max	Min	Max	Min	Max	Min	Max	Min	Max	
Bus-hold low, sustaining current	$V_{IN} > V_{IL}$ (maximum)	8	—	12	—	30	—	50	—	70	—	70	—	µA
Bus-hold high, sustaining current	$V_{IN} < V_{IH}$ (minimum)	–8	—	–12	—	–30	—	–50	—	–70	—	–70	—	µA
Bus-hold low, overdrive current	$0\ V < V_{IN} < V_{CCIO}$	—	125	—	175	—	200	—	300	—	500	—	500	µA
Bus-hold high, overdrive current	$0\ V < V_{IN} < V_{CCIO}$	—	–125	—	–175	—	–200	—	–300	—	–500	—	–500	µA
Bus-hold trip point	—	0.3	0.9	0.375	1.125	0.68	1.07	0.7	1.7	0.8	2	0.8	2	V

Series OCT without Calibration Specifications

Table 13. Series OCT without Calibration Specifications for Intel MAX 10 Devices

This table shows the variation of on-chip termination (OCT) without calibration across process, voltage, and temperature (PVT).

Description	V_{CCIO} (V)	Resistance Tolerance		Unit
		–C7, –I6, –I7, –A6, –A7	–C8	
Series OCT without calibration	3.00	±35	±30	%
	2.50	±35	±30	%
	1.80	±40	±35	%
	1.50	±40	±40	%
	1.35	±40	±50	%
	1.20	±45	±60	%

Series OCT with Calibration at Device Power-Up Specifications

Table 14. Series OCT with Calibration at Device Power-Up Specifications for Intel MAX 10 Devices

OCT calibration is automatically performed at device power-up for OCT enabled I/Os.

Description	V_{CCIO} (V)	Calibration Accuracy	Unit
Series OCT with calibration at device power-up	3.00	±12	%
	2.50	±12	%
	1.80	±12	%
	1.50	±12	%
	1.35	±12	%
	1.20	±12	%

OCT Variation after Calibration at Device Power-Up

The OCT resistance may vary with the variation of temperature and voltage after calibration at device power-up.

Use the following table and equation to determine the final OCT resistance considering the variations after calibration at device power-up.

Table 15. OCT Variation after Calibration at Device Power-Up for Intel MAX 10 Devices

This table lists the change percentage of the OCT resistance with voltage and temperature.

Description	Nominal Voltage	dR/dT (%/°C)	dR/dV (%/mV)
OCT variation after calibration at device power-up	3.00	0.25	–0.027
	2.50	0.245	–0.04
	1.80	0.242	–0.079
	1.50	0.235	–0.125
	1.35	0.229	–0.16
	1.20	0.197	–0.208

Figure 1. Equation for OCT Resistance after Calibration at Device Power-Up

$$\Delta R_V = (V_2 - V_1) \times 1000 \times dR/dV$$

$$\Delta R_T = (T_2 - T_1) \times dR/dT$$

$$\text{For } \Delta R_X < 0; MF_X = 1/(|\Delta R_X|/100 + 1)$$

$$\text{For } \Delta R_X > 0; MF_X = \Delta R_X/100 + 1$$

$$MF = MF_V \times MF_T$$

$$R_{final} = R_{initial} \times MF$$

The definitions for equation are as follows:

- T_1 is the initial temperature.
- T_2 is the final temperature.
- MF is multiplication factor.
- $R_{initial}$ is initial resistance.
- R_{final} is final resistance.

- Subscript x refers to both V and T.
- ΔR_V is variation of resistance with voltage.
- ΔR_T is variation of resistance with temperature.
- dR/dT is the change percentage of resistance with temperature after calibration at device power-up.
- dR/dV is the change percentage of resistance with voltage after calibration at device power-up.
- V_1 is the initial voltage.
- V_2 is final voltage.

The following figure shows the example to calculate the change of 50 Ω I/O impedance from 25°C at 3.0 V to 85°C at 3.15 V.

Figure 2. Example for OCT Resistance Calculation after Calibration at Device Power-Up

$$\Delta R_V = (3.15 - 3) \times 1000 \times -0.027 = -4.05$$

$$\Delta R_T = (85 - 25) \times 0.25 = 15$$

Because ΔR_V is negative,

$$MF_V = 1/(4.05/100 + 1) = 0.961$$

Because ΔR_T is positive,

$$MF_T = 15/100 + 1 = 1.15$$

$$MF = 0.961 \times 1.15 = 1.105$$

$$R_{final} = 50 \times 1.105 = 55.25\Omega$$

Pin Capacitance

Table 16. Pin Capacitance for Intel MAX 10 Devices

Symbol	Parameter	Maximum	Unit
C_{IOB}	Input capacitance on bottom I/O pins	8	pF
C_{IOLRT}	Input capacitance on left/right/top I/O pins	7	pF
C_{LVDSB}	Input capacitance on bottom I/O pins with dedicated LVDS output (9)	8	pF
C_{ADCL}	Input capacitance on left I/O pins with ADC input (10)	9	pF
$C_{VREFLRT}$	Input capacitance on left/right/top dual purpose V_{REF} pin when used as V_{REF} or user I/O pin (11)	48	pF
C_{VREFB}	Input capacitance on bottom dual purpose V_{REF} pin when used as V_{REF} or user I/O pin	50	pF
C_{CLKB}	Input capacitance on bottom dual purpose clock input pins (12)	7	pF
C_{CLKLRT}	Input capacitance on left/right/top dual purpose clock input pins (12)	6	pF

Internal Weak Pull-Up Resistor

All I/O pins, except configuration, test, and JTAG pins, have an option to enable weak pull-up.

(9) Dedicated LVDS output buffer is only available at bottom I/O banks.

(10) ADC pins are only available at left I/O banks.

(11) When V_{REF} pin is used as regular input or output, F_{max} performance is reduced due to higher pin capacitance. Using the V_{REF} pin capacitance specification from device datasheet, perform SI analysis on your board setup to determine the F_{max} of your system.

(12) 10M40 and 10M50 devices have dual purpose clock input pins at top/bottom I/O banks.

Table 17. Internal Weak Pull-Up Resistor for Intel MAX 10 Devices

Pin pull-up resistance values may be lower if an external source drives the pin higher than V_{CCIO}.

Symbol	Parameter	Condition	Min	Typ	Max	Unit
$R_{_PU}$	Value of I/O pin (dedicated and dual-purpose) pull-up resistor before and during configuration, as well as user mode if the programmable pull-up resistor option is enabled	V_{CCIO} = 3.3 V ± 5%	7	12	34	kΩ
		V_{CCIO} = 3.0 V ± 5%	8	13	37	kΩ
		V_{CCIO} = 2.5 V ± 5%	10	15	46	kΩ
		V_{CCIO} = 1.8 V ± 5%	16	25	75	kΩ
		V_{CCIO} = 1.5 V ± 5%	20	36	106	kΩ
		V_{CCIO} = 1.2 V ± 5%	33	82	179	kΩ

Hot-Socketing Specifications

Table 18. Hot-Socketing Specifications for Intel MAX 10 Devices

Symbol	Parameter	Maximum
$I_{IOPIN(DC)}$	DC current per I/O pin	300 µA
$I_{IOPIN(AC)}$	AC current per I/O pin	8 mA [13]

Hysteresis Specifications for Schmitt Trigger Input

Intel MAX 10 devices support Schmitt trigger input on all I/O pins. A Schmitt trigger feature introduces hysteresis to the input signal for improved noise immunity, especially for signal with slow edge rate.

(13) The I/O ramp rate is 10 ns or more. For ramp rates faster than 10 ns, $|I_{IOPIN}|$ = C dv/dt, in which C is I/O pin capacitance and dv/dt is the slew rate.

Table 19. Hysteresis Specifications for Schmitt Trigger Input for Intel MAX 10 Devices

Symbol	Parameter	Condition	Minimum	Unit
V_{HYS}	Hysteresis for Schmitt trigger input	V_{CCIO} = 3.3 V	180	mV
		V_{CCIO} = 2.5 V	150	mV
		V_{CCIO} = 1.8 V	120	mV
		V_{CCIO} = 1.5 V	110	mV

Figure 3. LVTTL/LVCMOS Input Standard Voltage Diagram

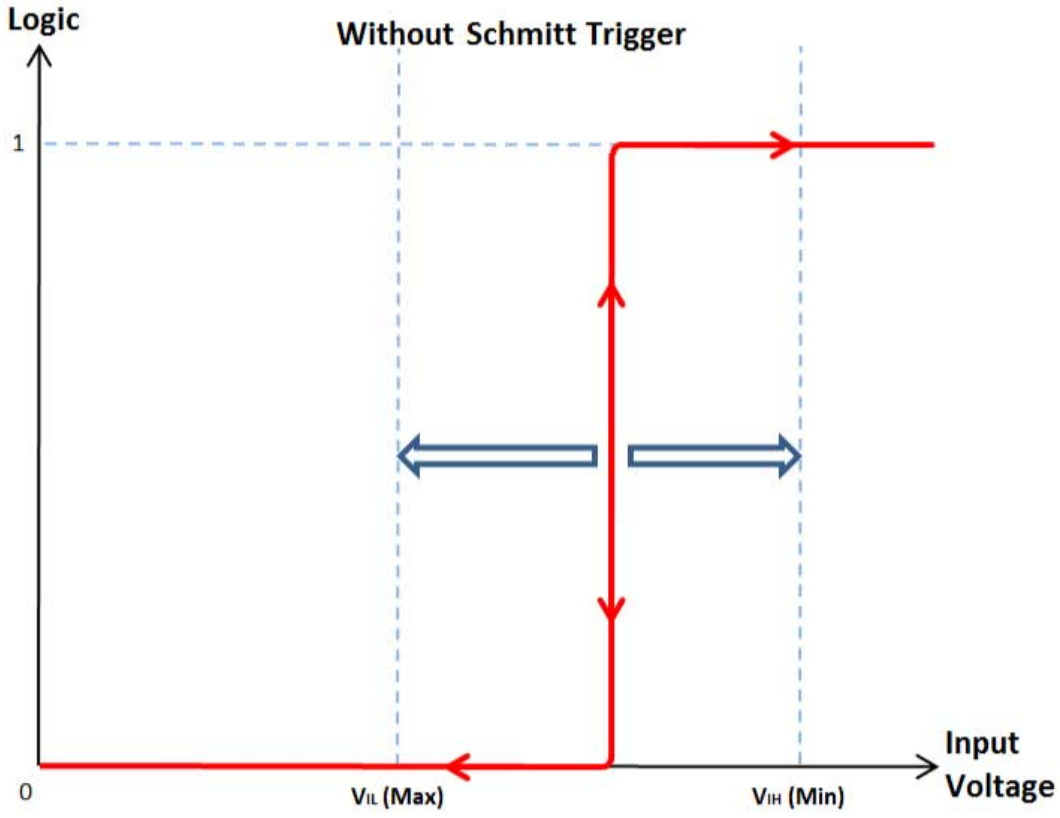

Figure 4. Schmitt Trigger Input Standard Voltage Diagram

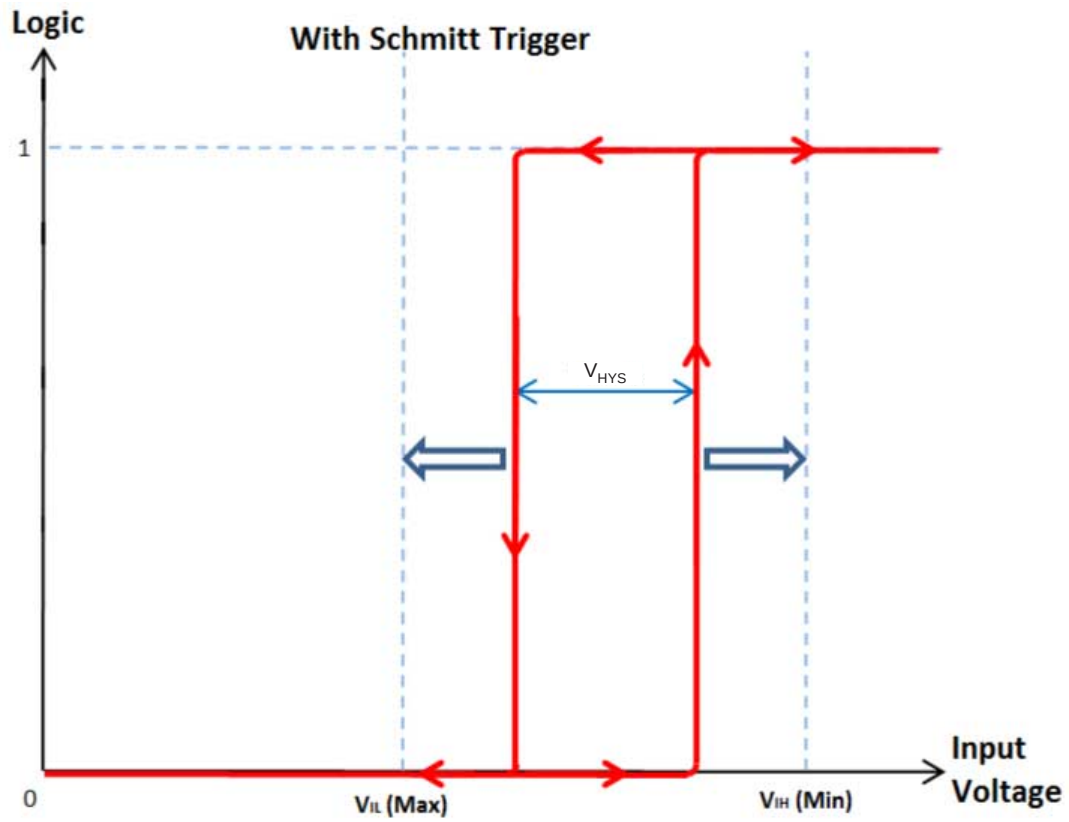

I/O Standards Specifications

Tables in this section list input voltage (V_{IH} and V_{IL}), output voltage (V_{OH} and V_{OL}), and current drive characteristics (I_{OH} and I_{OL}) for various I/O standards supported by Intel MAX 10 devices.

For minimum voltage values, use the minimum V_{CCIO} values. For maximum voltage values, use the maximum V_{CCIO} values.

You must perform timing closure analysis to determine the maximum achievable frequency for general purpose I/O standards.

Single-Ended I/O Standards Specifications

Table 20. Single-Ended I/O Standards Specifications for Intel MAX 10 Devices

To meet the I_{OL} and I_{OH} specifications, you must set the current strength settings accordingly. For example, to meet the 3.3-V LVTTL specification (4 mA), you should set the current strength settings to 4 mA. Setting at lower current strength may not meet the I_{OL} and I_{OH} specifications in the datasheet.

I/O Standard	V_{CCIO} (V)			V_{IL} (V)		V_{IH} (V)		V_{OL} (V)	V_{OH} (V)	I_{OL} (mA)	I_{OH} (mA)
	Min	Typ	Max	Min	Max	Min	Max	Max	Min		
3.3 V LVTTL	3.135	3.3	3.465	–0.3	0.8	1.7	3.6	0.45	2.4	4	–4
3.3 V LVCMOS	3.135	3.3	3.465	–0.3	0.8	1.7	3.6	0.2	V_{CCIO} – 0.2	2	–2
3.0 V LVTTL	2.85	3	3.15	–0.3	0.8	1.7	V_{CCIO} + 0.3	0.45	2.4	4	–4
3.0 V LVCMOS	2.85	3	3.15	–0.3	0.8	1.7	V_{CCIO} + 0.3	0.2	V_{CCIO} – 0.2	0.1	–0.1
2.5 V LVTTL and LVCMOS	2.375	2.5	2.625	–0.3	0.7	1.7	V_{CCIO} + 0.3	0.4	2	1	–1
1.8 V LVTTL and LVCMOS	1.71	1.8	1.89	–0.3	0.35 × V_{CCIO}	0.65 × V_{CCIO}	2.25	0.45	V_{CCIO} – 0.45	2	–2
1.5 V LVCMOS	1.425	1.5	1.575	–0.3	0.35 × V_{CCIO}	0.65 × V_{CCIO}	V_{CCIO} + 0.3	0.25 × V_{CCIO}	0.75 × V_{CCIO}	2	–2
1.2 V LVCMOS	1.14	1.2	1.26	–0.3	0.35 × V_{CCIO}	0.65 × V_{CCIO}	V_{CCIO} + 0.3	0.25 × V_{CCIO}	0.75 × V_{CCIO}	2	–2
1.0 V LVCMOS [14]	0.95	1.0	1.05	–0.3	0.35 × V_{CCIO}	0.65 × V_{CCIO}	V_{CCIO} + 0.3	0.25 × V_{CCIO}	0.75 × V_{CCIO}	4	–4
3.3 V Schmitt Trigger	3.135	3.3	3.465	–0.3	0.8	1.7	V_{CCIO} + 0.3	—	—	—	—
2.5 V Schmitt Trigger	2.375	2.5	2.625	–0.3	0.7	1.7	V_{CCIO} + 0.3	—	—	—	—

continued...

(14) The 1.0 V LVCMOS I/O standard is only supported on the following devices: 10M02SCU324C8G, 10M04SCU324C8G, 10M08SCU324C8G, 10M16SCU324C8G, 10M16SCU169C8G, 10M16SAU169C8G, 10M16DCF484C8G, 10M16DAF484C8G, 10M25DCF484C8G, 10M25DAF484C8G, 10M40DCF484C8G, 10M40DAF484C8G, 10M50DCF484C8G, 10M50DAF484C8G.

I/O Standard	V_{CCIO} (V)			V_{IL} (V)		V_{IH} (V)		V_{OL} (V)	V_{OH} (V)	I_{OL} (mA)	I_{OH} (mA)
	Min	Typ	Max	Min	Max	Min	Max	Max	Min		
1.8 V Schmitt Trigger	1.71	1.8	1.89	–0.3	0.35 × V_{CCIO}	0.65 × V_{CCIO}	V_{CCIO} + 0.3	—	—	—	—
1.5 V Schmitt Trigger	1.425	1.5	1.575	–0.3	0.35 × V_{CCIO}	0.65 × V_{CCIO}	V_{CCIO} + 0.3	—	—	—	—
3.0 V PCI	2.85	3	3.15	—	0.3 × V_{CCIO}	0.5 × V_{CCIO}	V_{CCIO} + 0.3	0.1 × V_{CCIO}	0.9 × V_{CCIO}	1.5	–0.5

Single-Ended SSTL, HSTL, and HSUL I/O Reference Voltage Specifications

Table 21. Single-Ended SSTL, HSTL, and HSUL I/O Reference Voltage Specifications for Intel MAX 10 Devices

I/O Standard	V_{CCIO} (V)			V_{REF} (V)			V_{TT} (V) [15]		
	Min	Typ	Max	Min	Typ	Max	Min	Typ	Max
SSTL-2 Class I, II	2.375	2.5	2.625	1.19	1.25	1.31	V_{REF} – 0.04	V_{REF}	V_{REF} + 0.04
SSTL-18 Class I, II	1.7	1.8	1.9	0.833	0.9	0.969	V_{REF} – 0.04	V_{REF}	V_{REF} + 0.04
SSTL-15 Class I, II	1.425	1.5	1.575	0.49 × V_{CCIO}	0.5 × V_{CCIO}	0.51 × V_{CCIO}	0.49 × V_{CCIO}	0.5 × V_{CCIO}	0.51 × V_{CCIO}
SSTL-135 Class I, II	1.283	1.35	1.45	0.49 × V_{CCIO}	0.5 × V_{CCIO}	0.51 × V_{CCIO}	0.49 × V_{CCIO}	0.5 × V_{CCIO}	0.51 × V_{CCIO}
HSTL-18 Class I, II	1.71	1.8	1.89	0.85	0.9	0.95	0.85	0.9	0.95
HSTL-15 Class I, II	1.425	1.5	1.575	0.71	0.75	0.79	0.71	0.75	0.79
HSTL-12 Class I, II	1.14	1.2	1.26	0.48 × V_{CCIO} [16]	0.5 × V_{CCIO} [16]	0.52 × V_{CCIO} [16]	—	0.5 × V_{CCIO}	—
				0.47 × V_{CCIO} [17]	0.5 × V_{CCIO} [17]	0.53 × V_{CCIO} [17]			
HSUL-12	1.14	1.2	1.3	0.49 × V_{CCIO}	0.5 × V_{CCIO}	0.51 × V_{CCIO}	—	—	—

(15) V_{TT} of transmitting device must track V_{REF} of the receiving device.

(16) Value shown refers to DC input reference voltage, $V_{REF(DC)}$.

(17) Value shown refers to AC input reference voltage, $V_{REF(AC)}$.

Single-Ended SSTL, HSTL, and HSUL I/O Standards Signal Specifications

Table 22. Single-Ended SSTL, HSTL, and HSUL I/O Standards Signal Specifications for Intel MAX 10 Devices

To meet the I_{OL} and I_{OH} specifications, you must set the current strength settings accordingly. For example, to meet the SSTL-15 Class I specification (8 mA), you should set the current strength settings to 8 mA. Setting at lower current strength may not meet the I_{OL} and I_{OH} specifications in the datasheet.

I/O Standard	$V_{IL(DC)}$ (V)		$V_{IH(DC)}$ (V)		$V_{IL(AC)}$ (V)		$V_{IH(AC)}$ (V)		V_{OL} (V)	V_{OH} (V)	I_{OL} (mA)	I_{OH} (mA)
	Min	Max	Min	Max	Min	Max	Min	Max	Max	Min		
SSTL-2 Class I	—	V_{REF} – 0.18	V_{REF} + 0.18	—	—	V_{REF} – 0.31	V_{REF} + 0.31	—	V_{TT} – 0.57	V_{TT} + 0.57	8.1	–8.1
SSTL-2 Class II	—	V_{REF} – 0.18	V_{REF} + 0.18	—	—	V_{REF} – 0.31	V_{REF} + 0.31	—	V_{TT} – 0.76	V_{TT} + 0.76	16.4	–16.4
SSTL-18 Class I	—	V_{REF} – 0.125	V_{REF} + 0.125	—	—	V_{REF} – 0.25	V_{REF} + 0.25	—	V_{TT} – 0.475	V_{TT} + 0.475	6.7	–6.7
SSTL-18 Class II	—	V_{REF} – 0.125	V_{REF} + 0.125	—	—	V_{REF} – 0.25	V_{REF} + 0.25	—	0.28	V_{CCIO} – 0.28	13.4	–13.4
SSTL-15 Class I	—	V_{REF} – 0.1	V_{REF} + 0.1	—	—	V_{REF} – 0.175	V_{REF} + 0.175	—	0.2 × V_{CCIO}	0.8 × V_{CCIO}	8	–8
SSTL-15 Class II	—	V_{REF} – 0.1	V_{REF} + 0.1	—	—	V_{REF} – 0.175	V_{REF} + 0.175	—	0.2 × V_{CCIO}	0.8 × V_{CCIO}	16	–16
SSTL-135	—	V_{REF} – 0.09	V_{REF} + 0.09	—	—	V_{REF} – 0.16	V_{REF} + 0.16	—	0.2 × V_{CCIO}	0.8 × V_{CCIO}	—	—
HSTL-18 Class I	—	V_{REF} – 0.1	V_{REF} + 0.1	—	—	V_{REF} – 0.2	V_{REF} + 0.2	—	0.4	V_{CCIO} – 0.4	8	–8
HSTL-18 Class II	—	V_{REF} – 0.1	V_{REF} + 0.1	—	—	V_{REF} – 0.2	V_{REF} + 0.2	—	0.4	V_{CCIO} – 0.4	16	–16
HSTL-15 Class I	—	V_{REF} – 0.1	V_{REF} + 0.1	—	—	V_{REF} – 0.2	V_{REF} + 0.2	—	0.4	V_{CCIO} – 0.4	8	–8
HSTL-15 Class II	—	V_{REF} – 0.1	V_{REF} + 0.1	—	—	V_{REF} – 0.2	V_{REF} + 0.2	—	0.4	V_{CCIO} – 0.4	16	–16

continued...

I/O Standard	$V_{IL(DC)}$ (V)		$V_{IH(DC)}$ (V)		$V_{IL(AC)}$ (V)		$V_{IH(AC)}$ (V)		V_{OL} (V)	V_{OH} (V)	I_{OL} (mA)	I_{OH} (mA)
	Min	Max	Min	Max	Min	Max	Min	Max	Max	Min		
HSTL-12 Class I	–0.15	V_{REF} – 0.08	V_{REF} + 0.08	V_{CCIO} + 0.15	–0.24	V_{REF} – 0.15	V_{REF} + 0.15	V_{CCIO} + 0.24	0.25 × V_{CCIO}	0.75 × V_{CCIO}	8	–8
HSTL-12 Class II	–0.15	V_{REF} – 0.08	V_{REF} + 0.08	V_{CCIO} + 0.15	–0.24	V_{REF} – 0.15	V_{REF} + 0.15	V_{CCIO} + 0.24	0.25 × V_{CCIO}	0.75 × V_{CCIO}	14	–14
HSUL-12	—	V_{REF} – 0.13	V_{REF} + 0.13	—	—	V_{REF} – 0.22	V_{REF} + 0.22	—	0.1 × V_{CCIO}	0.9 × V_{CCIO}	—	—

Differential SSTL I/O Standards Specifications

Differential SSTL requires a V_{REF} input.

Table 23. Differential SSTL I/O Standards Specifications for Intel MAX 10 Devices

I/O Standard	V_{CCIO} (V)			$V_{Swing(DC)}$ (V)		$V_{X(AC)}$ (V)			$V_{Swing(AC)}$ (V)	
	Min	Typ	Max	Min	Max[18]	Min	Typ	Max	Min	Max
SSTL-2 Class I, II	2.375	2.5	2.625	0.36	V_{CCIO}	$V_{CCIO}/2$ – 0.2	—	$V_{CCIO}/2$+ 0.2	0.7	V_{CCIO}
SSTL-18 Class I, II	1.7	1.8	1.9	0.25	V_{CCIO}	$V_{CCIO}/2$ – 0.175	—	$V_{CCIO}/2$+ 0.175	0.5	V_{CCIO}
SSTL-15 Class I, II	1.425	1.5	1.575	0.2	—	$V_{CCIO}/2$ – 0.15	—	$V_{CCIO}/2$ + 0.15	$2(V_{IH(AC)} – V_{REF})$	$2(V_{IL(AC)} – V_{REF})$
SSTL-135	1.283	1.35	1.45	0.18	—	V_{REF} – 0.135	0.5 × V_{CCIO}	V_{REF} + 0.135	$2(V_{IH(AC)} – V_{REF})$	$2(V_{IL(AC)} – V_{REF})$

Differential HSTL and HSUL I/O Standards Specifications

Differential HSTL requires a V_{REF} input.

(18) The maximum value for $V_{SWING(DC)}$ is not defined. However, each single-ended signal needs to be within the respective single-ended limits ($V_{IH(DC)}$ and $V_{IL(DC)}$).

Table 24. Differential HSTL and HSUL I/O Standards Specifications for Intel MAX 10 Devices

I/O Standard	V_{CCIO} (V)			$V_{DIF(DC)}$ (V)		$V_{X(AC)}$ (V)			$V_{CM(DC)}$ (V)			$V_{DIF(AC)}$ (V)
	Min	Typ	Max	Min	Max	Min	Typ	Max	Min	Typ	Max	Min
HSTL-18 Class I, II	1.71	1.8	1.89	0.2	—	0.85	—	0.95	0.85	—	0.95	0.4
HSTL-15 Class I, II	1.425	1.5	1.575	0.2	—	0.71	—	0.79	0.71	—	0.79	0.4
HSTL-12 Class I, II	1.14	1.2	1.26	0.16	V_{CCIO}	0.48 × V_{CCIO}	0.5 × V_{CCIO}	0.52 × V_{CCIO}	0.48 × V_{CCIO}	0.5 × V_{CCIO}	0.52 × V_{CCIO}	0.3
HSUL-12	1.14	1.2	1.3	0.26	—	0.5 × V_{CCIO} − 0.12	0.5 × V_{CCIO}	0.5 × V_{CCIO} + 0.12	0.4 × V_{CCIO}	0.5 × V_{CCIO}	0.6 × V_{CCIO}	0.44

Differential I/O Standards Specifications

Table 25. Differential I/O Standards Specifications for Intel MAX 10 Devices

I/O Standard	V_{CCIO} (V)			V_{ID} (mV)		V_{ICM} (V) (19)			V_{OD} (mV) (20)(21)			V_{OS} (V) (20)		
	Min	Typ	Max	Min	Max	Min	Condition	Max	Min	Typ	Max	Min	Typ	Max
LVPECL (22)	2.375	2.5	2.625	100	—	0.05	D_{MAX} ≤ 500 Mbps	1.8	—	—	—	—	—	—
						0.55	500 Mbps ≤ D_{MAX} ≤ 700 Mbps	1.8						
						1.05	D_{MAX} > 700 Mbps	1.55						
LVDS	2.375	2.5	2.625	100	—	0.05	D_{MAX} ≤ 500 Mbps	1.8	247	—	600	1.125	1.25	1.375
						0.55	500 Mbps ≤ D_{MAX} ≤ 700 Mbps	1.8						

continued...

(19) V_{IN} range: 0 V ≤ V_{IN} ≤ 1.85 V.

(20) R_L range: 90 ≤ R_L ≤ 110 Ω.

(21) Low V_{OD} setting is only supported for RSDS standard.

(22) LVPECL input standard is only supported at clock input. Output standard is not supported.

I/O Standard	V_{CCIO} (V)			V_{ID} (mV)		V_{ICM} (V) (19)			V_{OD} (mV) (20)(21)			V_{OS} (V) (20)		
	Min	Typ	Max	Min	Max	Min	Condition	Max	Min	Typ	Max	Min	Typ	Max
						1.05	D_{MAX} > 700 Mbps	1.55						
BLVDS (23)	2.375	2.5	2.625	100	—	—	—	—	—	—	—	—	—	—
mini-LVDS (24)	2.375	2.5	2.625	—	—	—	—	—	300	—	600	1	1.2	1.4
RSDS (24)	2.375	2.5	2.625	—	—	—	—	—	100	200	600	0.5	1.2	1.5
PPDS (Row I/Os) (24)	2.375	2.5	2.625	—	—	—	—	—	100	200	600	0.5	1.2	1.4
TMDS(25)	2.375	2.5	2.625	100	—	0.05	D_{MAX} ≤ 500 Mbps	1.8	—	—	—	—	—	—
						0.55	500 Mbps ≤ D_{MAX} ≤ 700 Mbps	1.8						
						1.05	D_{MAX} > 700 Mbps	1.55						
Sub-LVDS (26)	1.71	1.8	1.89	100	—	0.55	—	1.25	(27)			0.8	0.9	1
SLVS	2.375	2.5	2.625	100	—	0.05	—	1.1	(27)			(28)		

continued...

(19) V_{IN} range: 0 V ≤ V_{IN} ≤ 1.85 V.
(20) R_L range: 90 ≤ R_L ≤ 110 Ω.
(21) Low V_{OD} setting is only supported for RSDS standard.

I/O Standard	V_{CCIO} (V)			V_{ID} (mV)		V_{ICM} (V) (19)			V_{OD} (mV) (20)(21)			V_{OS} (V) (20)		
	Min	Typ	Max	Min	Max	Min	Condition	Max	Min	Typ	Max	Min	Typ	Max
HiSpi	2.375	2.5	2.625	100	—	0.05	$D_{MAX} \leq$ 500 Mbps	1.8	—	—	—	—	—	—
						0.55	500 Mbps $\leq D_{MAX} \leq$ 700 Mbps	1.8						
						1.05	D_{MAX} > 700 Mbps	1.55						

Related Information

Intel MAX 10 LVDS SERDES I/O Standards Support, Intel MAX 10 High-Speed LVDS I/O User Guide
Provides the list of I/O standards supported in single supply and dual supply devices.

Switching Characteristics

This section provides the performance characteristics of Intel MAX 10 core and periphery blocks.

(19) V_{IN} range: 0 V ≤ V_{IN} ≤ 1.85 V.
(20) R_L range: 90 ≤ R_L ≤ 110 Ω.
(21) Low V_{OD} setting is only supported for RSDS standard.

(23) No fixed V_{IN} , V_{OD} , and V_{OS} specifications for Bus LVDS (BLVDS). They are dependent on the system topology.

(24) Mini-LVDS, RSDS, and Point-to-Point Differential Signaling (PPDS) standards are only supported at the output pins for Intel MAX 10 devices.

(25) Supported with requirement of an external level shift

(26) Sub-LVDS input buffer is using 2.5 V differential buffer.

(27) Differential output depends on the values of the external termination resistors.

(28) Differential output offset voltage depends on the values of the external termination resistors.

Core Performance Specifications

Clock Tree Specifications

Table 26. Clock Tree Specifications for Intel MAX 10 Devices

Device	Performance					Unit
	–I6	–A6, –C7	–I7	–A7	–C8	
10M02	450	416	416	382	402	MHz
10M04	450	416	416	382	402	MHz
10M08	450	416	416	382	402	MHz
10M16	450	416	416	382	402	MHz
10M25	450	416	416	382	402	MHz
10M40	450	416	416	382	402	MHz
10M50	450	416	416	382	402	MHz

PLL Specifications

Table 27. PLL Specifications for Intel MAX 10 Devices

V_{CCD_PLL} should always be connected to V_{CCINT} through decoupling capacitor and ferrite bead.

Symbol	Parameter	Condition	Min	Typ	Max	Unit
f_{IN} (29)	Input clock frequency	—	5	—	472.5	MHz
f_{INPFD}	Phase frequency detector (PFD) input frequency	—	5	—	325	MHz

continued...

(29) This parameter is limited in the Intel Quartus Prime software by the I/O maximum frequency. The maximum I/O frequency is different for each I/O standard.

Symbol	Parameter	Condition	Min	Typ	Max	Unit
f_{VCO} (30)	PLL internal voltage-controlled oscillator (VCO) operating range	—	600	—	1300	MHz
f_{INDUTY}	Input clock duty cycle	—	40	—	60	%
$t_{INJITTER_CCJ}$ (31)	Input clock cycle-to-cycle jitter	$F_{INPFD} \geq 100$ MHz	—	—	0.15	UI
		$F_{INPFD} < 100$ MHz	—	—	±750	ps
f_{OUT_EXT} (29)	PLL output frequency for external clock output	—	—	—	472.5	MHz
f_{OUT}	PLL output frequency to global clock	–6 speed grade	—	—	472.5	MHz
		–7 speed grade	—	—	450	MHz
		–8 speed grade	—	—	402.5	MHz
$t_{OUTDUTY}$	Duty cycle for external clock output	Duty cycle set to 50%	45	50	55	%
t_{LOCK}	Time required to lock from end of device configuration	—	—	—	1	ms
t_{DLOCK}	Time required to lock dynamically	After switchover, reconfiguring any non-post-scale counters or delays, or when `areset` is deasserted	—	—	1	ms
$t_{OUTJITTER_PERIOD_IO}$ (32)	Regular I/O period jitter	$F_{OUT} \geq 100$ MHz	—	—	650	ps
		$F_{OUT} < 100$ MHz	—	—	75	mUI
$t_{OUTJITTER_CCJ_IO}$ (32)	Regular I/O cycle-to-cycle jitter	$F_{OUT} \geq 100$ MHz	—	—	650	ps
		$F_{OUT} < 100$ MHz	—	—	75	mUI

continued...

(30) The VCO frequency reported by the Intel Quartus Prime software in the PLL summary section of the compilation report takes into consideration the VCO post-scale counter K value. Therefore, if the counter K has a value of 2, the frequency reported can be lower than the f_{VCO} specification.

(31) A high input jitter directly affects the PLL output jitter. To have low PLL output clock jitter, you must provide a clean clock source, which is less than 200 ps.

(32) Peak-to-peak jitter with a probability level of 10^{-12} (14 sigma, 99.99999999974404% confidence level). The output jitter specification applies to the intrinsic jitter of the PLL, when an input jitter of 30 ps is applied.

Symbol	Parameter	Condition	Min	Typ	Max	Unit
t_{PLL_PSERR}	Accuracy of PLL phase shift	—	—	—	±50	ps
t_{ARESET}	Minimum pulse width on areset signal.	—	10	—	—	ns
$t_{CONFIGPLL}$	Time required to reconfigure scan chains for PLLs	—	—	3.5 (33)	—	SCANCLK cycles
$f_{SCANCLK}$	`scanclk` frequency	—	—	—	100	MHz

Table 28. PLL Specifications for Intel MAX 10 Single Supply Devices

For V36 package, the PLL specification is based on single supply devices.

Symbol	Parameter	Condition	Max	Unit
$t_{OUTJITTER_PERIOD_DEDCLK}$ (32)	Dedicated clock output period jitter	$F_{OUT} \geq 100$ MHz	660	ps
		$F_{OUT} < 100$ MHz	66	mUI
$t_{OUTJITTER_CCJ_DEDCLK}$ (32)	Dedicated clock output cycle-to-cycle jitter	$F_{OUT} \geq 100$ MHz	660	ps
		$F_{OUT} < 100$ MHz	66	mUI

Table 29. PLL Specifications for Intel MAX 10 Dual Supply Devices

Symbol	Parameter	Condition	Max	Unit
$t_{OUTJITTER_PERIOD_DEDCLK}$ (32)	Dedicated clock output period jitter	$F_{OUT} \geq 100$ MHz	300	ps
		$F_{OUT} < 100$ MHz	30	mUI
$t_{OUTJITTER_CCJ_DEDCLK}$ (32)	Dedicated clock output cycle-to-cycle jitter	$F_{OUT} \geq 100$ MHz	300	ps
		$F_{OUT} < 100$ MHz	30	mUI

(33) With 100 MHz `scanclk` frequency.

Embedded Multiplier Specifications

Table 30. Embedded Multiplier Specifications for Intel MAX 10 Devices

Mode	Number of Multipliers	Power Supply Mode	Performance			Unit
			–I6	–A6, –C7, –I7, –A7	–C8	
9 × 9-bit multiplier	1	Single supply mode	198	183	160	MHz
		Dual supply mode	310	260	210	MHz
18 × 18-bit multiplier	1	Single supply mode	198	183	160	MHz
		Dual supply mode	265	240	190	MHz

Memory Block Performance Specifications

Table 31. Memory Block Performance Specifications for Intel MAX 10 Devices

Memory	Mode	Resources Used		Power Supply Mode	Performance			Unit
		LEs	M9K Memory		–I6	–A6, –C7, –I7, –A7	–C8	
M9K Block	FIFO 256 × 36	47	1	Single supply mode	232	219	204	MHz
				Dual supply mode	330	300	250	MHz
	Single-port 256 × 36	0	1	Single supply mode	232	219	204	MHz
				Dual supply mode	330	300	250	MHz
	Simple dual-port 256 × 36 CLK	0	1	Single supply mode	232	219	204	MHz
				Dual supply mode	330	300	250	MHz
	True dual port 512 × 18 single CLK	0	1	Single supply mode	232	219	204	MHz
				Dual supply mode	330	300	250	MHz

Internal Oscillator Specifications

Table 32. Internal Oscillator Frequencies for Intel MAX 10 Devices

You can access to the internal oscillator frequencies in this table. The duty cycle of internal oscillator is approximately 45%–55%.

Device	Frequency			Unit
	Minimum	Typical	Maximum	
10M02	55	82	116	MHz
10M04				
10M08				
10M16				
10M25				
10M40	35	52	77	MHz
10M50				

UFM Performance Specifications

Table 33. UFM Performance Specifications for Intel MAX 10 Devices

Block	Mode	Interface	Device	Frequency		Unit
				Minimum	Maximum	
UFM	Avalon®-MM slave	Parallel [34]	10M02 [35]	3.43	7.25	MHz
			10M04, 10M08, 10M16, 10M25, 10M40, 10M50	5	116	MHz
		Serial [35]	10M02, 10M04, 10M08, 10M16, 10M25	3.43	7.25	MHz
			10M40, 10M50	2.18	4.81	MHz

(34) Clock source is derived from user, except for 10M02 device.

(35) Clock source is derived from 1/16 of the frequency of the internal oscillator.

ADC Performance Specifications

Single Supply Devices ADC Performance Specifications

Table 34. ADC Performance Specifications for Intel MAX 10 Single Supply Devices

Parameter		Symbol	Condition	Min	Typ	Max	Unit
ADC resolution		—	—	—	—	12	bits
ADC supply voltage		V_{CC_ONE}	—	2.85	3.0/3.3	3.465	V
External reference voltage		V_{REF}	—	V_{CC_ONE} – 0.5	—	V_{CC_ONE}	V
Sampling rate		F_S	Accumulative sampling rate	—	—	1	MSPS
Operating junction temperature range		T_J	—	–40	25	125	°C
Analog input voltage		V_{IN}	Prescalar disabled	0	—	V_{REF}	V
			Prescalar enabled (36)	0	—	3.6	V
Input resistance		R_{IN}	—	—	(37)	—	—
Input capacitance		C_{IN}	—	—	(37)	—	—
DC Accuracy	Offset error and drift	E_{offset}	Prescalar disabled	–0.2	—	0.2	%FS
			Prescalar enabled	–0.5	—	0.5	%FS
	Gain error and drift	E_{gain}	Prescalar disabled	–0.5	—	0.5	%FS
			Prescalar enabled	–0.75	—	0.75	%FS
	Differential non linearity	DNL	External V_{REF}, no missing code	–0.9	—	0.9	LSB
			Internal V_{REF}, no missing code	–1	—	1.7	LSB

continued...

(36) Prescalar function divides the analog input voltage by half. The analog input handles up to 3.6 V for the Intel MAX 10 single supply devices.

(37) Download the SPICE models for simulation.

10M16SCE144I7G Intel IC FPGA 101 I/O 144EQFP

Parameter		Symbol	Condition	Min	Typ	Max	Unit
	Integral non linearity	INL	—	–2	—	2	LSB
AC Accuracy	Total harmonic distortion	THD	F_{IN} = 50 kHz, F_S = 1 MHz, PLL	–65 (38)	—	—	dB
	Signal-to-noise ratio	SNR	F_{IN} = 50 kHz, F_S = 1 MHz, PLL	54 (39)	—	—	dB
	Signal-to-noise and distortion	SINAD	F_{IN} = 50 kHz, F_S = 1 MHz, PLL	53 (40)	—	—	dB
On-Chip Temperature Sensor	Temperature sampling rate	T_S	—	—	—	50	kSPS
	Absolute accuracy	—	–40 to 125°C, with 64 samples averaging (41)	—	—	±10	°C
Conversion Rate (42)	Conversion time	—	Single measurement	—	—	1	Cycle
			Continuous measurement	—	—	1	Cycle
			Temperature measurement	—	—	1	Cycle

Related Information

SPICE Models for Intel FPGAs

(38) THD with prescalar enabled is 6dB less than the specification.

(39) SNR with prescalar enabled is 6dB less than the specification.

(40) SINAD with prescalar enabled is 6dB less than the specification.

(41) For the Intel Quartus Prime software version 15.0 and later, Modular ADC Core Intel FPGA IP and Modular Dual ADC Core Intel FPGA IP cores handle the 64 samples averaging. For the Intel Quartus Prime software versions prior to 14.1, you need to implement your own averaging calculation.

(42) For more detailed description, refer to the Timing section in the *Intel MAX 10 Analog-to-Digital Converter User Guide*.

Dual Supply Devices ADC Performance Specifications

Table 35. ADC Performance Specifications for Intel MAX 10 Dual Supply Devices

Parameter		Symbol	Condition	Min	Typ	Max	Unit
ADC resolution		—	—	—	—	12	bits
Analog supply voltage		V_{CCA_ADC}	—	2.375	2.5	2.625	V
Digital supply voltage		V_{CCINT}	—	1.15	1.2	1.25	V
External reference voltage		V_{REF}	—	V_{CCA_ADC} – 0.5	—	V_{CCA_ADC}	V
Sampling rate		F_S	Accumulative sampling rate	—	—	1	MSPS
Operating junction temperature range		T_J	—	–40	25	125	°C
Analog input voltage		V_{IN}	Prescalar disabled	0	—	V_{REF}	V
			Prescalar enabled (43)	0	—	3	V
Analog supply current (DC)		I_{ACC_ADC}	Average current	—	275	450	µA
Digital supply current (DC)		I_{CCINT}	Average current	—	65	150	µA
Input resistance		R_{IN}	—	—	(44)	—	—
Input capacitance		C_{IN}	—	—	(44)	—	—
DC Accuracy	Offset error and drift	E_{offset}	Prescalar disabled	–0.2	—	0.2	%FS
			Prescalar enabled	–0.5	—	0.5	%FS
	Gain error and drift	E_{gain}	Prescalar disabled	–0.5	—	0.5	%FS
			Prescalar enabled	–0.75	—	0.75	%FS
	Differential non linearity	DNL	External V_{REF}, no missing code	–0.9	—	0.9	LSB

continued...

(43) Prescalar function divides the analog input voltage by half. The analog input handles up to 3 V input for the Intel MAX 10 dual supply devices.

(44) Download the SPICE models for simulation.

Parameter		Symbol	Condition	Min	Typ	Max	Unit
			Internal V_{REF}, no missing code	–1	—	1.7	LSB
	Integral non linearity	INL	—	–2	—	2	LSB
AC Accuracy	Total harmonic distortion	THD	F_{IN} = 50 kHz, F_S = 1 MHz, PLL	–70 (45)(46)(47)	—	—	dB
	Signal-to-noise ratio	SNR	F_{IN} = 50 kHz, F_S = 1 MHz, PLL	62 (48)(49)(47)	—	—	dB
	Signal-to-noise and distortion	SINAD	F_{IN} = 50 kHz, F_S = 1 MHz, PLL	61.5 (50)(51)(47)	—	—	dB
On-Chip Temperature Sensor	Temperature sampling rate	T_S	—	—	—	50	kSPS
	Absolute accuracy	—	–40 to 125°C, with 64 samples averaging (52)	—	—	±5	°C

continued...

(45) Total harmonic distortion is –65 dB for dual function pin.

(46) THD with prescalar enabled is 6dB less than the specification.

(47) When using internal V_{REF}, THD = 66 dB, SNR = 58 dB and SINAD = 57.5 dB for dedicated ADC input channels.

(48) Signal-to-noise ratio is 54 dB for dual function pin.

(49) SNR with prescalar enabled is 6dB less than the specification.

(50) Signal-to-noise and distortion is 53 dB for dual function pin.

(51) SINAD with prescalar enabled is 6dB less than the specification.

(52) For the Intel Quartus Prime software version 15.0 and later, Modular ADC Core and Modular Dual ADC Core IP cores handle the 64 samples averaging. For the Intel Quartus Prime software versions prior to 14.1, you need to implement your own averaging calculation.

Parameter		Symbol	Condition	Min	Typ	Max	Unit
Conversion Rate [53]	Conversion time	—	Single measurement	—	—	1	Cycle
			Continuous measurement	—	—	1	Cycle
			Temperature measurement	—	—	1	Cycle

Related Information

SPICE Models for Intel FPGAs

Periphery Performance Specifications

This section describes the periphery performance, high-speed I/O, and external memory interface.

Actual achievable frequency depends on design and system specific factors. Ensure proper timing closure in your design and perform HSPICE/IBIS simulations based on your specific design and system setup to determine the maximum achievable frequency in your system.

High-Speed I/O Specifications

For more information about the high-speed and low-speed I/O performance pins, refer to the respective device pin-out files.

Related Information

Documentation: Pin-Out Files for Intel FPGAs

(53) For more detailed description, refer to the Timing section in the *Intel MAX 10 Analog-to-Digital Converter User Guide*.

True PPDS and Emulated PPDS_E_3R Transmitter Timing Specifications

Table 36. True PPDS and Emulated PPDS_E_3R Transmitter Timing Specifications for Intel MAX 10 Dual Supply Devices

True **PPDS** transmitter is only supported at bottom I/O banks. Emulated **PPDS** transmitter is supported at the output pin of all I/O banks.

Symbol	Parameter	Mode	–I6, –A6, –C7, –I7			–A7			–C8			Unit
			Min	Typ	Max	Min	Typ	Max	Min	Typ	Max	
f_{HSCLK}	Input clock frequency (high-speed I/O performance pin)	×10	5	—	155	5	—	155	5	—	155	MHz
		×8	5	—	155	5	—	155	5	—	155	MHz
		×7	5	—	155	5	—	155	5	—	155	MHz
		×4	5	—	155	5	—	155	5	—	155	MHz
		×2	5	—	155	5	—	155	5	—	155	MHz
		×1	5	—	310	5	—	310	5	—	310	MHz
HSIODR	Data rate (high-speed I/O performance pin)	×10	100	—	310	100	—	310	100	—	310	Mbps
		×8	80	—	310	80	—	310	80	—	310	Mbps
		×7	70	—	310	70	—	310	70	—	310	Mbps
		×4	40	—	310	40	—	310	40	—	310	Mbps
		×2	20	—	310	20	—	310	20	—	310	Mbps
		×1	10	—	310	10	—	310	10	—	310	Mbps
f_{HSCLK}	Input clock frequency (low-speed I/O performance pin)	×10	5	—	150	5	—	150	5	—	150	MHz
		×8	5	—	150	5	—	150	5	—	150	MHz
		×7	5	—	150	5	—	150	5	—	150	MHz
		×4	5	—	150	5	—	150	5	—	150	MHz
		×2	5	—	150	5	—	150	5	—	150	MHz
		×1	5	—	300	5	—	300	5	—	300	MHz
HSIODR	Data rate (low-speed I/O performance pin)	×10	100	—	300	100	—	300	100	—	300	Mbps
		×8	80	—	300	80	—	300	80	—	300	Mbps
		×7	70	—	300	70	—	300	70	—	300	Mbps

continued...

Symbol	Parameter	Mode	–I6, –A6, –C7, –I7			–A7			–C8			Unit
			Min	Typ	Max	Min	Typ	Max	Min	Typ	Max	
		×4	40	—	300	40	—	300	40	—	300	Mbps
		×2	20	—	300	20	—	300	20	—	300	Mbps
		×1	10	—	300	10	—	300	10	—	300	Mbps
t_{DUTY}	Duty cycle on transmitter output clock	—	45	—	55	45	—	55	45	—	55	%
TCCS[54]	Transmitter channel-to-channel skew	—	—	—	300	—	—	300	—	—	300	ps
$t_{x\ Jitter}$[55]	Output jitter (high-speed I/O performance pin)	—	—	—	425	—	—	425	—	—	425	ps
	Output jitter (low-speed I/O performance pin)	—	—	—	470	—	—	470	—	—	470	ps
t_{RISE}	Rise time	20 – 80%, C_{LOAD} = 5 pF	—	500	—	—	500	—	—	500	—	ps
t_{FALL}	Fall time	20 – 80%, C_{LOAD} = 5 pF	—	500	—	—	500	—	—	500	—	ps
t_{LOCK}	Time required for the PLL to lock, after `CONF_DONE` signal goes high, indicating the completion of device configuration	—	—	—	1	—	—	1	—	—	1	ms

(54) TCCS specifications apply to I/O banks from the same side only.

(55) TX jitter is the jitter induced from core noise and I/O switching noise.

True RSDS and Emulated RSDS_E_3R Transmitter Timing Specifications

Single Supply Devices True RSDS and Emulated RSDS_E_3R Transmitter Timing Specifications

Table 37. True RSDS and Emulated RSDS_E_3R Transmitter Timing Specifications for Intel MAX 10 Single Supply Devices

True **RSDS** transmitter is only supported at bottom I/O banks. Emulated **RSDS** transmitter is supported at the output pin of all I/O banks.

Symbol	Parameter	Mode	–I6, –A6, –C7, –I7			–A7			–C8			Unit
			Min	Typ	Max	Min	Typ	Max	Min	Typ	Max	
f_{HSCLK}	Input clock frequency (high-speed I/O performance pin)	×10	5	—	50	5	—	50	5	—	50	MHz
		×8	5	—	50	5	—	50	5	—	50	MHz
		×7	5	—	50	5	—	50	5	—	50	MHz
		×4	5	—	50	5	—	50	5	—	50	MHz
		×2	5	—	50	5	—	50	5	—	50	MHz
		×1	5	—	100	5	—	100	5	—	100	MHz
HSIODR	Data rate (high-speed I/O performance pin)	×10	100	—	100	100	—	100	100	—	100	Mbps
		×8	80	—	100	80	—	100	80	—	100	Mbps
		×7	70	—	100	70	—	100	70	—	100	Mbps
		×4	40	—	100	40	—	100	40	—	100	Mbps
		×2	20	—	100	20	—	100	20	—	100	Mbps
		×1	10	—	100	10	—	100	10	—	100	Mbps
f_{HSCLK}	Input clock frequency (low-speed I/O performance pin)	×10	5	—	50	5	—	50	5	—	50	MHz
		×8	5	—	50	5	—	50	5	—	50	MHz
		×7	5	—	50	5	—	50	5	—	50	MHz
		×4	5	—	50	5	—	50	5	—	50	MHz
		×2	5	—	50	5	—	50	5	—	50	MHz
		×1	5	—	100	5	—	100	5	—	100	MHz
HSIODR	Data rate (low-speed I/O performance pin)	×10	100	—	100	100	—	100	100	—	100	Mbps

continued...

Symbol	Parameter	Mode	–I6, –A6, –C7, –I7			–A7			–C8			Unit
			Min	Typ	Max	Min	Typ	Max	Min	Typ	Max	
		×8	80	—	100	80	—	100	80	—	100	Mbps
		×7	70	—	100	70	—	100	70	—	100	Mbps
		×4	40	—	100	40	—	100	40	—	100	Mbps
		×2	20	—	100	20	—	100	20	—	100	Mbps
		×1	10	—	100	10	—	100	10	—	100	Mbps
t_{DUTY}	Duty cycle on transmitter output clock	—	45	—	55	45	—	55	45	—	55	%
TCCS[56]	Transmitter channel-to-channel skew	—	—	—	300	—	—	300	—	—	300	ps
$t_{x\ Jitter}$[57]	Output jitter (high-speed I/O performance pin)	—	—	—	425	—	—	425	—	—	425	ps
	Output jitter (low-speed I/O performance pin)	—	—	—	470	—	—	470	—	—	470	ps
t_{RISE}	Rise time	20 – 80%, C_{LOAD} = 5 pF	—	500	—	—	500	—	—	500	—	ps
t_{FALL}	Fall time	20 – 80%, C_{LOAD} = 5 pF	—	500	—	—	500	—	—	500	—	ps
t_{LOCK}	Time required for the PLL to lock, after `CONF_DONE` signal goes high, indicating the completion of device configuration	—	—	—	1	—	—	1	—	—	1	ms

(56) TCCS specifications apply to I/O banks from the same side only.

(57) TX jitter is the jitter induced from core noise and I/O switching noise.

Dual Supply Devices True RSDS and Emulated RSDS_E_3R Transmitter Timing Specifications

Table 38. True RSDS and Emulated RSDS_E_3R Transmitter Timing Specifications for Intel MAX 10 Dual Supply Devices

True **RSDS** transmitter is only supported at bottom I/O banks. Emulated **RSDS** transmitter is supported at the output pin of all I/O banks.

Symbol	Parameter	Mode	–I6, –A6, –C7, –I7			–A7			–C8			Unit
			Min	Typ	Max	Min	Typ	Max	Min	Typ	Max	
f_{HSCLK}	Input clock frequency (high-speed I/O performance pin)	×10	5	—	155	5	—	155	5	—	155	MHz
		×8	5	—	155	5	—	155	5	—	155	MHz
		×7	5	—	155	5	—	155	5	—	155	MHz
		×4	5	—	155	5	—	155	5	—	155	MHz
		×2	5	—	155	5	—	155	5	—	155	MHz
		×1	5	—	310	5	—	310	5	—	310	MHz
HSIODR	Data rate (high-speed I/O performance pin)	×10	100	—	310	100	—	310	100	—	310	Mbps
		×8	80	—	310	80	—	310	80	—	310	Mbps
		×7	70	—	310	70	—	310	70	—	310	Mbps
		×4	40	—	310	40	—	310	40	—	310	Mbps
		×2	20	—	310	20	—	310	20	—	310	Mbps
		×1	10	—	310	10	—	310	10	—	310	Mbps
f_{HSCLK}	Input clock frequency (low-speed I/O performance pin)	×10	5	—	150	5	—	150	5	—	150	MHz
		×8	5	—	150	5	—	150	5	—	150	MHz
		×7	5	—	150	5	—	150	5	—	150	MHz
		×4	5	—	150	5	—	150	5	—	150	MHz
		×2	5	—	150	5	—	150	5	—	150	MHz
		×1	5	—	300	5	—	300	5	—	300	MHz
HSIODR	Data rate (low-speed I/O performance pin)	×10	100	—	300	100	—	300	100	—	300	Mbps
		×8	80	—	300	80	—	300	80	—	300	Mbps
		×7	70	—	300	70	—	300	70	—	300	Mbps

continued...

Symbol	Parameter	Mode	–I6, –A6, –C7, –I7			–A7			–C8			Unit
			Min	Typ	Max	Min	Typ	Max	Min	Typ	Max	
		×4	40	—	300	40	—	300	40	—	300	Mbps
		×2	20	—	300	20	—	300	20	—	300	Mbps
		×1	10	—	300	10	—	300	10	—	300	Mbps
t_{DUTY}	Duty cycle on transmitter output clock	—	45	—	55	45	—	55	45	—	55	%
TCCS[58]	Transmitter channel-to-channel skew	—	—	—	300	—	—	300	—	—	300	ps
$t_{x\ Jitter}$[59]	Output jitter (high-speed I/O performance pin)	—	—	—	425	—	—	425	—	—	425	ps
	Output jitter (low-speed I/O performance pin)	—	—	—	470	—	—	470	—	—	470	ps
t_{RISE}	Rise time	20 – 80%, C_{LOAD} = 5 pF	—	500	—	—	500	—	—	500	—	ps
t_{FALL}	Fall time	20 – 80%, C_{LOAD} = 5 pF	—	500	—	—	500	—	—	500	—	ps
t_{LOCK}	Time required for the PLL to lock, after `CONF_DONE` signal goes high, indicating the completion of device configuration	—	—	—	1	—	—	1	—	—	1	ms

(58) TCCS specifications apply to I/O banks from the same side only.

(59) TX jitter is the jitter induced from core noise and I/O switching noise.

Emulated RSDS_E_1R Transmitter Timing Specifications

Table 39. Emulated RSDS_E_1R Transmitter Timing Specifications for Intel MAX 10 Dual Supply Devices

Emulated **RSDS_E_1R** transmitter is supported at the output pin of all I/O banks.

Symbol	Parameter	Mode	–I6, –A6, –C7, –I7			–A7			–C8			Unit
			Min	Typ	Max	Min	Typ	Max	Min	Typ	Max	
f_{HSCLK}	Input clock frequency (high-speed I/O performance pin)	×10	5	—	85	5	—	85	5	—	85	MHz
		×8	5	—	85	5	—	85	5	—	85	MHz
		×7	5	—	85	5	—	85	5	—	85	MHz
		×4	5	—	85	5	—	85	5	—	85	MHz
		×2	5	—	85	5	—	85	5	—	85	MHz
		×1	5	—	170	5	—	170	5	—	170	MHz
HSIODR	Data rate (high-speed I/O performance pin)	×10	100	—	170	100	—	170	100	—	170	Mbps
		×8	80	—	170	80	—	170	80	—	170	Mbps
		×7	70	—	170	70	—	170	70	—	170	Mbps
		×4	40	—	170	40	—	170	40	—	170	Mbps
		×2	20	—	170	20	—	170	20	—	170	Mbps
		×1	10	—	170	10	—	170	10	—	170	Mbps
f_{HSCLK}	Input clock frequency (low-speed I/O performance pin)	×10	5	—	85	5	—	85	5	—	85	MHz
		×8	5	—	85	5	—	85	5	—	85	MHz
		×7	5	—	85	5	—	85	5	—	85	MHz
		×4	5	—	85	5	—	85	5	—	85	MHz
		×2	5	—	85	5	—	85	5	—	85	MHz
		×1	5	—	170	5	—	170	5	—	170	MHz
HSIODR	Data rate (low-speed I/O performance pin)	×10	100	—	170	100	—	170	100	—	170	Mbps
		×8	80	—	170	80	—	170	80	—	170	Mbps
		×7	70	—	170	70	—	170	70	—	170	Mbps

continued...

Symbol	Parameter	Mode	–I6, –A6, –C7, –I7			–A7			–C8			Unit
			Min	Typ	Max	Min	Typ	Max	Min	Typ	Max	
		×4	40	—	170	40	—	170	40	—	170	Mbps
		×2	20	—	170	20	—	170	20	—	170	Mbps
		×1	10	—	170	10	—	170	10	—	170	Mbps
t_{DUTY}	Duty cycle on transmitter output clock	—	45	—	55	45	—	55	45	—	55	%
TCCS[60]	Transmitter channel-to-channel skew	—	—	—	300	—	—	300	—	—	300	ps
$t_{x\ Jitter}$[61]	Output jitter (high-speed I/O performance pin)	—	—	—	425	—	—	425	—	—	425	ps
	Output jitter (low-speed I/O performance pin)	—	—	—	470	—	—	470	—	—	470	ps
t_{RISE}	Rise time	20 – 80%, C_{LOAD} = 5 pF	—	500	—	—	500	—	—	500	—	ps
t_{FALL}	Fall time	20 – 80%, C_{LOAD} = 5 pF	—	500	—	—	500	—	—	500	—	ps
t_{LOCK}	Time required for the PLL to lock, after `CONF_DONE` signal goes high, indicating the completion of device configuration	—	—	—	1	—	—	1	—	—	1	ms

(60) TCCS specifications apply to I/O banks from the same side only.

(61) TX jitter is the jitter induced from core noise and I/O switching noise.

True Mini-LVDS and Emulated Mini-LVDS_E_3R Transmitter Timing Specifications

Table 40. True Mini-LVDS and Emulated Mini-LVDS_E_3R Transmitter Timing Specifications for Intel MAX 10 Dual Supply Devices

True **mini-LVDS** transmitter is only supported at the bottom I/O banks. Emulated **mini-LVDS_E_3R** transmitter is supported at the output pin of all I/O banks.

Symbol	Parameter	Mode	–I6, –A6, –C7, –I7			–A7			–C8			Unit
			Min	Typ	Max	Min	Typ	Max	Min	Typ	Max	
f_{HSCLK}	Input clock frequency (high-speed I/O performance pin)	×10	5	—	155	5	—	155	5	—	155	MHz
		×8	5	—	155	5	—	155	5	—	155	MHz
		×7	5	—	155	5	—	155	5	—	155	MHz
		×4	5	—	155	5	—	155	5	—	155	MHz
		×2	5	—	155	5	—	155	5	—	155	MHz
		×1	5	—	310	5	—	310	5	—	310	MHz
HSIODR	Data rate (high-speed I/O performance pin)	×10	100	—	310	100	—	310	100	—	310	Mbps
		×8	80	—	310	80	—	310	80	—	310	Mbps
		×7	70	—	310	70	—	310	70	—	310	Mbps
		×4	40	—	310	40	—	310	40	—	310	Mbps
		×2	20	—	310	20	—	310	20	—	310	Mbps
		×1	10	—	310	10	—	310	10	—	310	Mbps
f_{HSCLK}	Input clock frequency (low-speed I/O performance pin)	×10	5	—	150	5	—	150	5	—	150	MHz
		×8	5	—	150	5	—	150	5	—	150	MHz
		×7	5	—	150	5	—	150	5	—	150	MHz
		×4	5	—	150	5	—	150	5	—	150	MHz
		×2	5	—	150	5	—	150	5	—	150	MHz
		×1	5	—	300	5	—	300	5	—	300	MHz
HSIODR	Data rate (low-speed I/O performance pin)	×10	100	—	300	100	—	300	100	—	300	Mbps
		×8	80	—	300	80	—	300	80	—	300	Mbps

continued...

Symbol	Parameter	Mode	–I6, –A6, –C7, –I7			–A7			–C8			Unit
			Min	Typ	Max	Min	Typ	Max	Min	Typ	Max	
		×7	70	—	300	70	—	300	70	—	300	Mbps
		×4	40	—	300	40	—	300	40	—	300	Mbps
		×2	20	—	300	20	—	300	20	—	300	Mbps
		×1	10	—	300	10	—	300	10	—	300	Mbps
t_{DUTY}	Duty cycle on transmitter output clock	—	45	—	55	45	—	55	45	—	55	%
TCCS[62]	Transmitter channel-to-channel skew	—	—	—	300	—	—	300	—	—	300	ps
$t_{x\ Jitter}$[63]	Output jitter (high-speed I/O performance pin)	—	—	—	425	—	—	425	—	—	425	ps
	Output jitter (low-speed I/O performance pin)	—	—	—	470	—	—	470	—	—	470	ps
t_{RISE}	Rise time	20 – 80%, C_{LOAD} = 5 pF	—	500	—	—	500	—	—	500	—	ps
t_{FALL}	Fall time	20 – 80%, C_{LOAD} = 5 pF	—	500	—	—	500	—	—	500	—	ps
t_{LOCK}	Time required for the PLL to lock, after `CONF_DONE` signal goes high, indicating the completion of device configuration	—	—	—	1	—	—	1	—	—	1	ms

(62) TCCS specifications apply to I/O banks from the same side only.

(63) TX jitter is the jitter induced from core noise and I/O switching noise.

True LVDS Transmitter Timing

Single Supply Devices True LVDS Transmitter Timing Specifications

Table 41. True LVDS Transmitter Timing Specifications for Intel MAX 10 Single Supply Devices

True **LVDS** transmitter is only supported at the bottom I/O banks.

Symbol	Parameter	Mode	–C7, –I7			–A7			–C8			Unit
			Min	Typ	Max	Min	Typ	Max	Min	Typ	Max	
f_{HSCLK}	Input clock frequency	×10	5	—	145	5	—	100	5	—	100	MHz
		×8	5	—	145	5	—	100	5	—	100	MHz
		×7	5	—	145	5	—	100	5	—	100	MHz
		×4	5	—	145	5	—	100	5	—	100	MHz
		×2	5	—	145	5	—	100	5	—	100	MHz
		×1	5	—	290	5	—	200	5	—	200	MHz
HSIODR	Data rate	×10	100	—	290	100	—	200	100	—	200	Mbps
		×8	80	—	290	80	—	200	80	—	200	Mbps
		×7	70	—	290	70	—	200	70	—	200	Mbps
		×4	40	—	290	40	—	200	40	—	200	Mbps
		×2	20	—	290	20	—	200	20	—	200	Mbps
		×1	10	—	290	10	—	200	10	—	200	Mbps
t_{DUTY}	Duty cycle on transmitter output clock	—	45	—	55	45	—	55	45	—	55	%
TCCS[64]	Transmitter channel-to-channel skew	—	—	—	300	—	—	300	—	—	300	ps
$t_{x\ Jitter}$[65]	Output jitter	—	—	—	1,000	—	—	1,000	—	—	1,000	ps

continued...

(64) TCCS specifications apply to I/O banks from the same side only.

(65) TX jitter is the jitter induced from core noise and I/O switching noise.

Symbol	Parameter	Mode	–C7, –I7			–A7			–C8			Unit
			Min	Typ	Max	Min	Typ	Max	Min	Typ	Max	
t_{RISE}	Rise time	20 – 80%, C_{LOAD} = 5 pF	—	500	—	—	500	—	—	500	—	ps
t_{FALL}	Fall time	20 – 80%, C_{LOAD} = 5 pF	—	500	—	—	500	—	—	500	—	ps
t_{LOCK}	Time required for the PLL to lock, after CONF_DONE signal goes high, indicating the completion of device configuration	—	—	—	1	—	—	1	—	—	1	ms

Dual Supply Devices True LVDS Transmitter Timing Specifications

Table 42. True LVDS Transmitter Timing Specifications for Intel MAX 10 Dual Supply Devices

True **LVDS** transmitter is only supported at the bottom I/O banks.

Symbol	Parameter	Mode	–I6			–A6, –C7, –I7			–A7			–C8			Unit
			Min	Typ	Max	Min	Typ	Max	Min	Typ	Max	Min	Typ	Max	
f_{HSCLK}	Input clock frequency	×10	5	—	360	5	—	340	5	—	310	5	—	300	MHz
		×8	5	—	360	5	—	360	5	—	320	5	—	320	MHz
		×7	5	—	360	5	—	340	5	—	310	5	—	300	MHz
		×4	5	—	360	5	—	350	5	—	320	5	—	320	MHz
		×2	5	—	360	5	—	350	5	—	320	5	—	320	MHz
		×1	5	—	360	5	—	350	5	—	320	5	—	320	MHz
HSIODR	Data rate	×10	100	—	720	100	—	680	100	—	620	100	—	600	Mbps
		×8	80	—	720	80	—	720	80	—	640	80	—	640	Mbps
		×7	70	—	720	70	—	680	70	—	620	70	—	600	Mbps
		×4	40	—	720	40	—	700	40	—	640	40	—	640	Mbps
		×2	20	—	720	20	—	700	20	—	640	20	—	640	Mbps

continued...

10M16SCE144I7G Intel IC FPGA 101 I/O 144EQFP

Symbol	Parameter	Mode	–I6			–A6, –C7, –I7			–A7			–C8			Unit
			Min	Typ	Max	Min	Typ	Max	Min	Typ	Max	Min	Typ	Max	
		×1	10	—	360	10	—	350	10	—	320	10	—	320	Mbps
t_{DUTY}	Duty cycle on transmitter output clock	—	45	—	55	45	—	55	45	—	55	45	—	55	%
TCCS(66)	Transmitter channel-to-channel skew	—	—	—	300	—	—	300	—	—	300	—	—	300	ps
$t_{x\ Jitter}$(67)	Output jitter	—	—	—	380	—	—	380	—	—	380	—	—	380	ps
t_{RISE}	Rise time	20 – 80%, C_{LOAD} = 5 pF	—	500	—	—	500	—	—	500	—	—	500	—	ps
t_{FALL}	Fall time	20 – 80%, C_{LOAD} = 5 pF	—	500	—	—	500	—	—	500	—	—	500	—	ps
t_{LOCK}	Time required for the PLL to lock, after CONF_DONE signal goes high, indicating the completion of device configuration	—	—	—	1	—	—	1	—	—	1	—	—	1	ms

(66) TCCS specifications apply to I/O banks from the same side only.

(67) TX jitter is the jitter induced from core noise and I/O switching noise.

Emulated LVDS_E_3R, SLVS, and Sub-LVDS Transmitter Timing Specifications

Single Supply Devices Emulated LVDS_E_3R Transmitter Timing Specifications

Table 43. Emulated LVDS_E_3R Transmitter Timing Specifications for Intel MAX 10 Single Supply Devices

Emulated **LVDS_E_3R** transmitters are supported at the output pin of all I/O banks.

Symbol	Parameter	Mode	–C7, –I7			–A7			–C8			Unit
			Min	Typ	Max	Min	Typ	Max	Min	Typ	Max	
f_{HSCLK}	Input clock frequency (high-speed I/O performance pin)	×10	5	—	142.5	5	—	100	5	—	100	MHz
		×8	5	—	142.5	5	—	100	5	—	100	MHz
		×7	5	—	142.5	5	—	100	5	—	100	MHz
		×4	5	—	142.5	5	—	100	5	—	100	MHz
		×2	5	—	142.5	5	—	100	5	—	100	MHz
		×1	5	—	285	5	—	200	5	—	200	MHz
HSIODR	Data rate (high-speed I/O performance pin)	×10	100	—	285	100	—	200	100	—	200	Mbps
		×8	80	—	285	80	—	200	80	—	200	Mbps
		×7	70	—	285	70	—	200	70	—	200	Mbps
		×4	40	—	285	40	—	200	40	—	200	Mbps
		×2	20	—	285	20	—	200	20	—	200	Mbps
		×1	10	—	285	10	—	200	10	—	200	Mbps
f_{HSCLK}	Input clock frequency (low-speed I/O performance pin)	×10	5	—	100	5	—	100	5	—	100	MHz
		×8	5	—	100	5	—	100	5	—	100	MHz
		×7	5	—	100	5	—	100	5	—	100	MHz
		×4	5	—	100	5	—	100	5	—	100	MHz
		×2	5	—	100	5	—	100	5	—	100	MHz
		×1	5	—	200	5	—	200	5	—	200	MHz
HSIODR	Data rate (low-speed I/O performance pin)	×10	100	—	200	100	—	200	100	—	200	Mbps

continued...

10M16SCE144I7G Intel IC FPGA 101 I/O 144EQFP

Symbol	Parameter	Mode	–C7, –I7			–A7			–C8			Unit
			Min	Typ	Max	Min	Typ	Max	Min	Typ	Max	
		×8	80	—	200	80	—	200	80	—	200	Mbps
		×7	70	—	200	70	—	200	70	—	200	Mbps
		×4	40	—	200	40	—	200	40	—	200	Mbps
		×2	20	—	200	20	—	200	20	—	200	Mbps
		×1	10	—	200	10	—	200	10	—	200	Mbps
t_{DUTY}	Duty cycle on transmitter output clock	—	45	—	55	45	—	55	45	—	55	%
TCCS[68]	Transmitter channel-to-channel skew	—	—	—	300	—	—	300	—	—	300	ps
$t_{x\ Jitter}$[69]	Output jitter	—	—	—	1,000	—	—	1,000	—	—	1,000	ps
t_{RISE}	Rise time	20 – 80%, C_{LOAD} = 5 pF	—	500	—	—	500	—	—	500	—	ps
t_{FALL}	Fall time	20 – 80%, C_{LOAD} = 5 pF	—	500	—	—	500	—	—	500	—	ps
t_{LOCK}	Time required for the PLL to lock, after `CONF_DONE` signal goes high, indicating the completion of device configuration	—	—	—	1	—	—	1	—	—	1	ms

(68) TCCS specifications apply to I/O banks from the same side only.

(69) TX jitter is the jitter induced from core noise and I/O switching noise.

Dual Supply Devices Emulated LVDS_E_3R, SLVS, and Sub-LVDS Transmitter Timing Specifications

Table 44. Emulated LVDS_E_3R, SLVS, and Sub-LVDS Transmitter Timing Specifications for Intel MAX 10 Dual Supply Devices

Emulated **LVDS_E_3R**, **SLVS**, and **Sub-LVDS** transmitters are supported at the output pin of all I/O banks.

Symbol	Parameter	Mode	–I6, –A6, –C7, –I7			–A7			–C8			Unit
			Min	Typ	Max	Min	Typ	Max	Min	Typ	Max	
f_{HSCLK}	Input clock frequency (high-speed I/O performance pin)	×10	5	—	300	5	—	275	5	—	275	MHz
		×8	5	—	300	5	—	275	5	—	275	MHz
		×7	5	—	300	5	—	275	5	—	275	MHz
		×4	5	—	300	5	—	275	5	—	275	MHz
		×2	5	—	300	5	—	275	5	—	275	MHz
		×1	5	—	300	5	—	275	5	—	275	MHz
HSIODR	Data rate (high-speed I/O performance pin)	×10	100	—	600	100	—	550	100	—	550	Mbps
		×8	80	—	600	80	—	550	80	—	550	Mbps
		×7	70	—	600	70	—	550	70	—	550	Mbps
		×4	40	—	600	40	—	550	40	—	550	Mbps
		×2	20	—	600	20	—	550	20	—	550	Mbps
		×1	10	—	300	10	—	275	10	—	275	Mbps
f_{HSCLK}	Input clock frequency (low-speed I/O performance pin)	×10	5	—	150	5	—	150	5	—	150	MHz
		×8	5	—	150	5	—	150	5	—	150	MHz
		×7	5	—	150	5	—	150	5	—	150	MHz
		×4	5	—	150	5	—	150	5	—	150	MHz
		×2	5	—	150	5	—	150	5	—	150	MHz
		×1	5	—	300	5	—	300	5	—	300	MHz
HSIODR	Data rate (low-speed I/O performance pin)	×10	100	—	300	100	—	300	100	—	300	Mbps
		×8	80	—	300	80	—	300	80	—	300	Mbps

continued...

Symbol	Parameter	Mode	–I6, –A6, –C7, –I7			–A7			–C8			Unit
			Min	Typ	Max	Min	Typ	Max	Min	Typ	Max	
		×7	70	—	300	70	—	300	70	—	300	Mbps
		×4	40	—	300	40	—	300	40	—	300	Mbps
		×2	20	—	300	20	—	300	20	—	300	Mbps
		×1	10	—	300	10	—	300	10	—	300	Mbps
t_{DUTY}	Duty cycle on transmitter output clock	—	45	—	55	45	—	55	45	—	55	%
TCCS[70]	Transmitter channel-to-channel skew	—	—	—	300	—	—	300	—	—	300	ps
$t_{x\ Jitter}$[71]	Output jitter (high-speed I/O performance pin)	—	—	—	425	—	—	425	—	—	425	ps
	Output jitter (low-speed I/O performance pin)	—	—	—	470	—	—	470	—	—	470	ps
t_{RISE}	Rise time	20 – 80%, C_{LOAD} = 5 pF	—	500	—	—	500	—	—	500	—	ps
t_{FALL}	Fall time	20 – 80%, C_{LOAD} = 5 pF	—	500	—	—	500	—	—	500	—	ps
t_{LOCK}	Time required for the PLL to lock, after CONF_DONE signal goes high, indicating the completion of device configuration	—	—	—	1	—	—	1	—	—	1	ms

(70) TCCS specifications apply to I/O banks from the same side only.

(71) TX jitter is the jitter induced from core noise and I/O switching noise.

LVDS, TMDS, HiSpi, SLVS, and Sub-LVDS Receiver Timing Specifications

Single Supply Devices LVDS Receiver Timing Specifications

Table 45. LVDS Receiver Timing Specifications for Intel MAX 10 Single Supply Devices

LVDS receivers are supported at all banks.

Symbol	Parameter	Mode	–C7, –I7		–A7		–C8		Unit
			Min	Max	Min	Max	Min	Max	
f_{HSCLK}	Input clock frequency (high-speed I/O performance pin)	×10	5	145	5	100	5	100	MHz
		×8	5	145	5	100	5	100	MHz
		×7	5	145	5	100	5	100	MHz
		×4	5	145	5	100	5	100	MHz
		×2	5	145	5	100	5	100	MHz
		×1	5	290	5	200	5	200	MHz
HSIODR	Data rate (high-speed I/O performance pin)	×10	100	290	100	200	100	200	Mbps
		×8	80	290	80	200	80	200	Mbps
		×7	70	290	70	200	70	200	Mbps
		×4	40	290	40	200	40	200	Mbps
		×2	20	290	20	200	20	200	Mbps
		×1	10	290	10	200	10	200	Mbps
f_{HSCLK}	Input clock frequency (low-speed I/O performance pin)	×10	5	100	5	100	5	100	MHz
		×8	5	100	5	100	5	100	MHz
		×7	5	100	5	100	5	100	MHz
		×4	5	100	5	100	5	100	MHz
		×2	5	100	5	100	5	100	MHz
		×1	5	200	5	200	5	200	MHz
HSIODR	Data rate (low-speed I/O performance pin)	×10	100	200	100	200	100	200	Mbps

continued...

Symbol	Parameter	Mode	–C7, –I7		–A7		–C8		Unit
			Min	Max	Min	Max	Min	Max	
		×8	80	200	80	200	80	200	Mbps
		×7	70	200	70	200	70	200	Mbps
		×4	40	200	40	200	40	200	Mbps
		×2	20	200	20	200	20	200	Mbps
		×1	10	200	10	200	10	200	Mbps
SW	Sampling window (high-speed I/O performance pin)	—	—	910	—	910	—	910	ps
	Sampling window (low-speed I/O performance pin)	—	—	1,110	—	1,110	—	1,110	ps
$t_{x\ Jitter}$(72)	Input jitter	—	—	1,000	—	1,000	—	1,000	ps
t_{LOCK}	Time required for the PLL to lock, after CONF_DONE signal goes high, indicating the completion of device configuration	—	—	1	—	1	—	1	ms

Dual Supply Devices LVDS, TMDS, HiSpi, SLVS, and Sub-LVDS Receiver Timing Specifications

Table 46. LVDS, TMDS, HiSpi, SLVS, and Sub-LVDS Receiver Timing Specifications for Intel MAX 10 Dual Supply Devices

LVDS, **TMDS**, **HiSpi**, **SLVS**, and **Sub-LVDS** receivers are supported at all banks.

Symbol	Parameter	Mode	–I6, –A6, –C7, –I7		–A7		–C8		Unit
			Min	Max	Min	Max	Min	Max	
f_{HSCLK}	Input clock frequency (high-speed I/O performance pin)	×10	5	350	5	320	5	320	MHz
		×8	5	360	5	320	5	320	MHz
		×7	5	350	5	320	5	320	MHz
		×4	5	360	5	320	5	320	MHz

continued...

(72) TX jitter is the jitter induced from core noise and I/O switching noise.

Symbol	Parameter	Mode	–I6, –A6, –C7, –I7		–A7		–C8		Unit
			Min	Max	Min	Max	Min	Max	
		×2	5	360	5	320	5	320	MHz
		×1	5	360	5	320	5	320	MHz
HSIODR	Data rate (high-speed I/O performance pin)	×10	100	700	100	640	100	640	Mbps
		×8	80	720	80	640	80	640	Mbps
		×7	70	700	70	640	70	640	Mbps
		×4	40	720	40	640	40	640	Mbps
		×2	20	720	20	640	20	640	Mbps
		×1	10	360	10	320	10	320	Mbps
f_{HSCLK}	Input clock frequency (low-speed I/O performance pin)	×10	5	150	5	150	5	150	MHz
		×8	5	150	5	150	5	150	MHz
		×7	5	150	5	150	5	150	MHz
		×4	5	150	5	150	5	150	MHz
		×2	5	150	5	150	5	150	MHz
		×1	5	300	5	300	5	300	MHz
HSIODR	Data rate (low-speed I/O performance pin)	×10	100	300	100	300	100	300	Mbps
		×8	80	300	80	300	80	300	Mbps
		×7	70	300	70	300	70	300	Mbps
		×4	40	300	40	300	40	300	Mbps
		×2	20	300	20	300	20	300	Mbps
		×1	10	300	10	300	10	300	Mbps
SW	Sampling window (high-speed I/O performance pin)	—	—	510	—	510	—	510	ps

continued...

Symbol	Parameter	Mode	–I6, –A6, –C7, –I7		–A7		–C8		Unit
			Min	Max	Min	Max	Min	Max	
	Sampling window (low-speed I/O performance pin)	—	—	910	—	910	—	910	ps
$t_{x\ Jitter}$(73)	Input jitter	—	—	500	—	500	—	500	ps
t_{LOCK}	Time required for the PLL to lock, after CONF_DONE signal goes high, indicating the completion of device configuration	—	—	1	—	1	—	1	ms

Memory Standards Supported by the Soft Memory Controller

Table 47. Memory Standards Supported by the Soft Memory Controller for Intel MAX 10 Devices

Contact your local sales representatives for access to the -I6 or -A6 speed grade devices in the Intel Quartus Prime software.

External Memory Interface Standard	Rate Support	Speed Grade	Voltage (V)	Max Frequency (MHz)
DDR3 SDRAM	Half	–I6	1.5	303
DDR3L SDRAM	Half	–I6	1.35	303
DDR2 SDRAM	Half	–I6	1.8	200
		–I7 and –C7		167
LPDDR2(74)	Half	–I6	1.2	200(75)

Related Information

External Memory Interface Spec Estimator
Provides the specific details of the memory standards supported.

(73) TX jitter is the jitter induced from core noise and I/O switching noise.

(74) Intel MAX 10 devices support only single-die LPDDR2.

(75) To achieve the specified performance, constrain the memory device I/O and core power supply variation to within ±3%. By default, the frequency is 167 MHz.

10M16SCE144I7G Intel IC FPGA 101 I/O 144EQFP

Memory Output Clock Jitter Specifications

Intel MAX 10 devices support external memory interfaces up to 303 MHz. The external memory interfaces for Intel MAX 10 devices calibrate automatically.

The memory output clock jitter measurements are for 200 consecutive clock cycles.

The clock jitter specification applies to memory output clock pins generated using DDIO circuits clocked by a PLL output routed on a PHY clock network.

DDR3 and LPDDR2 SDRAM memory interfaces are only supported on the fast speed grade device.

Table 48. Memory Output Clock Jitter Specifications for Intel MAX 10 Devices

Parameter	Symbol	–6 Speed Grade		–7 Speed Grade		Unit
		Min	Max	Min	Max	
Clock period jitter	$t_{JIT(per)}$	–127	127	–215	215	ps
Cycle-to-cycle period jitter	$t_{JIT(cc)}$	—	242	—	360	ps

Related Information

Literature: External Memory Interfaces
Provides more information about external memory system performance specifications, board design guidelines, timing analysis, simulation, and debugging information.

Configuration Specifications

This section provides configuration specifications and timing for Intel MAX 10 devices.

10M16SCE144I7G Intel IC FPGA 101 I/O 144EQFP

JTAG Timing Parameters

Table 49. JTAG Timing Parameters for Intel MAX 10 Devices

The values are based on C_L = 10 pF of TDO.

The affected Boundary Scan Test (BST) instructions are SAMPLE/PRELOAD, EXTEST, INTEST, and CHECK_STATUS.

Symbol	Parameter	Non-BST and non-CONFIG_IO Operation		BST and CONFIG_IO Operation		Unit
		Minimum	Maximum	Minimum	Maximum	
t_{JCP}	TCK clock period	40	—	50	—	ns
t_{JCH}	TCK clock high time	20	—	25	—	ns
t_{JCL}	TCK clock low time	20	—	25	—	ns
t_{JPSU_TDI}	JTAG port setup time	2	—	2	—	ns
t_{JPSU_TMS}	JTAG port setup time	3	—	3	—	ns
t_{JPH}	JTAG port hold time	10	—	10	—	ns
t_{JPCO}	JTAG port clock to output	—	• 15 (for V_{CCIO} = 3.3, 3.0, and 2.5 V) • 17 (for V_{CCIO} = 1.8 and 1.5 V)	—	• 18 (for V_{CCIO} = 3.3, 3.0, and 2.5 V) • 20 (for V_{CCIO} = 1.8 and 1.5 V)	ns
t_{JPZX}	JTAG port high impedance to valid output	—	• 15 (for V_{CCIO} = 3.3, 3.0, and 2.5 V) • 17 (for V_{CCIO} = 1.8 and 1.5 V)	—	• 15 (for V_{CCIO} = 3.3, 3.0, and 2.5 V) • 17 (for V_{CCIO} = 1.8 and 1.5 V)	ns
t_{JPXZ}	JTAG port valid output to high impedance	—	• 15 (for V_{CCIO} = 3.3, 3.0, and 2.5 V) • 17 (for V_{CCIO} = 1.8 and 1.5 V)	—	• 15 (for V_{CCIO} = 3.3, 3.0, and 2.5 V) • 17 (for V_{CCIO} = 1.8 and 1.5 V)	ns

Remote System Upgrade Circuitry Timing Specifications

Table 50. Remote System Upgrade Circuitry Timing Specifications for Intel MAX 10 Devices

Parameter	Device	Minimum	Maximum	Unit
$t_{MAX_RU_CLK}$	All	—	40	MHz
$t_{RU_nCONFIG}$	10M02, 10M04, 10M08, 10M16, 10M25	250	—	ns
	10M40, 10M50	350	—	ns
$t_{RU_nRSTIMER}$	10M02, 10M04, 10M08, 10M16, 10M25	300	—	ns
	10M40, 10M50	500	—	ns

User Watchdog Internal Circuitry Timing Specifications

Table 51. User Watchdog Timer Specifications for Intel MAX 10 Devices

The specifications are subject to PVT changes.

Parameter	Device	Minimum	Typical	Maximum	Unit
User watchdog frequency	10M02, 10M04, 10M08, 10M16, 10M25	3.4	5.1	7.3	MHz
	10M40, 10M50	2.2	3.3	4.8	MHz

Uncompressed Raw Binary File (.rbf) Sizes

Table 52. Uncompressed .rbf Sizes for Intel MAX 10 Devices

Device	CFM Data Size (bits)	
	Without Memory Initialization	With Memory Initialization
10M02/10M02SCU324	554,000/1,540,000	—
10M04	1,540,000	1,880,000
10M08	1,540,000	1,880,000
10M16	2,800,000	3,430,000

continued...

Device	CFM Data Size (bits)	
	Without Memory Initialization	With Memory Initialization
10M25	4,140,000	4,780,000
10M40	7,840,000	9,670,000
10M50	7,840,000	9,670,000

Internal Configuration Time

The internal configuration time measurement is from the rising edge of nSTATUS signal to the rising edge of CONF_DONE signal.

Table 53. Internal Configuration Time for Intel MAX 10 Devices (Uncompressed .rbf)

Device	Internal Configuration Time (ms)							
	Unencrypted				Encrypted			
	Without Memory Initialization		With Memory Initialization		Without Memory Initialization		With Memory Initialization	
	Min	Max	Min	Max	Min	Max	Min	Max
10M02/ 10M02SCU324	0.3/0.6	1.7/2.7	—	—	1.7/5.0	5.4/15.0	—	—
10M04	0.6	2.7	1.0	3.4	5.0	15.0	6.8	19.6
10M08	0.6	2.7	1.0	3.4	5.0	15.0	6.8	19.6
10M16	1.1	3.7	1.4	4.5	9.3	25.3	11.7	31.5
10M25	1.0	3.7	1.3	4.4	14.0	38.1	16.9	45.7
10M40	2.6	6.9	3.2	9.8	41.5	112.1	51.7	139.6
10M50	2.6	6.9	3.2	9.8	41.5	112.1	51.7	139.6

Table 54. Internal Configuration Time for Intel MAX 10 Devices (Compressed .rbf)

Compression ratio depends on design complexity. The minimum value is based on the best case (25% of original `.rbf` sizes) and the maximum value is based on the typical case (70% of original `.rbf` sizes).

Device	Internal Configuration Time (ms)			
	Unencrypted/Encrypted			
	Without Memory Initialization		With Memory Initialization	
	Min	Max	Min	Max
10M02/10M02SCU324	0.3/0.6	5.2/10.7	—	—
10M04	0.6	10.7	1.0	13.9
10M08	0.6	10.7	1.0	13.9
10M16	1.1	17.9	1.4	22.3
10M25	1.1	26.9	1.4	32.2
10M40	2.6	66.1	3.2	82.2
10M50	2.6	66.1	3.2	82.2

Internal Configuration Timing Parameter

Table 55. Internal Configuration Timing Parameter for Intel MAX 10 Devices

Symbol	Parameter	Device	Minimum	Maximum	Unit
t_{CD2UM}	CONF_DONE high to user mode	10M02, 10M04, 10M08, 10M16, 10M25	182.8	385.5	µs
		10M40, 10M50	275.3	605.7	µs

I/O Timing

The data is typically used prior to designing the FPGA to get an estimate of the timing budget as part of the link timing analysis.

The Intel Quartus Prime Timing Analyzer provides a more accurate and precise I/O timing data based on the specific device and design after you complete place-and-route.

Table 56. I/O Timing for Intel MAX 10 Devices

These I/O timing parameters are for the 3.3-V LVTTL I/O standard with the maximum drive strength and fast slew rate for 10M08DAF484 device.

Symbol	Parameter	–C7, –I7	–C8	Unit
T_{su}	Global clock setup time	–0.750	–0.808	ns
T_h	Global clock hold time	1.180	1.215	ns
T_{co}	Global clock to output delay	5.131	5.575	ns
T_{pd}	Best case pin-to-pin propagation delay through one LUT	4.907	5.467	ns

Programmable IOE Delay

Programmable IOE Delay On Row Pins

Table 57. IOE Programmable Delay on Row Pins for Intel MAX 10 Devices

The incremental values for the settings are generally linear. For exact values of each setting, refer to the **Assignment Name** column in the latest version of the Intel Quartus Prime software.

The minimum and maximum offset timing numbers are in reference to setting '0' as available in the Intel Quartus Prime software.

Parameter	Paths Affected	Number of Settings	Minimum Offset	Maximum Offset							Unit
				Fast Corner		Slow Corner					
				–I7	–C8	–A6	–C7	–C8	–I7	–A7	
Input delay from pin to internal cells	Pad to I/O dataout to core	7	0	0.815	0.873	1.831	1.811	1.874	1.871	1.922	ns
Input delay from pin to input register	Pad to I/O input register	8	0	0.924	0.992	2.081	2.055	2.125	2.127	2.185	ns
Delay from output register to output pin	I/O output register to pad	2	0	0.479	0.514	1.069	1.070	1.117	1.105	1.134	ns

Programmable IOE Delay for Column Pins

Table 58. IOE Programmable Delay on Column Pins for Intel MAX 10 Devices

The incremental values for the settings are generally linear. For exact values of each setting, refer to the **Assignment Name** column in the latest version of the Intel Quartus Prime software.

The minimum and maximum offset timing numbers are in reference to setting '0' as available in the Intel Quartus Prime software.

Parameter	Paths Affected	Number of Settings	Minimum Offset	Maximum Offset							Unit
				Fast Corner		Slow Corner					
				–I7	–C8	–A6	–C7	–C8	–I7	–A7	
Input delay from pin to internal cells	Pad to I/O dataout to core	7	0	0.81	0.868	1.823	1.802	1.864	1.862	1.912	ns
Input delay from pin to input register	Pad to I/O input register	8	0	0.914	0.981	2.06	2.032	2.101	2.102	2.161	ns
Delay from output register to output pin	I/O output register to pad	2	0	0.435	0.466	0.971	0.97	1.013	1.001	1.028	ns

Glossary

Table 59. Glossary

Term	Definition
JTAG Timing Specifications	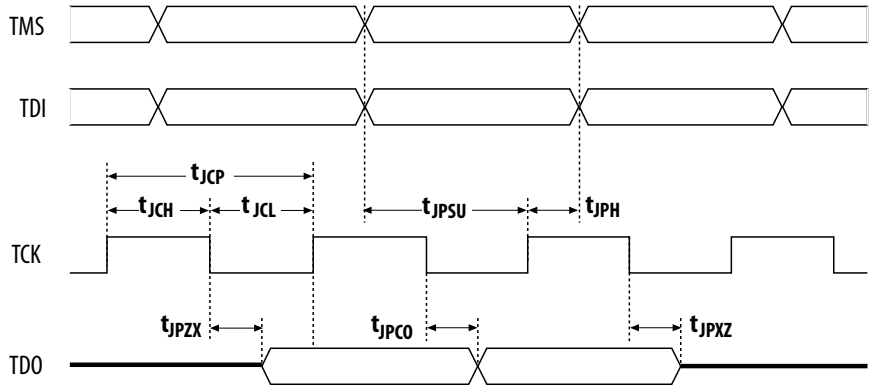
R_L	Receiver differential input discrete resistor (external to Intel MAX 10 devices).
RSKM (Receiver input skew margin)	HIGH-SPEED I/O block: The total margin left after accounting for the sampling window and TCCS. RSKM = (TUI – SW – TCCS) / 2.
Sampling window (SW)	HIGH-SPEED I/O Block: The period of time during which the data must be valid to capture it correctly. The setup and hold times determine the ideal strobe position in the sampling window.
Single-ended voltage referenced I/O standard	The AC input signal values indicate the voltage levels at which the receiver must meet its timing specifications. The DC input signal values indicate the voltage levels at which the final logic state of the receiver is unambiguously defined. After the receiver input crosses the AC value, the receiver changes to the new logic state. The new logic state is then maintained as long as the input stays beyond the DC threshold. This approach is intended to provide predictable receiver timing in the presence of input waveform ringing.
t_C	High-speed receiver/transmitter input and output clock period.
TCCS (Channel-to- channel-skew)	HIGH-SPEED I/O block: The timing difference between the fastest and slowest output edges, including t_{CO} variation and clock skew. The clock is included in the TCCS measurement.
t_{cin}	Delay from clock pad to I/O input register.
t_{CO}	Delay from clock pad to I/O output.
t_{cout}	Delay from clock pad to I/O output register.

continued...

Term	Definition
t_{DUTY}	HIGH-SPEED I/O Block: Duty cycle on high-speed transmitter output clock.
t_{FALL}	Signal high-to-low transition time (80–20%).
t_H	Input register hold time.
Timing Unit Interval (TUI)	HIGH-SPEED I/O block: The timing budget allowed for skew, propagation delays, and data sampling window. (TUI = 1/(Receiver Input Clock Frequency Multiplication Factor) = t_C/w).
$t_{INJITTER}$	Period jitter on PLL clock input.
$t_{OUTJITTER_DEDCLK}$	Period jitter on dedicated clock output driven by a PLL.
$t_{OUTJITTER_IO}$	Period jitter on general purpose I/O driven by a PLL.
t_{pllcin}	Delay from PLL inclk pad to I/O input register.
$t_{pllcout}$	Delay from PLL inclk pad to I/O output register.
t_{RISE}	Signal low-to-high transition time (20–80%).
t_{SU}	Input register setup time.
$V_{CM(DC)}$	DC common mode input voltage.
$V_{DIF(AC)}$	AC differential input voltage: The minimum AC input differential voltage required for switching.
$V_{DIF(DC)}$	DC differential input voltage: The minimum DC input differential voltage required for switching.
V_{HYS}	Hysteresis for Schmitt trigger input.
V_{ICM}	Input common mode voltage: The common mode of the differential signal at the receiver.
V_{ID}	Input differential Voltage Swing: The difference in voltage between the positive and complementary conductors of a differential transmission at the receiver.
V_{IH}	Voltage input high: The minimum positive voltage applied to the input which is accepted by the device as a logic high.
$V_{IH(AC)}$	High-level AC input voltage.
$V_{IH(DC)}$	High-level DC input voltage.
V_{IL}	Voltage input low: The maximum positive voltage applied to the input which is accepted by the device as a logic low.
$V_{IL\ (AC)}$	Low-level AC input voltage.
$V_{IL\ (DC)}$	Low-level DC input voltage.
V_{IN}	DC input voltage.

continued...

Term	Definition
V_{OCM}	Output common mode voltage: The common mode of the differential signal at the transmitter.
V_{OD}	Output differential voltage swing: The difference in voltage between the positive and complementary conductors of a differential transmission line at the transmitter. $V_{OD} = V_{OH} - V_{OL}$.
V_{OH}	Voltage output high: The maximum positive voltage from an output which the device considers is accepted as the minimum positive high level.
V_{OL}	Voltage output low: The maximum positive voltage from an output which the device considers is accepted as the maximum positive low level.
V_{OS}	Output offset voltage: $V_{OS} = (V_{OH} + V_{OL}) / 2$.
$V_{OX\ (AC)}$	AC differential Output cross point voltage: The voltage at which the differential output signals must cross.
V_{REF}	Reference voltage for SSTL, HSTL, and HSUL I/O Standards.
$V_{REF(AC)}$	AC input reference voltage for SSTL, HSTL, and HSUL I/O Standards. $V_{REF(AC)} = V_{REF(DC)}$ + noise. The peak-to-peak AC noise on V_{REF} should not exceed 2% of $V_{REF(DC)}$.
$V_{REF(DC)}$	DC input reference voltage for SSTL, HSTL, and HSUL I/O Standards.
$V_{SWING\ (AC)}$	AC differential input voltage: AC Input differential voltage required for switching.
$V_{SWING\ (DC)}$	DC differential input voltage: DC Input differential voltage required for switching.
V_{TT}	Termination voltage for SSTL, HSTL, and HSUL I/O Standards.
$V_{X\ (AC)}$	AC differential Input cross point voltage: The voltage at which the differential input signals must cross.

10M16SCE144I7G Intel IC FPGA 101 I/O 144EQFP

Document Revision History for the Intel MAX 10 FPGA Device Datasheet

Document Version	Changes
2020.06.30	• Added V_{CCIO} specifications for 1.0 V in the following tables: — *Power Supplies Recommended Operating Conditions for Intel MAX 10 Single Supply Devices* — *Power Supplies Recommended Operating Conditions for Intel MAX 10 Dual Supply Devices* • Added 1.0 V LVCMOS specifications in the *Single-Ended I/O Standards Specifications for Intel MAX 10 Devices* table. • Added specifications for 10M02SCU324 device in the following tables: — *Uncompressed .rbf Sizes for Intel MAX 10 Devices* — *Internal Configuration Time for Intel MAX 10 Devices (Uncompressed .rbf)* — *Internal Configuration Time for Intel MAX 10 Devices (Compressed .rbf)*
2018.06.29	• Removed links on instant-on feature. • Added JTAG timing specifications term in *Glossary*. • Renamed the following IP cores as per Intel rebranding: — Renamed Altera Modular ADC IP core to Modular ADC core Intel FPGA IP core. — Renamed Altera Modular Dual ADC IP core to Modular Dual ADC core Intel FPGA IP core.

Date	Version	Changes
December 2017	2017.12.15	• Removed the units for "Input resistance" and "Input capacitance" parameters in the following tables: — *ADC Performance Specifications for Intel MAX 10 Single Supply Devices* — *ADC Performance Specifications for Intel MAX 10 Dual Supply Devices* • Removed the specification with memory initialization for 10M02 device in the *Uncompressed .rbf Sizes for Intel MAX 10 Devices* table.
June 2017	2017.06.16	• Added notes for T_J for Industrial and Automotive devices in Recommended Operating Conditions for Intel MAX 10 Devices table. • Updated the parameter in Internal Weak Pull-Up Resistor for Intel MAX 10 Devices table. • Changed "Performance" to "Frequency" in UFM Performance Specifications for Intel MAX 10 Devices table. • Removed PowerPlay text from tool name.
February 2017	2017.02.21	• Rebranded as Intel.
October 2016	2016.10.31	• Updated the note to the Intel MAX 10 Device Grades and Speed Grades Supported table. • Updated the Memory Standards Supported by the Soft Memory Controller for Intel MAX 10 Devices table.

continued...

10M16SCE144I7G Intel IC FPGA 101 I/O 144EQFP

Date	Version	Changes
May 2016	2016.05.02	• Updated t_{RAMP} specifications in Recommended Operating Conditions for Intel MAX 10 Devices table. — Removed standard POR and fast POR specifications. — Updated maximum value from 3 ms to 10 ms and added a not for the minimum value. • Added Supply Current and Power Consumption section. • Added the following tables: — Memory Standards Supported by the Soft Memory Controller for Intel MAX 10 Devices — Internal Configuration Timing Parameter for Intel MAX 10 Devices • Removed POR Delay Specifications for Intel MAX 10 Devices table. • Updated the description in the Internal Configuration Time section. • Updated the following tables: — Internal Configuration Time for Intel MAX 10 Devices (Uncompressed `.rbf`) — Internal Configuration Time for Intel MAX 10 Devices (Compressed `.rbf`)
January 2016	2016.01.22	• Added description about automotive temperature devices in the Programming/Erasure Specifications table. • Changed the pin capacitance to maximum values. • Updated maximum TCCS specifications from 410 ps to 300 ps in the following tables: — True PPDS and Emulated PPDS_E_3R Transmitter Timing Specifications for Intel MAX 10 Dual Supply Devices — True RSDS and Emulated RSDS_E_3R Transmitter Timing Specifications for Intel MAX 10 Dual Supply Devices — Emulated RSDS_E_1R Transmitter Timing Specifications for Intel MAX 10 Dual Supply Devices — True Mini-LVDS and Emulated Mini-LVDS_E_3R Transmitter Timing Specifications for Intel MAX 10 Dual Supply Devices — True LVDS Transmitter Timing Specifications for Intel MAX 10 Single Supply Devices — True LVDS Transmitter Timing Specifications for Intel MAX 10 Dual Supply Devices — Emulated LVDS_E_3R Transmitter Timing Specifications for Intel MAX 10 Single Supply Devices — Emulated LVDS_E_3R, SLVS, and Sub-LVDS Transmitter Timing Specifications for Intel MAX 10 Dual Supply Devices • Added new table: True RSDS and Emulated RSDS_E_3R Transmitter Timing Specifications for Intel MAX 10 Single Supply Devices. • Updated maximum f_{HSCLK} and HSIODR specifications for –A6, –C7, and –I7 speed grades in True LVDS Transmitter Timing Specifications for Intel MAX 10 Dual Supply Devices table. • Updated SW specifications in the following tables: — LVDS Receiver Timing Specifications for Intel MAX 10 Single Supply Devices — LVDS, TMDS, HiSpi, SLVS, and Sub-LVDS Receiver Timing Specifications for Intel MAX 10 Dual Supply Devices • Updated maximum f_{HSCLK} and HSIODR (high-speed I/O performance pin) specifications for –I6, –A6, –C7, –I7 speed grades in LVDS, TMDS, HiSpi, SLVS, and Sub-LVDS Receiver Timing Specifications for Intel MAX 10 Dual Supply Devices table. • Removed Internal Configuration Time information in the Uncompressed .rbf Sizes for Intel MAX 10 Devices table. • Added Internal Configuration Time tables for uncompressed `.rbf` files and compressed `.rbf` files. • Removed Preliminary tags for all tables.

continued...

Date	Version	Changes
November 2015	2015.11.02	• Added description to *Maximum Allowed Overshoot During Transitions over a 11.4-Year Time Frame* topic. • Added ADC_VREF Pin Leakage Current for Intel MAX 10 Devices table. • Updated the condition for "Bus-hold high, sustaining current" parameter from "V_{IN} < V_{IL} (minimum)" to "V_{IN} < V_{IH} (minimum)" in Bus Hold Parameters table. • Added –A6 speed grade in the following tables: — Intel MAX 10 Device Grades and Speed Grades Supported — Series OCT without Calibration Specifications for Intel MAX 10 Devices — Clock Tree Specifications for Intel MAX 10 Devices — Embedded Multiplier Specifications for Intel MAX 10 Devices — Memory Block Performance Specifications for Intel MAX 10 Devices — True PPDS and Emulated PPDS_E_3R Transmitter Timing Specifications for Intel MAX 10 Dual Supply Devices — True RSDS and Emulated RSDS_E_3R Transmitter Timing Specifications for Intel MAX 10 Dual Supply Devices — Emulated RSDS_E_1R Transmitter Timing Specifications for Intel MAX 10 Dual Supply Devices — True Mini-LVDS and Emulated Mini-LVDS_E_3R Transmitter Timing Specifications for Intel MAX 10 Dual Supply Devices — True LVDS Transmitter Timing Specifications for Intel MAX 10 Dual Supply Devices — Emulated LVDS_E_3R, SLVS, and Sub-LVDS Transmitter Timing Specifications for Intel MAX 10 Dual Supply Devices — LVDS, TMDS, HiSpi, SLVS, and Sub-LVDS Receiver Timing Specifications for Intel MAX 10 Dual Supply Devices — IOE Programmable Delay on Row Pins for Intel MAX 10 Devices — IOE Programmable Delay on Column Pins for Intel MAX 10 Devices • Updated the maximum value for input clock cycle-to-cycle jitter ($t_{INJITTER_CCJ}$) with F_{INPFD} < 100 MHz condition from 750 ps to ±750 ps in PLL Specifications for Intel MAX 10 Devices table. • Updated the dual supply mode performance in Embedded Multiplier Specifications for Intel MAX 10 Devices table. • Updated the dual supply mode performance in Memory Block Performance Specifications for Intel MAX 10 Devices table. • Added typical specifications in Internal Oscillator Frequencies for Intel MAX 10 Devices table. • Updated specifications in UFM Performance Specifications for Intel MAX 10 Devices table. • Updated sampling window specifications in LVDS, TMDS, HiSpi, SLVS, and Sub-LVDS Receiver Timing Specifications for Intel MAX 10 Dual Supply Devices table. • Updated IOE programmable delay for row and column pins. • Changed instances of *Quartus II* to *Quartus Prime*.
June 2015	2015.06.12	• Updated the maximum values in Internal Weak Pull-Up Resistor for Intel MAX 10 Devices table. • Removed Internal Weak Pull-Up Resistor equation. • Updated the note for input resistance and input capacitance parameters in the ADC Performance Specifications table for both single supply and dual supply devices. Note: Download the SPICE models for simulation. • Added a note to AC Accuracy - THD, SNR, and SINAD parameters in the ADC Performance Specifications for Intel MAX 10 Dual Supply Devices table. Note: When using internal V_{REF}, THD = 66 dB, SNR = 58 dB and SINAD = 57.5 dB for dedicated ADC input channels. • Updated clock period jitter and cycle-to-cycle period jitter parameters in the Memory Output Clock Jitter Specifications for Intel MAX 10 Devices table.

continued...

10M16SCE144I7G Intel IC FPGA 101 I/O 144EQFP

Date	Version	Changes
May 2015	2015.05.04	• Updated a note to V_{CCIO} for both single supply and dual supply power supplies recommended operating conditions tables. Note updated: V_{CCIO} for all I/O banks must be powered up during user mode because V_{CCIO} I/O banks are used for the ADC and I/O functionalities. • Updated Example for OCT Resistance Calculation after Calibration at Device Power-Up. • Removed a note to BLVDS in Differential I/O Standards Specifications for Intel MAX 10 Devices table. BLVDS is now supported in Intel MAX 10 single supply devices. Note removed: BLVDS TX is not supported in single supply devices. • Updated ADC Performance Specifications for both single supply and dual supply devices. — Changed the symbol for Operating junction temperature range parameter from T_A to T_J. — Edited sampling rate maximum value from 1000 kSPS to 1 MSPS. — Added a note to analog input voltage parameter. — Removed input frequency, f_{IN} specification. — Updated the condition for DNL specification: External V_{REF}, no missing code. Added DNL specification for condition: Internal V_{REF}, no missing code. — Added notes to AC accuracy specifications that the value with prescalar enabled is 6dB less than the specification. — Added a note to On-Chip Temperature Sensor (absolute accuracy) parameter about the averaging calculation. • Updated ADC Performance Specifications for Intel MAX 10 Single Supply Devices table. — Added condition for On-Chip Temperature Sensor (absolute accuracy) parameter: with 64 samples averaging. • Updated ADC Performance Specifications for Intel MAX 10 Dual Supply Devices table. — Updated Digital Supply Voltage minimum value from 1.14 V to 1.15 V and maximum value from 1.26 V to 1.25 V. • Updated f_{HSCLK} and HSIODR specifications for –A7 speed grade in the following tables: — True PPDS and Emulated PPDS_E_3R Transmitter Timing Specifications for Intel MAX 10 Dual Supply Devices — True RSDS and Emulated RSDS_E_3R Transmitter Timing Specifications for Intel MAX 10 Dual Supply Devices — True Mini-LVDS and Emulated Mini-LVDS_E_3R Transmitter Timing Specifications for Intel MAX 10 Dual Supply Devices — True LVDS Transmitter Timing Specifications for Intel MAX 10 Single Supply Devices — True LVDS Transmitter Timing Specifications for Intel MAX 10 Dual Supply Devices — Emulated LVDS_E_3R Transmitter Timing Specifications for Intel MAX 10 Single Supply Devices — Emulated LVDS_E_3R, SLVS, and Sub-LVDS Transmitter Timing Specifications for Intel MAX 10 Dual Supply Devices — LVDS Receiver Timing Specifications for Intel MAX 10 Single Supply Devices — LVDS, TMDS, HiSpi, SLVS, and Sub-LVDS Receiver Timing Specifications for Intel MAX 10 Dual Supply Devices

continued...

Date	Version	Changes
		• Updated TCCS specifications in the following tables: — True PPDS and Emulated PPDS_E_3R Transmitter Timing Specifications for Intel MAX 10 Dual Supply Devices — True RSDS and Emulated RSDS_E_3R Transmitter Timing Specifications for Intel MAX 10 Dual Supply Devices — Emulated RSDS_E_1R Transmitter Timing Specifications for Intel MAX 10 Dual Supply Devices — True Mini-LVDS and Emulated Mini-LVDS_E_3R Transmitter Timing Specifications for Intel MAX 10 Dual Supply Devices — True LVDS Transmitter Timing Specifications for Intel MAX 10 Single Supply Devices — True LVDS Transmitter Timing Specifications for Intel MAX 10 Dual Supply Devices — Emulated LVDS_E_3R Transmitter Timing Specifications for Intel MAX 10 Single Supply Devices — Emulated LVDS_E_3R, SLVS, and Sub-LVDS Transmitter Timing Specifications for Intel MAX 10 Dual Supply Devices • Updated $t_{x\ Jitter}$ specifications in the following tables: — True PPDS and Emulated PPDS_E_3R Transmitter Timing Specifications for Intel MAX 10 Dual Supply Devices — True RSDS and Emulated RSDS_E_3R Transmitter Timing Specifications for Intel MAX 10 Dual Supply Devices — Emulated RSDS_E_1R Transmitter Timing Specifications for Intel MAX 10 Dual Supply Devices — True Mini-LVDS and Emulated Mini-LVDS_E_3R Transmitter Timing Specifications for Intel MAX 10 Dual Supply Devices — True LVDS Transmitter Timing Specifications for Intel MAX 10 Dual Supply Devices — Emulated LVDS_E_3R, SLVS, and Sub-LVDS Transmitter Timing Specifications for Intel MAX 10 Dual Supply Devices • Updated SW specifications in LVDS Receiver Timing Specifications for Intel MAX 10 Single Supply Devices table. • Added a note to $t_{x\ Jitter}$ for all LVDS tables. Note: TX jitter is the jitter induced from core noise and I/O switching noise. • Updated the description for t_{LOCK} for all LVDS tables: Time required for the PLL to lock, after `CONF_DONE` signal goes high, indicating the completion of device configuration. • Updated Memory Output Clock Jitter Specifications section. — Updated maximum external memory interfaces frequency from 300 MHz to 303 MHz. — Updated PLL output routing from global clock network to PHY clock network. • Added I/O Timing for Intel MAX 10 Devices table. • Added V_{HYS} in the Glossary table.
January 2015	2015.01.23	• Removed a note to V_{CCA} in Power Supplies Recommended Operating Conditions for Intel MAX 10 Dual Supply Devices table. This note is not valid: All V_{CCA} pins must be connected together for EQFP package. • Corrected the maximum value for $t_{OUTJITTER_CCJ_IO}$ ($F_{OUT} \geq 100$ MHz) from 60 ps to 650 ps in PLL Specifications for Intel MAX 10 Devices table.
December 2014	2014.12.15	• Restructured Programming/Erasure Specifications for Intel MAX 10 Devices table to add temperature specifications that affect the data retention duration. • Added statements in the I/O Pin Leakage Current section: Input channel leakage of ADC I/O pins due to hot socket is up to maximum of 1.8 mA. The input channel leakage occurs when the ADC IP core is enabled or disabled. This is applicable to all Intel MAX 10 devices with ADC IP core, which are 10M04, 10M08, 10M16, 10M25, 10M40, and 10M50 devices. The ADC I/O pins are in Bank 1A. • Added a statement in the I/O Standards Specifications section: You must perform timing closure analysis to determine the maximum achievable frequency for general purpose I/O standards.

continued...

10M16SCE144I7G Intel IC FPGA 101 I/O 144EQFP

Date	Version	Changes
		• Updated SSTL-2 Class I and II I/O standard specifications for JEDEC compliance as follows: — VIL(AC) Max: Updated from V_{REF} – 0.35 to V_{REF} – 0.31 — VIH(AC) Min: Updated from V_{REF} + 0.35 to V_{REF} + 0.31 • Added a note to BLVDS in Differential I/O Standards Specifications for Intel MAX 10 Devices table: BLVDS TX is not supported in single supply devices. • Added a link to MAX 10 High-Speed LVDS I/O User Guide for the list of I/O standards supported in single supply and dual supply devices. • Added a statement in PLL Specifications for Intel MAX 10 Single Supply Device table: For V36 package, the PLL specification is based on single supply devices. • Added Internal Oscillator Specifications from Intel MAX 10 Clocking and PLL User Guide. • Added UFM specifications for serial interface. • Updated total harmonic distortion (THD) specifications as follows: — Single supply devices: Updated from 65 dB to –65 dB — Dual supply devices: Updated from 70 dB to –70 dB (updated from 65 dB to –65 dB for dual function pin) • Added condition for On-Chip Temperature Sensor—Absolute accuracy parameter in ADC Performance Specifications for Intel MAX 10 Dual Supply Devices table. The condition is: with 64 samples averaging. • Updated the description in Periphery Performance Specifications to mention that proper timing closure is required in design. • Updated HSIODR and f_{HSCLK} specifications for x10 and x7 modes in True LVDS Transmitter Timing Specifications for Intel MAX 10 Dual Supply Devices. • Added specifications for low-speed I/O performance pin sampling window in LVDS Receiver Timing Specifications for Intel MAX 10 Single Supply Devices table: Max = 900 ps for –C7, –I7, –A7, and –C8 speed grades. • Added $t_{RU_nCONFIG}$ and $t_{RU_nRSTIMER}$ specifications for different devices in Remote System Upgrade Circuitry Timing Specifications for Intel MAX 10 Devices table. • Removed the word "internal oscillator" in User Watchdog Timer Specifications for Intel MAX 10 Devices table to avoid confusion. • Added IOE programmable delay specifications.
September 2014	2014.09.22	Initial release.

FPGAMALL
Authorized Distributor

OUR CERTIFICATE

A long-term cooperative relationship can be built between global customers and us by providing excellent products

Business Type	Trading Company, Distributor/Wholesaler
Main Products	Electronic Integrated Circuit
Certifications	ISO9001
Total Annual Revenue	US$2.5 Million - US$5 Million
Country / Region	Hongkong, China
Total Employees	100 - 200 People
Year Established	2018
Main Markets	North America South Asia Western Europe

sales@fpgamall.com
+00852-56428680