https://www.fpgamall.com

THE DATASHEET OF FPGA

EP1SGX25DF1020C7 Intel IC FPGA 607 I/O 1020FBGA

Section I. Stratix GX Device Family Data Sheet

This section provides the data sheet specifications for Stratix® GX devices. It contains feature definitions of the internal architecture, configuration information, testing information, DC operating conditions, and AC timing parameters.

This section includes the following chapters:

- Chapter 1, Introduction to the Stratix GX Device Data Sheet
- Chapter 2, Stratix GX Transceivers
- Chapter 3, Source-Synchronous Signaling With DPA
- Chapter 4, Stratix GX Architecture
- Chapter 5, Configuration & Testing
- Chapter 6, DC & Switching Characteristics
- Chapter 7, Reference & Ordering Information

EP1SGX25DF1020C7 Intel IC FPGA 607 I/O 1020FBGA

Revision History

The table below shows the revision history for Chapters 1 through 7.

Chapter(s)	Date / Version	Changes Made	Comments
1	February 2005, v1.0	Initial Release.	
2	June 2006, v1.1	• Updated "Serial Loopback" section. • Updated Figures 2–1 through 2–3. • Updated Figure 2–13. • Updated Figures 2–26 and 2–27.	
	February 2005, v1.0	Initial Release.	
3	August 2005, v1.1	Added Note (3) to Figure 3-7.	
4	February 2005, v1.0	Initial Release.	
5	February 2005, v1.0	Initial Release.	
6	June 2006, v1.2	• Updated "Operating Conditions" section. • Updated Table 6–4. • Updated note 3 in Table 6–6. • Added note 12 in Table 6–7. • Updated Figure 6–1. • Added Figure 6–2. • Updated Tables 6–13 through 6–16.	• Changed V_{OD} to V_{ID} for receiver input voltage and `refclkb` input voltage in Table 6–4. • Changed value for undershoot during transition from -0.5 V to -2.0 V in note 3 of Table 6–6. • Changed value of V_{OCM} from mV to V in Table 6–15. • Changed unit value of W to Ω.
	August 2005, v1.1	Updated Tables 6-7 and 6-50.	
7	February 2005, v1.0	Initial Release.	

EP1SGX25DF1020C7 Intel IC FPGA 607 I/O 1020FBGA

1. Introduction to the Stratix GX Device Data Sheet

SGX51001-1.0

Overview

The Stratix® GX family of devices is Altera's second FPGA family to combine high-speed serial transceivers with a scalable, high-performance logic array. Stratix GX devices include 4 to 20 high-speed transceiver channels, each incorporating clock data recovery (CDR) technology and embedded SERDES capability at data rates of up to 3.1875 gigabits per second (Gbps). These transceivers are grouped by four-channel transceiver blocks, and are designed for low power consumption and small die size. The Stratix GX FPGA technology is built upon the Stratix architecture, and offers a 1.5-V logic array with unmatched performance, flexibility, and time-to-market capabilities. This scalable, high-performance architecture makes Stratix GX devices ideal for high-speed backplane interface, chip-to-chip, and communications protocol-bridging applications.

Features

- Transceiver block features are as follows:
  - High-speed serial transceiver channels with CDR provides 500-megabits per second (Mbps) to 3.1875-Gbps full-duplex operation
  - Devices are available with 4, 8, 16, or 20 high-speed serial transceiver channels providing up to 127.5 Gbps of full-duplex serial bandwidth
  - Support for transceiver-based protocols, including 10 Gigabit Ethernet attachment unit interface (XAUI), Gigabit Ethernet (GigE), and SONET/SDH
  - Compatible with PCI Express, SMPTE 292M, Fibre Channel, and Serial RapidIO I/O standards
  - Programmable differential output voltage (V_{OD}), pre-emphasis, and equalization settings for improved signal integrity
  - Individual transmitter and receiver channel power-down capability implemented automatically by the Quartus® II software for reduced power consumption during non-operation
  - Programmable transceiver-to-FPGA interface with support for 8-, 10-, 16-, and 20-bit wide data paths
  - 1.5-V pseudo current mode logic (PCML) for 500 Mbps to 3.1875 Gbps
  - Support for LVDS, LVPECL, and 3.3-V PCML on reference clocks and receiver input pins (AC-coupled)
  - Built-in self test (BIST)
  - Hot insertion/removal protection circuitry

EP1SGX25DF1020C7 Intel IC FPGA 607 I/O 1020FBGA

- Pattern detector and word aligner supports programmable patterns
- 8B/10B encoder/decoder performs 8- to 10-bit encoding and 10- to 8-bit decoding
- Rate matcher compliant with IEEE 802.3-2002 for GigE mode and with IEEE 802-3ae for XAUI mode
- Channel bonding compliant with IEEE 802.3ae (for XAUI mode only)
- Device can bypass some transceiver block features if necessary

- FPGA features are as follows:
  - 10,570 to 41,250 logic elements (LEs); see Table 1–1
  - Up to 3,423,744 RAM bits (427,968 bytes) available without reducing logic resources
  - TriMatrix™ memory consisting of three RAM block sizes to implement true dual-port memory and first-in-out (FIFO) buffers
  - Up to 16 global clock networks with up to 22 regional clock networks per device region
  - High-speed DSP blocks provide dedicated implementation of multipliers (faster than 300 MHz), multiply-accumulate functions, and finite impulse response (FIR) filters
  - Up to eight general usage phase-locked loops (four enhanced PLLs and four fast PLLs) per device provide spread spectrum, programmable bandwidth, clock switchover, real-time PLL reconfiguration, and advanced multiplication and phase shifting
  - Support for numerous single-ended and differential I/O standards
  - High-speed source-synchronous differential I/O support on up to 45 channels for 1-Gbps performance
  - Support for source-synchronous bus standards, including 10-Gigabit Ethernet XSBI, Parallel RapidIO, UTOPIA IV, Network Packet Streaming Interface (NPSI), HyperTransport™ technology, SPI-4 Phase 2 (POS-PHY Level 4), and SFI-4
  - Support for high-speed external memory, including zero bus turnaround (ZBT) SRAM, quad data rate (QDR and QDRII) SRAM, double data rate (DDR) SDRAM, DDR fast cycle RAM (FCRAM), and single data rate (SDR) SDRAM
  - Support for multiple intellectual property megafunctions from Altera® MegaCore® functions and Altera Megafunction Partners Program (AMPP℠) megafunctions
  - Support for remote configuration updates
  - Dynamic phase alignment on LVDS receiver channels

EP1SGX25DF1020C7 Intel IC FPGA 607 I/O 1020FBGA

Table 1–1. Stratix GX Device Features

Feature	EP1SGX10C EP1SGX10D	EP1SGX25C EP1SGX25D EP1SGX25F	EP1SGX40D EP1SGX40G
LEs	10,570	25,660	41,250
Transceiver channels	4, 8	4, 8, 16	8, 20
Source-synchronous channels	22	39	45
M512 RAM blocks (32 × 18 bits)	94	224	384
M4K RAM blocks (128 × 36 bits)	60	138	183
M-RAM blocks (4K ×144 bits)	1	2	4
Total RAM bits	920,448	1,944,576	3,423,744
Digital signal processing (DSP) blocks	6	10	14
Embedded multipliers *(1)*	48	80	112
PLLs	4	4	8

Note to Table 1–1:

(1) This parameter lists the total number of 9- × 9-bit multipliers for each device. For the total number of 18- × 18-bit multipliers per device, divide the total number of 9- × 9-bit multipliers by 2. For the total number of 36- × 36-bit multipliers per device, decide the total number of 9- × 9-bit multipliers by 8.

Stratix GX devices are available in space-saving FineLine BGA® packages (refer to Tables 1–2 and 1–3), and in multiple speed grades (refer to Table 1–4). Stratix GX devices support vertical migration within the same package (that is, you can migrate between the EP1SGX10C and EP1SGX25C devices in the 672-pin FineLine BGA package). See the Stratix GX device pin tables for more information. Vertical migration means that you can migrate to devices whose dedicated pins, configuration pins, and power pins are the same for a given package across device densities. For I/O pin migration across densities, you must cross-reference the available I/O pins using the device pin-outs for all planned densities of a given package type, to identify which I/O pins it is possible to migrate. The Quartus II software can automatically cross reference and place all pins for migration when given a device migration list.

Table 1–2. Stratix GX Package Options & I/O Pin Counts (Part 1 of 2) *Note (1)*

Device	672-Pin FineLine BGA	1,020-Pin FineLine BGA
EP1SGX10C	362	
EP1SGX10D	362	
EP1SGX25C	455	

EP1SGX25DF1020C7 Intel IC FPGA 607 I/O 1020FBGA

Table 1–2. Stratix GX Package Options & I/O Pin Counts (Part 2 of 2) *Note (1)*

Device	672-Pin FineLine BGA	1,020-Pin FineLine BGA
EP1SGX25D	455	607
EP1SGX25F		607
EP1SGX40D		624
EP1SGX40G		624

Note to Table 1–2:

(1) The number of I/O pins listed for each package includes dedicated clock pins and dedicated fast I/O pins. However, these numbers do not include high-speed or clock reference pins for high-speed I/O standards.

Table 1–3. Stratix GX FineLine BGA Package Sizes

Dimension	672 Pin	1,020 Pin
Pitch (mm)	1.00	1.00
Area (mm^2)	729	1,089
Length × width (mm × mm)	27 × 27	33 × 33

Table 1–4. Stratix GX Device Speed Grades

Device	672-Pin FineLine BGA	1,020-pin FineLine BGA
EP1SGX10	-5, -6, -7	
EP1SGX25	-5, -6, -7	-5, -6, -7
EP1SGX40		-5, -6, -7

High-Speed I/O Interface Functional Description

The Stratix GX device family supports high-speed serial transceiver blocks with CDR circuitry as well as source-synchronous interfaces. The channels on the right side of the device use an embedded circuit dedicated for receiving and transmitting high-speed serial data streams to and from the system board. These channels are clustered in a four-channel serial transceiver building block and deliver high-speed bidirectional point-to-point data transmissions to provide up to 3.1875 Gbps of full-duplex data transmission per channel. The channels on the left side of the device support source-synchronous data transfers at up to 1 Gbps using LVDS, LVPECL, 3.3-V PCML, or HyperTransport technology I/O standards. Figure 1–1 shows the Stratix GX I/O blocks. The differential source-synchronous serial interface and the high-speed serial interface are described in the *Stratix GX Transceivers* chapter of the *Stratix GX Device Handbook, Volume 1*.

Figure 1–1. Stratix GX I/O Blocks *Note (1)*

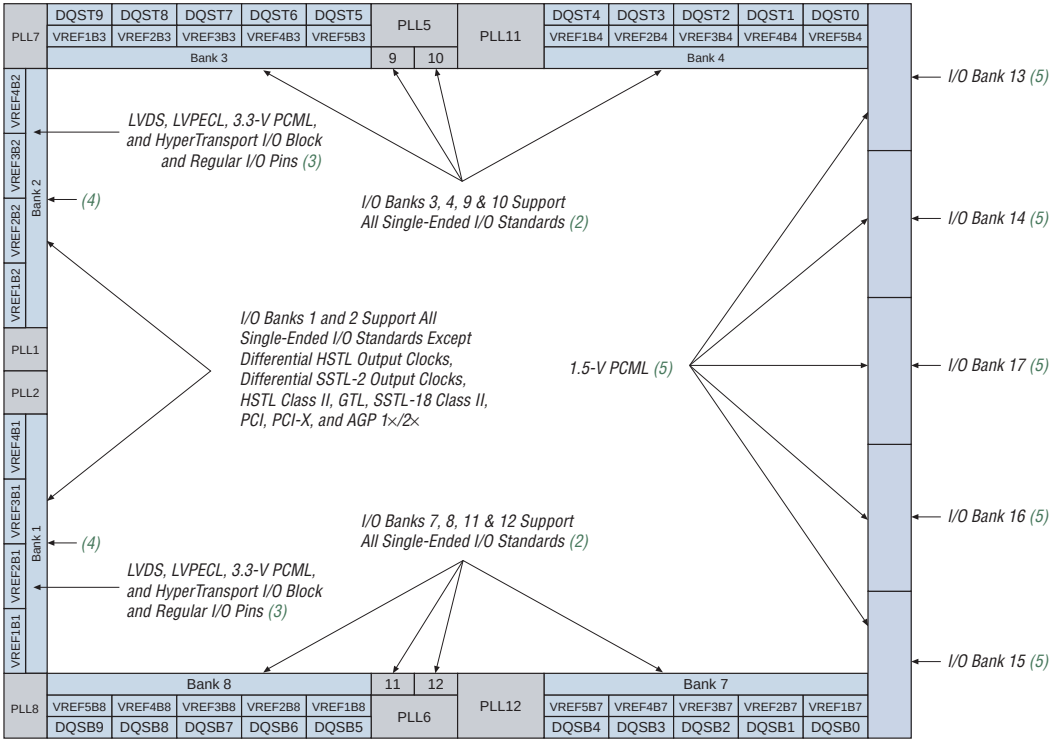

Notes to Figure 1–1:

(1) Figure 1–1 is a top view of the Stratix GX silicon die.

(2) Banks 9 through 12 are enhanced PLL external clock output banks.

(3) If the high-speed differential I/O pins are not used for high-speed differential signaling, they can support all of the I/O standards except HSTL class I and II, GTL, SSTL-18 Class II, PCI, PCI-X, and AGP 1×/2×.

(4) For guidelines for placing single-ended I/O pads next to differential I/O pads, see the *Selectable I/O Standards in Stratix & Stratix GX Devices* chapter of the *Stratix GX Device Handbook, Volume 2*.

(5) These I/O banks in Stratix GX devices also support the LVDS, LVPECL, and 3.3-V PCML I/O standards on reference clocks and receiver input pins (AC coupled).

FPGA Functional Description

Stratix GX devices contain a two-dimensional row- and column-based architecture to implement custom logic. A series of column and row interconnects of varying length and speed provide signal interconnects between logic array blocks (LABs), memory block structures, and DSP blocks.

EP1SGX25DF1020C7 Intel IC FPGA 607 I/O 1020FBGA

The logic array consists of LABs, with 10 logic elements (LEs) in each LAB. An LE is a small unit of logic providing efficient implementation of user logic functions. LABs are grouped into rows and columns across the device.

M512 RAM blocks are simple dual-port memory blocks with 512 bits plus parity (576 bits). These blocks provide dedicated simple dual-port or single-port memory up to 18-bits wide at up to 318 MHz. M512 blocks are grouped into columns across the device in between certain LABs.

M4K RAM blocks are true dual-port memory blocks with 4K bits plus parity (4,608 bits). These blocks provide dedicated true dual-port, simple dual-port, or single-port memory up to 36-bits wide at up to 291 MHz. These blocks are grouped into columns across the device in between certain LABs.

M-RAM blocks are true dual-port memory blocks with 512K bits plus parity (589,824 bits). These blocks provide dedicated true dual-port, simple dual-port, or single-port memory up to 144-bits wide at up to 269 MHz. Several M-RAM blocks are located individually or in pairs within the device's logic array.

Digital signal processing (DSP) blocks can implement up to either eight full-precision 9 × 9-bit multipliers, four full-precision 18 × 18-bit multipliers, or one full-precision 36 × 36-bit multiplier with add or subtract features. These blocks also contain 18-bit input shift registers for digital signal processing applications, including FIR and infinite impulse response (IIR) filters. DSP blocks are grouped into two columns in each device.

Each Stratix GX device I/O pin is fed by an I/O element (IOE) located at the end of LAB rows and columns around the periphery of the device. I/O pins support numerous single-ended and differential I/O standards. Each IOE contains a bidirectional I/O buffer and six registers for registering input, output, and output-enable signals. When used with dedicated clocks, these registers provide exceptional performance and interface support with external memory devices such as DDR SDRAM, FCRAM, ZBT, and QDR SRAM devices.

High-speed serial interface channels support transfers at up to 840 Mbps using LVDS, LVPECL, 3.3-V PCML, or HyperTransport technology I/O standards.

Figure 1–2 shows an overview of the Stratix GX device.

Figure 1–2. Stratix GX Block Diagram

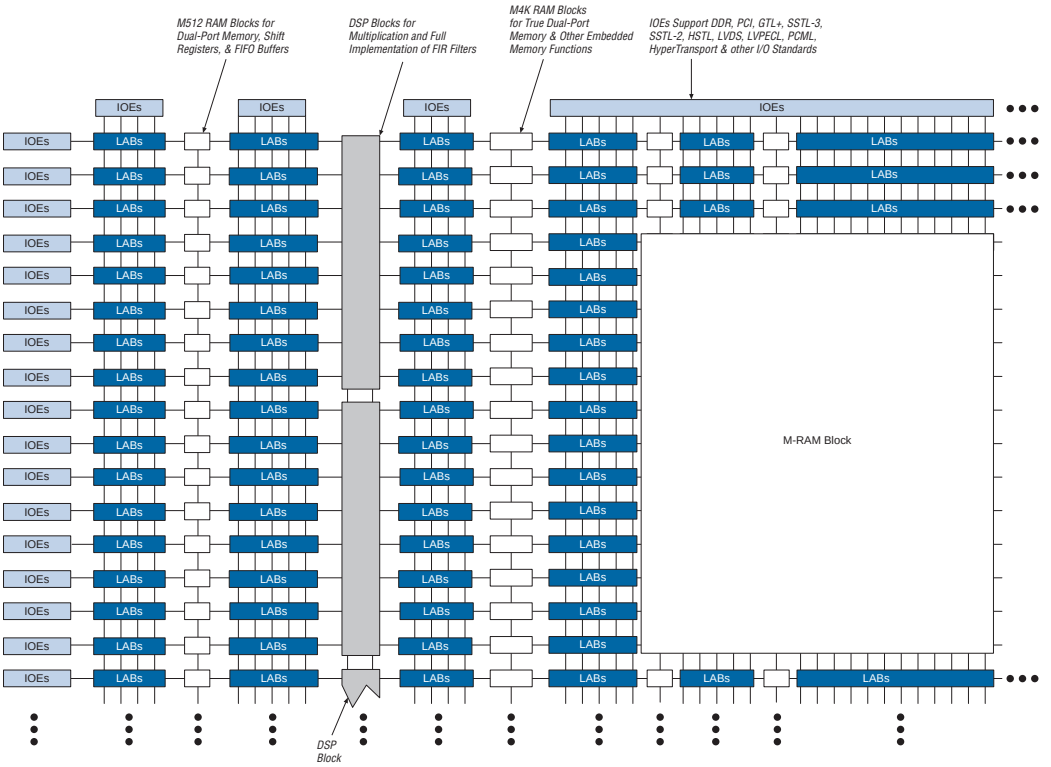

The number of M512 RAM, M4K RAM, and DSP blocks varies by device along with row and column numbers and M-RAM blocks. Table 1–5 lists the resources available in Stratix GX devices.

Table 1–5. Stratix GX Device Resources

Device	M512 RAM Columns/Blocks	M4K RAM Columns/Blocks	M-RAM Blocks	DSP Block Columns/Blocks	LAB Columns	LAB Rows
EP1SGX10	4 / 94	2 / 60	1	2 / 6	40	30
EP1SGX25	6 / 224	3 / 138	2	2 / 10	62	46
EP1SGX40	8 / 384	3 / 183	4	2 / 14	77	61

EP1SGX25DF1020C7 Intel IC FPGA 607 I/O 1020FBGA

2. Stratix GX Transceivers

SGX51002-1.1

Transceiver Blocks

Stratix® GX devices incorporate dedicated embedded circuitry on the right side of the device, which contains up to 20 high-speed 3.1875-Gbps serial transceiver channels. Each Stratix GX transceiver block contains four full-duplex channels and supporting logic to transmit and receive high-speed serial data streams. The transceiver block uses the channels to deliver bidirectional point-to-point data transmissions with up to 3.1875 Gbps of data transition per channel.

There are up to 20 transceiver channels available on a single Stratix GX device. Table 2–1 shows the number of transceiver channels available on each Stratix GX device.

Table 2–1. Stratix GX Transceiver Channels

Device	Number of Transceiver Channels
EP1SGX10C	4
EP1SGX10D	8
EP1SGX25C	4
EP1SGX25D	8
EP1SGX25F	16
EP1SGX40D	8
EP1SGX40G	20

Figure 2–1 shows the elements of the transceiver block, including the four channels, supporting logic, and I/O buffers. Each transceiver channel consists of a receiver and transmitter. The supporting logic contains a transmitter PLL to generate a high-speed clock used by the four transmitters. The receiver PLL within each transceiver channel generates the receiver reference clocks. The supporting logic also contains state machines to manage rate matching for XAUI and GIGE applications, in addition to channel bonding for XAUI applications.

Figure 2–1. Stratix GX Transceiver Block *Note (1)*

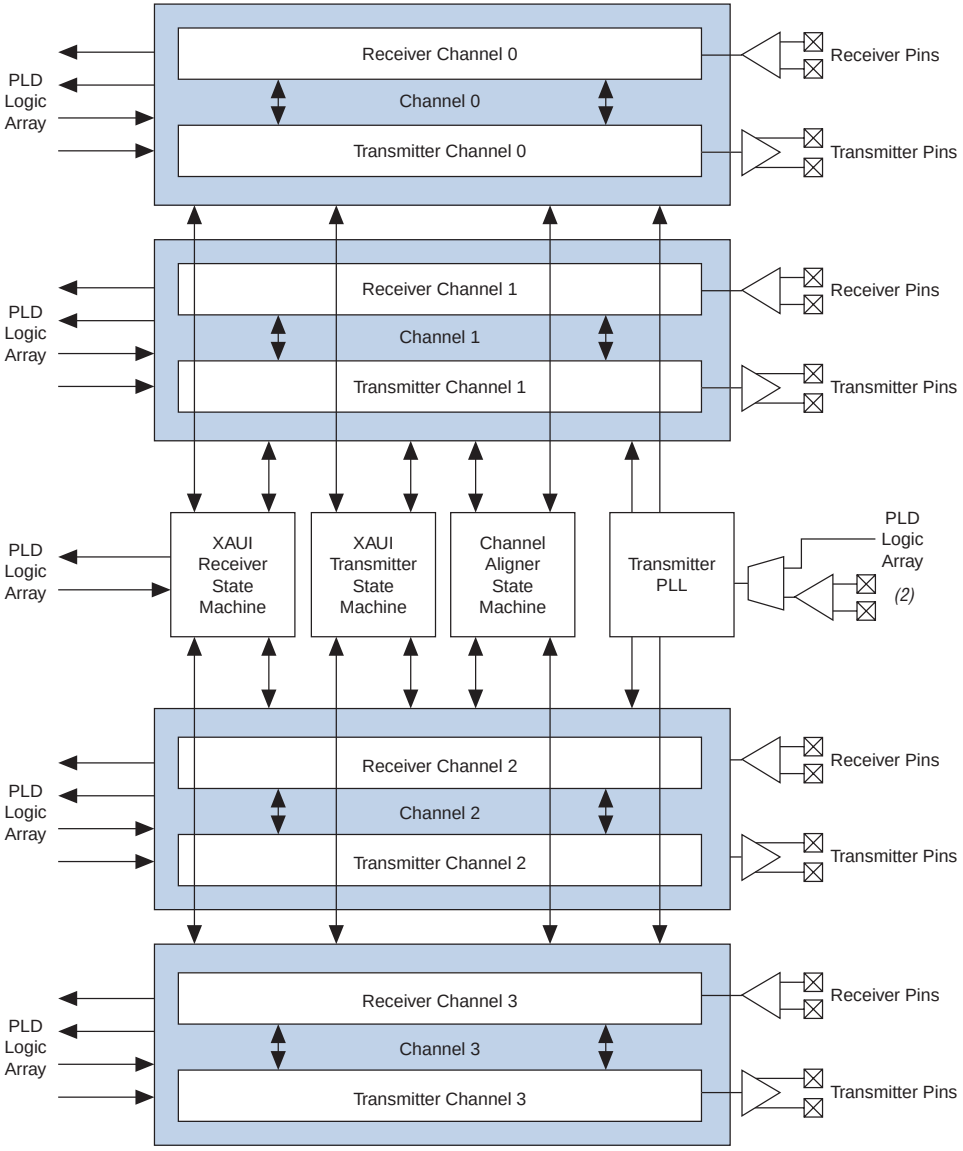

Notes to Figure 2–1:

(1) Each receiver channel has its own PLL and CRU, which are not shown in this diagram. For more information, refer to the section "Receiver Path" on page 2–13.

(2) For possible transmitter PLL clock inputs, refer to the section "Transmitter Path" on page 2–5.

EP1SGX25DF1020C7 Intel IC FPGA 607 I/O 1020FBGA

Each Stratix GX transceiver channel consists of a transmitter and receiver. The transmitter contains the following:

- Transmitter PLL
- Transmitter phase compensation FIFO buffer
- Byte serializer
- 8B/10B encoder
- Serializer (parallel to serial converter)
- Transmitter output buffer

The receiver contains the following:

- Input buffer
- Clock recovery unit (CRU)
- Deserializer
- Pattern detector and word aligner
- Rate matcher and channel aligner
- 8B/10B decoder
- Receiver logic array interface

You can set all the Stratix GX transceiver functions through the Quartus II software. You can set programmable pre-emphasis, programmable equalizer, and programmable V_{OD} dynamically as well. Each Stratix GX transceiver channel is also capable of BIST generation and verification in addition to various loopback modes. Figure 2–2 shows the block diagram for the Stratix GX transceiver channel.

Stratix GX transceivers provide physical coding sublayer (PCS) and physical media attachment (PMA) implementation for protocols such as 10-gigabit XAUI and GIGE. The PCS portion of the transceiver consists of the logic array interface, 8B/10B encoder/decoder, pattern detector, word aligner, rate matcher, channel aligner, and the BIST and pseudo-random binary sequence pattern generator/verifier. The PMA portion of the transceiver consists of the serializer/deserializer, the CRU, and the I/O buffers.

Figure 2–2. Stratix GX Transceiver ChanneL *Note (1)*

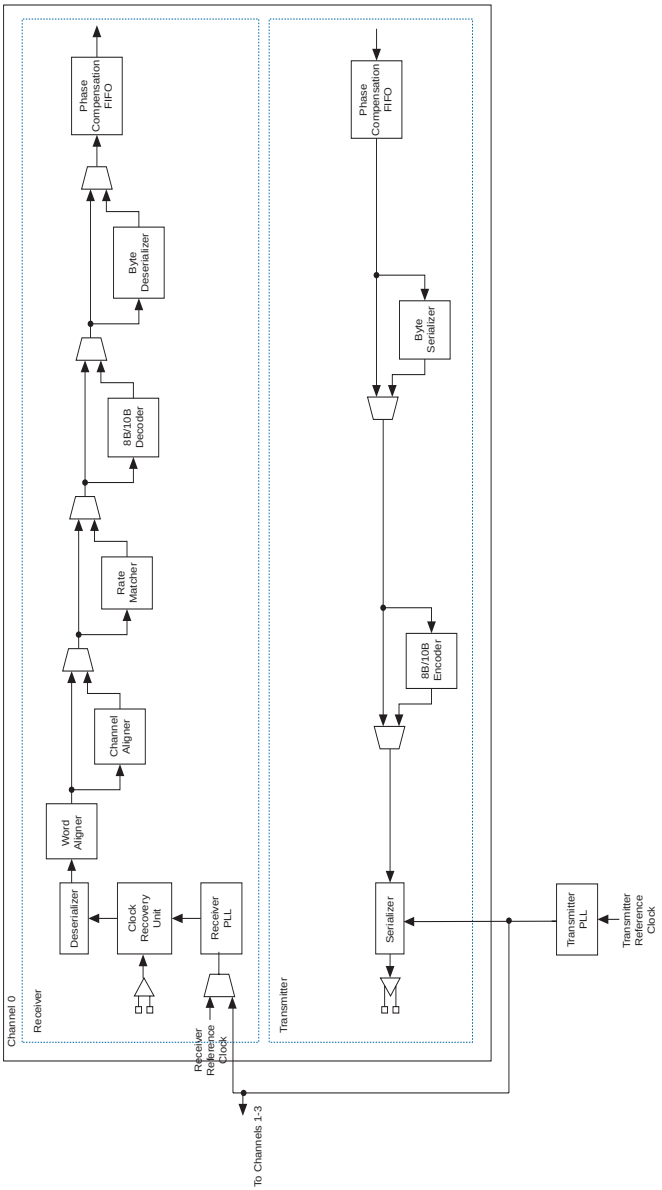

Note to Figure 2–2:
(1) There are four transceiver channels in a transceiver block.

EP1SGX25DF1020C7 Intel IC FPGA 607 I/O 1020FBGA

Transmitter Path

This section describes the data path through the Stratix GX transmitter (see Figure 2–2). Data travels through the Stratix GX transmitter via the following modules:

- Transmitter PLL
- Transmitter phase compensation FIFO buffer
- Byte serializer
- 8B/10B encoder
- Serializer (parallel to serial converter)
- Transmitter output buffer

Transmitter PLL

Each transceiver block has one transmitter PLL, which receives the reference clock and generates the following signals:

- High-speed serial clock used by the serializer
- Slow-speed reference clock used by the receiver
- Slow-speed clock used by the logic array (divisible by two for double-width mode)

The INCLK clock is the input into the transmitter PLL. There is one INCLK clock per transceiver block. This clock can be fed by either the REFCLKB pin, PLD routing, or the inter-transceiver routing line. See the section "Stratix GX Clocking" on page 2–30 for more information about the inter-transceiver lines.

The transmitter PLL in each transceiver block clocks the circuits in the transmit path. The transmitter PLL is also used to train the receiver PLL. If no transmit channels are used in the transceiver block, the transmitter PLL can be turned off. Figure 2–3 is a block diagram of the transmitter PLL.

Figure 2–3. Transmitter PLL Block Diagram *Note (1)*

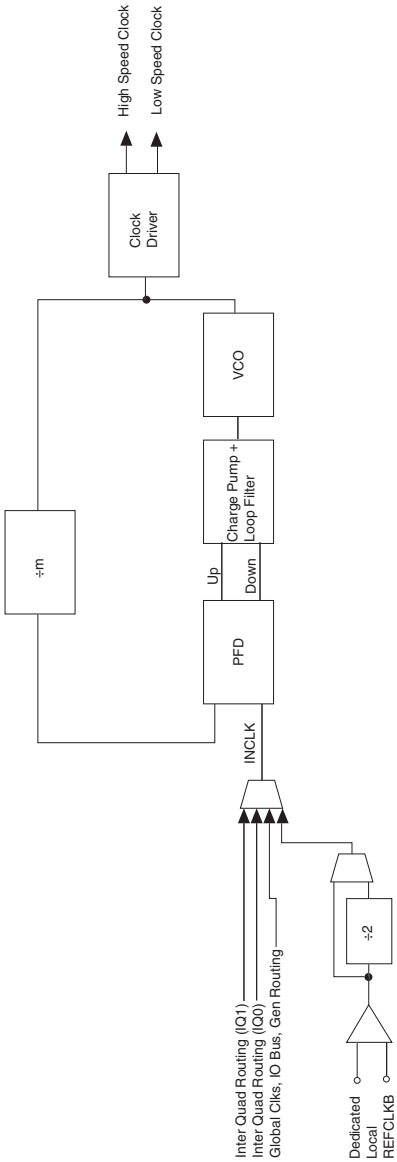

Note to Figure 2–3:
(1) The divider in the PLL divides by 4, 8, 10, 16, or 20.

EP1SGX25DF1020C7 Intel IC FPGA 607 I/O 1020FBGA

The transmitter PLL can support up to 3.1875 Mbps. The input clock frequency for –5 and –6 speed grade devices is limited to 650 MHz if you use the REFCLKB pin or to 325 MHz if you use the other clock routing resources. For –7 speed grade devices, the maximum input clock frequency is 312.5 MHz with the REFCLKB pin, and the maximum is 156.25 MHz for all other clock routing resources. An optional PLL_LOCKED port is available to indicate whether the transmitter PLL is locked to the reference clock. The transmitter PLL has a programmable loop bandwidth that can be set to low or high. The loop bandwidth parameter can be statically set in the Quartus II software.

Table 2–2 lists the adjustable parameters in the transmitter PLL.

Table 2–2. Transmitter PLL Specifications

Parameter	Specifications
Input reference frequency range	25 MHz to 650 MHz
Data rate support	500 Mbps to 3.1875 Gbps
Multiplication factor (W)	2, 4, 5, 8, 10, 16, or 20 *(1)*
Bandwidth	Low, high

Note to Table 2–2:
(1) Multiplication factors 2 and 5 can only be achieved with the use of the pre-divider on the REFCLKB pin.

Transmitter Phase Compensation FIFO Buffer

The transmitter phase compensation FIFO buffer resides in the transceiver block at the PLD boundary. This FIFO buffer compensates for the phase differences between the transmitter reference clock (inclk) and the PLD interface clock (tx_coreclk). The phase difference between the two clocks must be less than 360° . The PLD interface clock must also be frequency locked to the transmitter reference clock. The phase compensation FIFO buffer is four words deep and cannot be bypassed.

Byte Serializer

The byte serializer takes double-width words (16 or 20 bits) from the PLD interface and converts them to a single width word (8 or 10 bits) for use in the transceiver. The transmit data path after the byte serializer is single width (8 or 10 bits). The byte serializer is bypassed when single width mode (8 or 10 bits) is used at the PLD interface.

8B/10B Encoder

The 8B/10B encoder translates 8-bit wide data + 1 control enable bit into a 10-bit encoded data. The encoded data has a maximum run length of 5. The 8B/10B encoder can be bypassed. Figure 2–4 diagrams the encoding process.

Figure 2–4. Encoding Process

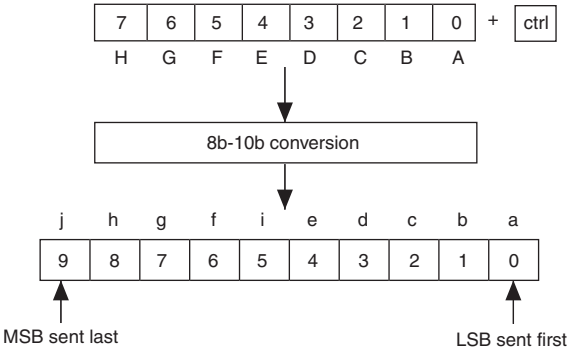

Transmit State Machine

The transmit state machine operates in either XAUI mode or in GIGE mode, depending on the protocol used.

GIGE Mode

In GIGE mode, the transmit state machines convert all idle ordered sets (/K28.5/, /Dx.y/) to either /I1/ or /I2/ ordered sets. /I1/ consists of a negative-ending disparity /K28.5/ (denoted by /K28.5/-) followed by a neutral /D5.6/. /I2/ consists of a positive-ending disparity /K28.5/ (denoted by /K28.5/+) and a negative-ending disparity /D16.2/ (denoted by /D16.2/-). The transmit state machines do not convert any of the ordered sets to match /C1/ or /C2/, which are the configuration ordered sets. (/C1/ and /C2/ are defined by (/K28.5/, /D21.5/) and (/K28.5/, /D2.2/), respectively.) Both the /I1/ and /I2/ ordered sets guarantee a negative-ending disparity after each ordered set. The GIGE transmit state machine can be statically disabled in the Quartus II software, even if using the GIGE protocol mode.

EP1SGX25DF1020C7 Intel IC FPGA 607 I/O 1020FBGA

XAUI Mode

The transmit state machine translates the XAUI XGMII code group to the XAUI PCS code group. Table 2–3 shows the code conversion.

Table 2–3. Code Conversion

XGMII TXC	XGMII TXD	PCS Code-Group	Description
0	00 through FF	Dxx.y	Normal data
1	07	K28.0 or K28.3 or K28.5	Idle in ||**I**||
1	07	K28.5	Idle in ||**T**||
1	9C	K28.4	Sequence
1	FB	K27.7	Start
1	FD	K29.7	Terminate
1	FE	K30.7	Error
1	See IEEE 802.3 reserved code groups	See IEEE 802.3 reserved code groups	Reserved code groups
1	Other value	K30.7	Invalid XGMII character

The XAUI PCS idle code groups, /K28.0/ (/R/) and /K28.5/ (/K/), are automatically randomized based on a PRBS7 pattern with an x^7+x^6+1 polynomial. The /K28.3/ (/A/) code group is automatically generated between 16 and 31 idle code groups. The idle randomization on the /A/, /K/, and /R/ code groups are done automatically by the transmit state machine.

Serializer (Parallel-to-Serial Converter)

The serializer converts the parallel 8-bit or 10-bit data into a serial stream, transmitting the LSB first. The serialized stream is then fed to the transmit buffer. Figure 2–5 is a diagram of the serializer.

Figure 2–5. Serializer

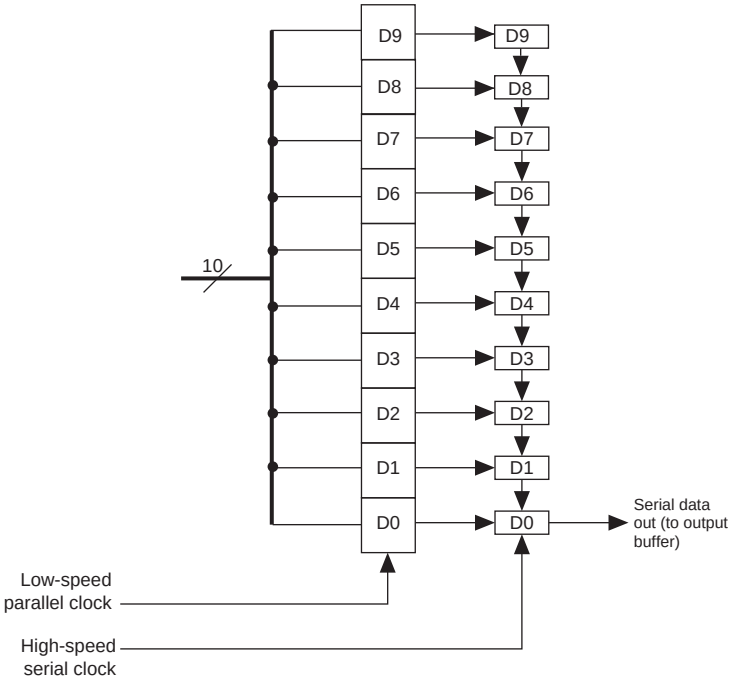

Transmit Buffer

The Stratix GX transceiver buffers support the 1.5-V pseudo current mode logic (PCML) I/O standard at a rate up to 3.1875 Gbps, across up to 40 inches of FR4 trace, and across 2 connectors. Additional I/O standards, LVDS, 3.3-V PCML, LVPECL, can be supported when AC coupled. The common mode of the output driver is 750 mV.

The output buffer, as shown in Figure 2–6, consists of a programmable output driver and a programmable pre-emphasis circuit.

EP1SGX25DF1020C7 Intel IC FPGA 607 I/O 1020FBGA

Figure 2–6. Output Buffer

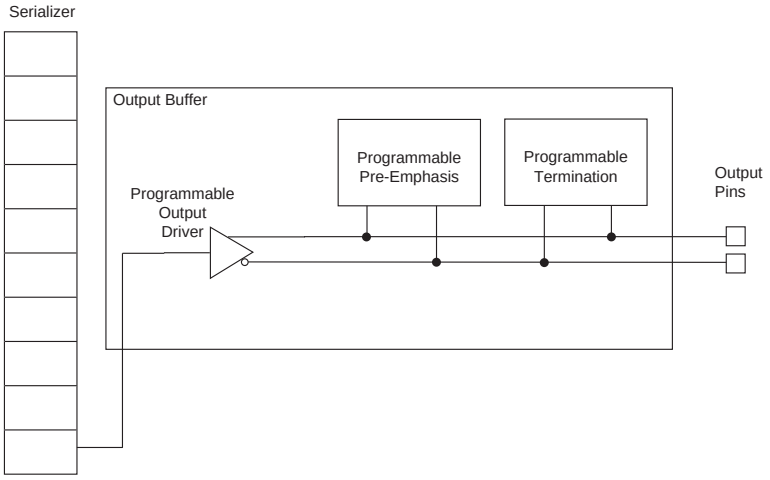

Programmable Output Driver

The programmable output driver can be set to drive out 400 to 1,600 mV. Table 2–4 shows the available settings for each termination value. The V_{OD} can be dynamically or statically set. The output driver requires either internal or external termination at the source.

Table 2–4. Programmable V_{OD} (Differential) *Note (1)*

Termination Setting (Ω)	V_{OD} Setting (mV)
100	400, 800, 1000, 1200, 1400, 1600
120	480, 960, 1200, 1440
150	600, 1200, 1500

Note to Table 2–4:

(1) V_{OD} differential is measured as $V_A - V_B$ (see Figure 2–7).

Figure 2–7. V_{OD} Differential

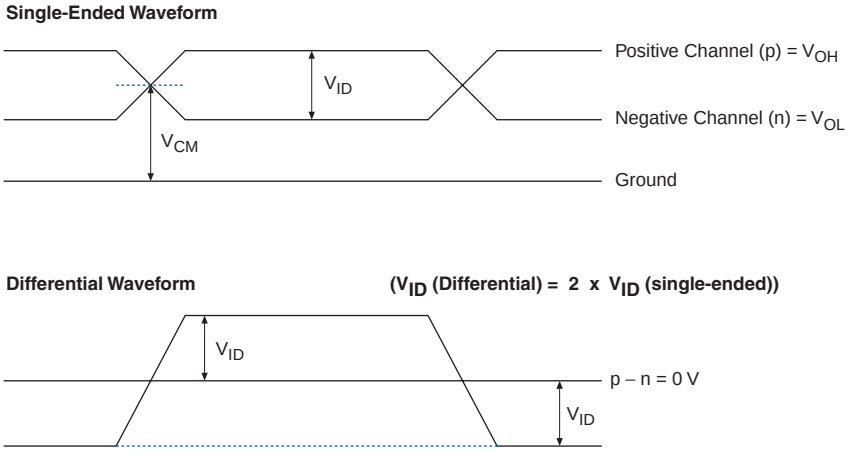

Programmable Pre-Emphasis

The programmable pre-emphasis module controls the output driver to boost the high frequency components, to compensate for losses in the transmission medium, as shown in Figure 2–8. The pre-emphasis can be dynamically or statically set. There are five possible pre-emphasis settings (1 through 5), with 5 being the highest and 0 being no pre-emphasis.

Figure 2–8. Programmable Pre-Emphasis Model

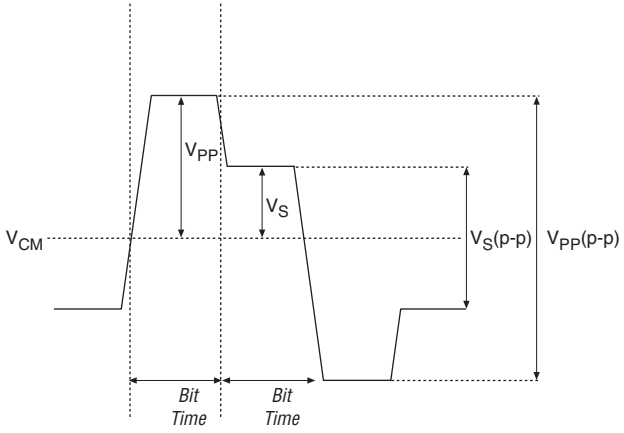

EP1SGX25DF1020C7 Intel IC FPGA 607 I/O 1020FBGA

Pre-emphasis percentage is defined as $V_{PP}/V_S - 1$, where V_{PP} is the differential emphasized voltage (peak-to-peak) and V_S is the differential steady-state voltage (peak-to-peak).

Programmable Transmitter Termination

The programmable termination can be statically set in the Quartus II software. The values are 100 Ω, 120 Ω, 150 Ω, and off. Figure 2–9 shows the setup for programmable termination.

Figure 2–9. Programmable Transmitter Termination

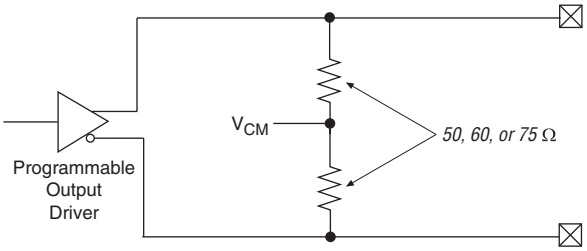

Receiver Path

This section describes the data path through the Stratix GX receiver (refer to Figure 2–2 on page 2–4). Data travels through the Stratix GX receiver via the following modules:

- Input buffer
- Clock Recovery Unit (CRU)
- Deserializer
- Pattern detector and word aligner
- Rate matcher and channel aligner
- 8B/10B decoder
- Receiver logic array interface

Receiver Input Buffer

The Stratix GX receiver input buffer supports the 1.5-V PCML I/O standard at a rate up to 3.1875 Gbps. Additional I/O standards, LVDS, 3.3-V PCML, and LVPECL can be supported when AC coupled. The common mode of the input buffer is 1.1 V. The receiver can support Stratix GX-to-Stratix GX DC coupling.

Figure 2–10 shows a diagram of the receiver input buffer, which contains:

- Programmable termination
- Programmable equalizer

Figure 2–10. Receiver Input Buffer

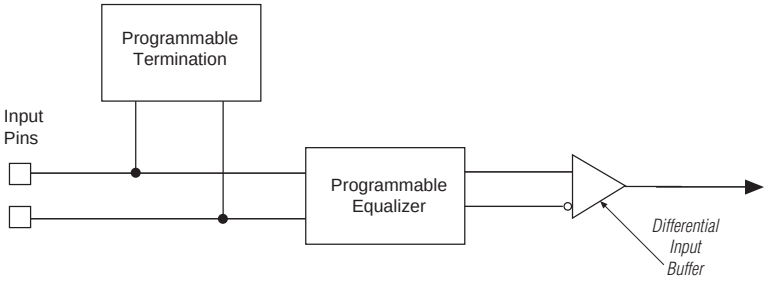

Programmable Termination

The programmable termination can be statically set in the Quartus II software. Figure 2–11 shows the setup for programmable receiver termination.

Figure 2–11. Programmable Receiver Termination

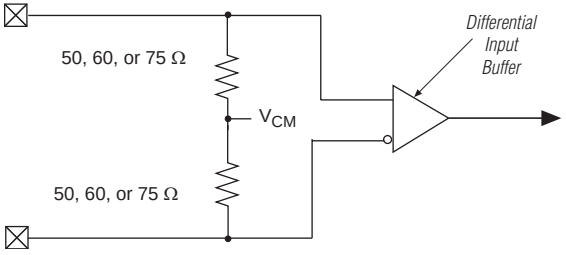

If you use external termination, then the receiver must be externally terminated and biased to 1.1 V. Figure 2–12 shows an example of an external termination/biasing circuit.

EP1SGX25DF1020C7 Intel IC FPGA 607 I/O 1020FBGA

Figure 2–12. External Termination & Biasing Circuit

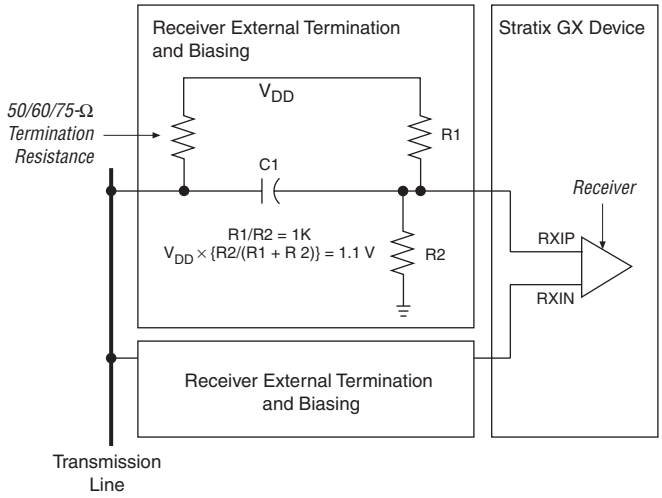

Programmable Equalizer

The programmable equalizer module boosts the high frequency components of the incoming signal to compensate for losses in the transmission medium. There are five possible equalization settings (0, 1, 2, 3, 4) to compensate for 0", 10", 20", 30", and 40" of FR4 trace. These settings should be interpreted loosely. The programmable equalizer can be set dynamically or statically.

Receiver PLL & CRU

Each transceiver block has four receiver PLLs and CRUs, each of which is dedicated to a receive channel. If the receive channel associated with a particular receiver PLL or CRU is not used, then the receiver PLL or CRU is powered down for the channel. Figure 2–13 is a diagram of the receiver PLL and CRU circuits.

Figure 2–13. Receiver PLL & CRU Circuit

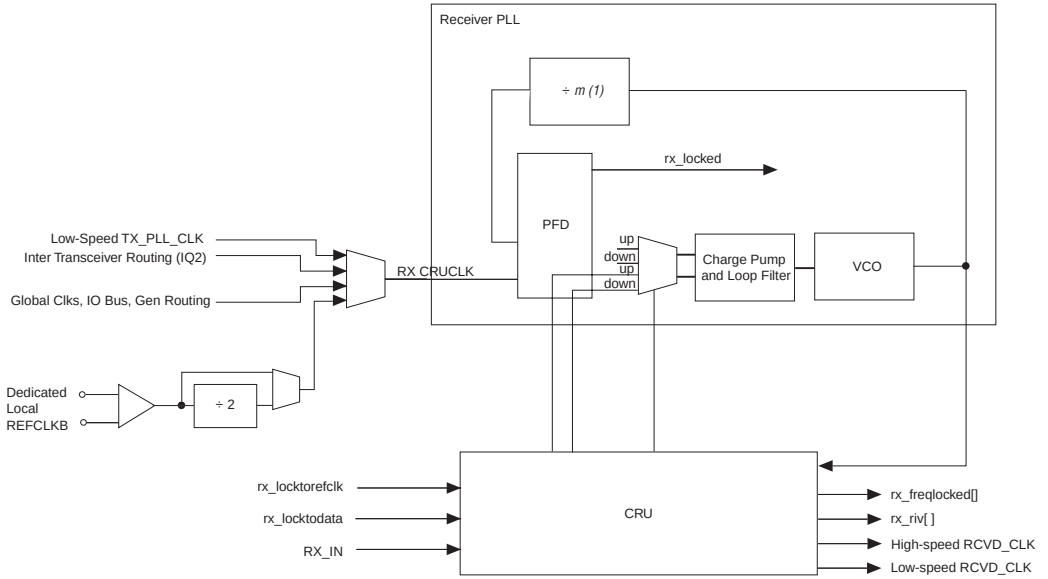

Note to Figure 2–13:
(1) m = 8, 10 16, or 20.

The receiver PLLs and CRUs are capable of supporting up to 3.1875 Gbps. The input clock frequency for –5 and –6 speed grade devices is limited to 650 MHz if you use the REFCLKB pin or 325 MHz if you use the other clock routing resources. The maximum input clock frequency for –7 speed grade devices is 312.5 MHz if you use the REFCLKB pin or 156.25 MHz with the other clock routing resources. An optional RX_LOCKED port (active low signal) is available to indicate whether the PLL is locked to the reference clock. The receiver PLL has a programmable loop bandwidth, which can be set to low, medium, or high. The loop bandwidth parameter can be statically set by the Quartus II software.

Table 2–5 lists the adjustable parameters of the receiver PLL and CRU. All the parameters listed are statically programmable in the Quartus II software.

Table 2–5. Receiver PLL & CRU Adjustable Parameters (Part 1 of 2)

Parameter	Specifications
Input reference frequency range	25 MHz to 650 MHz
Data rate support	500 Mbps to 3.1875 Gbps

EP1SGX25DF1020C7 Intel IC FPGA 607 I/O 1020FBGA

Table 2–5. Receiver PLL & CRU Adjustable Parameters (Part 2 of 2)	
Multiplication factor (W)	2, 4, 5, 8, 10, 16, or 20 *(1)*
PPM detector	125, 250, 500, 1,000
Bandwidth	Low, medium, high
Run length detector	10-bit or 20-bit mode: 5 to 160 in steps of 5
	8-bit or 16-bit mode: 4 to 128 in steps of 4

Note to Table 2–5:

(1) Multiplication factors 2, 4, and 5 can only be achieved with the use of the pre-divider on the REFCLKB port or if the CRU is trained with the low speed clock from the transmitter PLL.

The CRU has a built-in switchover circuit to select whether the voltage-controlled oscillator of the PLL is trained by the reference clock or the data. The optional port rx_freqlocked monitors when the CRU is in locked to data mode.

In the automatic mode, the following conditions must be met for the CRU to switch from locked to reference to locked to data mode:

- The CRU PLL is within the prescribed PPM frequency threshold setting (125 PPM, 250 PPM, 500 PPM, 1,000 PPM) of the CRU reference clock.
- The reference clock and CRU PLL output are phase matched (phases are within .08 UI).

The automatic switchover circuit can be overridden by using the optional ports rx_lockedtorefclk and rx_locktodata. Table 2–6 shows the possible combinations of these two signals.

Table 2–6. Possible Combinations of rx_lockedtorefclk & rx_locktodata		
rx_locktodata	**rx_lockedtorefclk**	**VCO (lock to mode)**
0	0	Auto
0	1	Reference CLK
1	x	DATA

If the rx_lockedtorefclk and rx_locktodata ports are not used, the default is auto mode.

Deserializer (Serial-to-Parallel Converter)

The deserializer converts the serial stream into a parallel 8- or 10-bit data bus. The deserializer receives the least significant bit first. Figure 2–14 is a diagram of the deserializer.

Figure 2–14. Deserializer

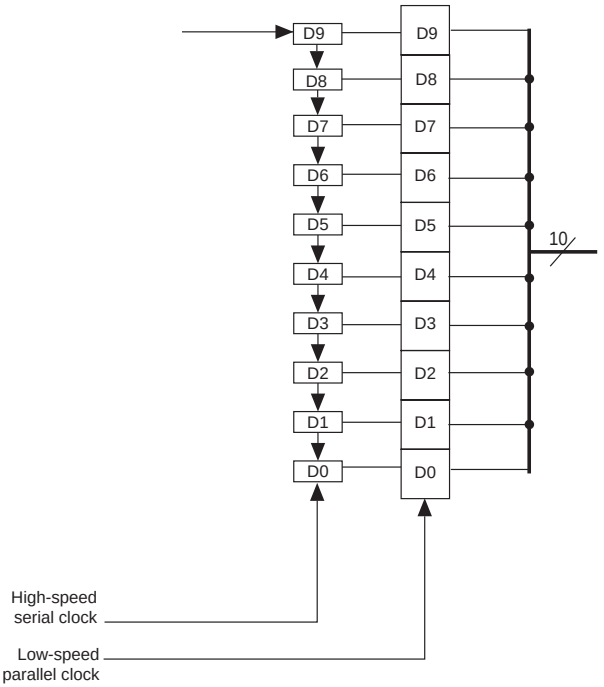

Word Aligner

The word aligner aligns the incoming data based on the specific byte boundaries. The word aligner has three customizable modes of operation: bit-slip mode, 16-bit mode, and 10-bit mode, the last of which is available for the basic and SONET modes. The word aligner also has two non-customizable modes of operation, which are the XAUI and GIGE modes.

Figure 2–15 shows the word aligner in bit-slip mode.

EP1SGX25DF1020C7 Intel IC FPGA 607 I/O 1020FBGA

Figure 2–15. Word Aligner in Bit-Slip Mode

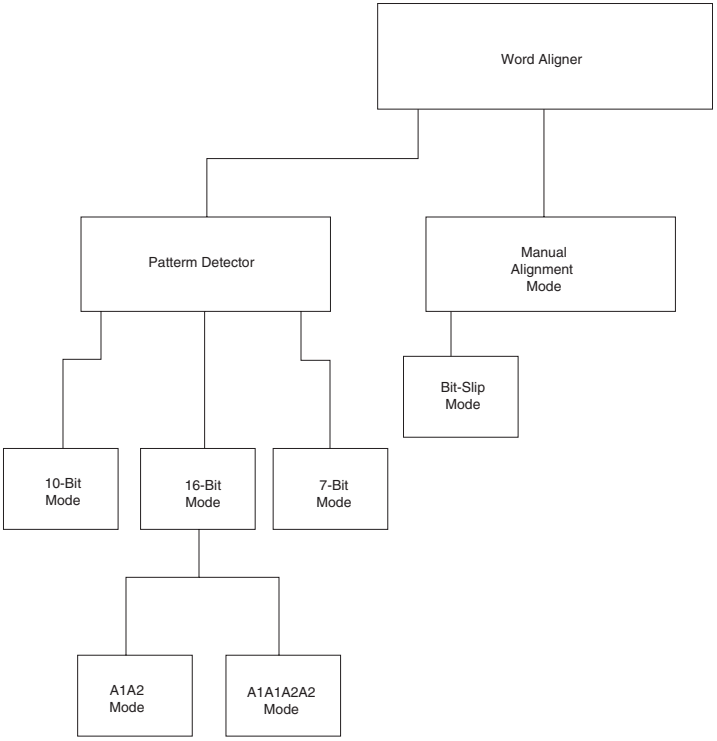

In the bit-slip mode, the byte boundary can be modified by a barrel shifter to slip the byte boundary one bit at a time via a user-controlled bit-slip port. The bit-slip mode supports both 8-bit and 10-bit data paths operating in a single or double-width mode.

The pattern detector is active in the bit-slip mode, and it detects the user-defined pattern that is specified in the MegaWizard® Plug-In Manager.

The bit-slip mode is available only in Custom mode and SONET mode.

Figure 2–16 shows the word aligner in 16-bit mode.

Figure 2–16. Word Aligner in 16-Bit Mode

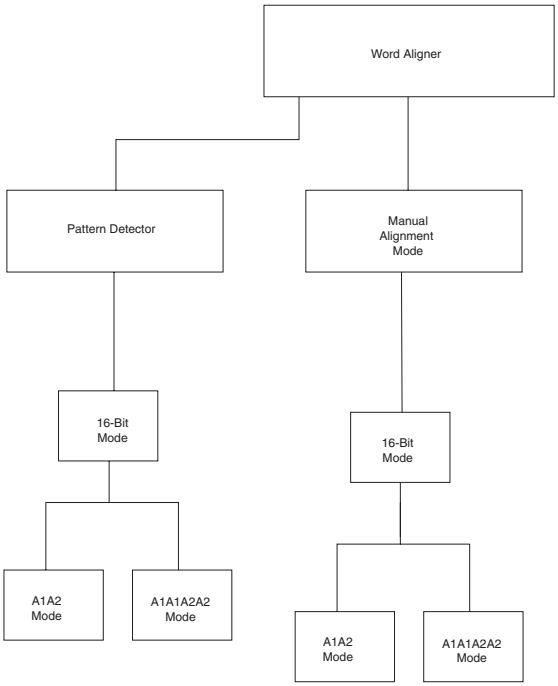

In the 16-bit mode, the word aligner and pattern detector automatically aligns and detects a user-defined 16-bit alignment pattern. This pattern can be in the format of A1A2 or A1A1A2A2 (for the SONET protocol). The re-alignment of the byte boundary can be done via a user-controlled port. The 16-bit mode supports only the 8-bit data path in a single-width or double-width mode.

The 16-bit mode is available only for the Custom mode and SONET mode. The A1A1A2A2 word alignment pattern option is available only for the SONET mode and cannot be used in the Custom mode.

Figure 2–17 shows the word aligner in 10-bit mode.

EP1SGX25DF1020C7 Intel IC FPGA 607 I/O 1020FBGA

Figure 2–17. Word Aligner in 10-Bit Mode

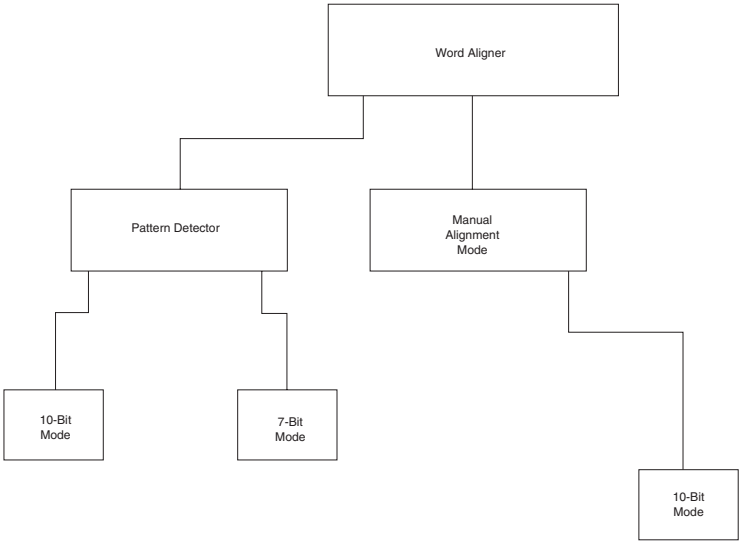

In the 10-bit mode, the word aligner automatically aligns the user's predefined 10-bit alignment pattern. The pattern detector can detect the full 10-bit pattern or only the lower seven bits of the pattern. The word aligner and pattern detector detect both the positive and the negative disparity of the pattern. A user-controlled enable port is available for the word aligner.

The 10-bit mode is available only for the Custom mode.

Figure 2–18 shows the word aligner in XAUI mode.

Figure 2–18. Word Aligner in XAUI Mode

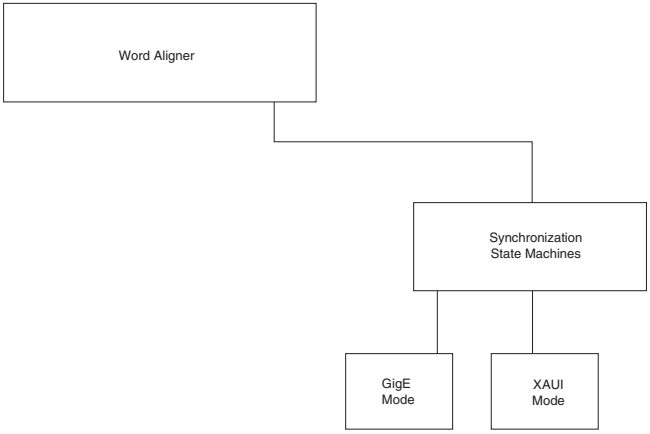

In the XAUI and GIGE modes, the word alignment is controlled by a state machine that adheres to the IEEE 802.3ae standard for XAUI and the IEEE 802.3 standard for GIGE. The alignment pattern is predefined to be a /K28.5/ code group.

The XAUI mode is available only for the XAUI protocol, and the GIGE mode is available only for the GIGE protocol.

Channel Aligner

The channel aligner is available only in XAUI mode and bonds all four channels within a transceiver. The channel aligner adheres to the IEEE 802.3ae, clause 48 specification for channel bonding.

The channel aligner is a 16-word deep FIFO buffer with a state machine overlooking the channel bonding process. The state machine looks for an /A/ (/K28.3/) in each channel and aligns all the /A/s in the transceiver. When four columns of /A/ (denoted by //A//) are detected, the rx_channelalign port goes high, signifying that all the channels in the transceiver have been bonded. The reception of four consecutive misaligned /A/s restarts the channel alignment sequence and de-asserts rx_channelalign.

Figure 2–19 shows misaligned channels before the channel aligner and the channel alignment after the channel aligner.

EP1SGX25DF1020C7 Intel IC FPGA 607 I/O 1020FBGA

Figure 2–19. Before & After the Channel Aligner

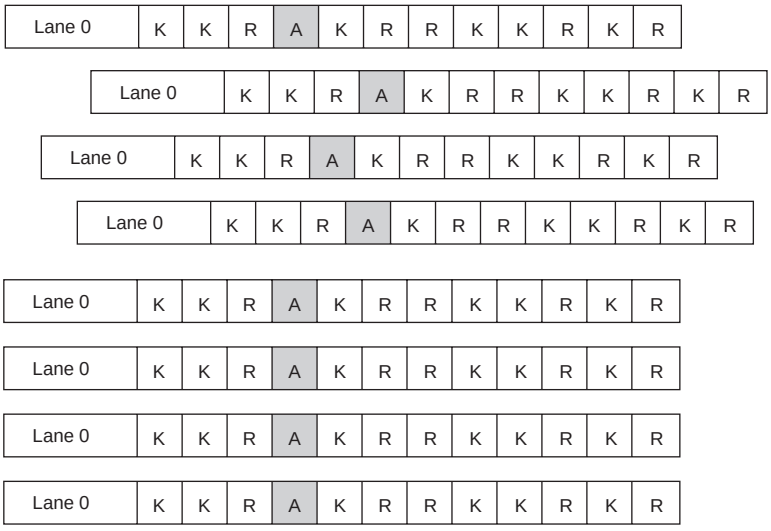

Rate Matcher

The rate matcher, which is available only in XAUI and GIGE modes, consists of a 12-word deep FIFO buffer and a FIFO controller. The rate matcher is bypassed when the device is not in XAUI or GIGE mode.

In a multi-crystal environment, the rate matcher compensates for up to a 100-ppm difference between the source and receiver clocks.

GIGE Mode

In the GIGE mode, the rate matcher adheres to the specifications in clause 36 of the IEEE 802.3 documentation, for idle additions or removals. The rate matcher performs clock compensation only on `/I2/` ordered sets, composing a `/K28.5/+` followed by a `/D16.2/-`. The rate matcher does not perform a clock compensation on any other ordered set combinations. An /I2/ is added or deleted automatically based on the number of words in the FIFO buffer. A `9'h19C` is given at the control and data ports when the FIFO is in an overflow or underflow condition.

XAUI Mode

In XAUI mode, the rate matcher adheres to clause 48 of the IEEE 802.3ae specification for clock rate compensation. The rate matcher performs clock compensation on columns of /R/ (/K28.0/), denoted by //R//. An //R// is added or deleted automatically based on the number of words in the FIFO buffer.

8B/10B Decoder

The 8B/10B decoder converts the 10-bit encoded code group into 8-bit data and 1 control bit. The 8B/10B decoder can be bypassed. The following is a diagram of the conversion from a 10-bit encoded code group into 8-bit data + 1-bit control.

Figure 2–20. 8B/10B Decoder Conversion

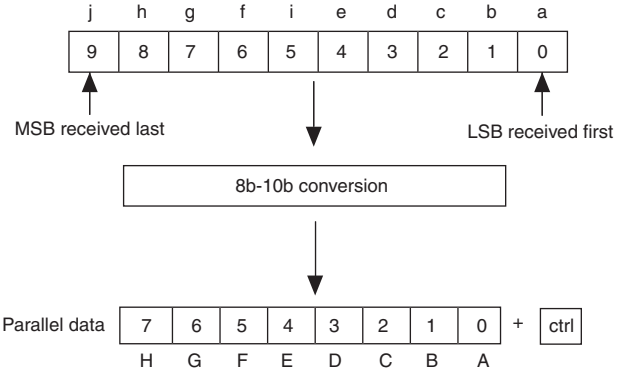

There are two optional error status ports available in the 8B/10B decoder, rx_errdetect and rx_disperr. Table 2–7 shows the values of the ports from a given error. These status signals are aligned with the code group in which the error occurred.

Table 2–7. Error Signal Values

Types of Errors	rx_errdetect	rx_disperr
No errors	1'b0	1'b0
Invalid code groups	1'b1	1'b0
Disparity errors	1'b1	1'b1

EP1SGX25DF1020C7 Intel IC FPGA 607 I/O 1020FBGA

Receiver State Machine

The receiver state machine operates in GIGE and XAUI modes. In GIGE mode, the receiver state machine replaces invalid code groups with `9'h1FE`. In XAUI mode, the receiver state machine translates the XAUI PCS code group to the XAUI XGMII code group. Table 2–8 shows the code conversion. The conversion adheres to the IEEE 802.3ae specification.

Table 2–8. Code Conversion

XGMII RXC	XGMII RXD	PCS code-group	Description
0	00 through FF	Dxx.y	Normal Data
1	07	K28.0 or K28.3 or K28.5	Idle in ||**I**||
1	07	K28.5	Idle in ||**T**||
1	9C	K28.4	Sequence
1	FB	K27.7	Start
1	FD	K29.7	Terminate
1	FE	K30.7	Error
1	FE	Invalid code group	Invalid XGMII character
1	See IEEE 802.3 reserved code groups	See IEEE 802.3 reserved code groups	Reserved code groups

Byte Deserializer

The byte deserializer takes a single width word (8 or 10 bits) from the transceiver logic and converts it into double-width words (16 or 20 bits) to the phase compensation FIFO buffer. The byte deserializer is bypassed when single width mode (8 or 10 bits) is used at the PLD interface.

Phase Compensation FIFO Buffer

The receiver phase compensation FIFO buffer resides in the transceiver block at the programmable logic device (PLD) boundary. This buffer compensates for the phase difference between the recovered clock within the transceiver and the recovered clock after it has transferred to the PLD core. The phase compensation FIFO buffer is four words deep and cannot be bypassed.

Loopback Modes

The Stratix GX transceiver has built-in loopback modes to aid in debug and testing. The loopback modes are set in the Stratix GX MegaWizard Plug-In Manager in the Quartus II software. Only one loopback mode can be set at any single instance of the transceiver block. The loopback mode applies to all used channels in a transceiver block.

The available loopback modes are:

- Serial loopback
- Parallel loopback
- Reverse serial loopback

Serial Loopback

Serial loopback exercises all the transceiver logic except for the output buffer and input buffer. The loopback function is dynamically switchable through the `rx_slpbk` port on a channel by channel basis. The V_{OD} of the output reduced. If you select 400 mV, the output is tri-stated when the serial loopback option is selected. Figure 2–21 shows the data path in serial loopback mode.

Figure 2–21. Data Path in Serial Loopback Mode

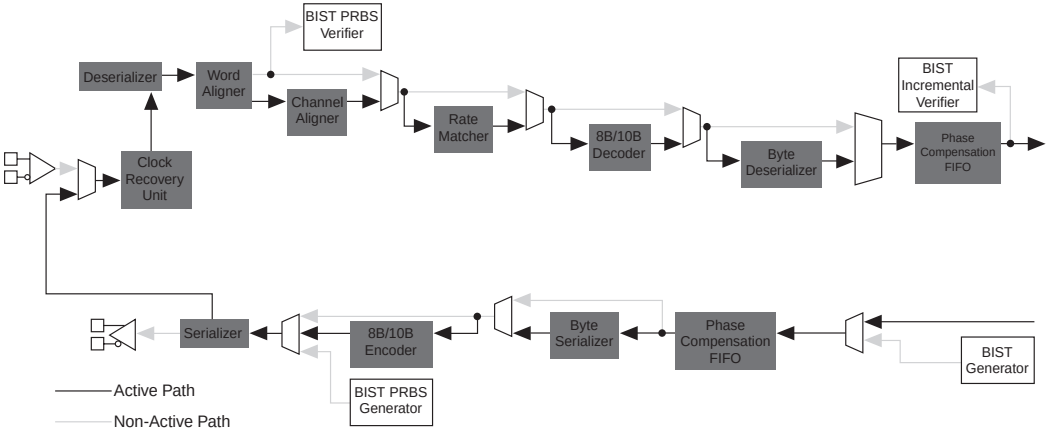

Parallel Loopback

The parallel loopback mode exercises the digital logic portion of the transceiver data path. The analog portions are not use in the loopback path. The received data is not retimed. Figure 2–22 shows the data path in parallel loopback mode. This option is not dynamically switchable. Reception of an external signal is not possible in this mode.

Figure 2–22. Data Path in Parallel Loopback Mode

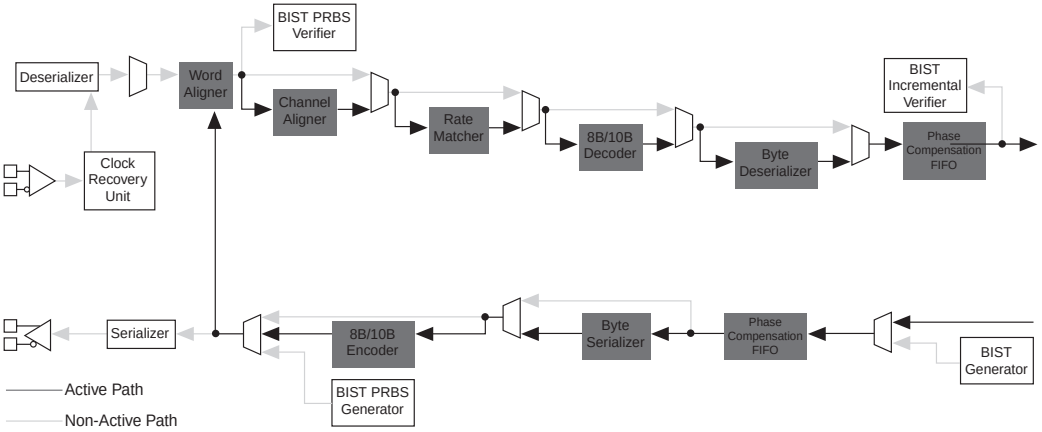

Reverse Serial Loopback

The reverse serial loopback exercises the analog portion of the transceiver. This loopback mode is dynamically switchable through the `tx_srlpbk` port on a channel by channel basis. Asserting `rxanalogreset` in reverse serial loopback mode powers down the receiver buffer and CRU, preventing data loopback. Figure 2–23 shows the data path in reverse serial loopback mode.

Figure 2–23. Data Path in Reverse Serial Loopback Mode

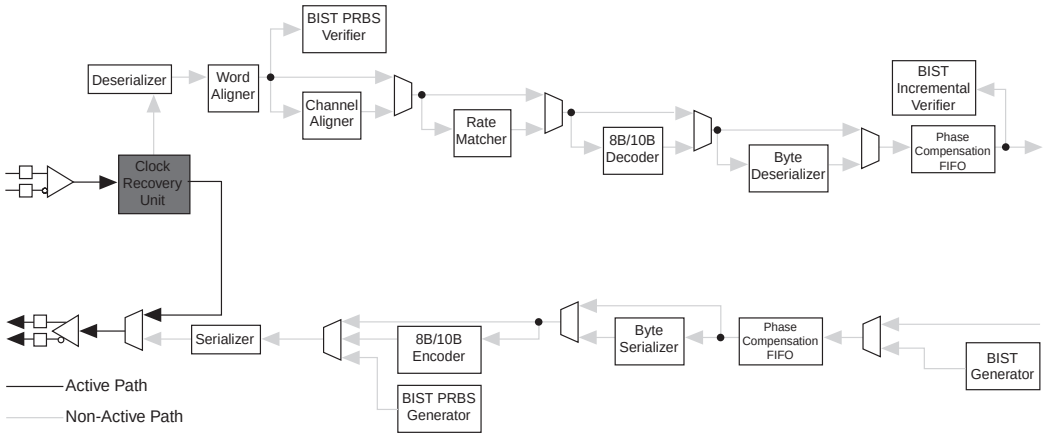

BIST (Built-In Self Test)

The Stratix GX transceiver has built-in self test modes to aid in debug and testing. The BIST modes are set in the Stratix GX MegaWizard Plug-In Manager in the Quartus II software. Only one BIST mode can be set for any single instance of the transceiver block. The BIST mode applies to all channels used in a transceiver.

The following is a list of the available BIST modes:

- PRBS generator and verifier
- Incremental mode generator and verifier
- High-frequency generator
- Low-frequency generator
- Mixed-frequency generator

Figures 2–24 and 2–25 are diagrams of the BIST PRBS data path and the BIST incremental data path, respectively.

Figure 2–24. BIST PRBS Data Path

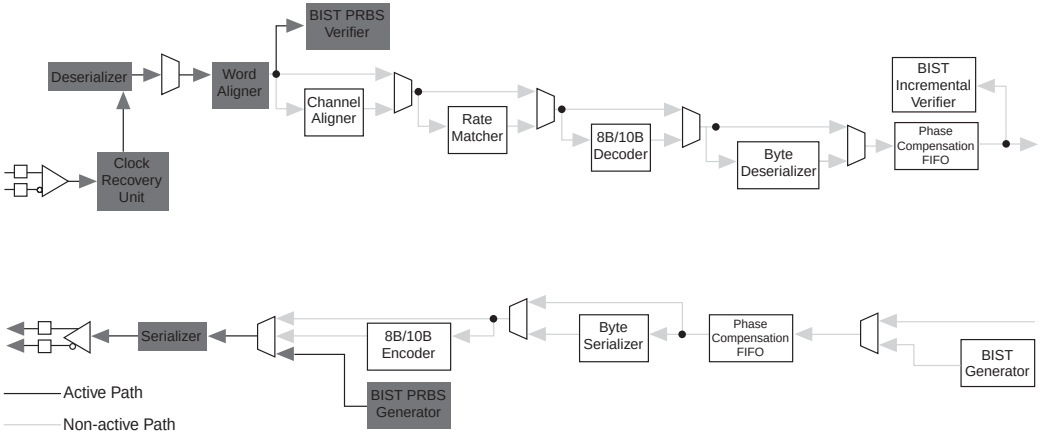

Figure 2–25. BIST Incremental Data Path

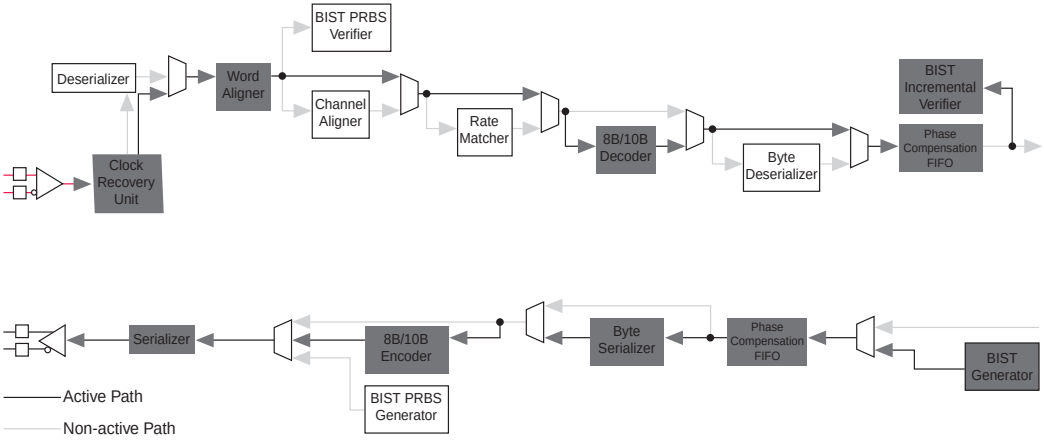

Table 2–9 shows the BIST data output and verifier alignment pattern.

Table 2–9. BIST Data Output & Verifier Alignment Pattern (Part 1 of 2)

BIST Mode	Output	Polynomials	Verifier Word Alignment Pattern
PRBS 8-bit	$2^8 - 1$	$x^8 + x^7 + x^5 + x^3 + 1$	1000000011111111
PRBS 10-bit	$2^{10} - 1$	$x^{10} + x^7 + 1$	1111111111

Table 2–9. BIST Data Output & Verifier Alignment Pattern (Part 2 of 2)

BIST Mode	Output	Polynomials	Verifier Word Alignment Pattern
PRBS 16-bit	$2^8 - 1$	$x^8 + x^7 + x^5 + x^3 + 1$	1000000011111111
PRBS 20-bit	$2^{10} - 1$	$x^{10} + x^7 + 1$	1111111111
Incremental 10-bit	K28.5, K27.7, Data (00-FF incremental), K28.0, K28.1, K28.2, K28.3, K28.4, K28.6, K28.7, K23.7, K30.7, K29.7 *(1)*		0101111100 (K28.5)
Incremental 20-bit	K28.5, K27.7, Data (00-FF incremental), K28.0, K28.1, K28.2, K28.3, K28.4, K28.6, K28.7, K23.7, K30.7, K29.7 *(1)*		0101111100 (K28.5)
High frequency	1010101010		
Low frequency	0011111000		
Mixed frequency	0011111010 or 1100000101		

Note to Table 2–9:
(1) This output repeats.

Stratix GX Clocking

The Stratix GX global clock can be driven by certain REFCLKB pins, all transmitter PLL outputs, and all receiver PLL outputs. The REFCLKB pins (except for transceiver block 0 and transceiver block 4) can drive inter-transceiver and global clock lines as well as feed the transmitter and receiver PLLs. The output of the transmitter PLL can only feed global clock lines and the reference clock port of the receiver PLL.

Figures 2–26 and 2–27 are diagrams of the Inter-Transceiver line connections as well as the global clock connections for the EP1SGX25F and EP1SGX40G devices. For devices with fewer transceivers, ignore the information about the unavailable transceiver blocks.

Figure 2–26. EP1SGX25F Device Inter-Transceiver & Global Clock Connections *Note (1)*

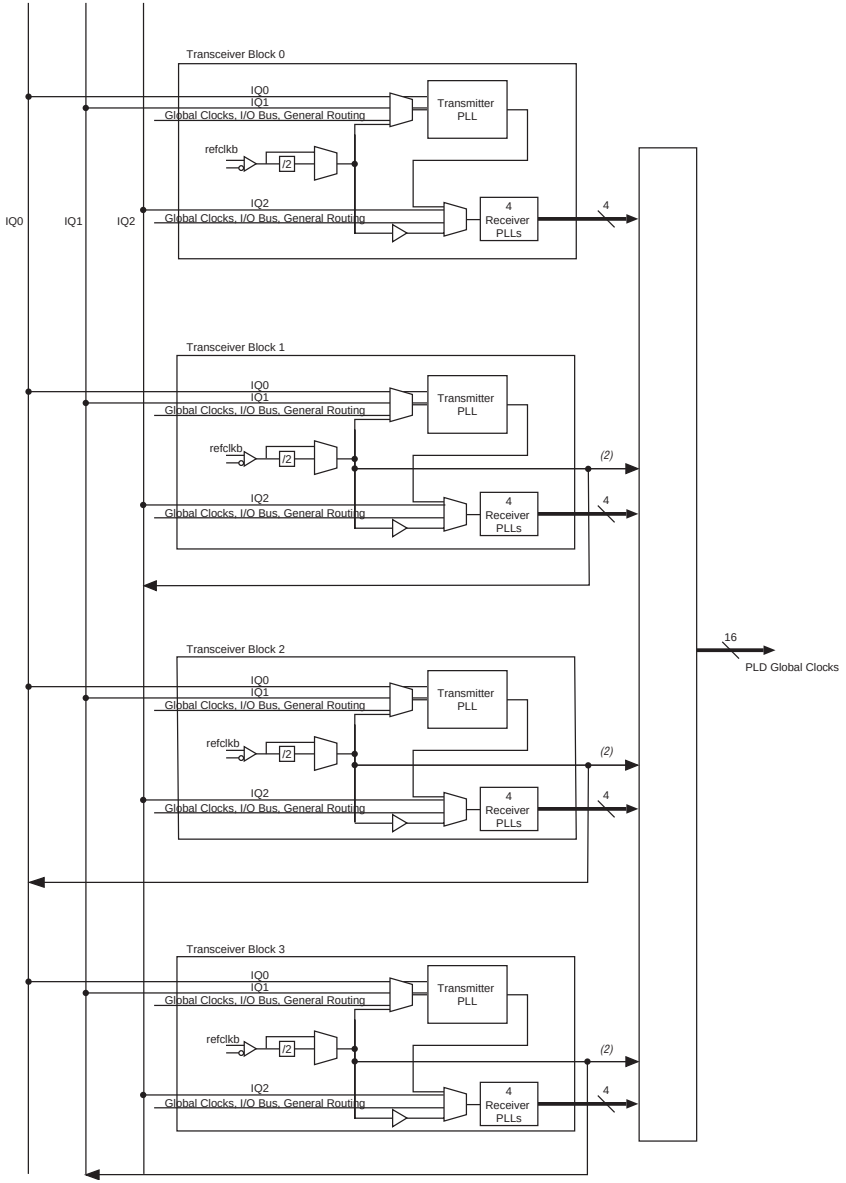

Notes to Figure 2–26:

(1) IQ lines are inter-transceiver block lines.

(2) If the /2 pre-divider is used, the path to drive the PLD logic array, local, or global clocks is not allowed.

(3) There are four receiver PLLs in each transceiver block.

Figure 2–27. EP1SGX40G Device Inter-Transceiver & Global Clock Connections *Note (1)*

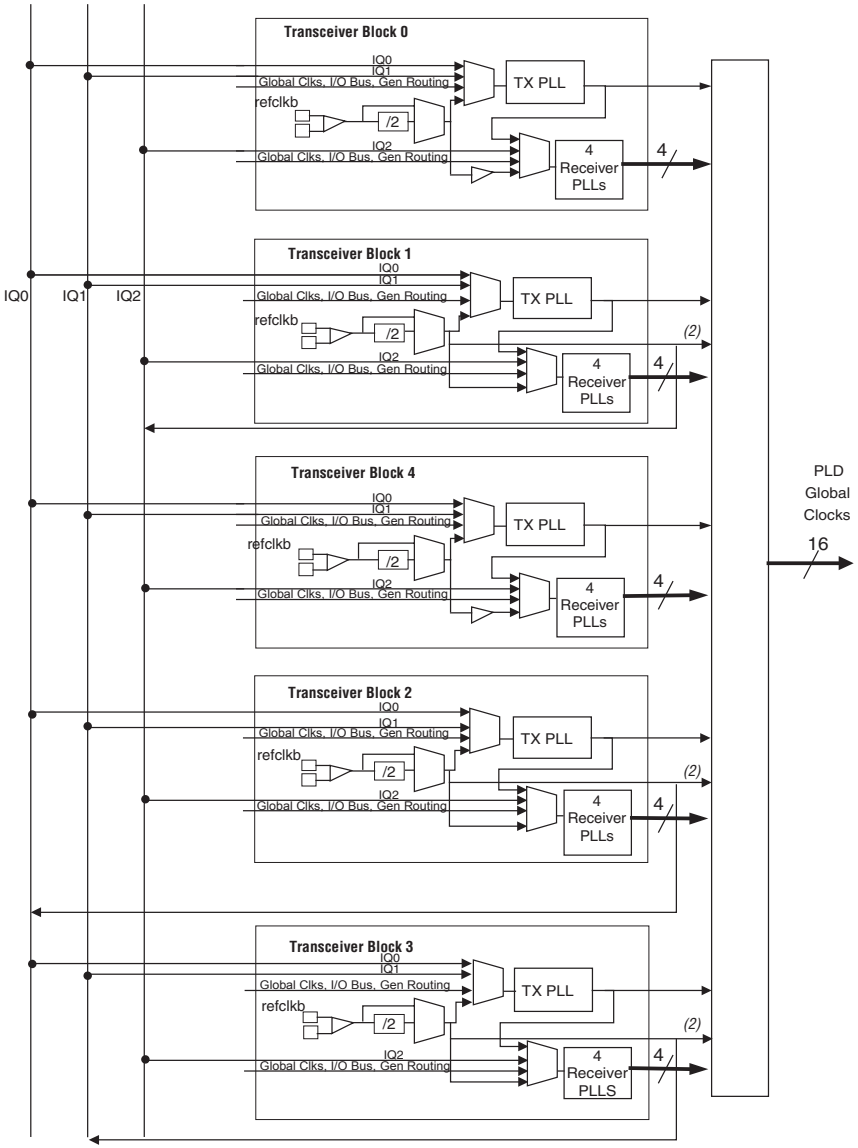

Notes to Figure 2–27:

(1) IQ lines are inter-transceiver block lines.

(2) If the /2 pre-divider is used, the path to drive the PLD logic array, local, or global clocks is not allowed.

(3) There are four receiver PLLs in each transceiver block.

EP1SGX25DF1020C7 Intel IC FPGA 607 I/O 1020FBGA

The receiver PLL can also drive the fast regional, regional clocks, and local routing adjacent to the associated transceiver block. Figures 2–28 through 2–31 show which fast regional and regional clock resource can be used by the recovered clock.

In the EP1SGX25 device, the receiver PLL recovered clocks from transceiver blocks 0 and 1 drive `RCLK[1..0]` while transceiver blocks 2 and 3 drive `RCLK[7..6]`. The regional clocks feed logic in their associated regions.

Figure 2–28. EP1SGX25 Receiver PLL Recovered Clock to Regional Clock Connection

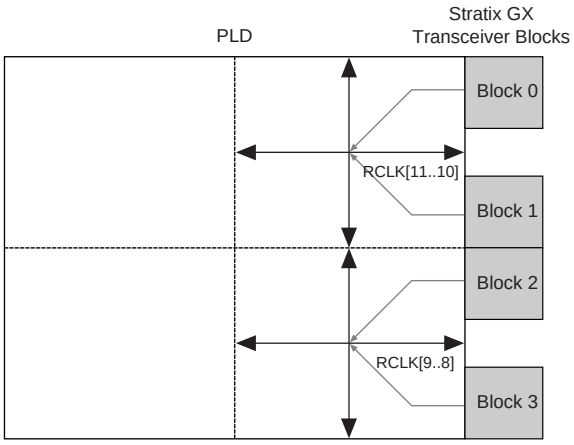

In addition, the receiver PLL's recovered clocks can drive fast regional lines (`FCLK`) as shown Figure 2–29. The fast regional clocks can feed logic in their associated regions.

Figure 2–29. EP1SGX25 Receiver PLL Recovered Clock to Fast Regional Clock Connection

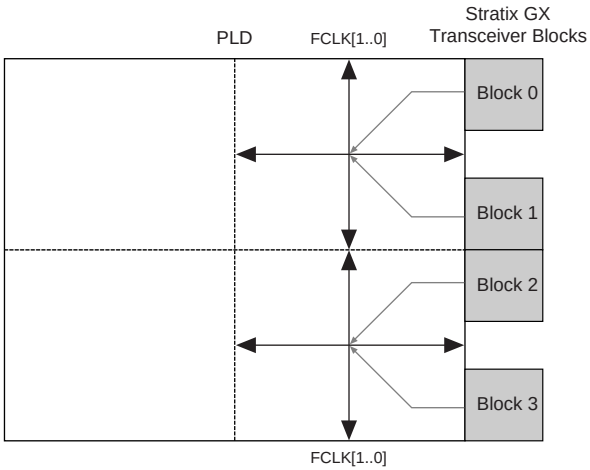

In the EP1SGX40 device, the receiver PLL recovered clocks from transceivers 0 and 1 drive `RCLK[1..0]` while transceivers 2, 3, and 4 drive `RCLK[7..6]`. The regional clocks feed logic in their associated regions.

EP1SGX25DF1020C7 Intel IC FPGA 607 I/O 1020FBGA

Figure 2–30. EP1SGX40 Receiver PLL Recovered Clock to Regional Clock Connection

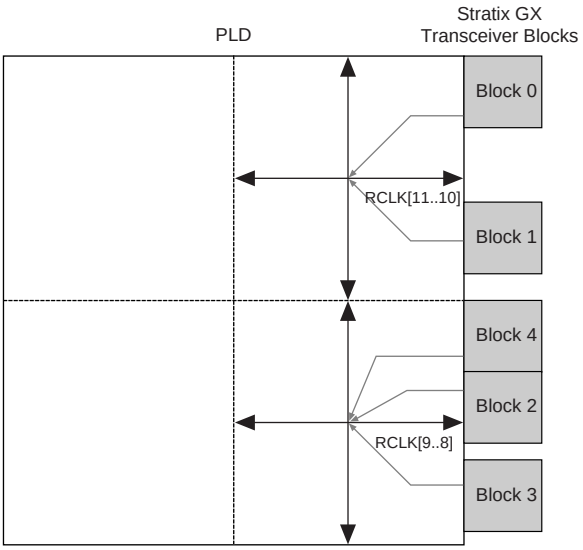

Figure 2–31 shows the possible recovered clock connection to the fast regional clock resource. The fast regional clocks can drive logic in their associated regions.

Figure 2–31. EP1SGX40 Receiver PLL Recovered Clock to Fast Regional Clock Connection

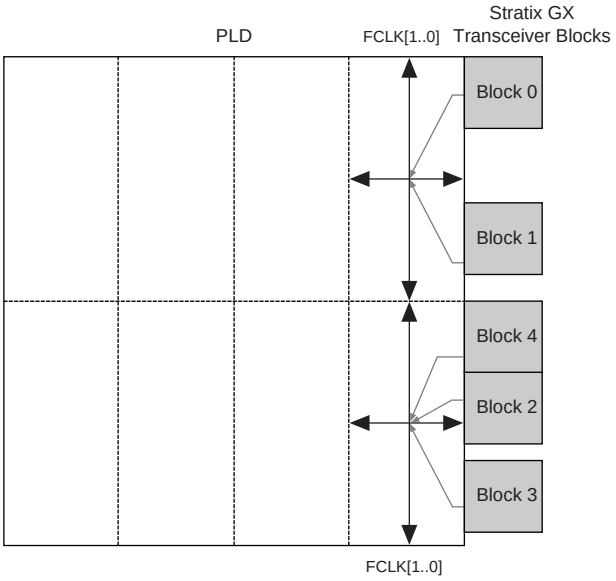

Table 2–10 summarizes the possible clocking connections for the transceivers.

Table 2–10. Possible Clocking Connections for Transceivers (Part 1 of 2)

Source	Destination					
	Transmitter PLL	Receiver PLL	GCLK	RCLK	FCLK	IQ Lines
REFCLKB	✓	✓	✓ *(1)*	✓		✓ *(1)*
Transmitter PLL		✓	✓	✓	✓	
Receiver PLL			✓	✓	✓	
GCLK	✓	✓				
RCLK	✓	✓				
FCLK	✓	✓				

EP1SGX25DF1020C7 Intel IC FPGA 607 I/O 1020FBGA

Table 2–10. Possible Clocking Connections for Transceivers (Part 2 of 2)

Source	Destination					
	Transmitter PLL	Receiver PLL	GCLK	RCLK	FCLK	IQ Lines
IQ lines	✓ (2)	✓ (2)				

Notes to Table 2–10:

(1) REFCLKB from transceiver block 0 and transceiver block 4 does not drive the inter-transceiver lines or the GCLK lines.

(2) Inter-transceiver line 0 and inter-transceiver line 1 drive the transmitter PLL, while inter-transceiver line 2 drives the receiver PLLs.

Other Transceiver Features

Other important features of the Stratix GX transceivers are the power down and reset capabilities, the external voltage reference and bias circuitry, and hot swapping.

Individual Power-Down & Reset for the Transmitter & Receiver

Stratix GX transceivers offer a power saving advantage with their ability to shut off functions that are not needed. The device can individually reset the receiver and transmitter blocks and the PLLs. The Stratix GX device can either globally power down and reset the transmitter and receiver channels or do each channel separately. Table 2–11 shows the connectivity between the reset signals and the Stratix GX logical blocks.

Power-down functions are static, in other words., they are implemented upon device configuration and programmed, through the Quartus II software, to static values. Resets can be static as well as dynamic inputs coming from the logic array or pins.

Table 2–11. Reset Signal Map to Stratix GX Blocks

Reset Signal	Transmitter Phase Compensation FIFO Module/ Byte Serializer	Transmitter 8B/10B Encoder	Transmitter Serializer	Transmitter Analog Circuits	Transmitter PLL	Transmitter XAUI State Machine	Transmitter Analog Circuits	BIST Generators	Receiver Deserializer	Receiver Word Aligner	Receiver Deskew FIFO Module	Receiver Rate Matcher	Receiver 8B/10B Decoder	Receiver Phase Comp FIFO Module/ Byte Deserializer	Receiver PLL / CRU	Receiver XAUI State Machine	BIST Verifiers	Receiver Analog Circuits
rxdigitalreset										✓	✓	✓	✓	✓		✓	✓	
rxanalogreset									✓						✓			✓
txdigitalreset	✓	✓				✓		✓										
pll_areset	✓	✓	✓	✓	✓	✓	✓	✓	✓	✓	✓	✓	✓	✓	✓	✓	✓	✓
pllenable	✓	✓	✓	✓	✓	✓	✓	✓	✓	✓	✓	✓	✓	✓	✓	✓	✓	✓

Voltage Reference Capabilities

Stratix GX transceivers provide voltage reference and bias circuitry. To set-up internal bias for controlling the transmitter output drivers' voltage swing—as well as to provide voltage/current biasing for other analog circuitry—use the internal bandgap voltage reference at 0.7 V. To provide bias for internal pull-up PMOS resistors for I/O termination at the serial interface of receiver and transmitter channels (independent of power supply drift, process changes, or temperature variation) an external resistor, which is connected to the external low voltage power supply, is

EP1SGX25DF1020C7 Intel IC FPGA 607 I/O 1020FBGA

accurately tracked by the internal bias circuit. Moreover, the reference voltage and internal resistor bias current is generated and replicated to the analog circuitry in each channel.

Hot-Socketing Capabilities

Each Stratix GX device is capable of hot-socketing. Because Stratix GX devices can be used in a mixed-voltage environment, they have been designed specifically to tolerate any possible power-up sequence. Signals can be driven into Stratix GX devices before and during power-up without damaging the device. Once operating conditions are reached and the device is configured, Stratix GX devices operate according to your specifications. This feature provides the Stratix GX transceiver line card behavior, so you can insert it into the system without powering the system down, offering more flexibility.

Applications & Protocols Supported with Stratix GX Devices

Each Stratix GX transceiver block is designed to operate at any serial bit rate from 500 Mbps to 3.1875 Gbps per channel. The wide, data rate range allows Stratix GX transceivers to support a wide variety of standard and future protocols such as 10-Gigabit Ethernet XAUI, InfiniBand, Fibre Channel, and Serial RapidIO. Stratix GX devices are ideal for many high-speed communication applications such as high-speed backplanes, chip-to-chip bridges, and high-speed serial communications standards support.

Stratix GX Example Application Support

Stratix GX devices can be used for many applications, including:

- Backplanes for traffic management and quality of service (QOS)
- Switch fabric applications for complete set for backplane and switch fabric transceivers
- Chip-to-chip applications such as: 10 Gigabit Ethernet XAUI to XGMII bridge, 10 Gigabit Ethernet XGMII to POS-PHY4 bridge, POS-PHY4 to NPSI bridge, or NPSI to backplane bridge

EP1SGX25DF1020C7 Intel IC FPGA 607 I/O 1020FBGA

High-Speed Serial Bus Protocols

With wide, serial data rate range, Stratix GX devices can support multiple, high-speed serial bus protocols. Table 2–12 shows some of the protocols that Stratix GX devices can support.

Table 2–12. High-Speed Serial Bus Protocols

Bus Transfer Protocol	Stratix GX (Gbps) (Supports up to 3.1875 Gbps)
SONET backplane	2.488
10 Gigabit Ethernet XAUI	3.125
10 Gigabit fibre channel	3.1875
InfiniBand	2.5
Fibre channel (1G, 2G)	1.0625, 2.125
Serial RapidIO™	1.25, 2.5, 3.125
PCI Express	2.5
SMPTE 292M	1.485

EP1SGX25DF1020C7 Intel IC FPGA 607 I/O 1020FBGA

3. Source-Synchronous Signaling With DPA

SGX51003-1.1

Introduction

Expansion in the telecommunications market and growth in Internet use requires systems to move more data faster than ever. To meet this demand, rely on solutions such as differential signaling and emerging high-speed interface standards including RapidIO, POS-PHY 4, SFI-4, or XSBI.

These new protocols support differential data rates up to 1 Gbps and higher. At these high data rates, it becomes more challenging to manage the skew between the clock and data signals. One solution to this challenge is to use CDR to eliminate skew between data channels and clock signals. Another potential solution, DPA, is beginning to be incorporated into some of these protocols.

The source-synchronous high-speed interface in Stratix GX devices is a dedicated circuit embedded into the PLD allowing for high-speed communications. The *High-Speed Source-Synchronous Differential I/O Interfaces in Stratix GX Devices* chapter of the *Stratix GX Device Handbook, Volume 2* provides information on the high-speed I/O standard features and functions of the Stratix GX device.

Stratix GX I/O Banks

Stratix GX devices contain 17 I/O banks. I/O banks one and two support high-speed LVDS, LVPECL, and 3.3-V PCML inputs and outputs. These two banks also incorporate an embedded dynamic phase aligner within the source-synchronous interface (see Figure 3–8 on page 3–10). The dynamic phase aligner corrects for the phase difference between the clock and data lines caused by skew. The dynamic phase aligner operates automatically and continuously without requiring a fixed training pattern, and allows the source-synchronous circuitry to capture data correctly regardless of the channel-to-clock skew.

Principles of SERDES Operation

Stratix GX devices support source-synchronous differential signaling up to 1 Gbps in DPA mode, and up to 840 Mbps in non-DPA mode. Serial data is transmitted and received along with a low-frequency clock. The PLL can multiply the incoming low-frequency clock by a factor of 1 to 10. The SERDES factor *J* can be 8 or 10 for the DPA mode, or 4, 7, 8, or 10 for all other modes. The SERDES factor does not have to equal the clock

EP1SGX25DF1020C7 Intel IC FPGA 607 I/O 1020FBGA

multiplication value. The ×1 and ×2 operation is also possible by bypassing the SERDES. The SERDES DPA cannot support ×1, ×2, or ×4 natively.

On the receiver side, the high-frequency clock generated by the PLL shifts the serial data through a shift register (also called deserializer). The parallel data is clocked out to the logic array synchronized with the low-frequency clock. On the transmitter side, the parallel data from the logic array is first clocked into a parallel-in, serial-out shift register synchronized with the low-frequency clock and then transmitted out by the output buffers.

There are two dedicated fast PLLs each in EP1SGX10 to EP1SGX25 devices, and four in EP1SGX40 devices. These PLLs are used for the SERDES operations as well as general-purpose use.

Stratix GX Differential I/O Receiver Operation (Non-DPA Mode)

You can configure any of the Stratix GX source synchronous differential input channels as a receiver channel (see Figure 3–1). The differential receiver deserializes the incoming high-speed data. The input shift register continuously clocks the incoming data on the negative transition of the high-frequency clock generated by the PLL clock (×*W*).

The data in the serial shift register is shifted into a parallel register by the `RXLOADEN` signal generated by the fast PLL counter circuitry on the third falling edge of the high-frequency clock. However, you can select which falling edge of the high frequency clock loads the data into the parallel register, using the data-realignment circuit.

In normal mode, the enable signal `RXLOADEN` loads the parallel data into the next parallel register on the second rising edge of the low-frequency clock. You can also load data to the parallel register through the `TXLOADEN` signal when using the data-realignment circuit.

Figure 3–1 shows the block diagram of a single SERDES receiver channel. Figure 3–2 shows the timing relationship between the data and clocks in Stratix GX devices in ×10 mode. *W* is the low-frequency multiplier and *J* is the data parallelization division factor.

EP1SGX25DF1020C7 Intel IC FPGA 607 I/O 1020FBGA

Figure 3–1. Stratix GX High-Speed Interface Deserialized in ×10 Mode

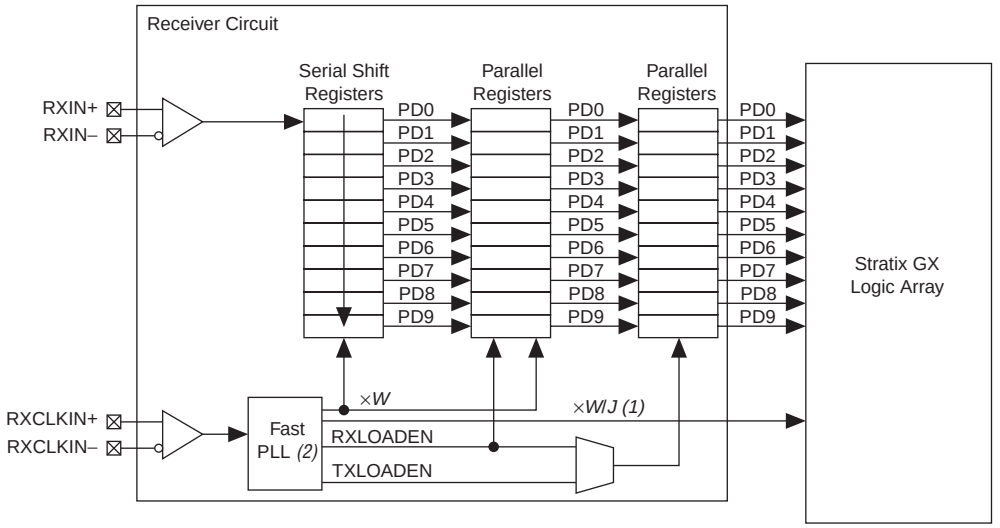

Notes to Figure 3–1:

(1) W = 1, 2, 4, 7, 8, or 10.
J = 4, 7, 8, or 10 for non-DPA (J = 8 or 10 for DPA).
W does not have to equal J. When J = 1 or 2, the deserializer is bypassed. When J = 2, the device uses DDRIO registers.

(2) This figure does not show additional circuitry for clock or data manipulation.

Figure 3–2. Receiver Timing Diagram

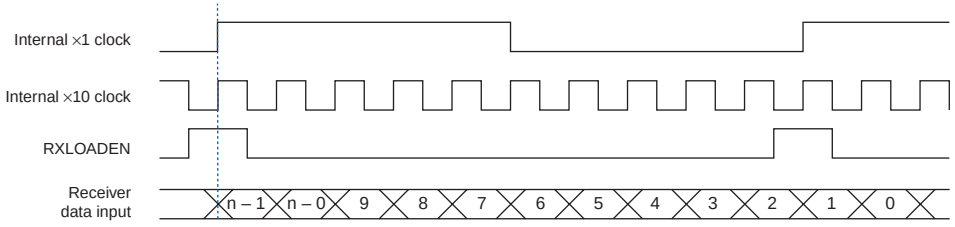

Stratix GX Differential I/O Transmitter Operation

You can configure any of the Stratix GX differential output channels as a transmitter channel. The differential transmitter serializes outbound parallel data.

EP1SGX25DF1020C7 Intel IC FPGA 607 I/O 1020FBGA

The logic array sends parallel data to the SERDES transmitter circuit when the TXLOADEN signal is asserted. This signal is generated by the high-speed counter circuitry of the logic array low-frequency clock's rising edge. The data is then transferred from the parallel register into the serial shift register by the TXLOADEN signal on the third rising edge of the high-frequency clock.

Figure 3–3 shows the block diagram of a single SERDES transmitter channel and Figure 3–4 shows the timing relationship between the data and clocks in Stratix GX devices in ×10 mode. *W* is the low-frequency multiplier and *J* is the data parallelization division factor.

Figure 3–3. Stratix GX High-Speed Interface Serialized in ×10 Mode

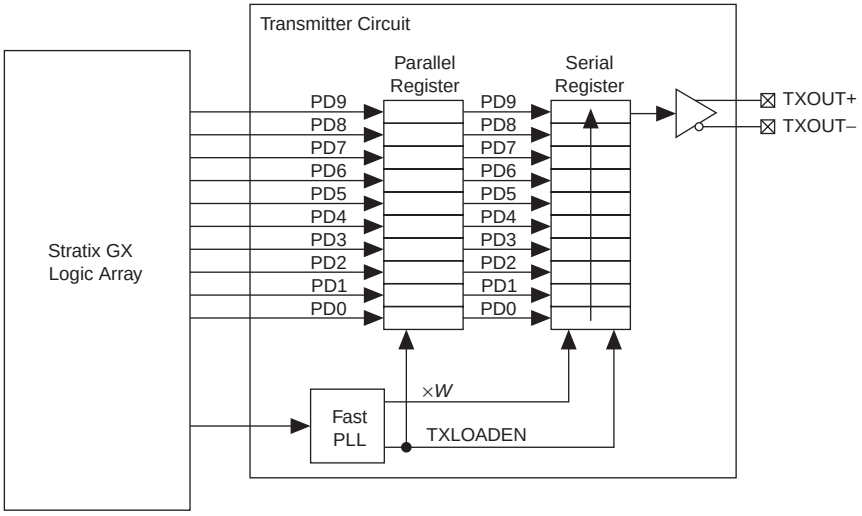

Figure 3–4. Transmitter Timing Diagram

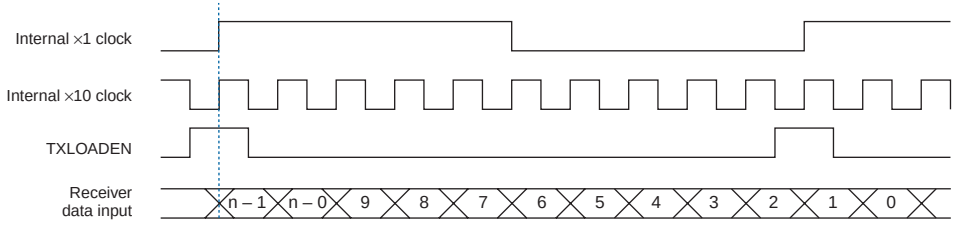

EP1SGX25DF1020C7 Intel IC FPGA 607 I/O 1020FBGA

DPA Block Overview

Each Stratix GX receiver channel features a DPA block. The block contains a dynamic phase selector for phase detection and selection, a SERDES, a synchronizer, and a data realigner circuit. You can bypass the dynamic phase aligner without affecting the basic source-synchronous operation of the channel by using a separate deserializer shown in Figure 3–5.

The dynamic phase aligner uses both the source clock and the serial data. The dynamic phase aligner automatically and continuously tracks fluctuations caused by system variations and self-adjusts to eliminate the phase skew between the multiplied clock and the serial data. Figure 3–5 shows the relationship between Stratix GX source-synchronous circuitry and the Stratix GX source-synchronous circuitry with DPA.

Figure 3–5. Source-Synchronous DPA Circuitry

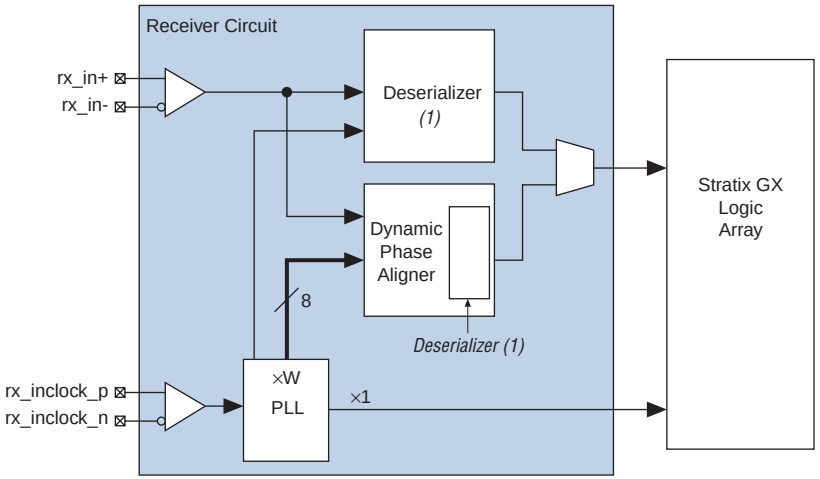

Note to Figure 3–5:

(1) Both deserializers are identical. The deserializer operation is described in the "Principles of SERDES Operation" section.

EP1SGX25DF1020C7 Intel IC FPGA 607 I/O 1020FBGA

Unlike the de-skew function in APEX™ 20KE and APEX 20KC devices, you do not have to use a fixed training pattern with DPA in Stratix GX devices. Table 3–1 shows the differences between source-synchronous circuitry with DPA and source-synchronous circuitry without DPA circuitry in Stratix GX devices.

Table 3–1. Source-Synchronous Circuitry With & Without DPA

Feature	Source-Synchronous Circuitry	
	Without DPA	With DPA
Data rate	300 to 840 Megabits per second (Mbps)	300 Mbps to 1 Gbps
Deserialization factors	1, 2, 4, 8, 10	8, 10
Clock frequency	10 to 717 MHz	74 to 717 MHz
Interface pins	I/O banks 1 and 2	I/O banks 1 and 2
Receiver pins	Dedicated inputs	Dedicated inputs

DPA Input Support

Stratix GX device I/O banks 1 and 2 contain dedicated circuitry to support differential I/O standards at speeds up to 1 Gbps with DPA (or up to 840 Mbps without DPA). Stratix GX device source-synchronous circuitry supports LVDS, LVPECL, and 3.3-V PCML I/O standards, each with a supply voltage of 3.3 V. Refer to the *High-Speed Source-Synchronous Differential I/O Interfaces in Stratix GX Devices* chapter of the *Stratix GX Device Handbook, Volume 2* for more information on these I/O standards. Transmitter pins can be either input or output pins for single-ended I/O standards. Refer to Table 3–2.

Table 3–2. Bank 1 & 2 Input Pins

Input Pin Type	I/O Standard	Receiver Pin	Transmitter Pin
Differential	Differential	Input only	Output only
Single ended	Single ended	Input only	Input or output

Interface & Fast PLL

This section describes the number of channels that support DPA and their relationship with the PLL in Stratix GX devices. EP1SGX10 and EP1SGX25 devices have two dedicated fast PLLs and EP1SGX40 devices

EP1SGX25DF1020C7 Intel IC FPGA 607 I/O 1020FBGA

have four dedicated fast PLLs for clock multiplication. Table 3–3 shows the maximum number of channels in each Stratix GX device that support DPA.

Table 3–3. Stratix GX Source-Synchronous Differential I/O Resources

Device	Fast PLLs	Pin Count	Receiver Channels *(1)*	Transmitter Channels *(1)*	Receiver & Transmitter Channel Speed (Gbps) *(2)*	LEs
EP1SGX10C	2 *(3)*	672	22	22	1	10,570
EP1SGX10D	2 *(3)*	672	22	22	1	10,570
EP1SGX25C	2	672	39	39	1	25,660
EP1SGX25D	2	672	39	39	1	25,660
		1,020	39	39	1	25,660
EP1SGX25F	2	1,020	39	39	1	25,660
EP1SGX40D	4 *(4)*	1,020	45	45	1	41,250
EP1SGX40G	4 *(4)*	1,020	45	45	1	41,250

Notes to Table 3–3:

(1) This is the number of receiver or transmitter channels in the source-synchronous (I/O bank 1 and 2) interface of the device.

(2) Receiver channels operate at 1,000 Mbps with DPA. Without DPA, the receiver channels operate at 840 Mbps.

(3) One of the two fast PLLs in EP1SGX10C and EP1SGX10D devices supports DPA.

(4) Two of the four fast PLLs in EP1SGX40D and EP1SGX40G devices support DPA

The receiver and transmitter channels are interleaved so that each I/O row in I/O banks 1 and 2 of the device has one receiver channel and one transmitter channel per row. Figures 3–6 and 3–7 show the fast PLL and channels with DPA layout in EP1SGX10, EP1SGX25, and EP1SGX40 devices. In EP1SGX10 devices, only fast PLL 2 supports DPA operations.

EP1SGX25DF1020C7 Intel IC FPGA 607 I/O 1020FBGA

Figure 3–6. PLL & Channel Layout in EP1SGX10 & EP1SGX25 Devices *Notes (1), (2)*

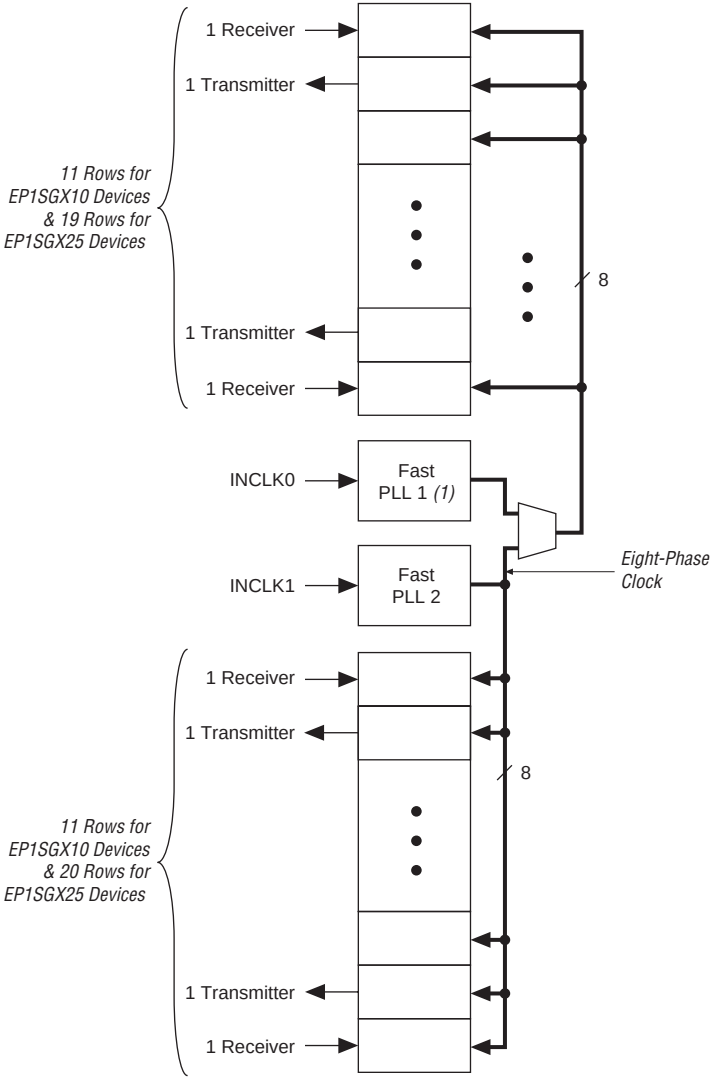

Notes to Figure 3–6:

(1) Fast PLL 1 in EP1SGX10 devices does not support DPA.

(2) Not all eight phases are used by the receiver channel or transmitter channel in non-DPA mode.

Figure 3–7. PLL & Channel Layout in EP1SGX40 Devices *Notes (1), (2), (3)*

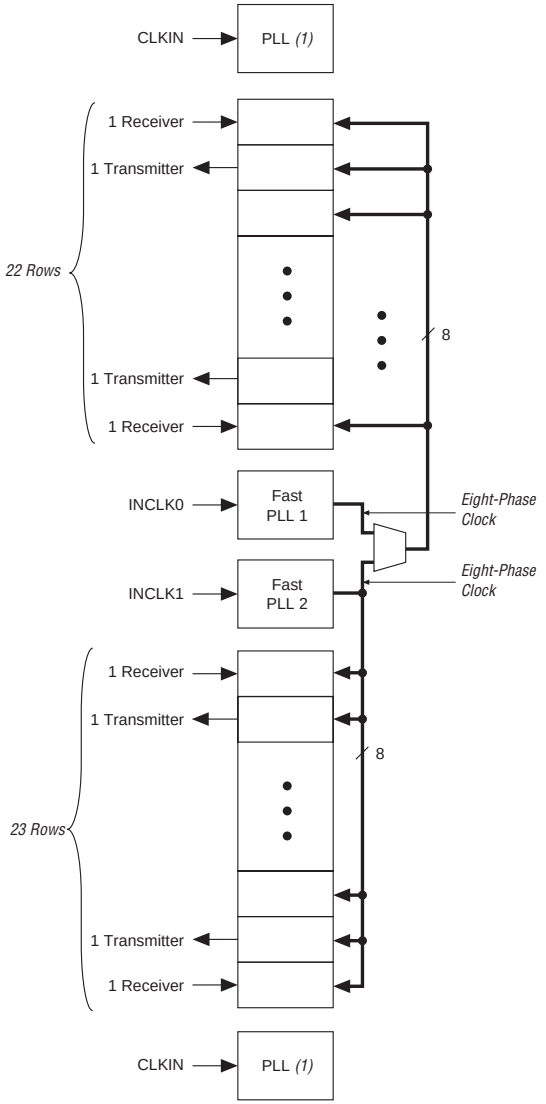

Notes to Figure 3–7:

(1) Corner PLLs do not support DPA.

(2) Not all eight phases are used by the receiver channel or transmitter channel in non-DPA mode.

(3) The center PLLs can only clock 20 transceivers in either direction. Using Fast PLL2, you can clock a total of 40 transceivers, 20 in each direction.

EP1SGX25DF1020C7 Intel IC FPGA 607 I/O 1020FBGA

DPA Operation

The DPA receiver circuitry contains the dynamic phase selector, the deserializer, the synchronizer, and the data realigner (see Figure 3–8). This section describes the DPA operation, synchronization and data realignment. In the SERDES with DPA mode, the source clock is fed to the fast PLL through the dedicated clock input pins. This clock is multiplied by the multiplication value *W* to match the serial data rate.

For information on the deserializer, see "Principles of SERDES Operation" on page 3–1.

Figure 3–8. DPA Receiver Circuit

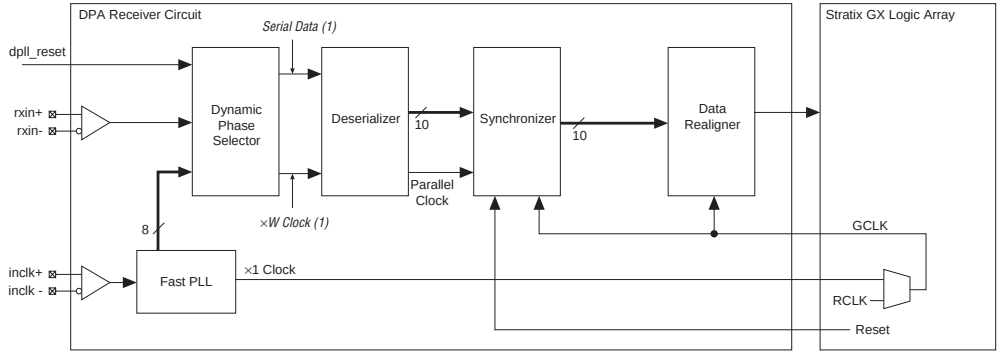

Note to Figure 3–8:
(1) These are phase-matched and retimed high-speed clocks and data.

The dynamic phase selector matches the phase of the high-speed clock and data before sending them to the deserializer.

The fast PLL supplies eight phases of the same clock (each a separate tap from a four-stage differential VCO) to all the differential channels associated with the selected fast PLL. The DPA circuitry inside each channel locks to a phase closest to the serial data's phase and sends the retimed data and the selected clock to the deserializer. The DPA circuitry automatically performs this operation and is not something you select. Each channel's DPA circuit can independently choose a different clock phase. The data phase detection and the clock phase selection process is automatic and continuous. The eight phases of the clock give the DPA circuit a granularity of one eighth of the unit interval (UI) or 125 ps at 1 Gbps. Figure 3–9 illustrates the clocks generated by the fast PLL circuitry and their relationship to a data stream.

EP1SGX25DF1020C7 Intel IC FPGA 607 I/O 1020FBGA

Figure 3–9. Fast PLL Clocks & Data Input

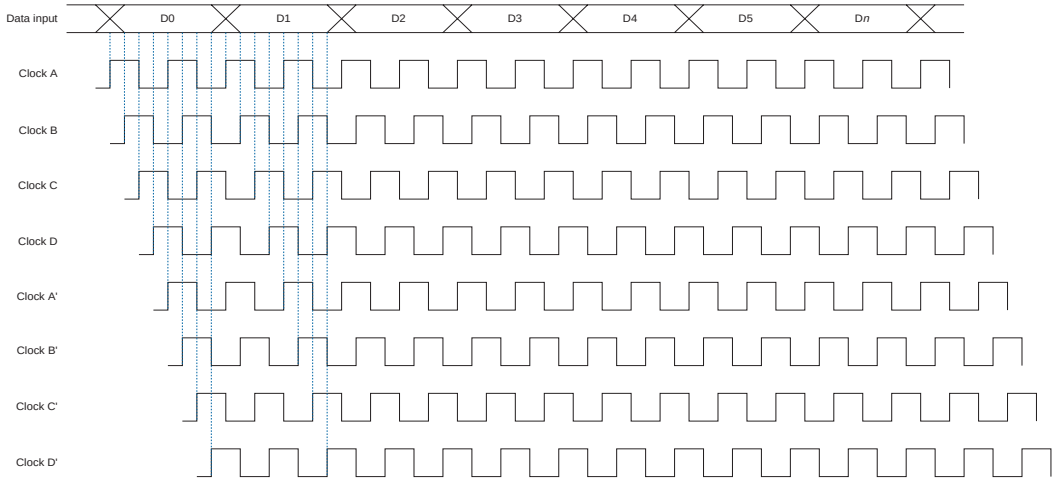

Protocols, Training Pattern & DPA Lock Time

The dynamic phase aligner uses a fast PLL for clock multiplication, and the dynamic phase selector for the phase detection and alignment. The dynamic phase aligner uses the high-speed clock out of the dynamic phase selector to deserialize high-speed data and the receiver's source synchronous operations.

At each rising edge of the clock, the dynamic phase selector determines the phase difference between the clock and the data and automatically compensates for the phase difference between the data and clock.

EP1SGX25DF1020C7 Intel IC FPGA 607 I/O 1020FBGA

The actual lock time for different data patterns varies depending on the data's transition density (how often the data switches between 1 and 0) and jitter characteristic. The DPA circuitry is designed to lock onto any data pattern with sufficient transition density, so the circuitry works with current and future protocols. Experiments and simulations show that the DPA circuitry locks when the data patterns listed in Table 3–4 are repeated for the specified number of times. There are other suitable patterns not shown in Table 3–4 and/or pattern lengths, but the lock time may vary. The circuit can adjust for any phase variation that may occur during operation.

Table 3–4. Training Patterns for Different Protocols

Protocols	Training Pattern	Number of Repetitions
SPI-4, NPSI	Ten 0's, ten 1's (00000000001111111111)	256
RapidIO	Four 0's, four 1's (00001111) or one 1, two 0's, one 1, four 0's (10010000)	
Other designs	Eight alternating 1's and 0's (10101010 or 01010101)	
SFI-4, XSBI	Not specified	

Phase Synchronizer

Each receiver has its own phase synchronizer. The receiver phase synchronizer aligns the phase of the parallel data from all the receivers to one global clock. The synchronizers in each channel consist of a 4-bit deep and *J*-bit wide FIFO buffer. The parallel clock writes to the FIFO buffer and the global clock (GCLK) reads from the FIFO buffer. The global and parallel clock inputs into the synchronizers must have identical frequencies and differ only in phase. The FIFO buffer never becomes full or empty (because the source and receive signals are frequency locked) when operating within the DPA specifications, and the operation does not require an empty/full flag or read/write enable signals.

Receiver Data Realignment In DPA Mode

While DPA operation aligns the incoming clock phase to the incoming data phase, it does not guarantee the parallelization boundary or byte boundary. When the dynamic phase aligner realigns the data bits, the bits may be shifted out of byte alignment, as shown in Figure 3–10.

EP1SGX25DF1020C7 Intel IC FPGA 607 I/O 1020FBGA

Figure 3–10. Misaligned Captured Bits

The dynamic phase selector and synchronizer align the clock and data based on the power-up of both communicating devices, and the channel to channel skew. However, the dynamic phase selector and synchronizer cannot determine the byte boundary, and the data may need to be byte-aligned. The dynamic phase aligner's data realignment circuitry shifts data bits to correct bit misalignments.

The Stratix GX circuitry contains a data-realignment feature controlled by the logic array. Stratix GX devices perform data realignment on the parallel data after the deserialization block. The data realignment can be performed per channel for more flexibility. The data alignment operation requires a state machine to recognize a specific pattern. The procedure requires the bits to be slipped on the data stream to correctly align the incoming data to the start of the byte boundary.

The DPA uses its realignment circuitry and the global clock for data realignment. Either a device pin or the logic array asserts the internal `rx_channel_data_align` node to activate the DPA data-realignment circuitry. Switching this node from low to high activates the realignment circuitry and the data being transferred to the logic array is shifted by one bit. The data realignment block cannot be bypassed. However, if the `rx_channel_data_align` is not turned on (through the `altvlds` MegaWizard Plug-In Manager), or when it is not toggled, it only acts as a register latency.

A state machine and additional logic can monitor the incoming parallel data and compare it against a known pattern. If the incoming data pattern does not match the known pattern, you can activate the `rx_channel_data_align` node again. Repeat this process until the realigner detects the desired match between the known data pattern and incoming parallel data pattern.

EP1SGX25DF1020C7 Intel IC FPGA 607 I/O 1020FBGA

The DPA data-realignment circuitry allows further realignment beyond what the *J* multiplication factor allows. You can set the *J* multiplication factor to be 8 or 10. However, because data must be continuously clocked in on each low-speed clock cycle, the upcoming bit to be realigned and previous *n* –1 bits of data are selected each time the data realignment logic's counter passes *n* –1. At this point the data is selected entirely from bit-slip register 3 (see Figure 3–11) as the counter is reset to 0. The logic array receives a new valid byte of data on the next divided low speed clock cycle. Figure 3–11 shows the data realignment logic output selection from data in the data realignment register 2 and data realignment register 3 based on its current counter value upon continuous request of data slipping from the logic array.

Figure 3–11. DPA Data Realigner

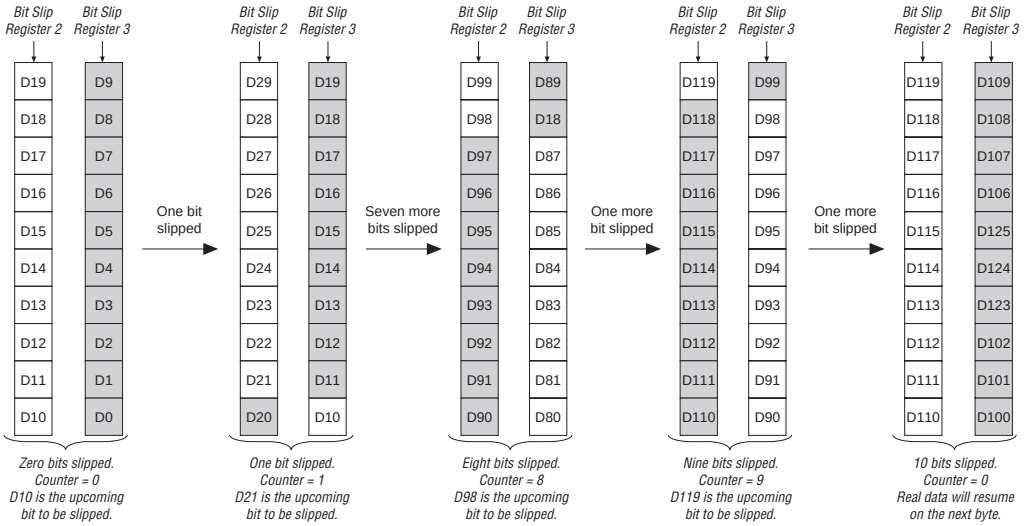

Use the `rx_channel_data_align` signal within the device to activate the data realigner. You can use internal logic or an external pin to control the `rx_channel_data_align` signal. To ensure the rising edge of the `rx_channel_data_align` signal is latched into the control logic, the `rx_channel_data_align` signal should stay high for at least two low-frequency clock cycles.

EP1SGX25DF1020C7 Intel IC FPGA 607 I/O 1020FBGA

To manage the alignment procedure, a state machine should be built in the FPGA logic array to generate the realignment signal. The following guidelines outline the requirements for this state machine.

- The design must include an input synchronizing register to ensure that data is synchronized to the ×*W*/*J* clock.
- After the state machine, use another synchronizing register to capture the generated `rx_channel_data_align` signal and synchronize it to the ×*W*/*J* clock.
- Because the skew in the path from the output of this synchronizing register to the PLL is undefined, the state machine must generate a pulse that is high for two *W*/*J* clock periods.
- To guarantee the state machine does not incorrectly generate multiple `rx_channel_data_align` pulses to shift a single bit, the state machine must hold the `rx_channel_data_align` signal low for at least three ×1 clock periods between pulses.

EP1SGX25DF1020C7 Intel IC FPGA 607 I/O 1020FBGA

4. Stratix GX Architecture

SGX51004-1.0

Logic Array Blocks

Each LAB consists of 10 LEs, LE carry chains, LAB control signals, local interconnect, LUT chain, and register chain connection lines. The local interconnect transfers signals between LEs in the same LAB. LUT chain connections transfer the output of one LE's LUT to the adjacent LE for fast sequential LUT connections within the same LAB. Register chain connections transfer the output of one LE's register to the adjacent LE's register within an LAB. The Quartus® II Compiler places associated logic within an LAB or adjacent LABs, allowing the use of local, LUT chain, and register chain connections for performance and area efficiency. Figure 4–1 shows the Stratix® GX LAB.

Figure 4–1. Stratix GX LAB Structure

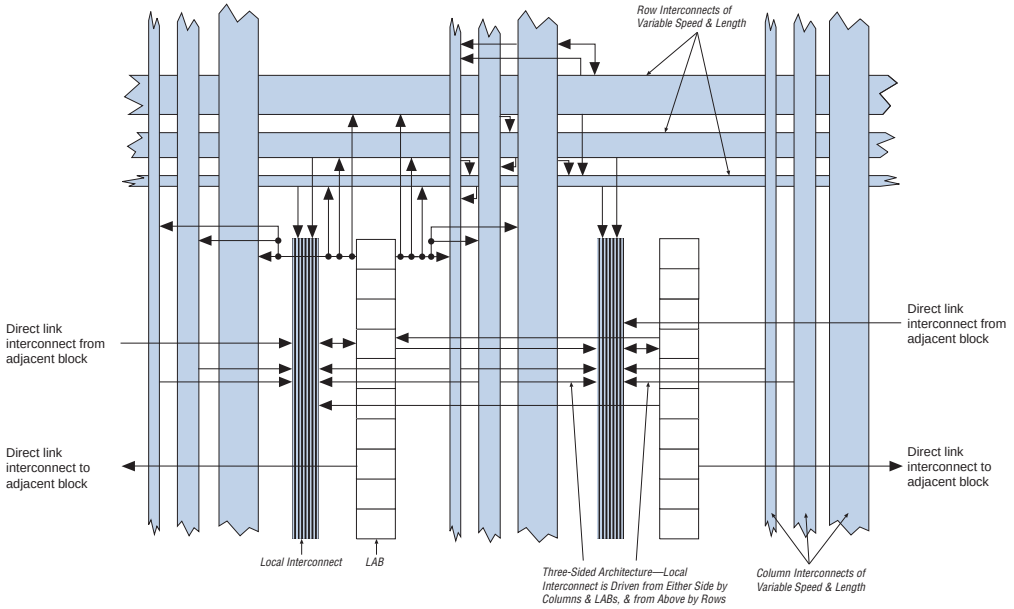

LAB Interconnects

The LAB local interconnect can drive LEs within the same LAB. The LAB local interconnect is driven by column and row interconnects and LE outputs within the same LAB. Neighboring LABs, M512 RAM blocks,

EP1SGX25DF1020C7 Intel IC FPGA 607 I/O 1020FBGA

M4K RAM blocks, or DSP blocks from the left and right can also drive an LAB's local interconnect through the direct link connection. The direct link connection feature minimizes the use of row and column interconnects, providing higher performance and flexibility. Each LE can drive 30 other LEs through fast local and direct link interconnects. Figure 4–2 shows the direct link connection.

Figure 4–2. Direct Link Connection

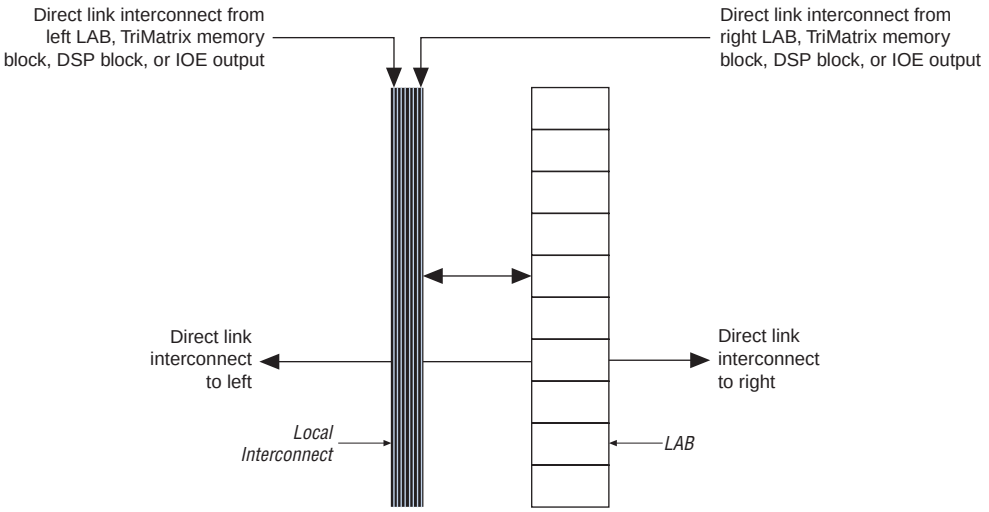

LAB Control Signals

Each LAB contains dedicated logic for driving control signals to its LEs. The control signals include two clocks, two clock enables, two asynchronous clears, synchronous clear, asynchronous preset/load, synchronous load, and add/subtract control signals. This gives a maximum of 10 control signals at a time. Although synchronous load and clear signals are generally used when implementing counters, they can also be used with other functions.

Each LAB can use two clocks and two clock enable signals. Each LAB's clock and clock enable signals are linked. For example, any LE in a particular LAB using the `labclk1` signal also uses `labclkena1`. If the LAB uses both the rising and falling edges of a clock, it also uses both LAB-wide clock signals. De-asserting the clock enable signal turns off the LAB-wide clock.

EP1SGX25DF1020C7 Intel IC FPGA 607 I/O 1020FBGA

Each LAB can use two asynchronous clear signals and an asynchronous load/preset signal. The asynchronous load acts as a preset when the asynchronous load data input is tied high.

With the LAB-wide `addnsub` control signal, a single LE can implement a one-bit adder and subtractor. This saves LE resources and improves performance for logic functions such as DSP correlators and signed multipliers that alternate between addition and subtraction depending on data.

The LAB row clocks [7..0] and LAB local interconnect generate the LAB-wide control signals. The MultiTrack™ interconnect's inherent low skew allows clock and control signal distribution in addition to data. Figure 4–3 shows the LAB control signal generation circuit.

Figure 4–3. LAB-Wide Control Signals

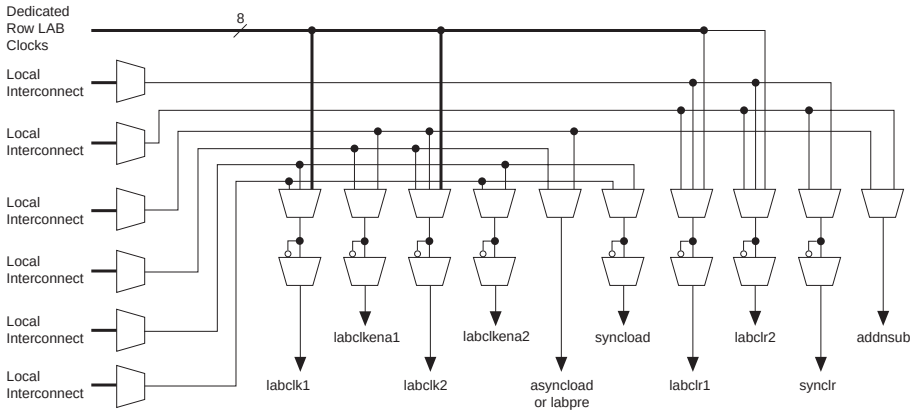

Logic Elements

The smallest unit of logic in the Stratix GX architecture, the LE, is compact and provides advanced features with efficient logic utilization. Each LE contains a four-input LUT, which is a function generator that can implement any function of four variables. In addition, each LE contains a programmable register and carry chain with carry select capability. A single LE also supports dynamic single bit addition or subtraction mode selectable by an LAB-wide control signal. Each LE drives all types of interconnects: local, row, column, LUT chain, register chain, and direct link interconnects. See Figure 4–4.

Figure 4–4. Stratix GX LE

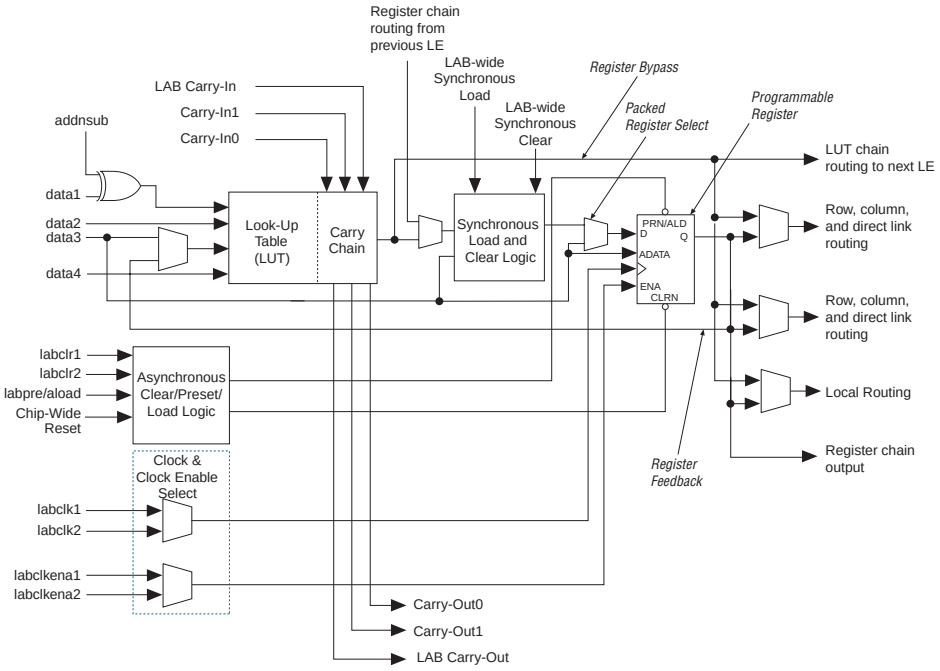

Each LE's programmable register can be configured for D, T, JK, or SR operation. Each register has data, true asynchronous load data, clock, clock enable, clear, and asynchronous load/preset inputs. Global signals, general-purpose I/O pins, or any internal logic can drive the register's clock and clear control signals. Either general-purpose I/O pins or internal logic can drive the clock enable, preset, asynchronous load, and asynchronous data. The asynchronous load data input comes from the `data3` input of the LE. For combinatorial functions, the register is bypassed and the output of the LUT drives directly to the outputs of the LE.

Each LE has three outputs that drive the local, row, and column routing resources. The LUT or register output can drive these three outputs independently. Two LE outputs drive column or row and direct link routing connections and one drives local interconnect resources. This allows the LUT to drive one output while the register drives another output. This feature, called register packing, improves device utilization because the device can use the register and the LUT for unrelated functions. Another special packing mode allows the register output to feed back into the LUT of the same LE so that the register is packed with

EP1SGX25DF1020C7 Intel IC FPGA 607 I/O 1020FBGA

its own fan-out LUT. This provides another mechanism for improved fitting. The LE can also drive out registered and unregistered versions of the LUT output.

LUT Chain & Register Chain

In addition to the three general routing outputs, the LEs within an LAB have LUT chain and register chain outputs. LUT chain connections allow LUTs within the same LAB to cascade together for wide input functions. Register chain outputs allow registers within the same LAB to cascade together. The register chain output allows an LAB to use LUTs for a single combinatorial function and the registers to be used for an unrelated shift register implementation. These resources speed up connections between LABs while saving local interconnect resources. See "MultiTrack Interconnect" on page 4–11 for more information on LUT chain and register chain connections.

addnsub Signal

The LE's dynamic adder/subtractor feature saves logic resources by using one set of LEs to implement both an adder and a subtractor. This feature is controlled by the LAB-wide control signal `addnsub`. The `addnsub` signal sets the LAB to perform either A + B or A – B. The LUT computes addition, and subtraction is computed by adding the two's complement of the intended subtractor. The LAB-wide signal converts to two's complement by inverting the B bits within the LAB and setting carry-in = 1 to add one to the least significant bit (LSB). The LSB of an adder/subtractor must be placed in the first LE of the LAB, where the LAB-wide `addnsub` signal automatically sets the carry-in to 1. The Quartus II Compiler automatically places and uses the adder/subtractor feature when using adder/subtractor parameterized functions.

LE Operating Modes

The Stratix GX LE can operate in one of the following modes:

- Normal mode
- Dynamic arithmetic mode

Each mode uses LE resources differently. In each mode, eight available inputs to the LE—the four data inputs from the LAB local interconnect; `carry-in0` and `carry-in1` from the previous LE; the LAB carry-in from the previous carry-chain LAB; and the register chain connection—are directed to different destinations to implement the desired logic function. LAB-wide signals provide clock, asynchronous clear, asynchronous preset load, synchronous clear, synchronous load, and

clock enable control for the register. These LAB-wide signals are available in all LE modes. The addnsub control signal is allowed in arithmetic mode.

The Quartus II software, in conjunction with parameterized functions such as library of parameterized modules (LPM) functions, automatically chooses the appropriate mode for common functions such as counters, adders, subtractors, and arithmetic functions. If required, you can also create special-purpose functions that specify which LE operating mode to use for optimal performance.

Normal Mode

The normal mode is suitable for general logic applications and combinatorial functions. In normal mode, four data inputs from the LAB local interconnect are inputs to a four-input LUT (see Figure 4–5). The Quartus II Compiler automatically selects the carry-in or the data3 signal as one of the inputs to the LUT. Each LE can use LUT chain connections to drive its combinatorial output directly to the next LE in the LAB. Asynchronous load data for the register comes from the data3 input of the LE. LEs in normal mode support packed registers.

Figure 4–5. LE in Normal Mode

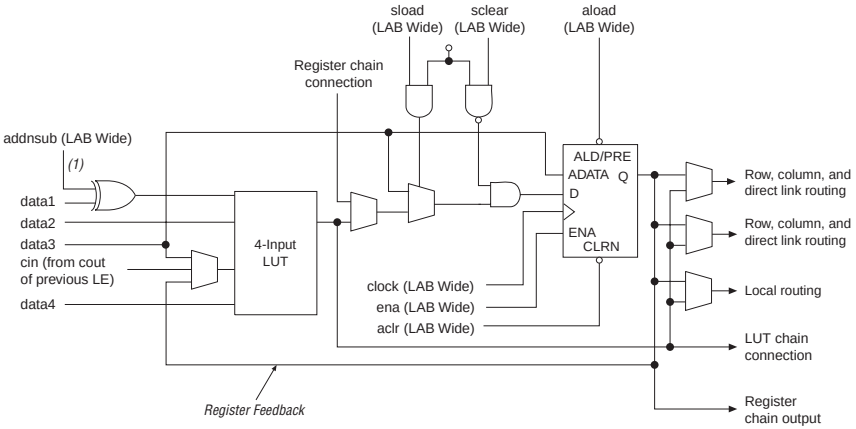

Note to Figure 4–5:
(1) This signal is only allowed in normal mode if the LE is at the end of an adder/subtractor chain.

EP1SGX25DF1020C7 Intel IC FPGA 607 I/O 1020FBGA

Dynamic Arithmetic Mode

The dynamic arithmetic mode is ideal for implementing adders, counters, accumulators, wide parity functions, and comparators. An LE in dynamic arithmetic mode uses four 2-input LUTs configurable as a dynamic adder/subtractor. The first two 2-input LUTs compute two summations based on a possible carry-in of 1 or 0; the other two LUTs generate carry outputs for the two chains of the carry select circuitry. As shown in Figure 4–6, the LAB carry-in signal selects either the `carry-in0` or `carry-in1` chain. The selected chain's logic level in turn determines which parallel sum is generated as a combinatorial or registered output. For example, when implementing an adder, the sum output is the selection of two possible calculated sums: `data1` + `data2` + `carry-in0` or `data1` + `data2` + `carry-in1`. The other two LUTs use the `data1` and `data2` signals to generate two possible carry-out signals—one for a carry of 1 and the other for a carry of 0. The `carry-in0` signal acts as the carry select for the `carry-out0` output and `carry-in1` acts as the carry select for the `carry-out1` output. LEs in arithmetic mode can drive out registered and unregistered versions of the LUT output.

The dynamic arithmetic mode also offers clock enable, counter enable, synchronous up/down control, synchronous clear, synchronous load, and dynamic adder/subtractor options. The LAB local interconnect data inputs generate the counter enable and synchronous up/down control signals. The synchronous clear and synchronous load options are LAB-wide signals that affect all registers in the LAB. The Quartus II software automatically places any registers that are not used by the counter into other LABs. The `addnsub` LAB-wide signal controls whether the LE acts as an adder or subtractor.

Figure 4–6. LE in Dynamic Arithmetic Mode

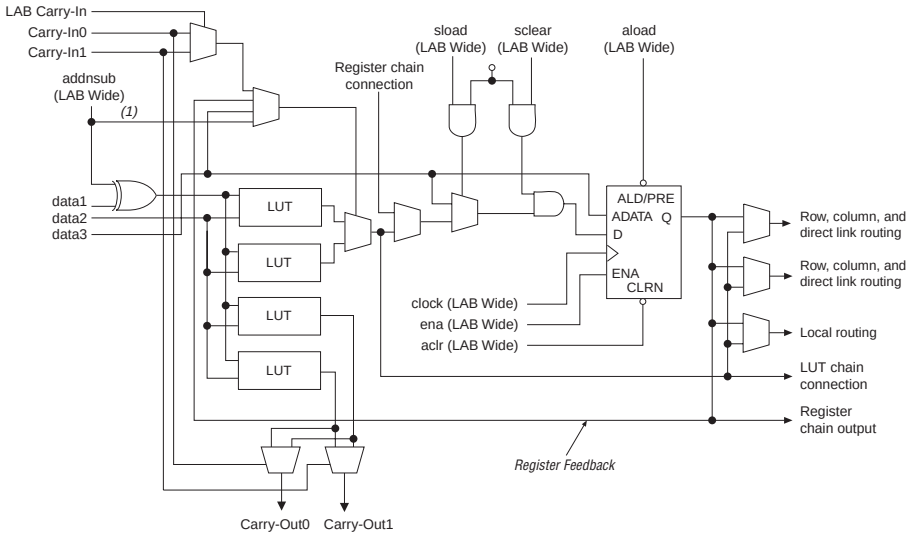

Note to Figure 4–6:
(1) The `addnsub` signal is tied to the carry input for the first LE of a carry chain only.

Carry-Select Chain

The carry-select chain provides a very fast carry-select function between LEs in arithmetic mode. The carry-select chain uses the redundant carry calculation to increase the speed of carry functions. The LE is configured to calculate outputs for a possible carry-in of 1 and carry-in of 0 in parallel. The `carry-in0` and `carry-in1` signals from a lower-order bit feed forward into the higher-order bit via the parallel carry chain and feed into both the LUT and the next portion of the carry chain. Carry-select chains can begin in any LE within an LAB.

The speed advantage of the carry-select chain is in the parallel pre-computation of carry chains. Because the LAB carry-in selects the precomputed carry chain, not every LE is in the critical path. Only the propagation delay between LAB carry-in generation (LE 5 and LE 10) are now part of the critical path. This feature allows the Stratix GX architecture to implement high-speed counters, adders, multipliers, parity functions, and comparators of arbitrary width.

Figure 4–7 shows the carry-select circuitry in an LAB for a 10-bit full adder. One portion of the LUT generates the sum of two bits using the input signals and the appropriate carry-in bit; the sum is routed to the output of the LE. The register can be bypassed for simple adders or used

EP1SGX25DF1020C7 Intel IC FPGA 607 I/O 1020FBGA

for accumulator functions. Another portion of the LUT generates carry-out bits. An LAB-wide carry in bit selects which chain to use for the addition of given inputs. The carry-in signal for each chain, `carry-in0` or `carry-in1`, selects the carry-out to carry forward to the carry-in signal of the next-higher-order bit. The final carry-out signal is routed to an LE, where it is fed to local, row, or column interconnects.

The Quartus II Compiler automatically creates carry chain logic during design processing, or you can create it manually during design entry. Parameterized functions such as LPM functions automatically take advantage of carry chains for the appropriate functions.

The Quartus II Compiler creates carry chains longer than 10 LEs by linking LABs together automatically. For enhanced fitting, a long carry chain runs vertically allowing fast horizontal connections to TriMatrix™ memory and DSP blocks. A carry chain can continue as far as a full column.

Figure 4–7. Carry Select Chain

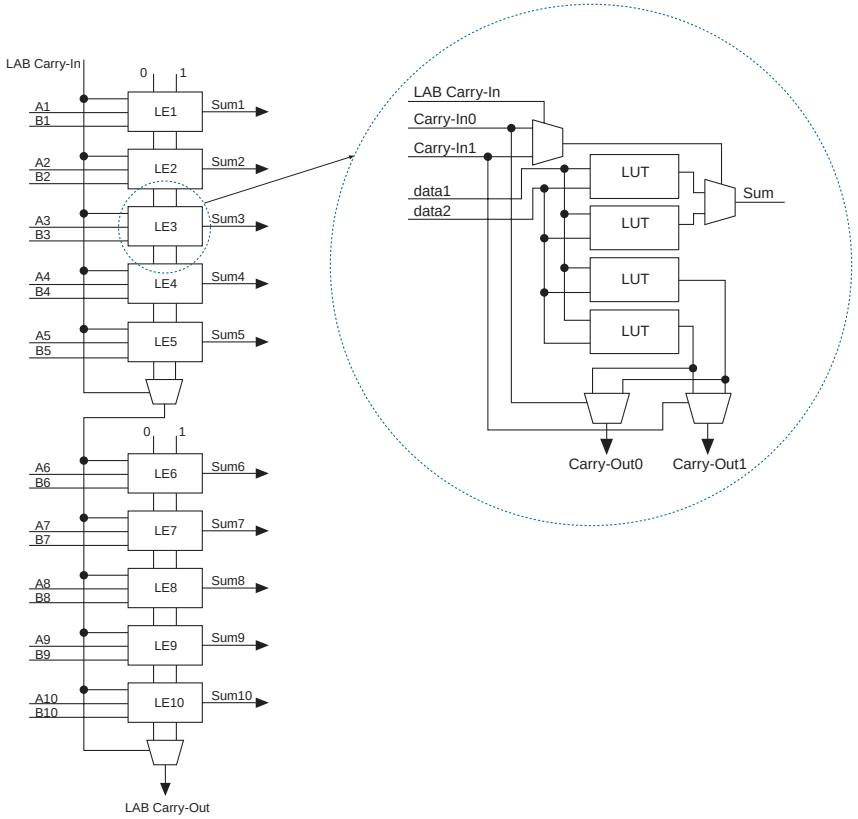

Clear & Preset Logic Control

LAB-wide signals control the logic for the register's clear and preset signals. The LE directly supports an asynchronous clear and preset function. The register preset is achieved through the asynchronous load of a logic high. The direct asynchronous preset does not require a NOT-gate push-back technique. Stratix GX devices support simultaneous preset/ asynchronous load, and clear signals. An asynchronous clear signal takes precedence if both signals are asserted simultaneously. Each LAB supports up to two clears and one preset signal.

In addition to the clear and preset ports, Stratix GX devices provide a chip-wide reset pin (DEV_CLRn) that resets all registers in the device. An option set before compilation in the Quartus II software controls this pin. This chip-wide reset overrides all other control signals.

EP1SGX25DF1020C7 Intel IC FPGA 607 I/O 1020FBGA

MultiTrack Interconnect

In the Stratix GX architecture, connections between LEs, TriMatrix memory, DSP blocks, and device I/O pins are provided by the MultiTrack interconnect structure with DirectDrive™ technology. The MultiTrack interconnect consists of continuous, performance-optimized routing lines of different lengths and speeds used for inter- and intra-design block connectivity. The Quartus II Compiler automatically places critical design paths on faster interconnects to improve design performance.

DirectDrive technology is a deterministic routing technology that ensures identical routing resource usage for any function regardless of placement within the device. The MultiTrack interconnect and DirectDrive technology simplify the integration stage of block-based designing by eliminating the re-optimization cycles that typically follow design changes and additions.

The MultiTrack interconnect consists of row and column interconnects that span fixed distances. A routing structure with fixed length resources for all devices allows predictable and repeatable performance when migrating through different device densities. Dedicated row interconnects route signals to and from LABs, DSP blocks, and TriMatrix memory within the same row. These row resources include:

- Direct link interconnects between LABs and adjacent blocks.
- R4 interconnects traversing four blocks to the right or left.
- R8 interconnects traversing eight blocks to the right or left.
- R24 row interconnects for high-speed access across the length of the device.

The direct link interconnect allows an LAB, DSP block, or TriMatrix memory block to drive into the local interconnect of its left and right neighbors and then back into itself. Only one side of a M-RAM block interfaces with direct link and row interconnects. This provides fast communication between adjacent LABs and/or blocks without using row interconnect resources.

The R4 interconnects span four LABs, three LABs and one M512 RAM block, two LABs and one M4K RAM block, or two LABs and one DSP block to the right or left of a source LAB. These resources are used for fast row connections in a four-LAB region. Every LAB has its own set of R4 interconnects to drive either left or right. Figure 4–8 shows R4 interconnect connections from an LAB. R4 interconnects can drive and be driven by DSP blocks and RAM blocks and horizontal IOEs. For LAB interfacing, a primary LAB or LAB neighbor can drive a given R4 interconnect. For R4 interconnects that drive to the right, the primary LAB and right neighbor can drive on to the interconnect. For R4 interconnects that drive to the left, the primary LAB and its left neighbor

EP1SGX25DF1020C7 Intel IC FPGA 607 I/O 1020FBGA

can drive on to the interconnect. R4 interconnects can drive other R4 interconnects to extend the range of LABs they can drive. R4 interconnects can also drive C4 and C16 interconnects for connections from one row to another. Additionally, R4 interconnects can drive R24 interconnects.

Figure 4–8. R4 Interconnect Connections

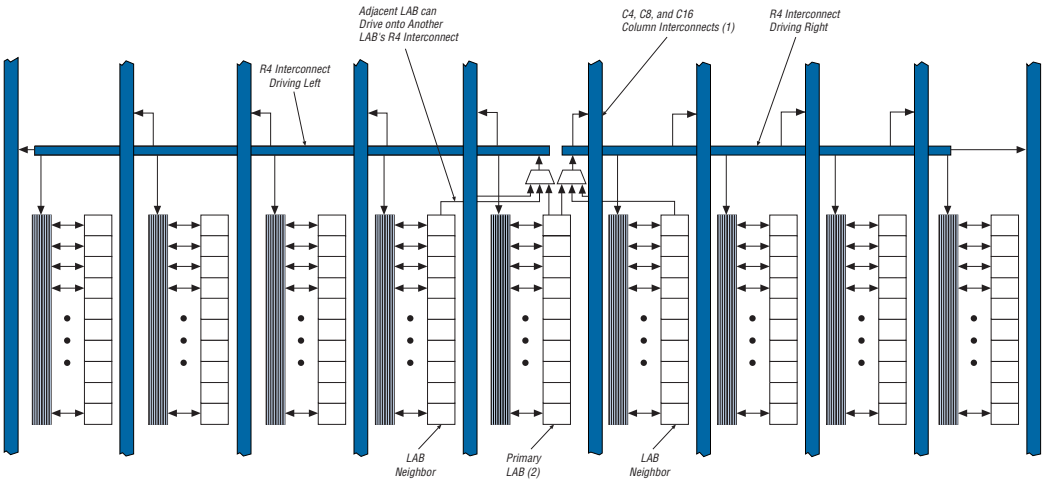

Notes to Figure 4–8:
(1) C4 interconnects can drive R4 interconnects.
(2) This pattern is repeated for every LAB in the LAB row.

The R8 interconnects span eight LABs, M512 or M4K RAM blocks, or DSP blocks to the right or left from a source LAB. These resources are used for fast row connections in an eight-LAB region. Every LAB has its own set of R8 interconnects to drive either left or right. R8 interconnect connections between LABs in a row are similar to the R4 connections shown in Figure 4–8, with the exception that they connect to eight LABs to the right or left, not four. Like R4 interconnects, R8 interconnects can drive and be driven by all types of architecture blocks. R8 interconnects can drive other R8 interconnects to extend their range as well as C8 interconnects for row-to-row connections. One R8 interconnect is faster than two R4 interconnects connected together.

R24 row interconnects span 24 LABs and provide the fastest resource for long row connections between LABs, TriMatrix memory, DSP blocks, and IOEs. The R24 row interconnects can cross M-RAM blocks. R24 row interconnects drive to other row or column interconnects at every fourth

EP1SGX25DF1020C7 Intel IC FPGA 607 I/O 1020FBGA

LAB and do not drive directly to LAB local interconnects. R24 row interconnects drive LAB local interconnects via R4 and C4 interconnects. R24 interconnects can drive R24, R4, C16, and C4 interconnects.

The column interconnect operates similarly to the row interconnect and vertically routes signals to and from LABs, TriMatrix memory, DSP blocks, and IOEs. Each column of LABs is served by a dedicated column interconnect, which vertically routes signals to and from LABs, TriMatrix memory and DSP blocks, and horizontal IOEs. These column resources include:

- LUT chain interconnects within an LAB
- Register chain interconnects within an LAB
- C4 interconnects traversing a distance of four blocks in up and down direction
- C8 interconnects traversing a distance of eight blocks in up and down direction
- C16 column interconnects for high-speed vertical routing through the device

Stratix GX devices include an enhanced interconnect structure within LABs for routing LE output to LE input connections faster using LUT chain connections and register chain connections. The LUT chain connection allows the combinatorial output of an LE to directly drive the fast input of the LE right below it, bypassing the local interconnect. These resources can be used as a high-speed connection for wide fan-in functions from LE 1 to LE 10 in the same LAB. The register chain connection allows the register output of one LE to connect directly to the register input of the next LE in the LAB for fast shift registers. The Quartus II Compiler automatically takes advantage of these resources to improve utilization and performance. Figure 4–9 shows the LUT chain and register chain interconnects.

Figure 4–9. LUT Chain & Register Chain Interconnects

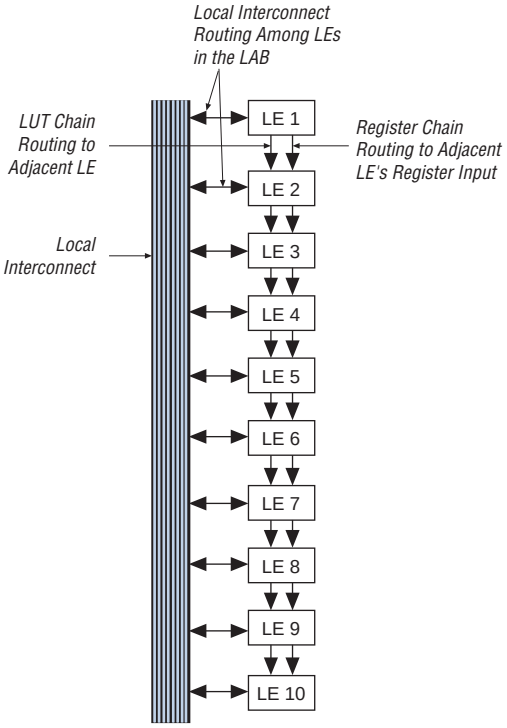

The C4 interconnects span four LABs, M512, or M4K blocks up or down from a source LAB. Every LAB has its own set of C4 interconnects to drive either up or down. Figure 4–10 shows the C4 interconnect connections from an LAB in a column. The C4 interconnects can drive and be driven by all types of architecture blocks, including DSP blocks, TriMatrix memory blocks, and vertical IOEs. For LAB interconnection, a primary LAB or its LAB neighbor can drive a given C4 interconnect.
C4 interconnects can drive each other to extend their range as well as drive row interconnects for column-to-column connections.

Figure 4–10. C4 Interconnect Connections *Note (1)*

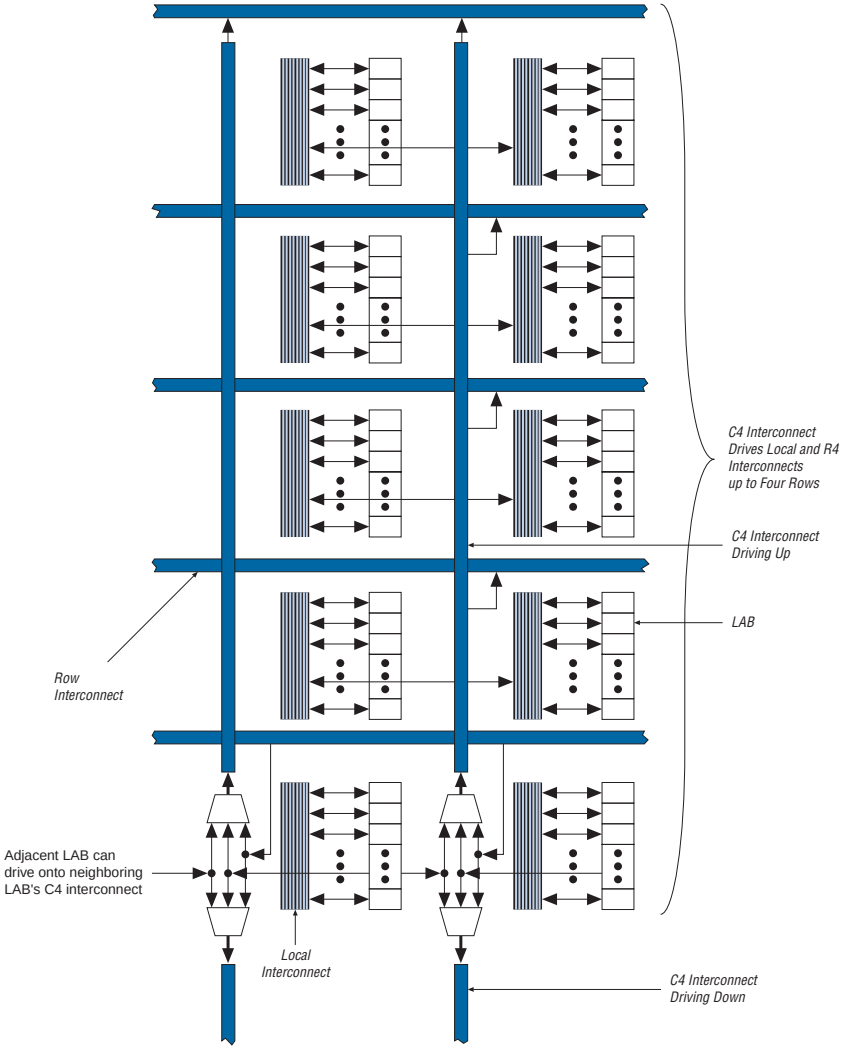

Note to Figure 4–10:
(1) Each C4 interconnect can drive either up or down four rows.

C8 interconnects span eight LABs, M512, or M4K blocks up or down from a source LAB. Every LAB has its own set of C8 interconnects to drive either up or down. C8 interconnect connections between the LABs in a column are similar to the C4 connections shown in Figure 4–10 with the exception that they connect to eight LABs above and below. The C8

EP1SGX25DF1020C7 Intel IC FPGA 607 I/O 1020FBGA

interconnects can drive and be driven by all types of architecture blocks similar to C4 interconnects. C8 interconnects can drive each other to extend their range as well as R8 interconnects for column-to-column connections. C8 interconnects are faster than two C4 interconnects.

C16 column interconnects span a length of 16 LABs and provide the fastest resource for long column connections between LABs, TriMatrix memory blocks, DSP blocks, and IOEs. C16 interconnects can cross M-RAM blocks and also drive to row and column interconnects at every fourth LAB. C16 interconnects drive LAB local interconnects via C4 and R4 interconnects and do not drive LAB local interconnects directly.

All embedded blocks communicate with the logic array similar to LAB-to-LAB interfaces. Each block (that is, TriMatrix memory and DSP blocks) connects to row and column interconnects and has local interconnect regions driven by row and column interconnects. These blocks also have direct link interconnects for fast connections to and from a neighboring LAB. All blocks are fed by the row LAB clocks, `labclk[7..0]`.

Table 4–1 shows the Stratix GX device's routing scheme.

Table 4–1. Stratix GX Device Routing Scheme

Source	Destination																
	LUT Chain	Register Chain	Local Interconnect	Direct Link Interconnect	R4 Interconnect	R8 Interconnect	R24 Interconnect	C4 Interconnect	C8 Interconnect	C16 Interconnect	LE	M512 RAM Block	M4K RAM Block	M-RAM Block	DSP Blocks	Column IOE	Row IOE
LUT Chain											✓						
Register Chain											✓						
Local Interconnect											✓	✓	✓	✓	✓	✓	✓
Direct Link Interconnect			✓														
R4 Interconnect			✓		✓		✓	✓		✓							
R8 Interconnect			✓			✓			✓								
R24 Interconnect					✓		✓	✓		✓							
C4 Interconnect			✓		✓			✓									
C8 Interconnect			✓			✓			✓								
C16 Interconnect					✓		✓	✓		✓							
LE	✓	✓	✓	✓	✓	✓		✓	✓								
M512 RAM Block			✓	✓	✓	✓		✓	✓								
M4K RAM Block			✓	✓	✓	✓		✓	✓								
M-RAM Block								✓	✓								
DSP Blocks			✓	✓	✓	✓		✓	✓								
Column IOE				✓				✓	✓	✓							
Row IOE				✓		✓	✓	✓	✓	✓							

EP1SGX25DF1020C7 Intel IC FPGA 607 I/O 1020FBGA

TriMatrix Memory

TriMatrix memory consists of three types of RAM blocks: M512, M4K, and M-RAM blocks. Although these memory blocks are different, they can all implement various types of memory with or without parity, including true dual-port, simple dual-port, and single-port RAM, ROM, and FIFO buffers. Table 4–2 shows the size and features of the different RAM blocks.

Table 4–2. TriMatrix Memory Features (Part 1 of 2)

Memory Feature	M512 RAM Block (32 × 18 Bits)	M4K RAM Block (128 × 36 Bits)	M-RAM Block (4K × 144 Bits)
Maximum performance	*(1)*	*(1)*	*(1)*
True dual-port memory		✓	✓
Simple dual-port memory	✓	✓	✓
Single-port memory	✓	✓	✓
Shift register	✓	✓	
ROM	✓	✓	*(2)*
FIFO buffer	✓	✓	✓
Byte enable		✓	✓
Parity bits	✓	✓	✓
Mixed clock mode	✓	✓	✓
Memory initialization	✓	✓	
Simple dual-port memory mixed width support	✓	✓	✓
True dual-port memory mixed width support		✓	✓
Power-up conditions	Outputs cleared	Outputs cleared	Outputs unknown
Register clears	Input and output registers	Input and output registers	Output registers
Mixed-port read-during-write	Unknown output/old data	Unknown output/old data	Unknown output

EP1SGX25DF1020C7 Intel IC FPGA 607 I/O 1020FBGA

Table 4–2. TriMatrix Memory Features (Part 2 of 2)

Memory Feature	M512 RAM Block (32 × 18 Bits)	M4K RAM Block (128 × 36 Bits)	M-RAM Block (4K × 144 Bits)
Configurations	512 ×1 256 × 2 128 × 4 64 × 8 64 × 9 32 × 16 32 × 18	4K × 1 2K × 2 1K × 4 512 × 8 512 × 9 256 × 16 256 × 18 128 × 32 128 × 36	64K × 8 64K × 9 32K × 16 32K × 18 16K × 32 16K × 36 8K × 64 8K × 72 4K × 128 4K × 144

Notes to Table 4–2:

(1) See the *DC & Switching Characteristics* chapter of the *Stratix GX Device Handbook, Volume 1* for maximum performance information.

(2) The M-RAM block does not support memory initializations. However, the M-RAM block can emulate a ROM function using a dual-port RAM bock. The Stratix GX device must write to the dual-port memory once and then disable the write-enable ports afterwards.

Memory Modes

TriMatrix memory blocks include input registers that synchronize writes and output registers to pipeline designs and improve system performance. M4K and M-RAM memory blocks offer a true dual-port mode to support any combination of two-port operations: two reads, two writes, or one read and one write at two different clock frequencies. Figure 4–11 shows true dual-port memory.

Figure 4–11. True Dual-Port Memory Configuration

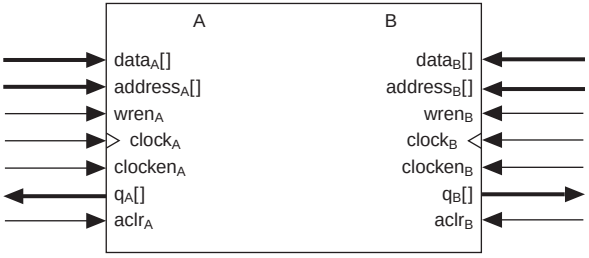

In addition to true dual-port memory, the memory blocks support simple dual-port and single-port RAM. Simple dual-port memory supports a simultaneous read and write and can either read old data before the write

EP1SGX25DF1020C7 Intel IC FPGA 607 I/O 1020FBGA

occurs or just read the don't care bits. Single-port memory supports non-simultaneous reads and writes, but the `q[]` port outputs the data once it has been written to the memory (if the outputs are not registered) or after the next rising edge of the clock (if the outputs are registered). For more information, see the *TriMatrix Embedded Memory Blocks in Stratix & Stratix GX Devices* chapter of the *Stratix GX Device Handbook, Volume 2*. Figure 4–12 shows these different RAM memory port configurations for TriMatrix memory.

Figure 4–12. Simple Dual-Port & Single-Port Memory Configurations

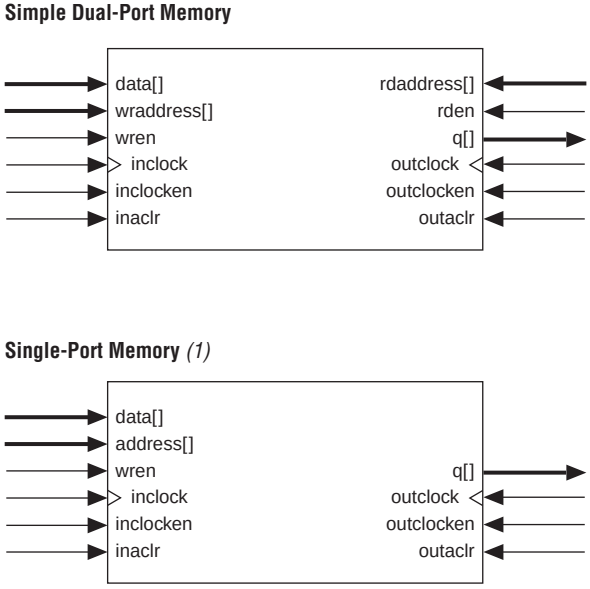

Note to Figure 4–12:

(1) Two single-port memory blocks can be implemented in a single M4K block as long as each of the two independent block sizes is equal to or less than half of the M4K block size.

The memory blocks also enable mixed-width data ports for reading and writing to the RAM ports in dual-port RAM configuration. For example, the memory block can be written in ×1 mode at port A and read out in ×16 mode from port B.

TriMatrix memory architecture can implement pipelined RAM by registering both the input and output signals to the RAM block. All TriMatrix memory block inputs are registered providing synchronous write cycles. In synchronous operation, the memory block generates its own self-timed strobe write enable (`WREN`) signal derived from the global

EP1SGX25DF1020C7 Intel IC FPGA 607 I/O 1020FBGA

or regional clock. In contrast, a circuit using asynchronous RAM must generate the RAM WREN signal while ensuring its data and address signals meet setup and hold time specifications relative to the WREN signal. The output registers can be bypassed. Flow-through reading is possible in the simple dual-port mode of M512 and M4K RAM blocks by clocking the read enable and read address registers on the negative clock edge and bypassing the output registers.

Two single-port memory blocks can be implemented in a single M4K block as long as each of the two independent block sizes is equal to or less than half of the M4K block size.

The Quartus II software automatically implements larger memory by combining multiple TriMatrix memory blocks. For example, two 256 × 16-bit RAM blocks can be combined to form a 256 × 32-bit RAM block. Memory performance does not degrade for memory blocks using the maximum number of words available in one memory block. Logical memory blocks using less than the maximum number of words use physical blocks in parallel, eliminating any external control logic that would increase delays. To create a larger high-speed memory block, the Quartus II software automatically combines memory blocks with LE control logic.

Parity Bit Support

The memory blocks support a parity bit for each byte. The parity bit, along with internal LE logic, can implement parity checking for error detection to ensure data integrity. You can also use parity-size data words to store user-specified control bits. In the M4K and M-RAM blocks, byte enables are also available for data input masking during write operations.

Shift Register Support

You can configure embedded memory blocks to implement shift registers for DSP applications such as pseudo-random number generators, multi-channel filtering, auto-correlation, and cross-correlation functions. These and other DSP applications require local data storage, traditionally implemented with standard flip-flops, which can quickly consume many logic cells and routing resources for large shift registers. A more efficient alternative is to use embedded memory as a shift register block, which saves logic cell and routing resources and provides a more efficient implementation with the dedicated circuitry.

The size of a $w \times m \times n$ shift register is determined by the input data width (w), the length of the taps (m), and the number of taps (n). The size of a $w \times m \times n$ shift register must be less than or equal to the maximum number of memory bits in the respective block: 576 bits for the M512

RAM block and 4,608 bits for the M4K RAM block. The total number of shift register outputs (number of taps n × width w) must be less than the maximum data width of the RAM block (18 for M512 blocks, 36 for M4K blocks). To create larger shift registers, the memory blocks are cascaded together.

Data is written into each address location at the falling edge of the clock and read from the address at the rising edge of the clock. The shift register mode logic automatically controls the positive and negative edge clocking to shift the data in one clock cycle. Figure 4–13 shows the TriMatrix memory block in the shift register mode.

Figure 4–13. Shift Register Memory Configuration

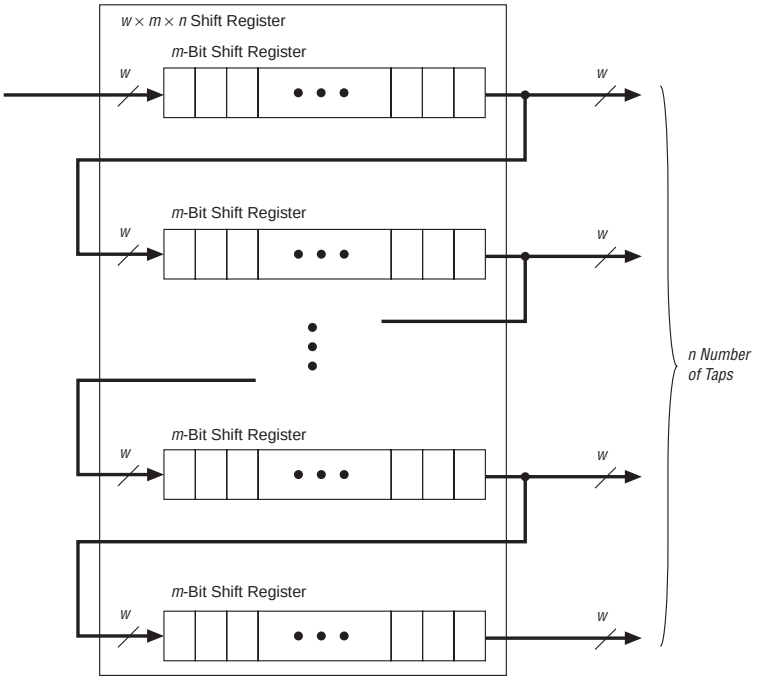

Memory Block Size

TriMatrix memory provides three different memory sizes for efficient application support. The large number of M512 blocks are ideal for designs with many shallow first-in first-out (FIFO) buffers. M4K blocks provide additional resources for channelized functions that do not require large amounts of storage. The M-RAM blocks provide a large

EP1SGX25DF1020C7 Intel IC FPGA 607 I/O 1020FBGA

single block of RAM ideal for data packet storage. The different-sized blocks allow Stratix GX devices to efficiently support variable-sized memory in designs.

The Quartus II software automatically partitions the user-defined memory into the embedded memory blocks using the most efficient size combinations. You can also manually assign the memory to a specific block size or a mixture of block sizes.

M512 RAM Block

The M512 RAM block is a simple dual-port memory block and is useful for implementing small FIFO buffers, DSP, and clock domain transfer applications. Each block contains 576 RAM bits (including parity bits). M512 RAM blocks can be configured in the following modes:

- Simple dual-port RAM
- Single-port RAM
- FIFO
- ROM
- Shift register

When configured as RAM or ROM, you can use an initialization file to pre-load the memory contents.

The memory address depths and output widths can be configured as 512 × 1, 256 × 2, 128 × 4, 64 × 8 (64 × 9 bits with parity), and 32 × 16 (32 × 18 bits with parity). Mixed-width configurations are also possible, allowing different read and write widths. Table 4–3 summarizes the possible M512 RAM block configurations.

Table 4–3. M512 RAM Block Configurations (Simple Dual-Port RAM)

Read Port	Write Port						
	512 × 1	256 × 2	128 × 4	64 × 8	32 × 16	64 × 9	32 × 18
512 × 1	✓	✓	✓	✓	✓		
256 × 2	✓	✓	✓	✓	✓		
128 × 4	✓	✓	✓		✓		
64 × 8	✓	✓		✓			
32 × 16	✓	✓	✓		✓		
64 × 9						✓	
32 × 18							✓

EP1SGX25DF1020C7 Intel IC FPGA 607 I/O 1020FBGA

When the M512 RAM block is configured as a shift register block, a shift register of size up to 576 bits is possible.

The M512 RAM block can also be configured to support serializer and deserializer applications. By using the mixed-width support in combination with DDR I/O standards, the block can function as a SERDES to support low-speed serial I/O standards using global or regional clocks. See "I/O Structure" on page 4–96 for details on dedicated SERDES in Stratix GX devices.

M512 RAM blocks can have different clocks on its inputs and outputs. The `wren`, `datain`, and write address registers are all clocked together from one of the two clocks feeding the block. The read address, `rden`, and output registers can be clocked by either of the two clocks driving the block. This allows the RAM block to operate in read/write or input/output clock modes. Only the output register can be bypassed. The eight `labclk` signals or local interconnect can drive the `inclock`, `outclock`, `wren`, `rden`, `inclr`, and `outclr` signals. Because of the advanced interconnect between the LAB and M512 RAM blocks, LEs can also control the `wren` and `rden` signals and the RAM clock, clock enable, and asynchronous clear signals. Figure 4–14 shows the M512 RAM block control signal generation logic.

The RAM blocks within Stratix GX devices have local interconnects to allow LEs and interconnects to drive into RAM blocks. The M512 RAM block local interconnect is driven by the R4, R8, C4, C8, and direct link interconnects from adjacent LABs. The M512 RAM blocks can communicate with LABs on either the left or right side through these row interconnects or with LAB columns on the left or right side with the column interconnects. Up to 10 direct link input connections to the M512 RAM block are possible from the left adjacent LABs and another 10 possible from the right adjacent LAB. M512 RAM outputs can also connect to left and right LABs through 10 direct link interconnects. The M512 RAM block has equal opportunity for access and performance to and from LABs on either its left or right side. Figure 4–15 shows the M512 RAM block to logic array interface.

Figure 4–14. M512 RAM Block Control Signals

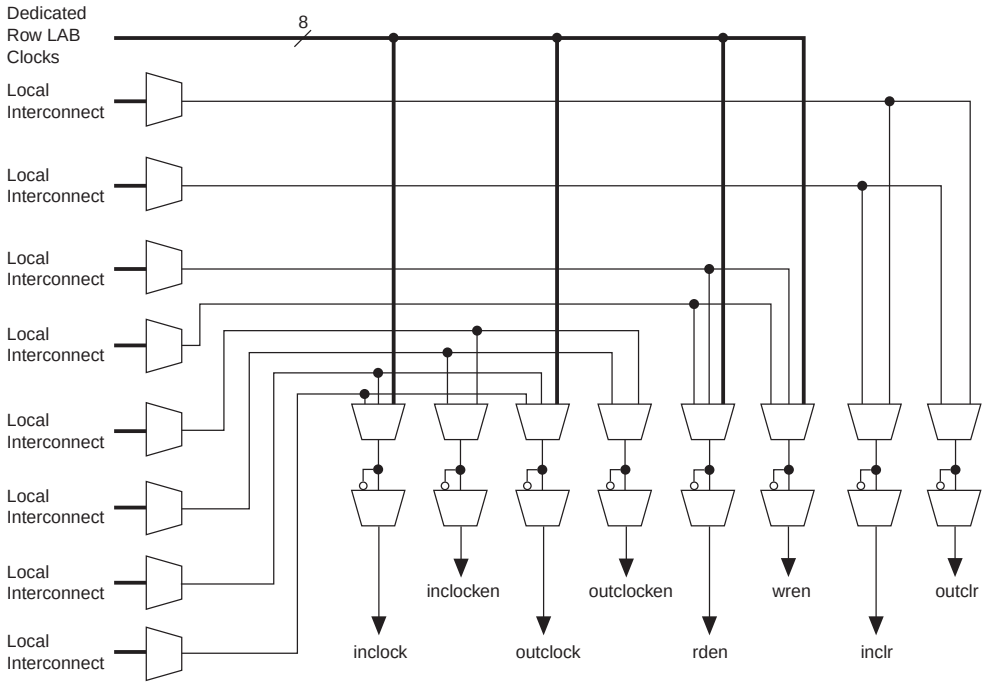

Figure 4–15. M512 RAM Block LAB Row Interface

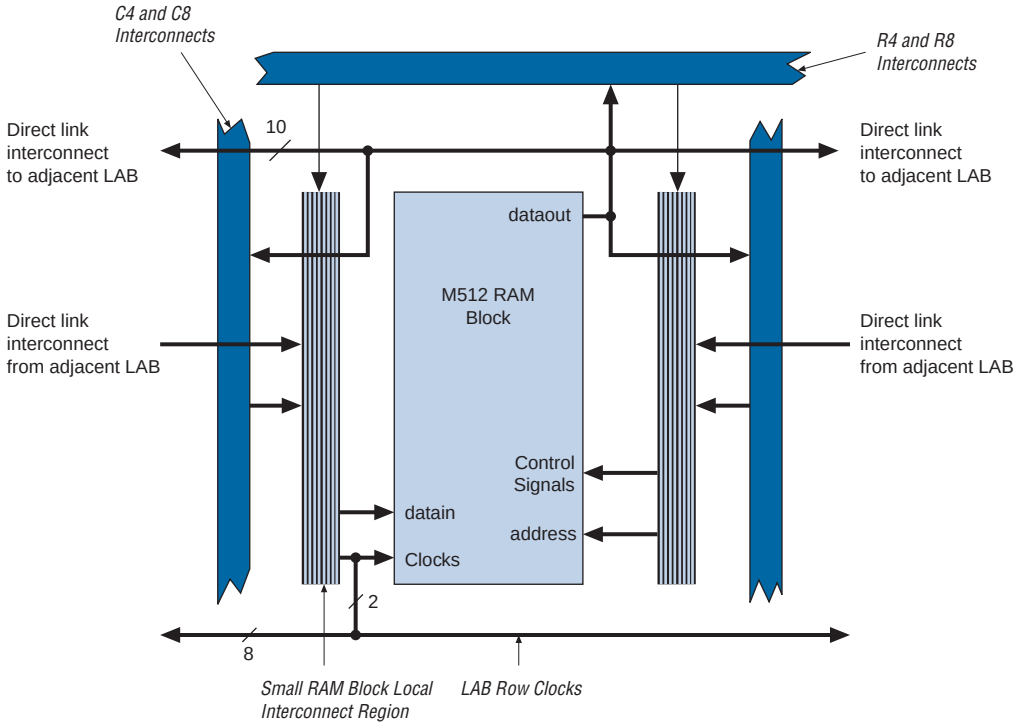

M4K RAM Blocks

The M4K RAM block includes support for true dual-port RAM. The M4K RAM block implements buffers for a wide variety of applications such as storing processor code, implementing lookup schemes, and implementing larger memory applications. Each block contains 4,608 RAM bits (including parity bits). M4K RAM blocks can be configured in the following modes:

- True dual-port RAM
- Simple dual-port RAM
- Single-port RAM
- FIFO
- ROM
- Shift register

When configured as RAM or ROM, you can use an initialization file to pre-load the memory contents.

EP1SGX25DF1020C7 Intel IC FPGA 607 I/O 1020FBGA

The memory address depths and output widths can be configured as 4,096 × 1, 2,048 × 2, 1,024 × 4, 512 × 8 (or 512 × 9 bits), 256 × 16 (or 256 × 18 bits), and 128 × 32 (or 128 × 36 bits). The 128 × 32- or 36-bit configuration is not available in the true dual-port mode. Mixed-width configurations are also possible, allowing different read and write widths. Tables 4–4 and 4–5 summarize the possible M4K RAM block configurations.

Table 4–4. M4K RAM Block Configurations (Simple Dual-Port)

Read Port	Write Port								
	4K 1	2K × 2	1K ° 4	512 ° 8	256 ° 16	128 ° 32	512 ° 9	256 ° 18	128 ° 36
4K × 1	✓	✓	✓	✓	✓	✓			
2K × 2	✓	✓	✓	✓	✓	✓			
1K × 4	✓	✓	✓	✓	✓	✓			
512 × 8	✓	✓	✓	✓	✓	✓			
256 × 16	✓	✓	✓	✓	✓	✓			
128 × 32	✓	✓	✓	✓	✓	✓			
512 × 9							✓	✓	✓
256 × 18							✓	✓	✓
128 × 36							✓	✓	✓

Table 4–5. M4K RAM Block Configurations (True Dual-Port)

Port A	Port B						
	4K × 1	2K × 2	1K × 4	512 × 8	256 × 16	512 × 9	256 × 18
4K × 1	✓	✓	✓	✓	✓		
2K × 2	✓	✓	✓	✓	✓		
1K × 4	✓	✓	✓	✓	✓		
512 × 8	✓	✓	✓	✓	✓		
256 × 16	✓	✓	✓	✓	✓		
512 × 9						✓	✓
256 × 18						✓	✓

When the M4K RAM block is configured as a shift register block, you can create a shift register up to 4,608 bits ($w \times m \times n$).

EP1SGX25DF1020C7 Intel IC FPGA 607 I/O 1020FBGA

M4K RAM blocks support byte writes when the write port has a data width of 16, 18, 32, or 36 bits. The byte enables allow the input data to be masked so the device can write to specific bytes. The unwritten bytes retain the previous written value. Table 4–6 summarizes the byte selection.

Table 4–6. Byte Enable for M4K Blocks Notes (1), (2)

byteena[3..0]	datain ×18	datain ×36
[0] = 1	[8..0]	[8..0]
[1] = 1	[17..9]	[17..9]
[2] = 1	–	[26..18]
[3] = 1	–	[35..27]

Notes to Table 4–6:
(1) Any combination of byte enables is possible.
(2) Byte enables can be used in the same manner with 8-bit words, that is, in ×16 and ×32 modes.

The M4K RAM blocks allow for different clocks on their inputs and outputs. Either of the two clocks feeding the block can clock M4K RAM block registers (`renwe`, address, byte enable, `datain`, and output registers). Only the output register can be bypassed. The eight `labclk` signals or local interconnects can drive the control signals for the A and B ports of the M4K RAM block. LEs can also control the `clock_a`, `clock_b`, `renwe_a`, `renwe_b`, `clr_a`, `clr_b`, `clocken_a`, and `clocken_b` signals, as shown in Figure 4–16.

The R4, R8, C4, C8, and direct link interconnects from adjacent LABs drive the M4K RAM block local interconnect. The M4K RAM blocks can communicate with LABs on either the left or right side through these row resources or with LAB columns on either the right or left with the column resources. Up to 10 direct link input connections to the M4K RAM Block are possible from the left adjacent LABs and another 10 possible from the right adjacent LAB. M4K RAM block outputs can also connect to left and right LABs through 10 direct link interconnects each. Figure 4–17 shows the M4K RAM block to logic array interface.

Figure 4–16. M4K RAM Block Control Signals

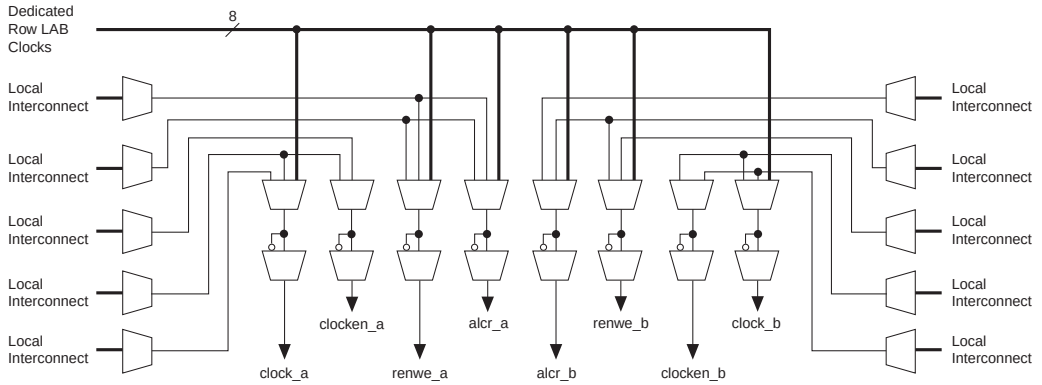

Figure 4–17. M4K RAM Block LAB Row Interface

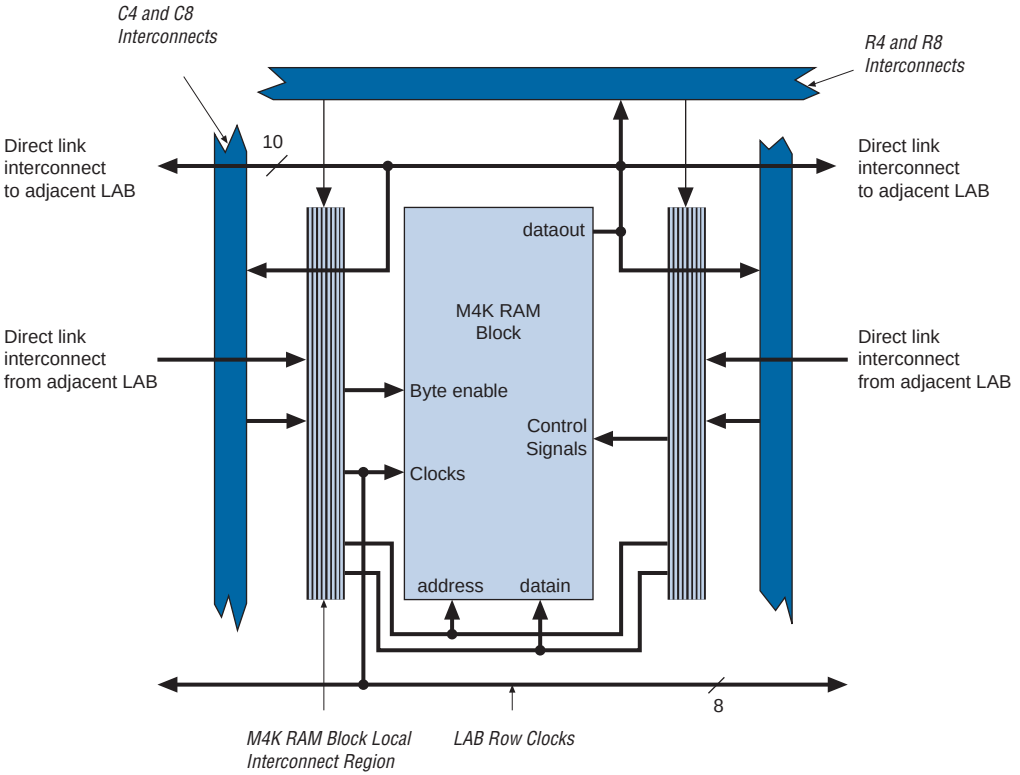

M-RAM Block

The largest TriMatrix memory block, the M-RAM block, is useful for applications where a large volume of data must be stored on-chip. Each block contains 589,824 RAM bits (including parity bits). The M-RAM block can be configured in the following modes:

- True dual-port RAM
- Simple dual-port RAM
- Single-port RAM
- FIFO RAM

You cannot use an initialization file to initialize the contents of a M-RAM block. All M-RAM block contents power up to an undefined value. Only synchronous operation is supported in the M-RAM block, so all inputs are registered. Output registers can be bypassed. The memory address and output width can be configured as 64K × 8 (or 64K × 9 bits), 32K × 16 (or 32K × 18 bits), 16K × 32 (or 16K × 36 bits), 8K × 64 (or 8K × 72 bits), and 4K × 128 (or 4K × 144 bits). The 4K × 128 configuration is unavailable in true dual-port mode because there are a total of 144 data output drivers in the block. Mixed-width configurations are also possible, allowing different read and write widths. Tables 4–7 and 4–8 summarize the possible M-RAM block configurations:

Table 4–7. M-RAM Block Configurations (Simple Dual-Port)

Read Port	Write Port				
	64K × 9	32K × 18	16K × 36	8K × 72	4K × 144
64K × 9	✓	✓	✓	✓	
32K × 18	✓	✓	✓	✓	
16K × 36	✓	✓	✓	✓	
8K × 72	✓	✓	✓	✓	
4K × 144					✓

EP1SGX25DF1020C7 Intel IC FPGA 607 I/O 1020FBGA

Table 4–8. M-RAM Block Configurations (True Dual-Port)				
Port A	**Port B**			
	64K × 9	**32K × 18**	**16K × 36**	**8K × 72**
64K × 9	✓	✓	✓	✓
32K × 18	✓	✓	✓	✓
16K × 36	✓	✓	✓	✓
8K × 72	✓	✓	✓	✓

The read and write operation of the memory is controlled by the WREN signal, which sets the ports into either read or write modes. There is no separate read enable (RE) signal.

Writing into RAM is controlled by both the WREN and byte enable (byteena) signals for each port. The default value for the byteena signal is high, in which case writing is controlled only by the WREN signal. The byte enables are available for the ×18, ×36, and ×72 modes. In the ×144 simple dual-port mode, the two sets of byteena signals (byteena_a and byteena_b) are combined to form the necessary 16 byte enables. Tables 4–9 and 4–10 summarize the byte selection.

Table 4–9. Byte Enable for M-RAM Blocks Notes (1), (2)			
byteena[3..0]	**datain ×18**	**datain ×36**	**datain ×72**
[0] = 1	[8..0]	[8..0]	[8..0]
[1] = 1	[17..9]	[17..9]	[17..9]
[2] = 1	–	[26..18]	[26..18]
[3] = 1	–	[35..27]	[35..27]
[4] = 1	–	–	[44..36]
[5] = 1	–	–	[53..45]
[6] = 1	–	–	[62..54]
[7] = 1	–	–	[71..63]

Table 4–10. M-RAM Combined Byte Selection for ×144 Mode Notes (1), (2)	
byteena[15..0]	**datain ×144**
[0] = 1	[8..0]
[1] = 1	[17..9]
[2] = 1	[26..18]
[3] = 1	[35..27]
[4] = 1	[44..36]
[5] = 1	[53..45]
[6] = 1	[62..54]
[7] = 1	[71..63]
[8] = 1	[80..72]
[9] = 1	[89..81]
[10] = 1	[98..90]
[11] = 1	[107..99]
[12] = 1	[116..108]
[13] = 1	[125..117]
[14] = 1	[134..126]
[15] = 1	[143..135]

Notes to Tables 4–9 and 4–10:

(1) Any combination of byte enables is possible.

(2) Byte enables can be used in the same manner with 8-bit words, that is, in ×16, ×32, ×64, and ×128 modes.

Similar to all RAM blocks, M-RAM blocks can have different clocks on their inputs and outputs. All input registers—`renwe`, `datain`, address, and byte enable registers—are clocked together from either of the two clocks feeding the block. The output register can be bypassed. The eight `labclk` signals or local interconnect can drive the control signals for the A and B ports of the M-RAM block. LEs can also control the `clock_a`, `clock_b`, `renwe_a`, `renwe_b`, `clr_a`, `clr_b`, `clocken_a`, and `clocken_b` signals as shown in Figure 4–18.

Figure 4–18. M-RAM Block Control Signals

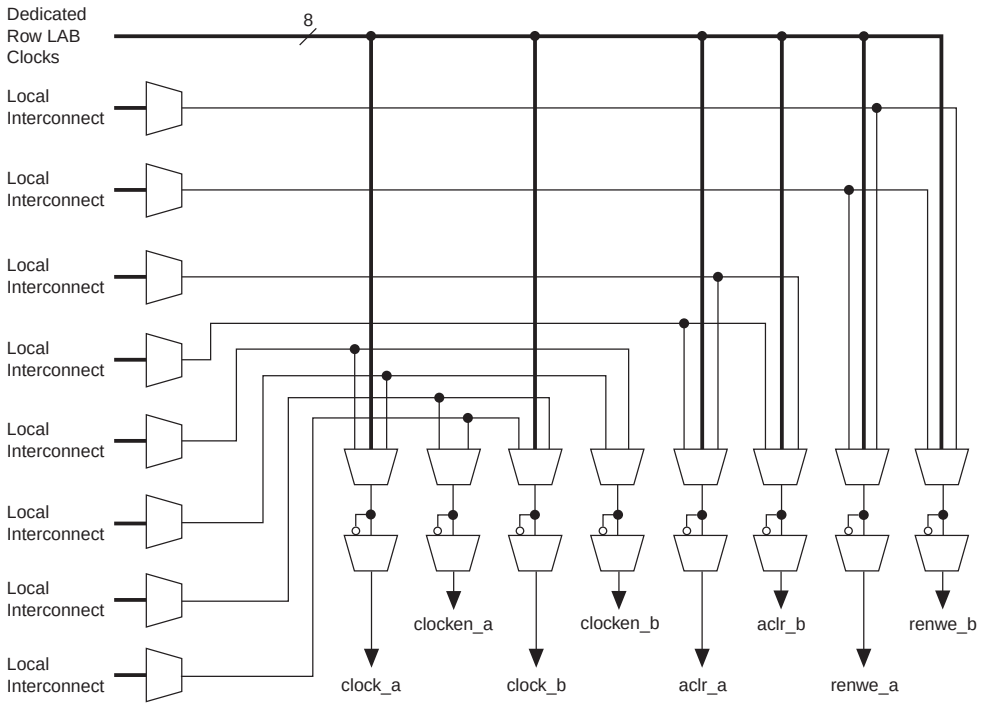

One of the M-RAM block's horizontal sides drive the address and control signal (clock, `renwe`, `byteena`, etc.) inputs. Typically, the horizontal side closest to the device perimeter contains the interfaces. The one exception is when two M-RAM blocks are paired next to each other. In this case, the side of the M-RAM block opposite the common side of the two blocks contains the input interface. The top and bottom sides of any M-RAM block contain data input and output interfaces to the logic array. The top side has 72 data inputs and 72 data outputs for port B, and the bottom side has another 72 data inputs and 72 data outputs for port A. Figure 4–19 shows an example floorplan for the EP1SGX40 device and the location of the M-RAM interfaces.

Figure 4–19. EP1SGX40 Device with M-RAM Interface Locations *Note (1)*

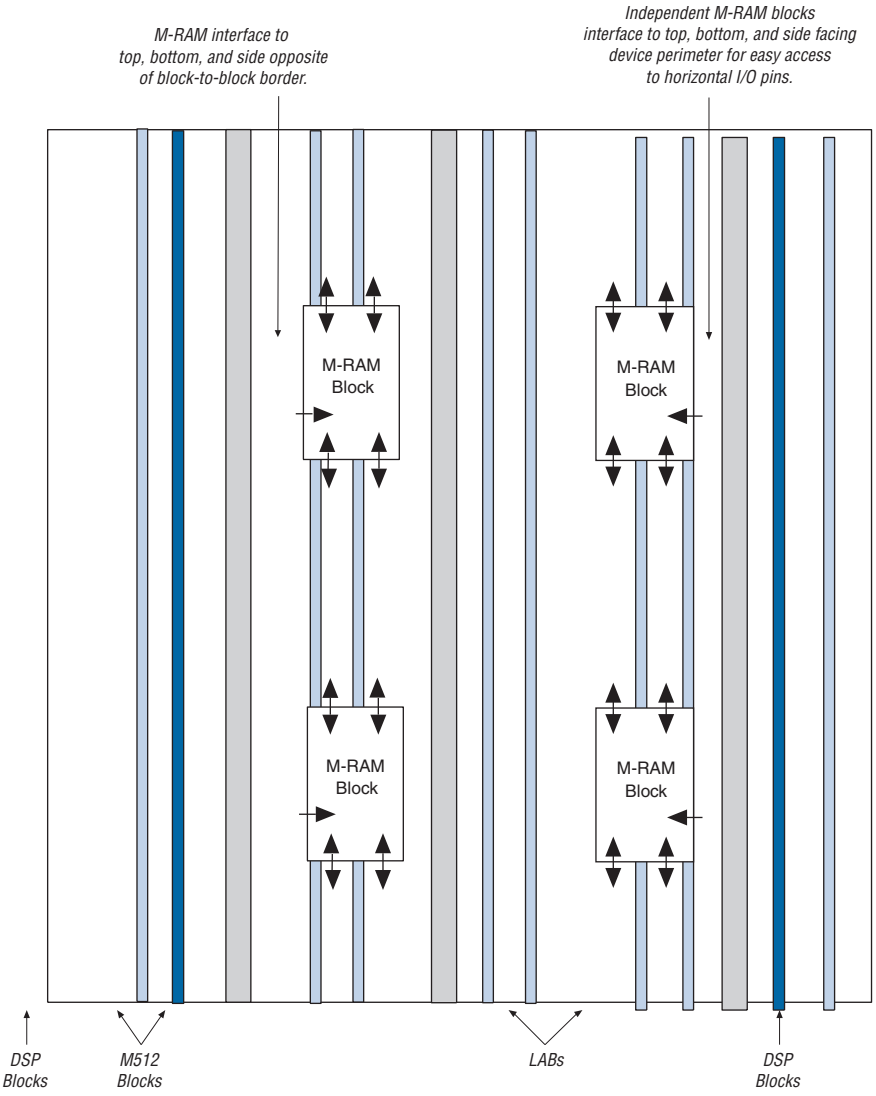

Note to Figure 4–19:

(1) Device shown is an EP1SGX40 device. The number and position of M-RAM blocks varies in other devices.

The M-RAM block local interconnect is driven by the R4, R8, C4, C8, and direct link interconnects from adjacent LABs. For independent M-RAM blocks, up to 10 direct link address and control signal input connections to the M-RAM block are possible from the left adjacent LABs for M-RAM

EP1SGX25DF1020C7 Intel IC FPGA 607 I/O 1020FBGA

blocks facing to the left, and another 10 possible from the right adjacent LABs for M-RAM blocks facing to the right. For column interfacing, every M-RAM column unit connects to the right and left column lines, allowing each M-RAM column unit to communicate directly with three columns of LABs. Figures 4–20 through 4–22 show the interface between the M-RAM block and the logic array.

Figure 4–20. Left-Facing M-RAM to Interconnect Interface *Notes (1), (2)*

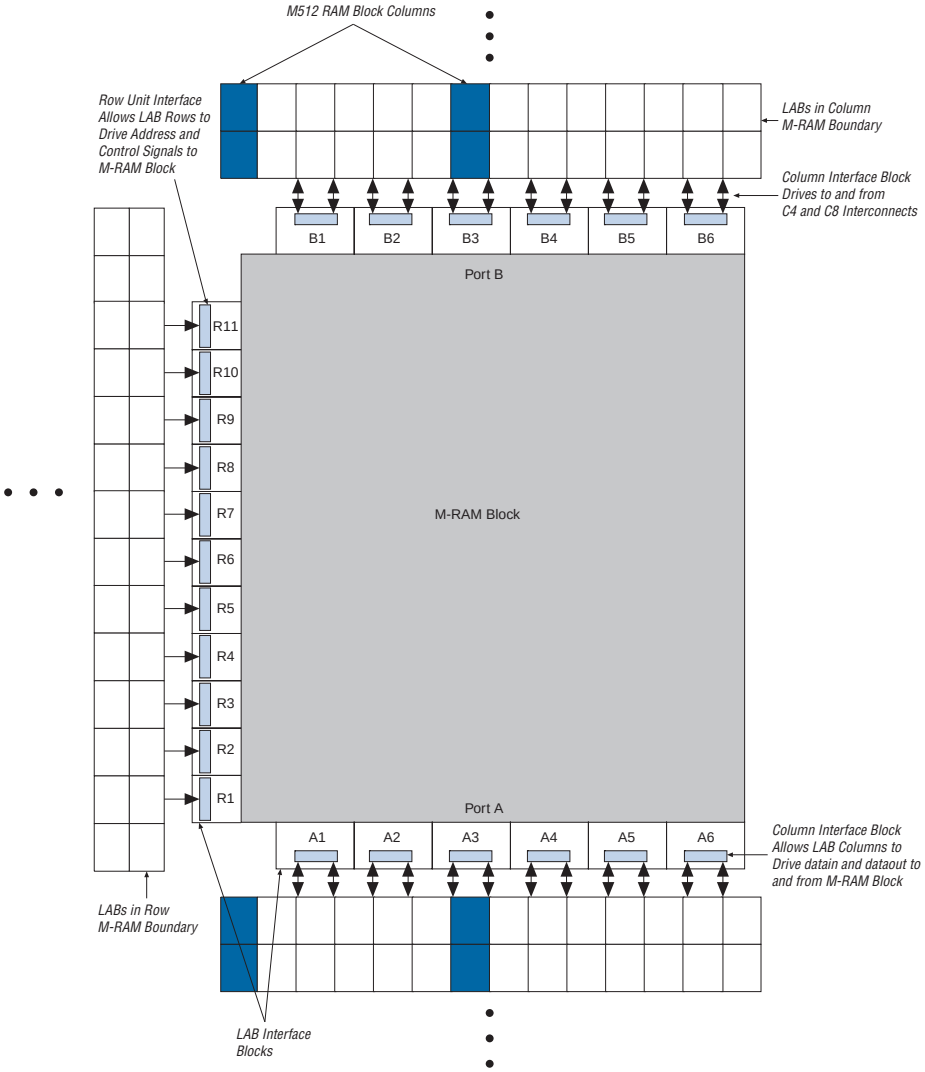

Notes to Figure 4–20:

(1) Only R24 and C16 interconnects cross the M-RAM block boundaries.

(2) The right-facing M-RAM block has interface blocks on the right side, but none on the left. B1 to B6 and A1 to A6 orientation is clipped across the vertical axis for right-facing M-RAM blocks.

EP1SGX25DF1020C7 Intel IC FPGA 607 I/O 1020FBGA

Figure 4–21. M-RAM Row Unit Interface to Interconnect

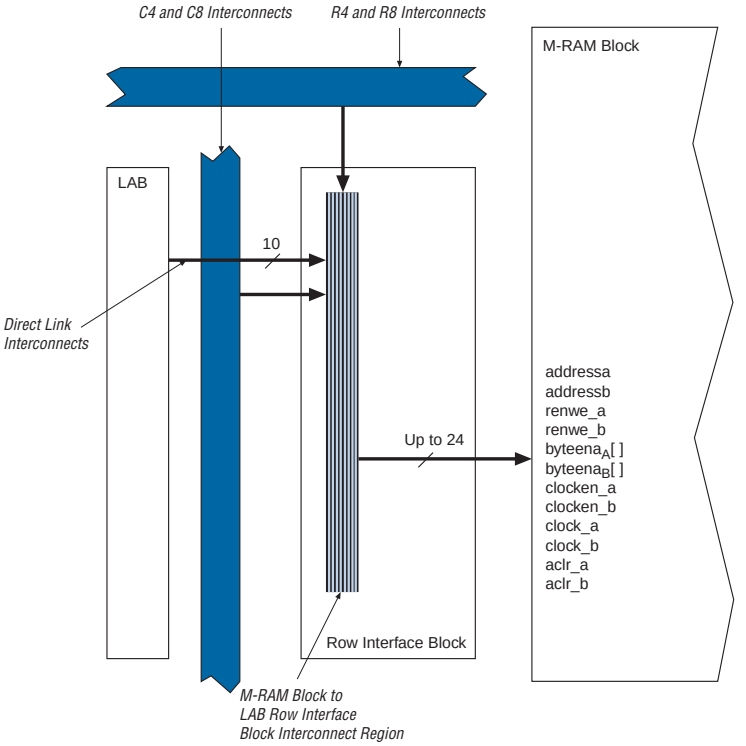

Figure 4–22. M-RAM Column Unit Interface to Interconnect

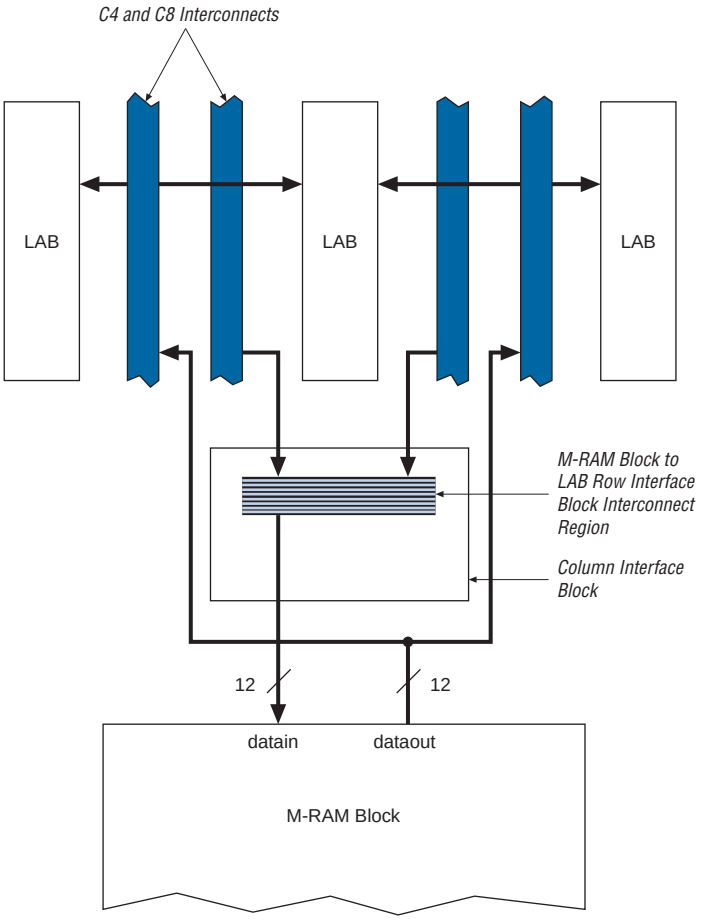

EP1SGX25DF1020C7 Intel IC FPGA 607 I/O 1020FBGA

Table 4–11 shows the input and output data signal connections for the column units (B1 to B6 and A1 to A6). It also shows the address and control signal input connections to the row units (R1 to R11).

Table 4–11. M-RAM Row & Column Interface Unit Signals

Unit Interface Block	Input SIgnals	Output Signals
R1	addressa[7..0]	
R2	addressa[15..8]	
R3	byte_enable_a[7..0] renwe_a	
R4	-	
R5	-	
R6	clock_a clocken_a clock_b clocken_b	
R7	-	
R8	-	
R9	byte_enable_b[7..0] renwe_b	
R10	addressb[15..8]	
R11	addressb[7..0]	
B1	datain_b[71..60]	dataout_b[71..60]
B2	datain_b[59..48]	dataout_b[59..48]
B3	datain_b[47..36]	dataout_b[47..36]
B4	datain_b[35..24]	dataout_b[35..24]
B5	datain_b[23..12]	dataout_b[23..12]
B6	datain_b[11..0]	dataout_b[11..0]
A1	datain_a[71..60]	dataout_a[71..60]
A2	datain_a[59..48]	dataout_a[59..48]
A3	datain_a[47..36]	dataout_a[47..36]
A4	datain_a[35..24]	dataout_a[35..24]
A5	datain_a[23..12]	dataout_a[23..12]
A6	datain_a[11..0]	dataout_a[11..0]

EP1SGX25DF1020C7 Intel IC FPGA 607 I/O 1020FBGA

Independent Clock Mode

The memory blocks implement independent clock mode for true dual-port memory. In this mode, a separate clock is available for each port (ports A and B). Clock A controls all registers on the port A side, while clock B controls all registers on the port B side. Each port, A and B, also supports independent clock enables and asynchronous clear signals for port A and B registers. Figure 4–23 shows a TriMatrix memory block in independent clock mode.

Figure 4–23. Independent Clock Mode *Note (1)*

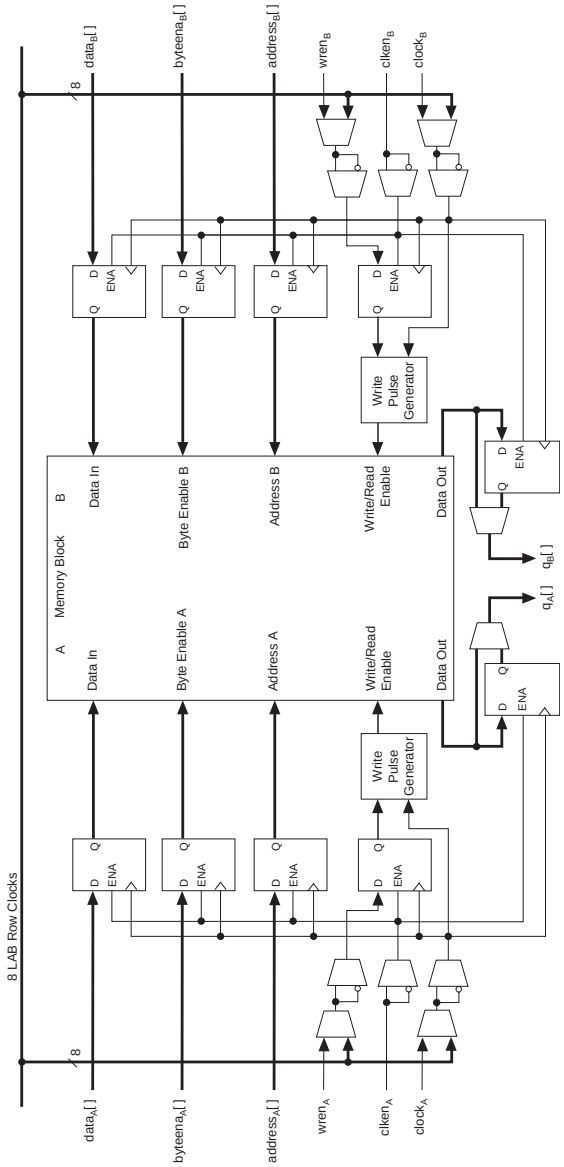

Note to Figure 4–23:
(1) All registers shown have asynchronous clear ports.

EP1SGX25DF1020C7 Intel IC FPGA 607 I/O 1020FBGA

Input/Output Clock Mode

Input/output clock mode can be implemented for both the true and simple dual-port memory modes. On each of the two ports, A or B, one clock controls all registers for inputs into the memory block: data input, `wren`, and address. The other clock controls the block's data output registers. Each memory block port, A or B, also supports independent clock enables and asynchronous clear signals for input and output registers. Figures 4–24 and 4–25 show the memory block in input/output clock mode.

Figure 4–24. Input/Output Clock Mode in True Dual-Port Mode *Note (1)*

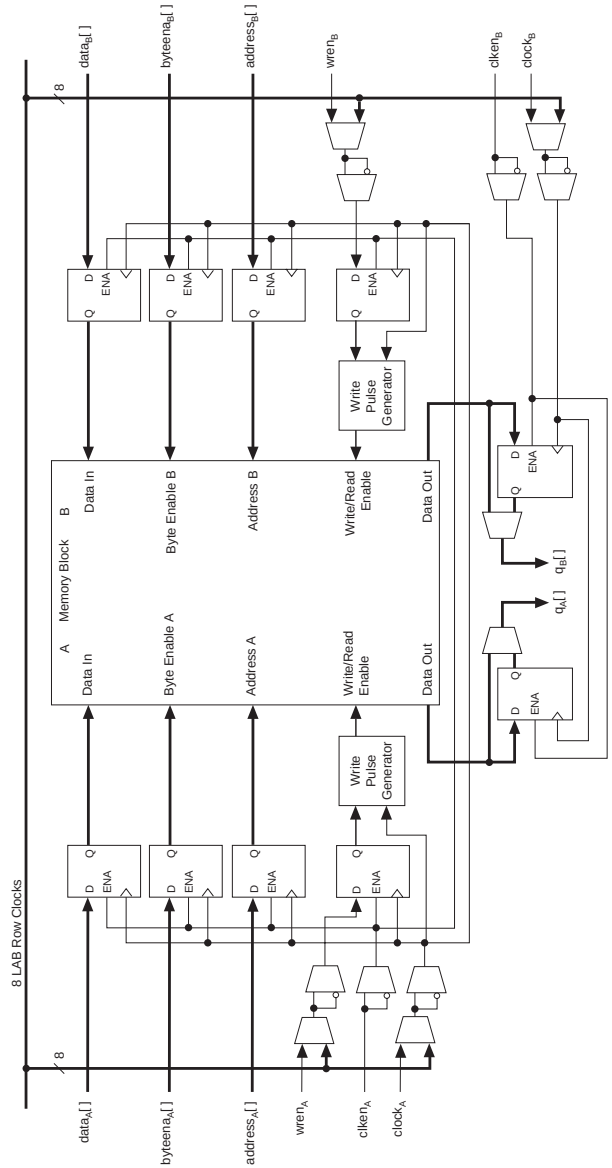

Note to Figure 4–24:

(1) All registers shown have asynchronous clear ports.

Figure 4–25. Input/Output Clock Mode in Simple Dual-Port Mode *Note (1)*

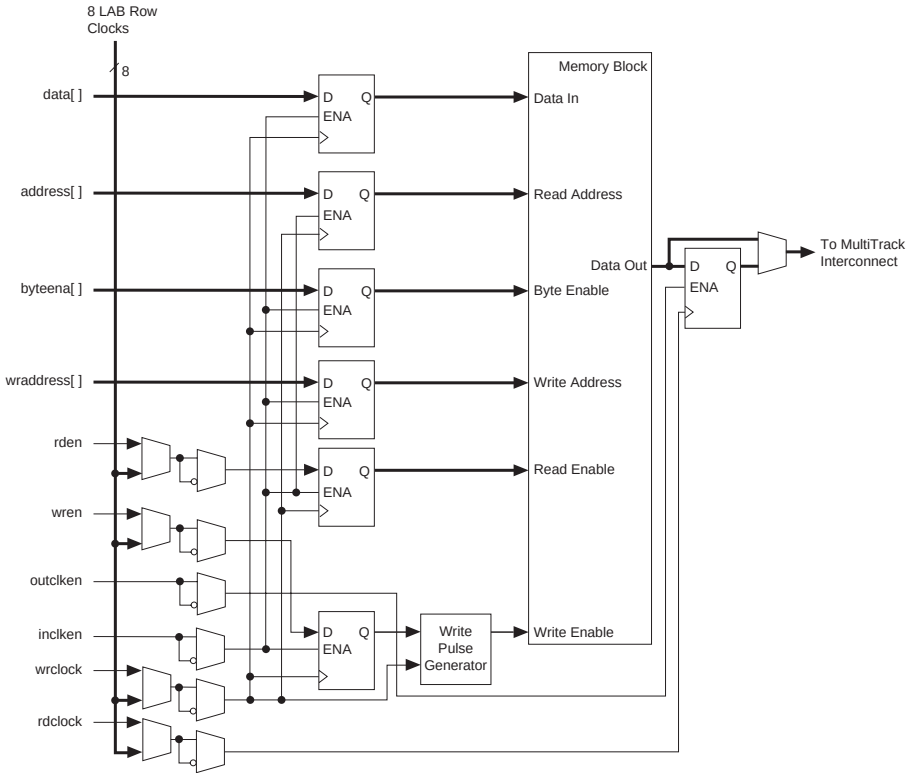

Note to Figure 4–25:
(1) All registers shown except the `rden` register have asynchronous clear ports.

Read/Write Clock Mode

The memory blocks implement read/write clock mode for simple dual-port memory. You can use up to two clocks in this mode. The write clock controls the block's data inputs, `wraddress`, and `wren`. The read clock controls the data output, `rdaddress`, and `rden`. The memory blocks support independent clock enables for each clock and asynchronous clear signals for the read- and write-side registers. Figure 4–26 shows a memory block in read/write clock mode.

Figure 4–26. Read/Write Clock Mode in Simple Dual-Port Mode *Note (1)*

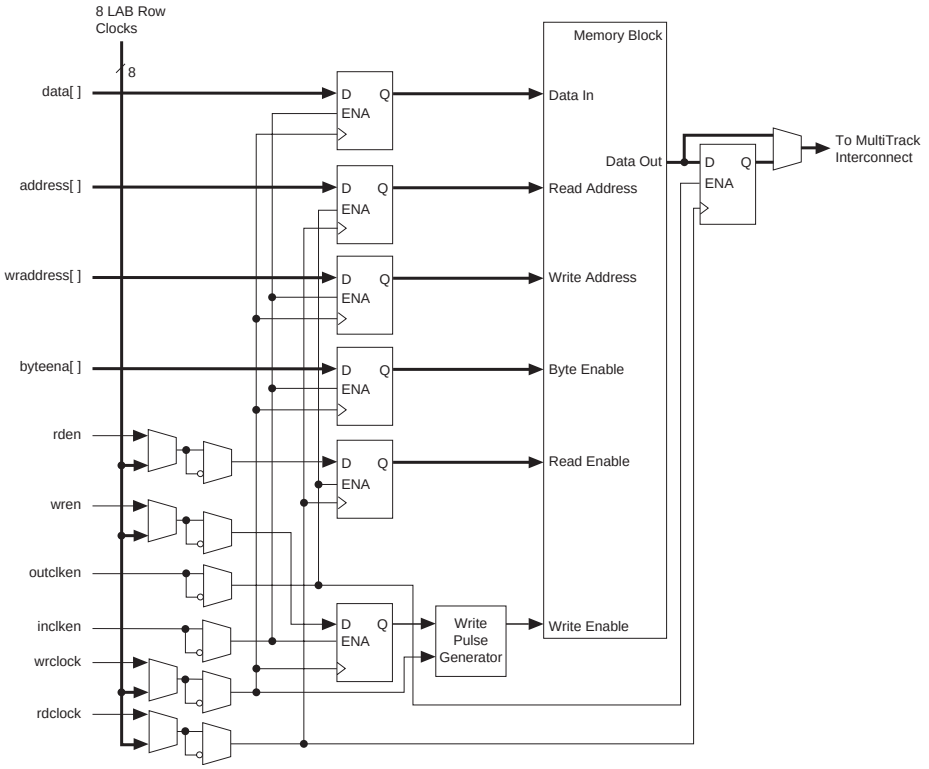

Note to Figure 4–26:
(1) All registers shown except the `rden` register have asynchronous clear ports.

Single-Port Mode

The memory blocks also support single-port mode, used when simultaneous reads and writes are not required. See Figure 4–27. A single block in a memory block can support up to two single-port mode RAM blocks in the M4K RAM blocks if each RAM block is less than or equal to 2K bits in size.

Figure 4–27. Single-Port Mode

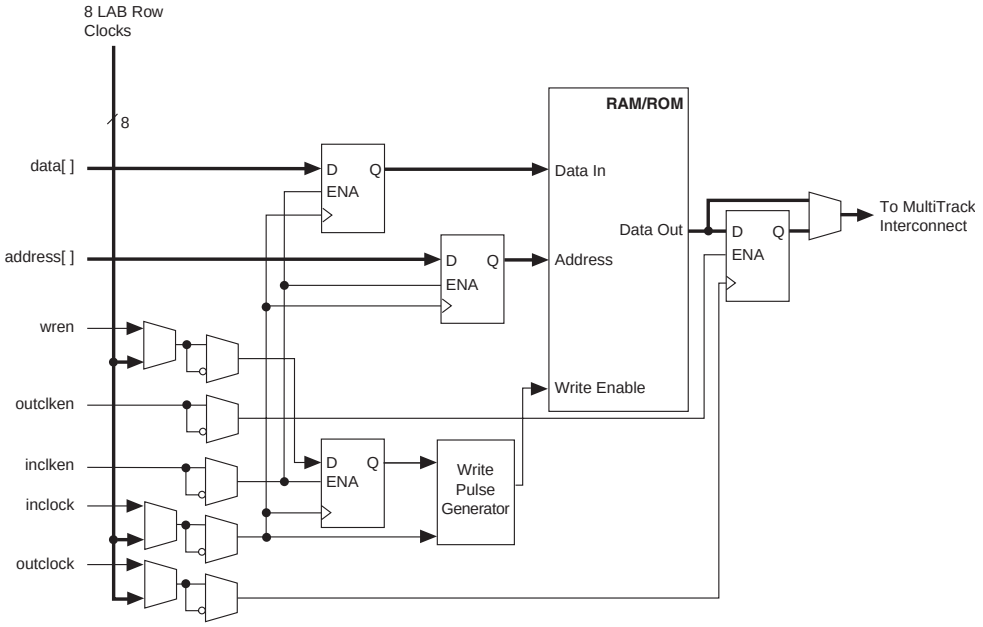

Digital Signal Processing Block

The most commonly used DSP functions are finite impulse response (FIR) filters, complex FIR filters, infinite impulse response (IIR) filters, fast Fourier transform (FFT) functions, direct cosine transform (DCT) functions, and correlators. All of these blocks have the same fundamental building block: the multiplier. Additionally, some applications need specialized operations such as multiply-add and multiply-accumulate operations. Stratix GX devices provide DSP blocks to meet the arithmetic requirements of these functions.

Each Stratix GX device has two columns of DSP blocks to efficiently implement DSP functions faster than LE-based implementations. Larger Stratix GX devices have more DSP blocks per column (see Table 4–12). Each DSP block can be configured to support up to:

- Eight 9 × 9-bit multipliers
- Four 18 × 18-bit multipliers
- One 36 × 36-bit multiplier

As indicated, the Stratix GX DSP block can support one 36 × 36-bit multiplier in a single DSP block. This is true for any matched sign multiplications (either unsigned by unsigned or signed by signed), but

EP1SGX25DF1020C7 Intel IC FPGA 607 I/O 1020FBGA

the capabilities for dynamic and mixed sign multiplications are handled differently. The following list provides the largest functions that can fit into a single DSP block.

- 36 × 36-bit unsigned by unsigned multiplication
- 36 × 36-bit signed by signed multiplication
- 35 × 36-bit unsigned by signed multiplication
- 36 × 35-bit signed by unsigned multiplication
- 36 × 35-bit signed by dynamic sign multiplication
- 35 × 36-bit dynamic sign by signed multiplication
- 35 × 36-bit unsigned by dynamic sign multiplication
- 36 × 35-bit dynamic sign by unsigned multiplication
- 35 × 35-bit dynamic sign multiplication when the sign controls for each operand are different
- 36 × 36-bit dynamic sign multiplication when the same sign control is used for both operands

This list only shows functions that can fit into a single DSP block. Multiple DSP blocks can support larger multiplication functions.

Figure 4–28 shows one of the columns with surrounding LAB rows.

Figure 4–28. DSP Blocks Arranged in Columns

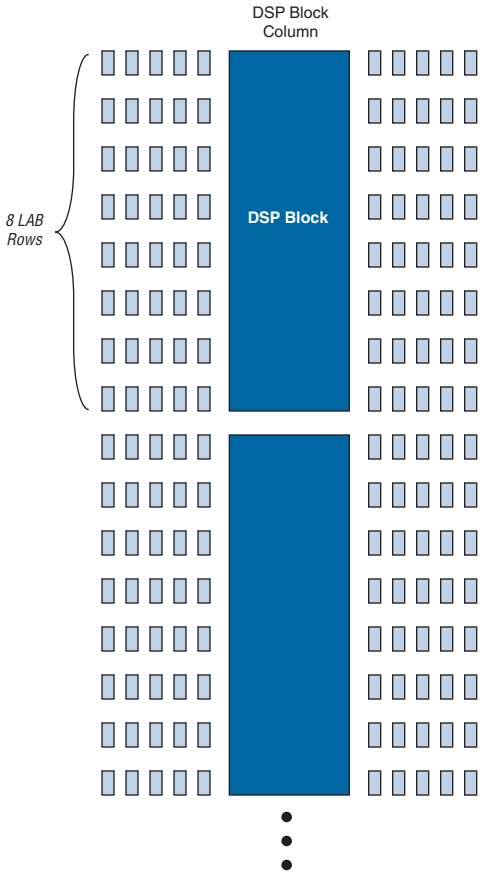

EP1SGX25DF1020C7 Intel IC FPGA 607 I/O 1020FBGA

Table 4–12 shows the number of DSP blocks in each Stratix GX device.

Table 4–12. DSP Blocks in Stratix GX Devices *Notes (1), (2)*

Device	DSP Blocks	Total 9 × 9 Multipliers	Total 18 × 18 Multipliers	Total 36 × 36 Multipliers
EP1SGX10	6	48	24	6
EP1SGX25	10	80	40	10
EP1SGX40	14	112	56	14

Notes to Table 4–12:

(1) Each device has either the number of 9 × 9-, 18 × 18-, or 36 × 36-bit multipliers shown. The total number of multipliers for each device is not the sum of all the multipliers.

(2) The number of supported multiply functions shown is based on signed/signed or unsigned/unsigned implementations.

DSP block multipliers can optionally feed an adder/subtractor or accumulator within the block depending on the configuration. This makes routing to LEs easier, saves LE routing resources, and increases performance, because all connections and blocks are within the DSP block. Additionally, the DSP block input registers can efficiently implement shift registers for FIR filter applications.

Figure 4–29 shows the top-level diagram of the DSP block configured for 18 × 18-bit multiplier mode. Figure 4–30 shows the 9 × 9-bit multiplier configuration of the DSP block.

Figure 4–29. DSP Block Diagram for 18 × 18-Bit Configuration

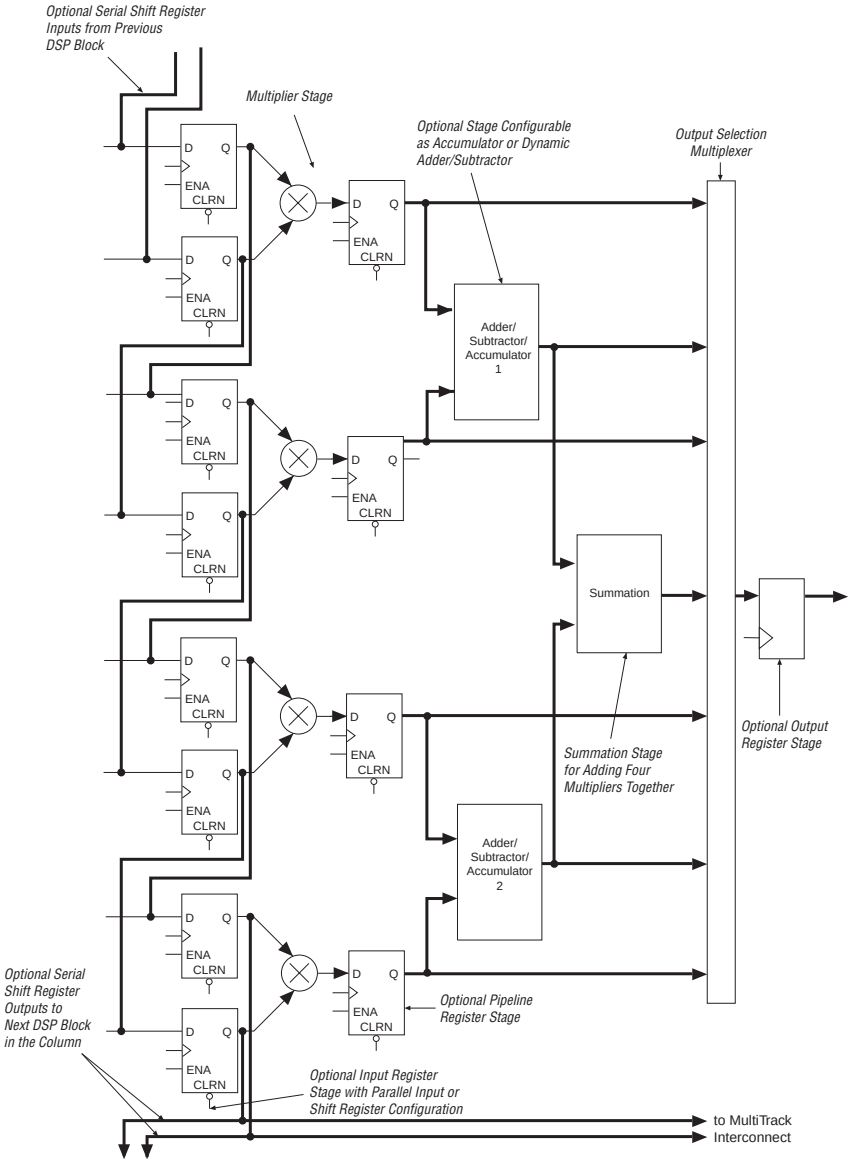

Figure 4–30. DSP Block Diagram for 9 × 9-Bit Configuration

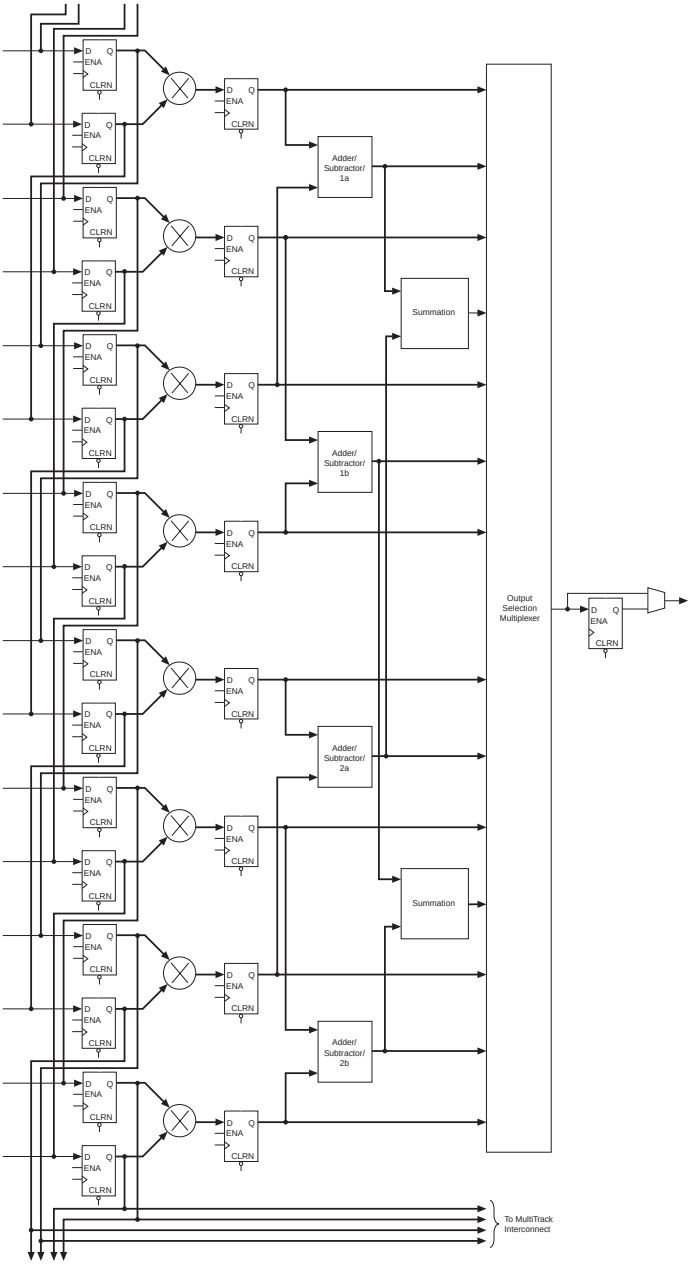

The DSP block consists of the following elements:

- Multiplier block
- Adder/output block

Multiplier Block

The DSP block multiplier block consists of the input registers, a multiplier, and pipeline register for pipelining multiply-accumulate and multiply-add/subtract functions as shown in Figure 4–31.

Figure 4–31. Multiplier Sub-Block Within Stratix GX DSP Block

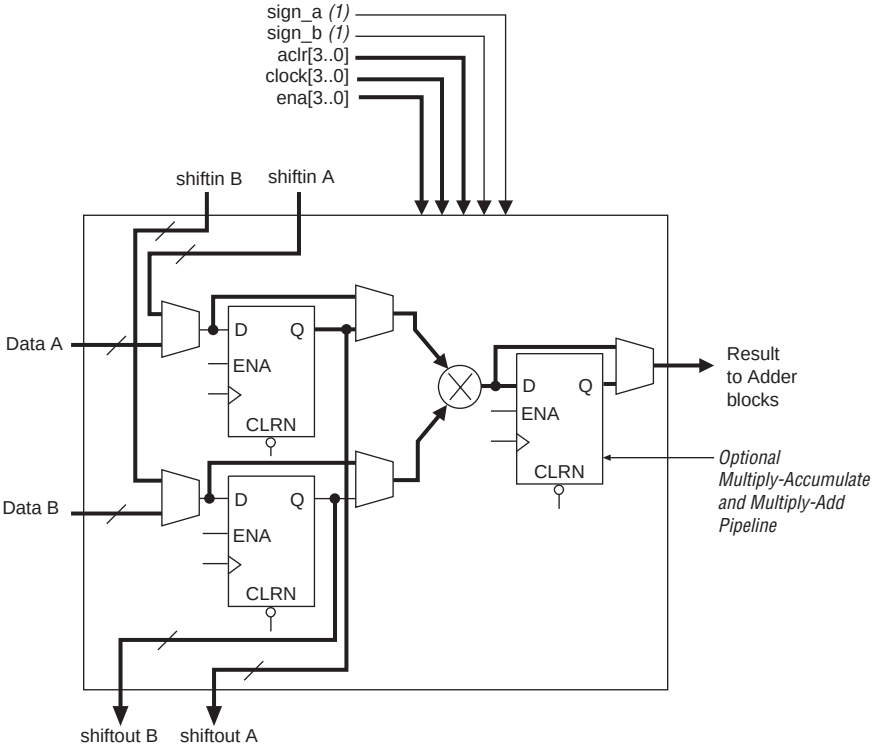

Note to Figure 4–31:
(1) These signals can be unregistered or registered once to match data path pipelines if required.

EP1SGX25DF1020C7 Intel IC FPGA 607 I/O 1020FBGA

Input Registers

A bank of optional input registers is located at the input of each multiplier and multiplicand inputs to the multiplier. When these registers are configured for parallel data inputs, they are driven by regular routing resources. You can use a clock signal, asynchronous clear signal, and a clock enable signal to independently control each set of A and B inputs for each multiplier in the DSP block. You select these control signals from a set of four different `clock[3..0]`, `aclr[3..0]`, and `ena[3..0]` signals that drive the entire DSP block.

You can also configure the input registers for a shift register application. In this case, the input registers feed the multiplier and drive two dedicated shift output lines: `shiftoutA` and `shiftoutB`. The shift outputs of one multiplier block directly feed the adjacent multiplier block in the same DSP block (or the next DSP block) as shown in Figure 4–32, to form a shift register chain. This chain can terminate in any block, that is, you can create any length of shift register chain up to 224 registers. You can use the input shift registers for FIR filter applications. One set of shift inputs can provide data for a filter, and the other are coefficients that are optionally loaded in serial or parallel. When implementing 9 × 9- and 18 × 18-bit multipliers, you do not need to implement external shift registers in LAB LEs. You implement all the filter circuitry within the DSP block and its routing resources, saving LE and general routing resources for general logic. External registers are needed for shift register inputs when using 36 × 36-bit multipliers.

Figure 4–32. Multiplier Sub-Blocks Using Input Shift Register Connections *Note (1)*

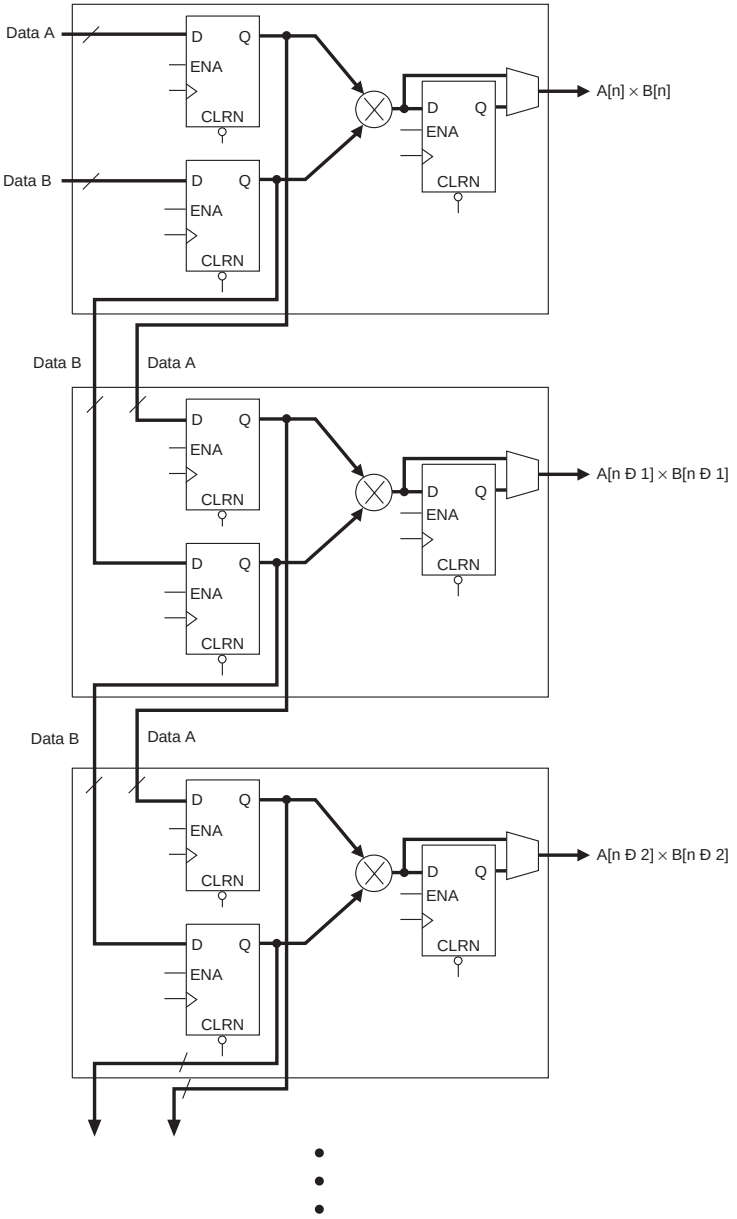

Note to Figure 4–32:

(1) Either Data A or Data B input can be set to a parallel input for constant coefficient multiplication.

EP1SGX25DF1020C7 Intel IC FPGA 607 I/O 1020FBGA

Table 4–13 shows the summary of input register modes for the DSP block.

Table 4–13. Input Register Modes

Register Input Mode	9 × 9	18 × 18	36 × 36
Parallel input	✓	✓	✓
Shift register input	✓	✓	

Multiplier

The multiplier supports 9 × 9-, 18 × 18-, or 36 × 36-bit multiplication. Each DSP block supports eight possible 9 × 9-bit or smaller multipliers. There are four multiplier blocks available for multipliers larger than 9 × 9 bits but smaller than 18 × 18 bits. There is one multiplier block available for multipliers larger than 18 × 18 bits but smaller than or equal to 36 × 36 bits. The ability to have several small multipliers is useful in applications such as video processing. Large multipliers greater than 18 × 18 bits are useful for applications such as the mantissa multiplication of a single-precision floating-point number.

The multiplier operands can be signed or unsigned numbers, where the result is signed if either input is signed as shown in Table 4–14. The `sign_a` and `sign_b` signals provide dynamic control of each operand's representation: a logic 1 indicates the operand is a signed number, a logic 0 indicates the operand is an unsigned number. These sign signals affect all multipliers and adders within a single DSP block and you can register them to match the data path pipeline. The multipliers are full precision (that is, 18 bits for the 18-bit multiply, 36-bits for the 36-bit multiply, and so on), regardless of whether `sign_a` or `sign_b` set the operands as signed or unsigned numbers.

Table 4–14. Multiplier Signed Representation

Data A	Data B	Result
Unsigned	Unsigned	Unsigned
Unsigned	Signed	Signed
Signed	Unsigned	Signed
Signed	Signed	Signed

EP1SGX25DF1020C7 Intel IC FPGA 607 I/O 1020FBGA

Pipeline/Post Multiply Register

The output of 9 × 9- or 18 × 18-bit multipliers can optionally feed a register to pipeline multiply-accumulate and multiply-add/subtract functions. For 36 × 36-bit multipliers, this register pipelines the multiplier function.

Adder/Output Blocks

The result of the multiplier sub-blocks are sent to the adder/output block which consist of an adder/subtractor/accumulator unit, summation unit, output select multiplexer, and output registers. The results are used to configure the adder/output block as a pure output, accumulator, a simple two-multiplier adder, four-multiplier adder, or final stage of the 36-bit multiplier. You can configure the adder/output block to use output registers in any mode, and must use output registers for the accumulator. The system cannot use adder/output blocks independently of the multiplier. Figure 4–33 shows the adder and output stages.

Figure 4–33. Adder/Output Blocks *Note (1)*

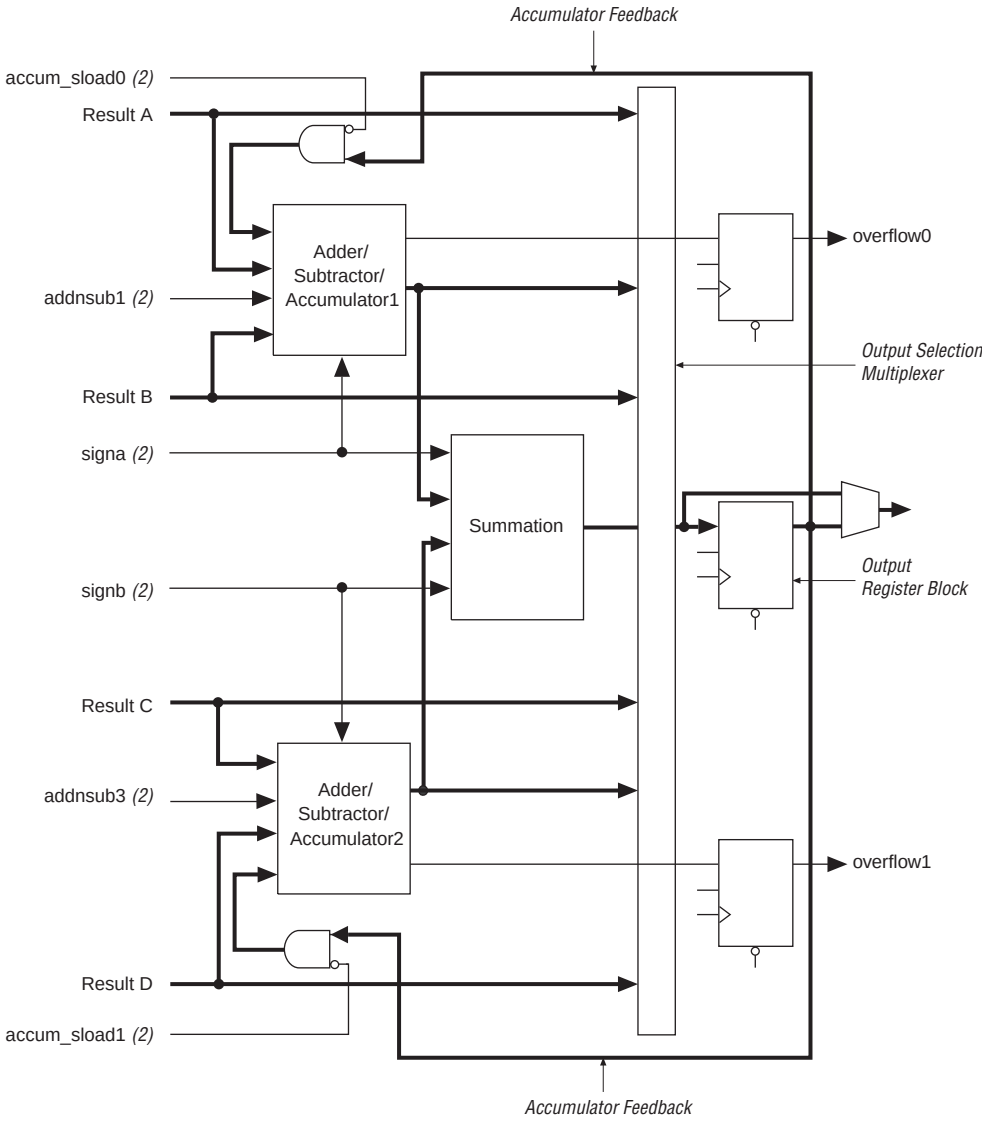

Notes to Figure 4–33:

(1) Adder/output block shown in Figure 4–33 is in 18 × 18-bit mode. In 9 × 9-bit mode, there are four adder/subtractor blocks and two summation blocks.

(2) These signals are either not registered, registered once, or registered twice to match the data path pipeline.

EP1SGX25DF1020C7 Intel IC FPGA 607 I/O 1020FBGA

Adder/Subtractor/Accumulator

The adder/subtractor/accumulator is the first level of the adder/output block and can be used as an accumulator or as an adder/subtractor.

Adder/Subtractor
Each adder/subtractor/accumulator block can perform addition or subtraction using the `addnsub` independent control signal for each first-level adder in 18 × 18-bit mode. There are two `addnsub[1..0]` signals available in a DSP block for any configuration. For 9 × 9-bit mode, one `addnsub[1..0]` signal controls the top two one-level adders and another `addnsub[1..0]` signal controls the bottom two one-level adders. A high `addnsub` signal indicates addition, and a low signal indicates subtraction. The `addnsub` control signal can be unregistered or registered once or twice when feeding the adder blocks to match data path pipelines.

The `signa` and `signb` signals serve the same function as the multiplier block `signa` and `signb` signals. The only difference is that these signals can be registered up to two times. These signals are tied to the same `signa` and `signb` signals from the multiplier and must be connected to the same clocks and control signals.

Accumulator
When configured for accumulation, the adder/output block output feeds back to the accumulator as shown in Figure 4–33. The `accum_sload[1..0]` signal synchronously loads the multiplier result to the accumulator output. This signal can be unregistered or registered once or twice. Additionally, the `overflow` signal indicates the accumulator has overflowed or underflowed in accumulation mode. This signal is always registered and must be externally latched in LEs if the design requires a latched `overflow` signal.

Summation

The output of the adder/subtractor/accumulator block feeds to an optional summation block. This block sums the outputs of the DSP block multipliers. In 9 × 9-bit mode, there are two summation blocks providing the sums of two sets of four 9 × 9-bit multipliers. In 18 × 18-bit mode, there is one summation providing the sum of one set of four 18 × 18-bit multipliers.

EP1SGX25DF1020C7 Intel IC FPGA 607 I/O 1020FBGA

Output Selection Multiplexer

The outputs from the various elements of the adder/output block are routed through an output selection multiplexer. Based on the DSP block operational mode and user settings, the multiplexer selects whether the output from the multiplier, the adder/subtractor/accumulator, or summation block feeds to the output.

Output Registers

Optional output registers for the DSP block outputs are controlled by four sets of control signals: `clock[3..0]`, `aclr[3..0]`, and `ena[3..0]`. Output registers can be used in any mode.

Modes of Operation

The adder, subtractor, and accumulate functions of a DSP block have four modes of operation:

- Simple multiplier
- Multiply-accumulator
- Two-multipliers adder
- Four-multipliers adder

Each DSP block can only support one mode. Mixed modes in the same DSP block is not supported.

Simple Multiplier Mode

In simple multiplier mode, the DSP block drives the multiplier sub-block result directly to the output with or without an output register. Up to four 18 × 18-bit multipliers or eight 9 × 9-bit multipliers can drive their results directly out of one DSP block. See Figure 4–34.

Figure 4–34. Simple Multiplier Mode

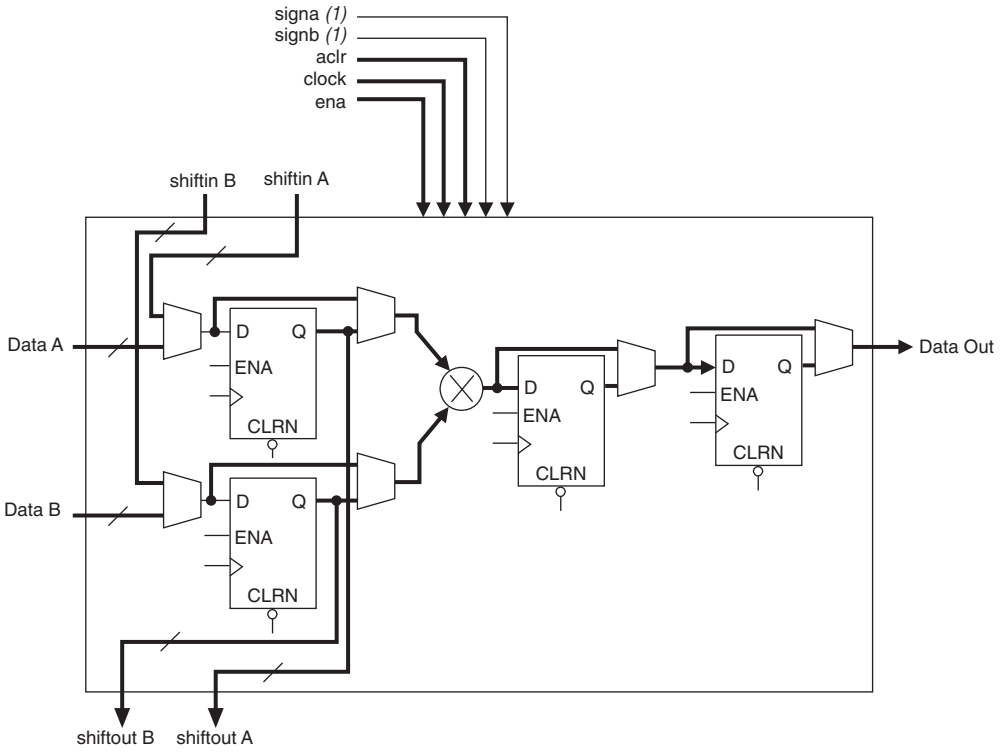

Note to Figure 4–34:
(1) These signals are not registered or registered once to match the data path pipeline.

DSP blocks can also implement one 36 × 36-bit multiplier in multiplier mode. DSP blocks use four 18 × 18-bit multipliers combined with dedicated adder and internal shift circuitry to achieve 36-bit multiplication. The input shift register feature is not available for the 36 × 36-bit multiplier. In 36 × 36-bit mode, the device can use the register that is normally a multiplier-result-output register as a pipeline stage for the 36 × 36-bit multiplier. Figure 4–35 shows the 36 × 36-bit multiply mode.

Figure 4–35. 36 × 36 Multiply Mode

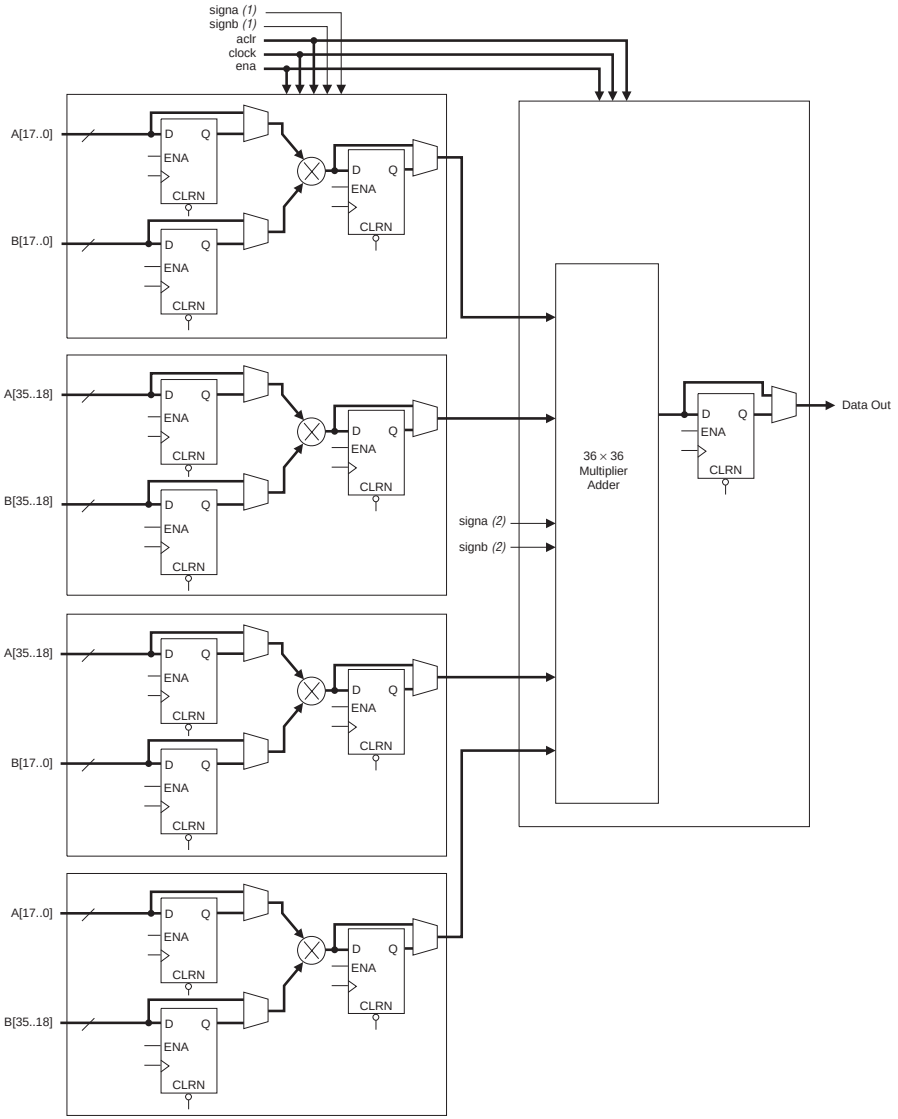

Notes to Figure 4–35:

(1) These signals are not registered or registered once to match the pipeline.

(2) These signals are not registered, registered once, or registered twice for latency to match the pipeline.

Multiply-Accumulator Mode

In multiply-accumulator mode (see Figure 4–36), the DSP block drives multiplied results to the adder/subtractor/accumulator block configured as an accumulator. You can implement one or two multiply-accumulators up to 18 × 18 bits in one DSP block. The first and third multiplier sub-blocks are unused in this mode, since only one multiplier can feed one of two accumulators. The multiply-accumulator output can be up to 52 bits—a maximum of a 36-bit result with 16 bits of accumulation. The `accum_sload` and `overflow` signals are only available in this mode. The `addnsub` signal can set the accumulator for decimation and the `overflow` signal indicates underflow condition.

Figure 4–36. Multiply-Accumulate Mode

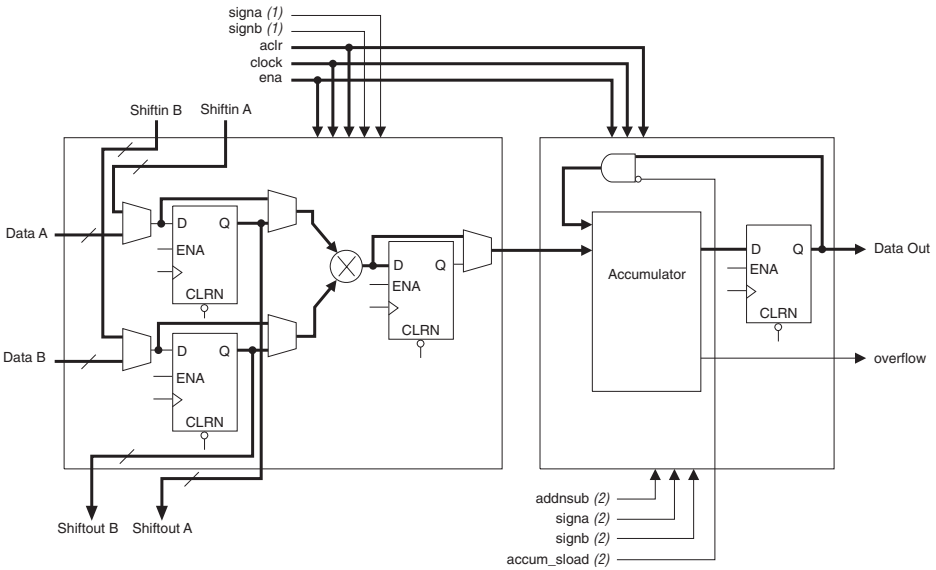

Notes to Figure 4–36:

(1) These signals are not registered or registered once to match the data path pipeline.

(2) These signals are not registered, registered once, or registered twice for latency to match the data path pipeline.

Two-Multipliers Adder Mode

The two-multipliers adder mode uses the adder/subtractor/accumulator block to add or subtract the outputs of the multiplier block, which is useful for applications such as FFT functions and complex FIR filters. A single DSP block can implement two sums or differences from two 18 × 18-bit multipliers each or four sums or differences from two 9 × 9-bit multipliers each.

You can use the two-multipliers adder mode for complex multiplications, which are written as:

$$(a + jb) \times (c + jd) = [(a \times c) - (b \times d)] + j \times [(a \times d) + (b \times c)]$$

The two-multipliers adder mode allows a single DSP block to calculate the real part $[(a \times c) - (b \times d)]$ using one subtractor and the imaginary part $[(a \times d) + (b \times c)]$ using one adder, for data widths up to 18 bits. Two complex multiplications are possible for data widths up to 9 bits using four adder/subtractor/accumulator blocks. Figure 4–37 shows an 18-bit two-multipliers adder.

Figure 4–37. Two-Multipliers Adder Mode Implementing Complex Multiply

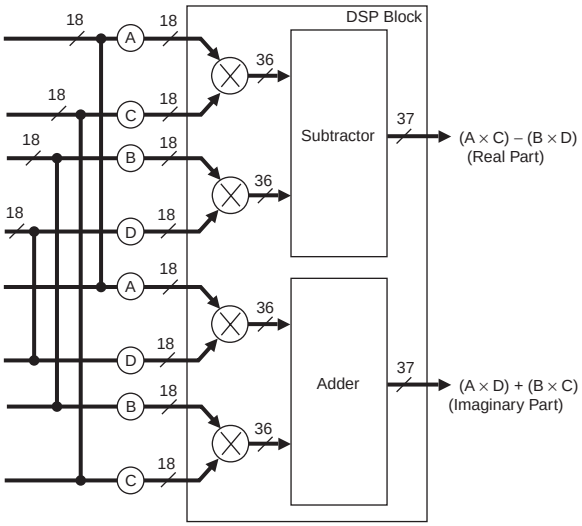

Four-Multipliers Adder Mode

In the four-multipliers adder mode, the DSP block adds the results of two first -stage adder/subtractor blocks. One sum of four 18 × 18-bit multipliers or two different sums of two sets of four 9 × 9-bit multipliers can be implemented in a single DSP block. The product width for each multiplier must be the same size. The four-multipliers adder mode is useful for FIR filter applications. Figure 4–38 shows the four multipliers adder mode.

Figure 4–38. Four-Multipliers Adder Mode

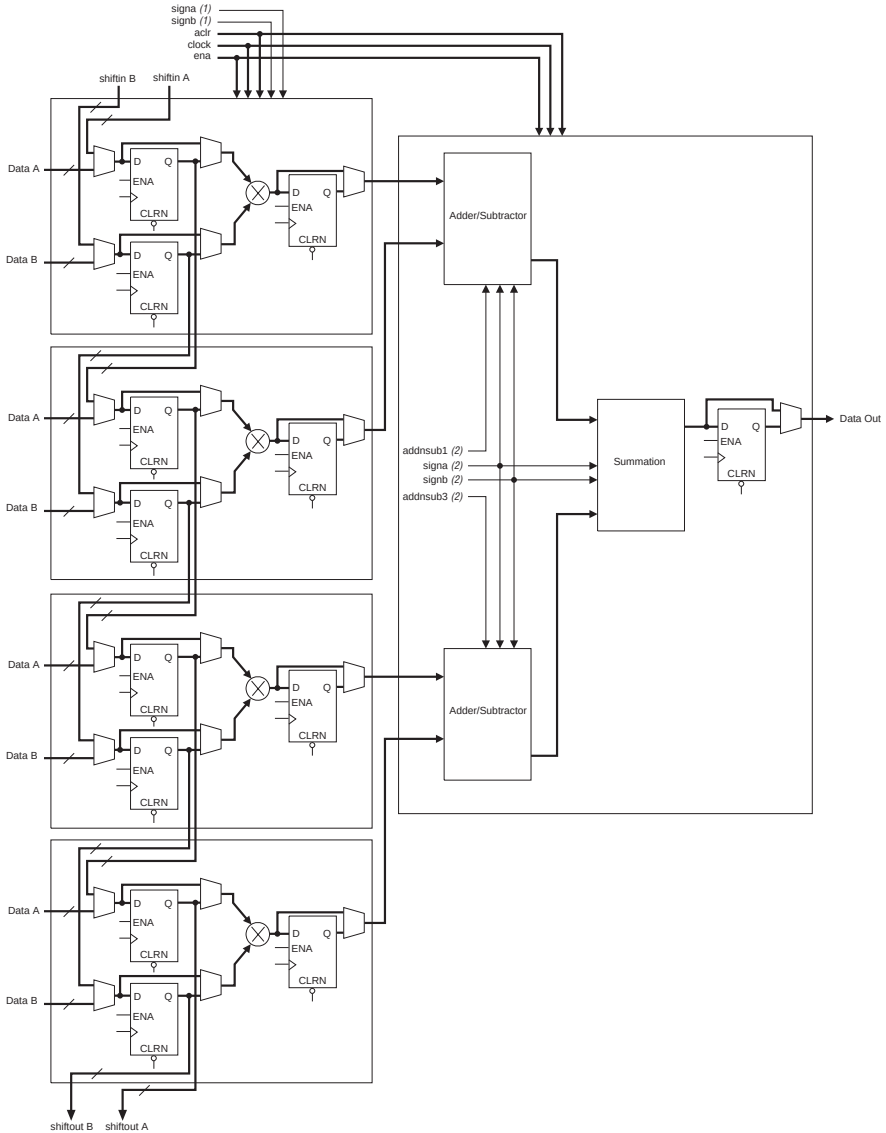

Notes to Figure 4–38:

(1) These signals are not registered or registered once to match the data path pipeline.

(2) These signals are not registered, registered once, or registered twice for latency to match the data path pipeline.

EP1SGX25DF1020C7 Intel IC FPGA 607 I/O 1020FBGA

For FIR filters, the DSP block combines the four-multipliers adder mode with the shift register inputs. One set of shift inputs contains the filter data, while the other holds the coefficients loaded in serial or parallel. The input shift register eliminates the need for shift registers external to the DSP block (that is, implemented in LEs). This architecture simplifies filter design since the DSP block implements all of the filter circuitry.

One DSP block can implement an entire 18-bit FIR filter with up to four taps. For FIR filters larger than four taps, DSP blocks can be cascaded with additional adder stages implemented in LEs.

Table 4–15 shows the different number of multipliers possible in each DSP block mode according to size. These modes allow the DSP blocks to implement numerous applications for DSP including FFTs, complex FIR, FIR, and 2D FIR filters, equalizers, IIR, correlators, matrix multiplication and many other functions.

Table 4–15. Multiplier Size & Configurations per DSP block

DSP Block Mode	9 × 9	18 × 18	36 × 36 *(1)*
Multiplier	Eight multipliers with eight product outputs	Four multipliers with four product outputs	One multiplier with one product output
Multiply-accumulator	Two multiply and accumulate (52 bits)	Two multiply and accumulate (52 bits)	–
Two-multipliers adder	Four sums of two multiplier products each	Two sums of two multiplier products each	–
Four-multipliers adder	Two sums of four multiplier products each	One sum of four multiplier products each	–

Note to Table 4–15:

(1) The number of supported multiply functions shown is based on signed/signed or unsigned/unsigned implementations.

DSP Block Interface

Stratix GX device DSP block outputs can cascade down within the same DSP block column. Dedicated connections between DSP blocks provide fast connections between the shift register inputs to cascade the shift register chains. You can cascade DSP blocks for 9 × 9- or 18 × 18-bit FIR filters larger than four taps, with additional adder stages implemented in LEs. If the DSP block is configured as 36 × 36 bits, the adder, subtractor, or accumulator stages are implemented in LEs. Each DSP block can route the shift register chain out of the block to cascade two full columns of DSP blocks.

The DSP block is divided into eight block units that interface with eight LAB rows on the left and right. Each block unit can be considered half of an 18 × 18-bit multiplier sub-block with 18 inputs and 18 outputs. A local interconnect region is associated with each DSP block. Like an LAB, this interconnect region can be fed with 10 direct link interconnects from the LAB to the left or right of the DSP block in the same row. All row and column routing resources can access the DSP block's local interconnect region. The outputs also work similarly to LAB outputs as well. Nine outputs from the DSP block can drive to the left LAB through direct link interconnects and nine can drive to the right LAB though direct link interconnects. All 18 outputs can drive to all types of row and column routing. Outputs can drive right- or left-column routing. Figures 4–39 and 4–40 show the DSP block interfaces to LAB rows.

Figure 4–39. DSP Block Interconnect Interface

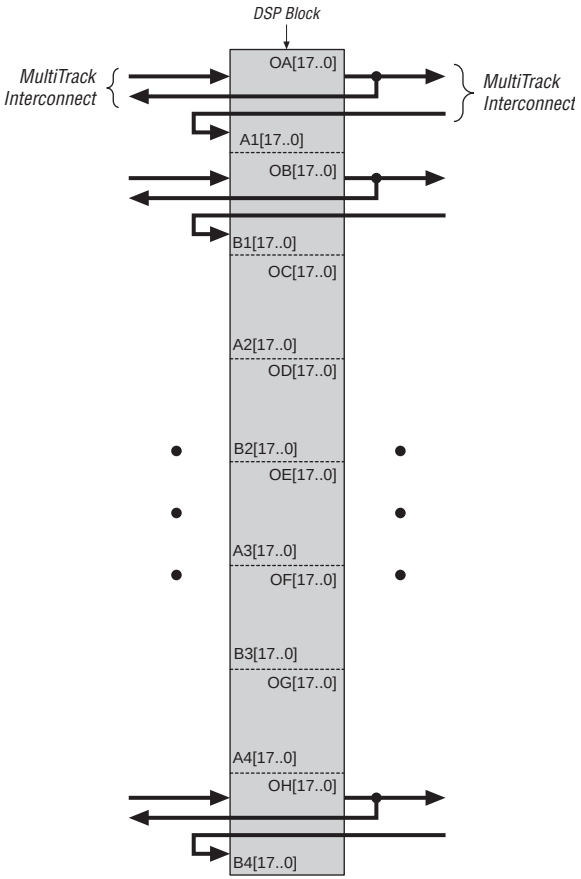

Figure 4–40. DSP Block Interface to Interconnect

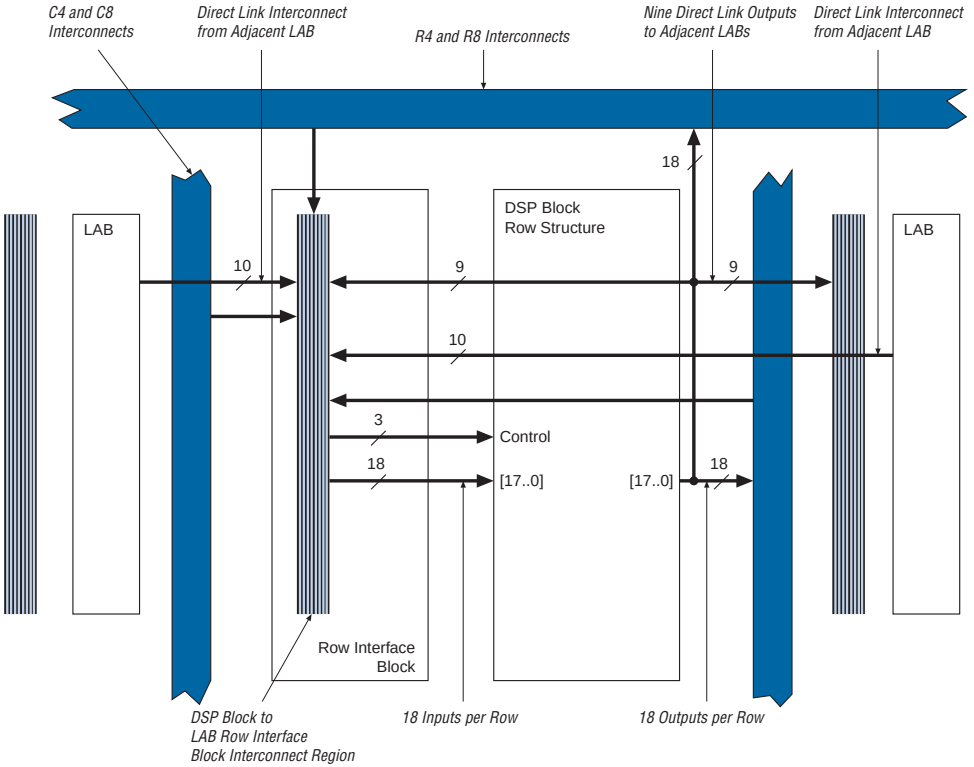

A bus of 18 control signals feeds the entire DSP block. These signals include `clock[0..3]` clocks, `aclr[0..3]` asynchronous clears, `ena[1..4]` clock enables, `signa`, `signb` signed/unsigned control signals, `addnsub1` and `addnsub3` addition and subtraction control signals, and `accum_sload[0..1]` accumulator synchronous loads. The

EP1SGX25DF1020C7 Intel IC FPGA 607 I/O 1020FBGA

clock signals are routed from LAB row clocks and are generated from specific LAB rows at the DSP block interface. The LAB row source for control signals, data inputs, and outputs is shown in Table 4–16.

Table 4–16. DSP Block Signal Sources & Destinations

LAB Row at Interface	Control Signals Generated	Data Inputs	Data Outputs
1	signa	A1[17..0]	OA[17..0]
2	aclr0 accum_sload0	B1[17..0]	OB[17..0]
3	addnsub1 clock0 ena0	A2[17..0]	OC[17..0]
4	aclr1 clock1 ena1	B2[17..0]	OD[17..0]
5	aclr2 clock2 ena2	A3[17..0]	OE[17..0]
6	sign_b clock3 ena3	B3[17..0]	OF[17..0]
7	clear3 accum_sload1	A4[17..0]	OG[17..0]
8	addnsub3	B4[17..0]	OH[17..0]

PLLs & Clock Networks

Stratix GX devices provide a hierarchical clock structure and multiple PLLs with advanced features. The large number of clocking resources in combination with the clock synthesis precision provided by enhanced and fast PLLs provides a complete clock management solution. Stratix GX devices contain up to four enhanced PLLs and up to four fast PLLs. In addition, there are four receiver PLLs and one transmitter PLL per transceiver block located on the right side of Stratix GX devices.

Global & Hierarchical Clocking

Stratix GX devices provide 16 dedicated global clock networks, 16 regional clock networks (four per device quadrant), 8 dedicated fast regional clock networks within EP1SGX10 and EP1SGX25, and 16 dedicated fast regional clock networks within EP1SGX40 devices.

EP1SGX25DF1020C7 Intel IC FPGA 607 I/O 1020FBGA

These clocks are organized into a hierarchical clock structure that allows for up to 22 clocks per device region with low skew and delay. This hierarchical clocking scheme provides up to 40 unique clock domains within EP1SGX10 and EP1SGX25 devices, and 48 unique clock domains within EP1SGX40 devices.

There are 12 dedicated clock pins (`CLK[15..12]`, and `CLK[7..0]`) to drive either the global or regional clock networks. Three clock pins drive the top, bottom, and left side of the device. Enhanced and fast PLL outputs as well as an I/O interface can also drive these global and regional clock networks.

There are up to 20 recovered clocks (`rxclkout[20..0]`) and up to 5 transmitter clock outputs (`coreclk_out`) which can drive any of the global clock networks (`CLK[15..0]`), as shown in Figure 4–41.

Global Clock Network

These clocks drive throughout the entire device, feeding all device quadrants. The global clock networks can be used as clock sources for all resources within the device IOEs, LEs, DSP blocks, and all memory blocks. These resources can also be used for control signals, such as clock enables and synchronous or asynchronous clears fed from the external pin. The global clock networks can also be driven by internal logic for internally generated global clocks and asynchronous clears, clock enables, or other control signals with large fanout. Figure 4–41 shows the 12 dedicated `CLK` pins and the transceiver clocks driving global clock networks.

Figure 4–41. Global Clock Resources

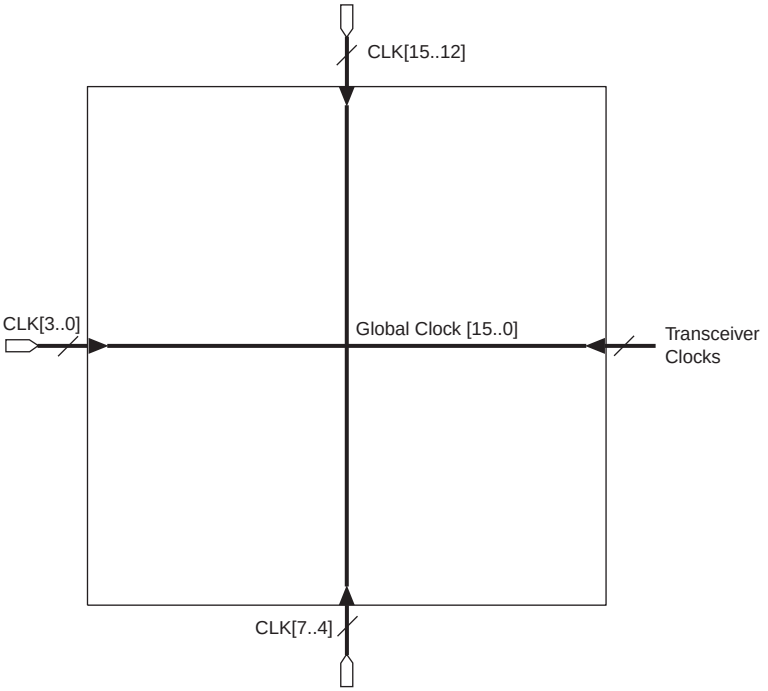

Regional Clock Network

There are four regional clock networks RCLK[3..0] within each quadrant of the Stratix GX device that are driven by the same dedicated CLK[7..0] and CLK[15..12] input pins, PLL outputs, or transceiver clocks. The regional clock networks only pertain to the quadrant they drive into. The regional clock networks provide the lowest clock delay and skew for logic contained within a single quadrant. The CLK clock pins symmetrically drive the RCLK networks within a particular quadrant, as shown in Figure 4–42.

Figure 4–42. Regional Clocks

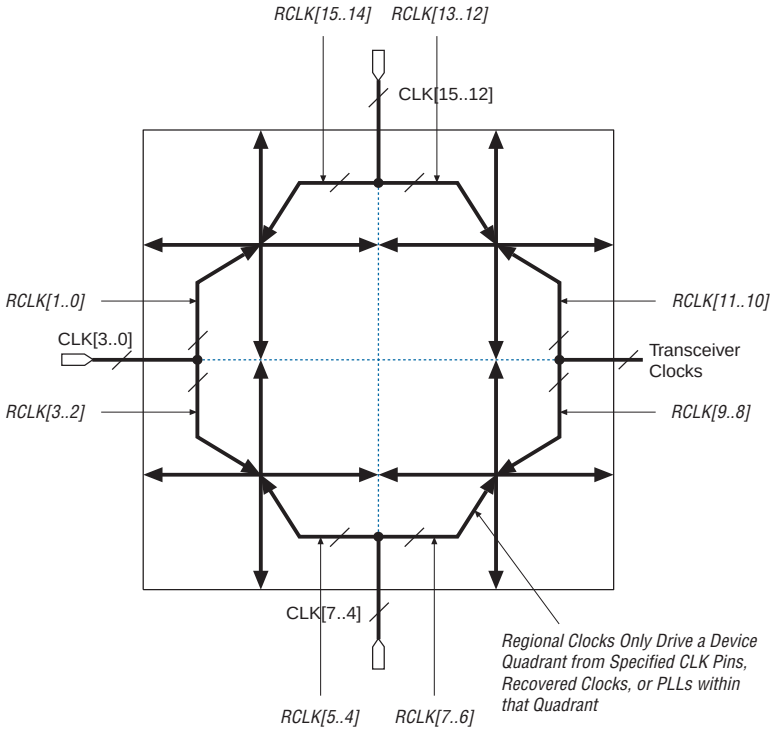

Fast Regional Clock Network

In EP1SGX25 and EP1SGX10 devices, there are two fast regional clock networks, FCLK[1..0], within each quadrant, fed by input pins (see Figure 4–43). In EP1SGX40 devices, there are two fast regional clock networks within each half-quadrant (see Figure 4–44). The FCLK[1..0] clocks can also be used for high fanout control signals, such as asynchronous clears, presets, clock enables, or protocol control signals such as TRDY and IRDY for PCI. Dual-purpose FCLK pins drive the fast clock networks. All devices have eight FCLK pins to drive fast regional clock networks. Any I/O pin can drive a clock or control signal onto any fast regional clock network with the addition of a delay. The I/O interconnect drives this signal.

EP1SGX25DF1020C7 Intel IC FPGA 607 I/O 1020FBGA

Figure 4–43. EP1SGX25 & EP1SGX10 Device Fast Clock Pin Connections to Fast Regional Clocks

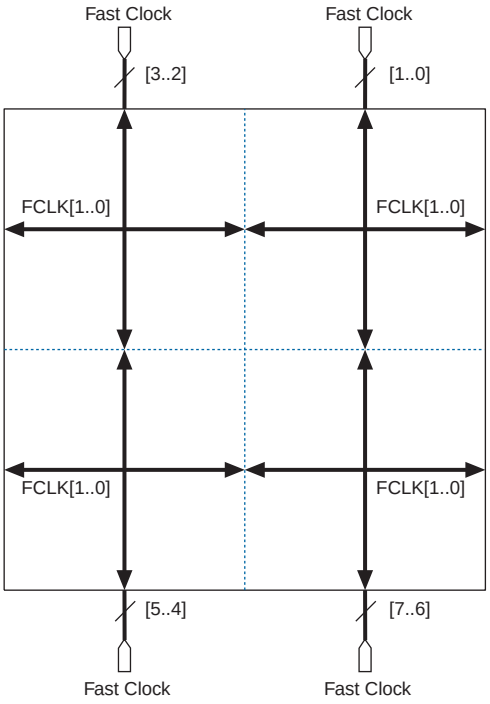

Figure 4–44. EP1SGX40 Device Fast Regional Clock Pin Connections to Fast Regional Clocks

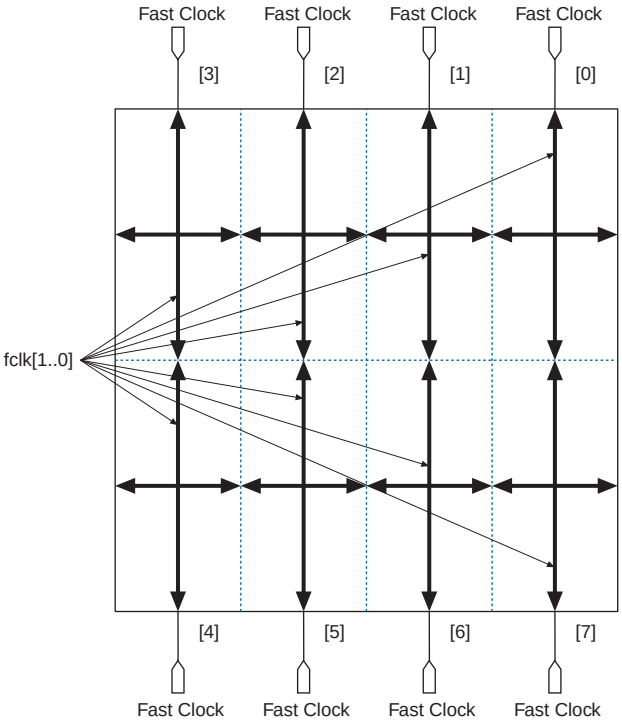

Combined Resources

Within each region, there are 22 distinct dedicated clocking resources consisting of 16 global clock lines, 4 regional clock lines, and 2 fast regional clock lines. Multiplexers are used with these clocks to form 8-bit busses to drive LAB row clocks, column IOE clocks, or row IOE clocks. Another multiplexer at the LAB level selects two of the eight row clocks to feed the LE registers within the LAB. See Figure 4–45.

EP1SGX25DF1020C7 Intel IC FPGA 607 I/O 1020FBGA

Figure 4–45. Regional Clock Bus

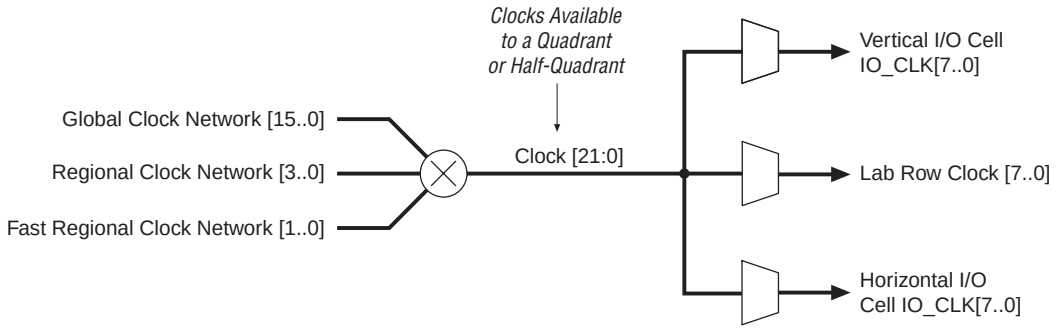

IOE clocks have horizontal and vertical block regions that are clocked by eight I/O clock signals chosen from the 22-quadrant or half-quadrant clock resources. Figures 4–46 and 4–47 show the quadrant and half-quadrant relationship to the I/O clock regions, respectively. The vertical regions (column pins) have less clock delay than the horizontal regions (row pins).

Figure 4–46. EP1SGX25 & EP1SGX10 Device I/O Clock Groups

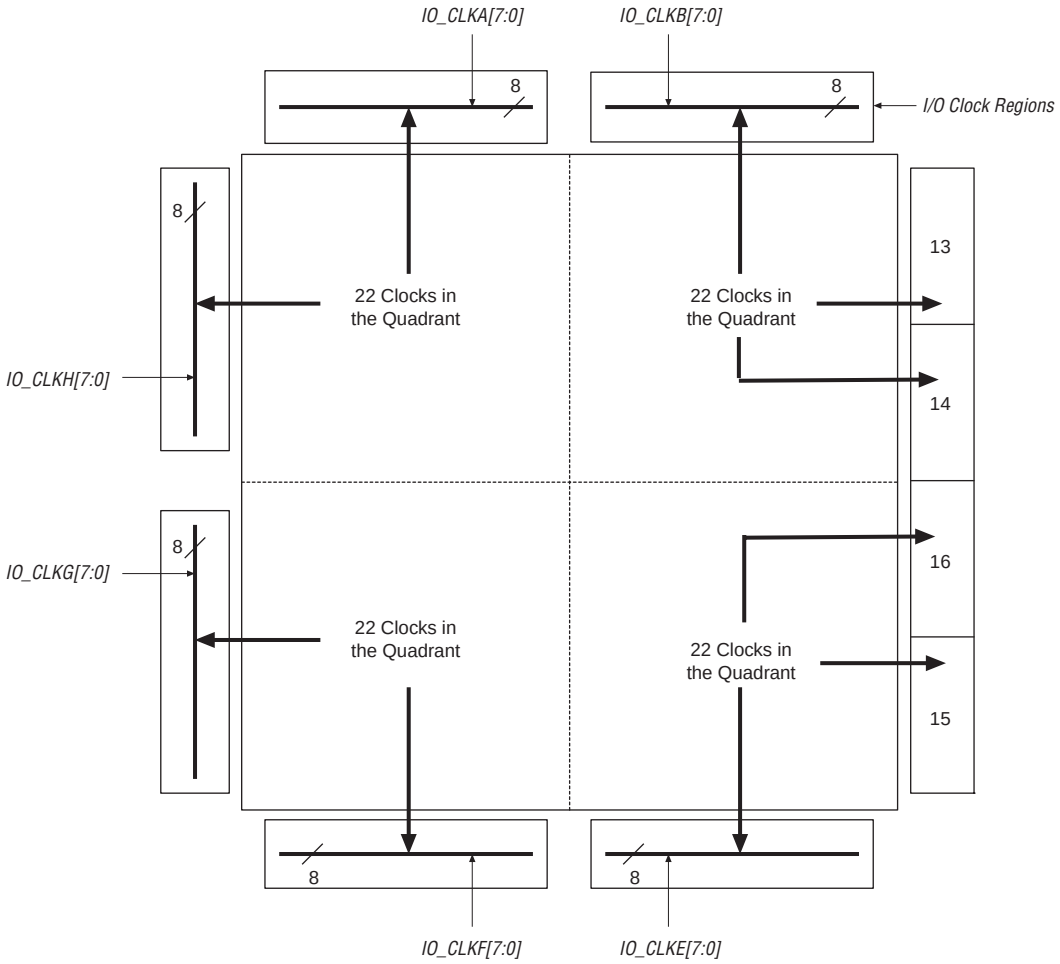

Figure 4–47. EP1SGX40 Device I/O Clock Groups

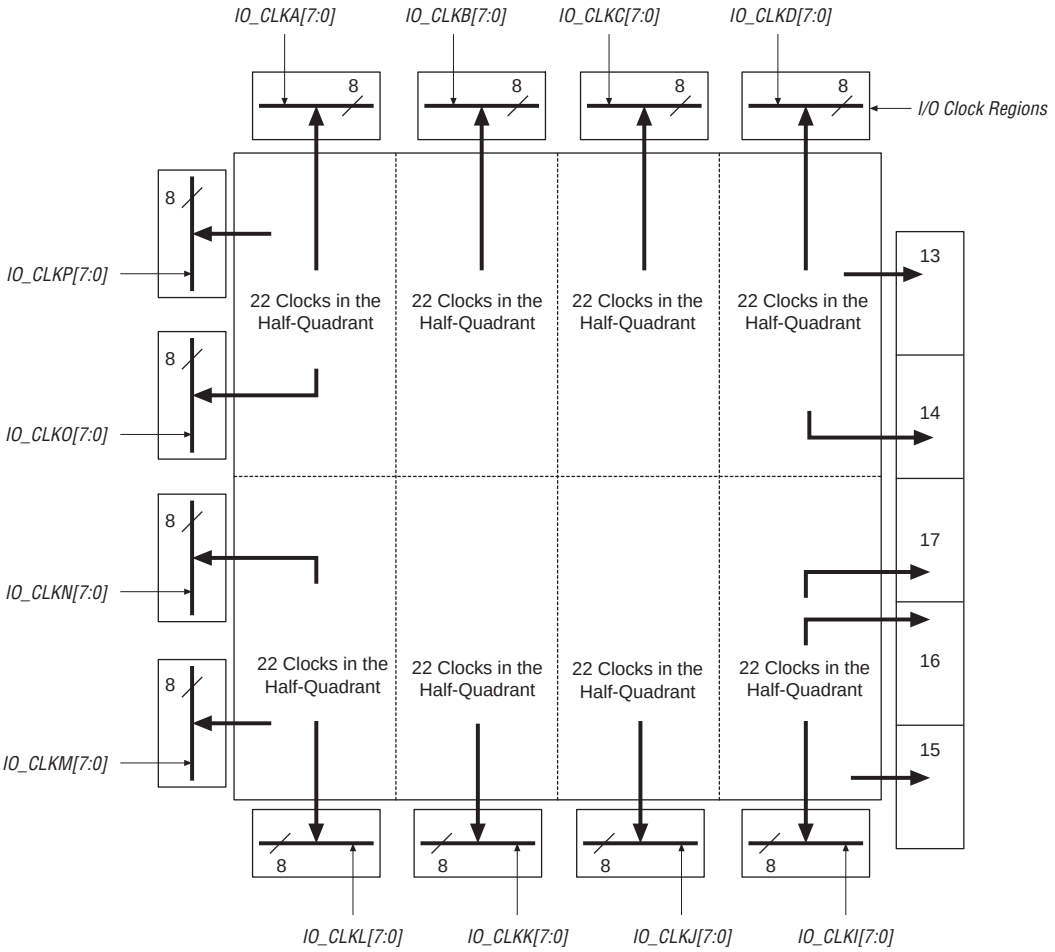

You can use the Quartus II software to control whether a clock input pin is either global, regional, or fast regional. The Quartus II software automatically selects the clocking resources if not specified.

Enhanced & Fast PLLs

Stratix GX devices provide robust clock management and synthesis using up to four enhanced PLLs and four fast PLLs. These PLLs increase performance and provide advanced clock interfacing and clock frequency synthesis. With features such as clock switchover, spread spectrum

EP1SGX25DF1020C7 Intel IC FPGA 607 I/O 1020FBGA

clocking, programmable bandwidth, phase and delay control, and dynamic PLL reconfiguration, the Stratix GX device's enhanced PLLs provide you with complete control of your clocks and system timing. The fast PLLs provide general purpose clocking with multiplication and phase shifting as well as high-speed outputs for high-speed differential I/O support. Enhanced and fast PLLs work together with the Stratix GX high-speed I/O and advanced clock architecture to provide significant improvements in system performance and bandwidth.

The Quartus II software enables the PLLs and their features without requiring any external devices. Table 4–17 shows which PLLs are available for each Stratix GX device and their type. Table 4–18 shows the enhanced PLL and fast PLL features in Stratix GX devices.

Table 4–17. Stratix GX Device PLL Availability

Device	Fast PLLs								Enhanced PLLs			
	1	2	3 *(1)*	4 *(1)*	7	8	9 *(1)*	10 *(1)*	5 *(2)*	6 *(2)*	11 *(3)*	12 *(3)*
EP1SGX10	✓	✓							✓	✓		
EP1SGX25	✓	✓							✓	✓		
EP1SGX40	✓	✓			✓	✓			✓	✓	✓	✓

Notes to Table 4–17:

(1) PLLs 3, 4, 9, and 10 are not available in Stratix GX devices. However, these PLLs are listed in Table 4–17 because the Stratix GX PLL numbering scheme is consistent with Stratix devices.

(2) PLLs 5 and 6 each have eight single-ended outputs or four differential outputs.

(3) PLLs 11 and 12 each have one single-ended output.

Table 4–18. Stratix GX Enhanced PLL & Fast PLL Features (Part 1 of 2) *Notes (1)–(8)*

Feature	Enhanced PLL	Fast PLL
Clock multiplication and division	*m*/ (*n* × post-scale counter) *(1)*	*m*/(post-scale counter) *(2)*
Phase shift	Down to 156.25-ps increments *(3)*, *(4)*	Down to 125-ps increments *(3)*, *(4)*
Delay shift	250-ps increments for ±3 ns	
Clock switchover	✓	
PLL reconfiguration	✓	
Programmable bandwidth	✓	
Spread spectrum clocking	✓	
Programmable duty cycle	✓	✓
Number of internal clock outputs	6	3 *(5)*

EP1SGX25DF1020C7 Intel IC FPGA 607 I/O 1020FBGA

Table 4–18. Stratix GX Enhanced PLL & Fast PLL Features (Part 2 of 2) *Notes (1)–(8)*		
Feature	**Enhanced PLL**	**Fast PLL**
Number of external clock outputs	Four differential/eight singled-ended or one single-ended *(6)*	*(7)*
Number of feedback clock inputs	4 *(8)*	

Notes to Table 4–18:

(1) The maximum count value is 1024, with a 50% duty cycle setting on the counter. The maximum count value for any other duty cycle setting is 512.
(2) For fast PLLs, *m* and post-scale counters range from 1 to 32.
(3) The smallest phase shift is determined by the VCO period divided by 8.
(4) For degree increments, Stratix GX devices can shift all output frequencies in increments of at least 45°. Smaller degree increments are possible depending on the frequency and divide parameters.
(5) PLLs 7 and 8 have two output ports per PLL. PLLs 1 and 2 have three output ports per PLL.
(6) Every Stratix GX device has two enhanced PLLs (PLLs 5 and 6) with eight single-ended or four differential outputs each. Two additional enhanced PLLs (PLLs 11 and 12) in EP1SGX40 devices each have one single-ended output.
(7) Fast PLLs can drive to any I/O pin as an external clock. For high-speed differential I/O pins, the device uses a data channel to generate `txclkout`.
(8) Every Stratix GX device has two enhanced PLLs with one single-ended or differential external feedback input per PLL.

Figure 4–48 shows a top-level diagram of the Stratix GX device and the PLL floorplan.

Figure 4–48. PLL Floorplan

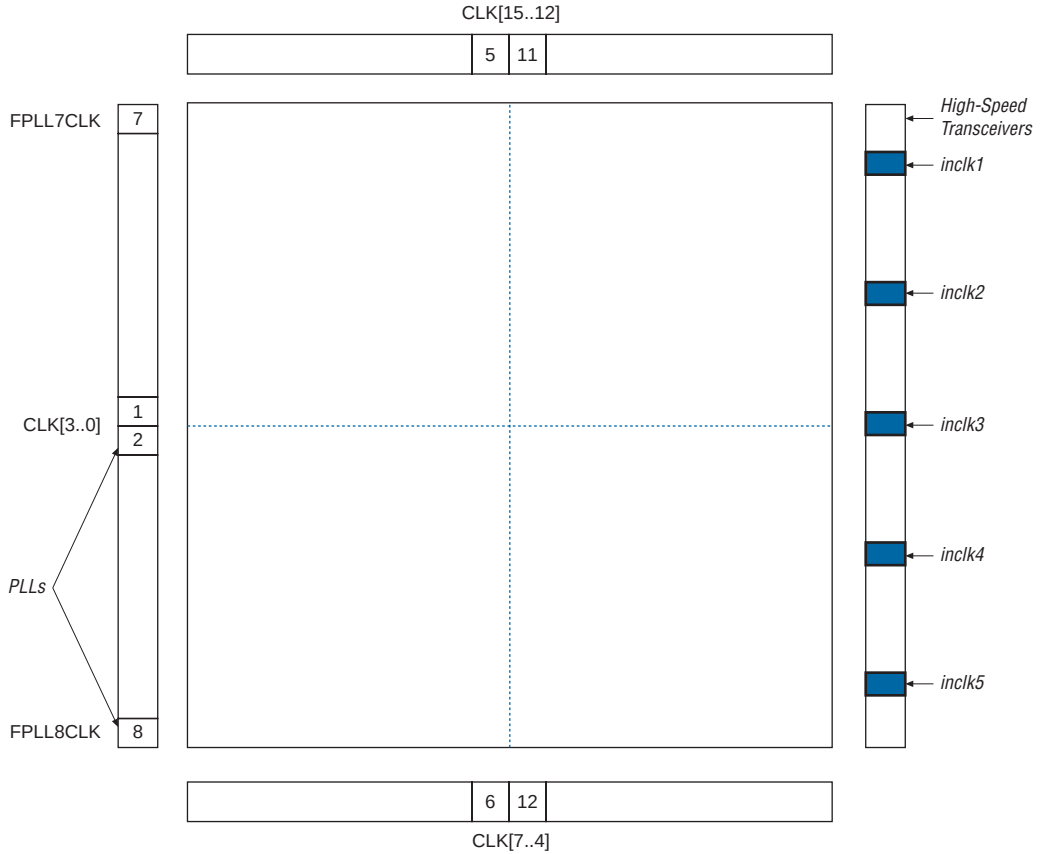

Figure 4–49 shows the global and regional clock connections from the PLL outputs and the CLK pins.

Figure 4–49. Global & Regional Clock Connections From Side Pins & Fast PLL Outputs *Note (1)*

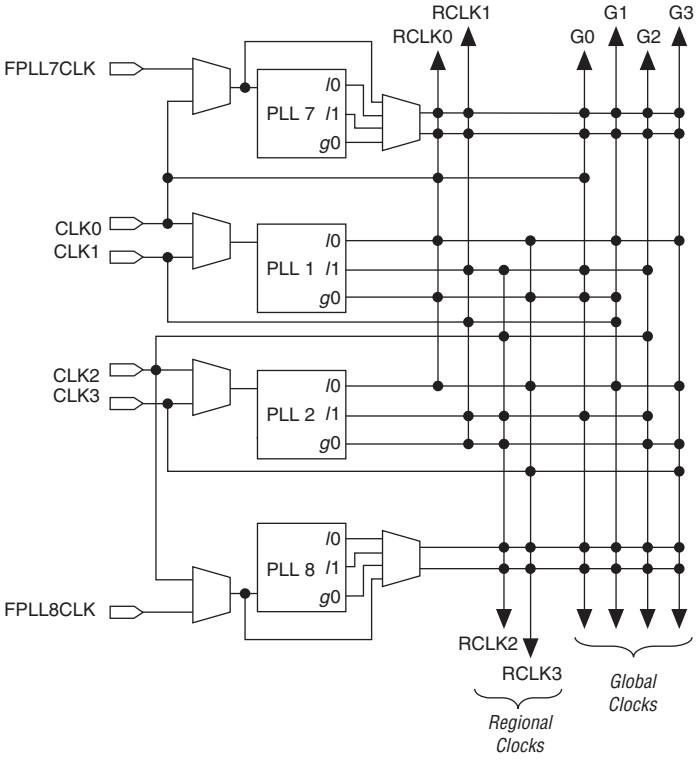

Note to Figure 4–49:
(1) PLLs 1,2 7, and 8 are fast PLLs. PLLs 7 and 8 do not drive global clocks.

Figure 4–50 shows the global and regional clocking from enhanced PLL outputs and top CLK pins.

Figure 4–50. Global & Regional Clock Connections From Top Clock Pins & Enhanced PLL Outputs *Note (1)*

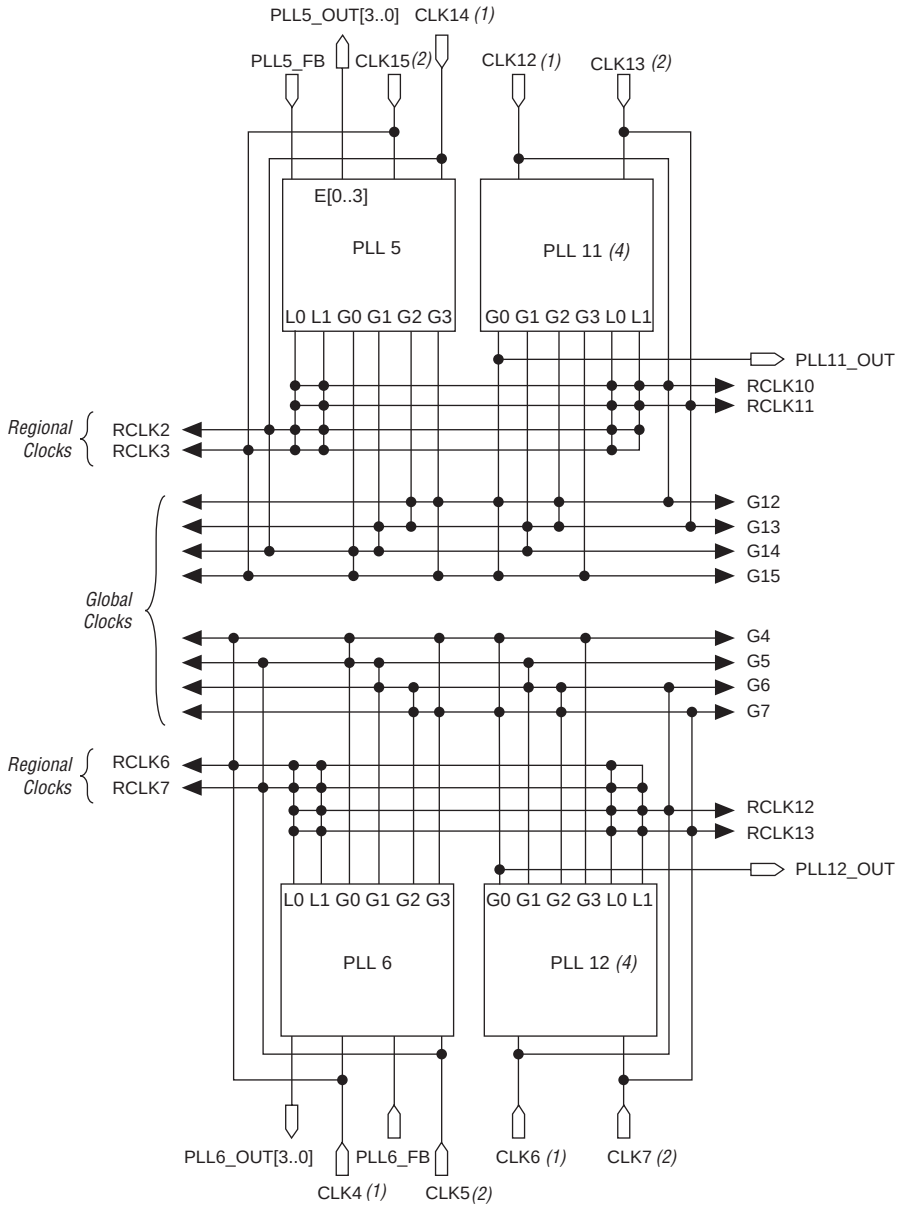

Note to Figure 4–50:

(1) PLLs 5, 6, 11, and 12 are enhanced PLLs.

Enhanced PLLs

Stratix GX devices contain up to four enhanced PLLs with advanced clock management features. Figure 4–51 shows a diagram of the enhanced PLL.

Figure 4–51. Stratix GX Enhanced PLL

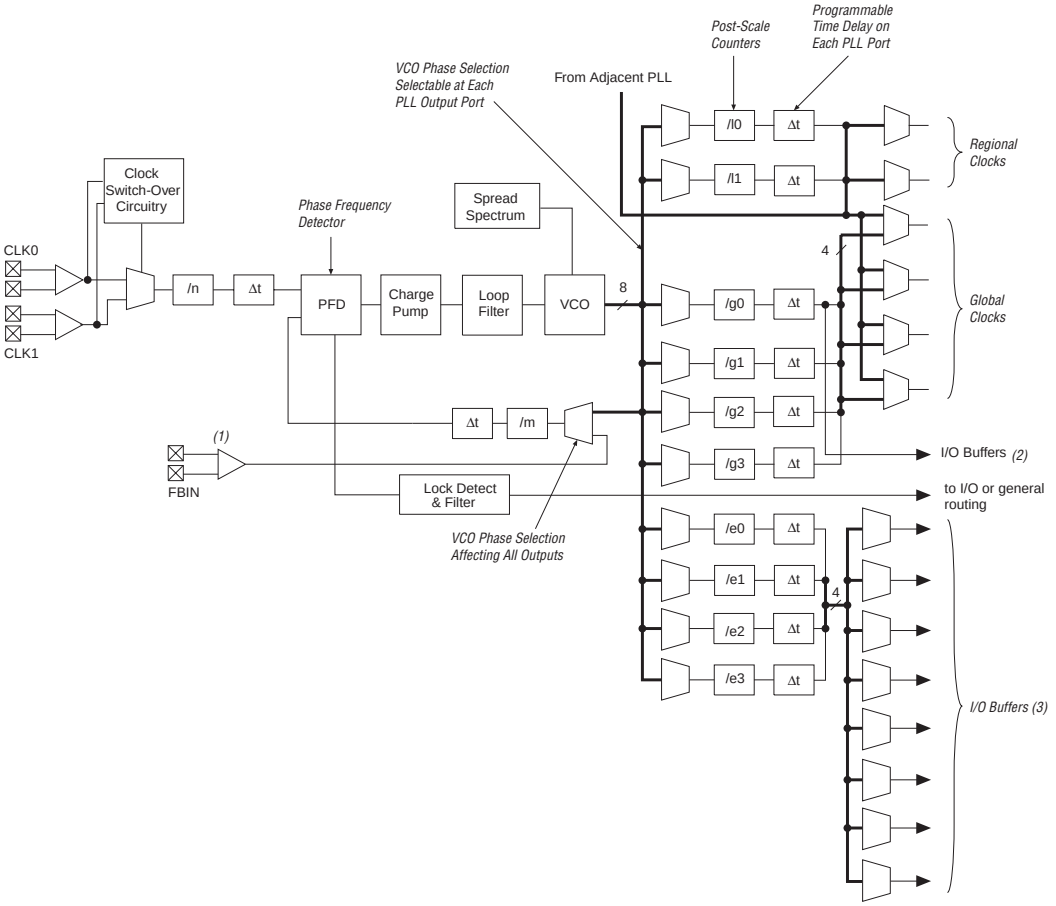

Notes to Figure 4–51:

(1) External feedback is available in PLLs 5 and 6.

(2) This external output is available from the *g*0 counter for PLLs 11 and 12.

(3) These counters and external outputs are available in PLLs 5 and 6.

EP1SGX25DF1020C7 Intel IC FPGA 607 I/O 1020FBGA

Clock Multiplication & Division

Each Stratix GX device enhanced PLL provides clock synthesis for PLL output ports using $m/(n \times$ post-scale counter) scaling factors. The input clock is divided by a pre-scale divider, n, and is then multiplied by the m feedback factor. The control loop drives the VCO to match $f_{IN} \times (m/n)$. Each output port has a unique post-scale counter that divides down the high-frequency VCO. For multiple PLL outputs with different frequencies, the VCO is set to the least common multiple of the output frequencies that meets its frequency specifications. Then, the post-scale dividers scale down the output frequency for each output port. For example, if output frequencies required from one PLL are 33 and 66 MHz, set the VCO to 330 MHz (the least common multiple in the VCO's range). There is one pre-scale divider, n, and one multiply divider, m, per PLL, with a range of 1 to 512 on each. There are two post-scale dividers (l) for regional clock output ports, four counters (g) for global clock output ports, and up to four counters (e) for external clock outputs, all ranging from 1 to 512. The Quartus II software automatically chooses the appropriate scaling factors according to the input frequency, multiplication, and division values entered.

Clock Switchover

To effectively develop high-reliability network systems, clocking schemes must support multiple clocks to provide redundancy. For this reason, Stratix GX device enhanced PLLs support a flexible clock switchover capability. Figure 4–52 shows a block diagram of the switchover circuit.The switchover circuit is configurable, so you can define how to implement it. Clock-sense circuitry automatically switches from the primary to secondary clock for PLL reference when the primary clock signal is not present.

EP1SGX25DF1020C7 Intel IC FPGA 607 I/O 1020FBGA

Figure 4–52. Clock Switchover Circuitry

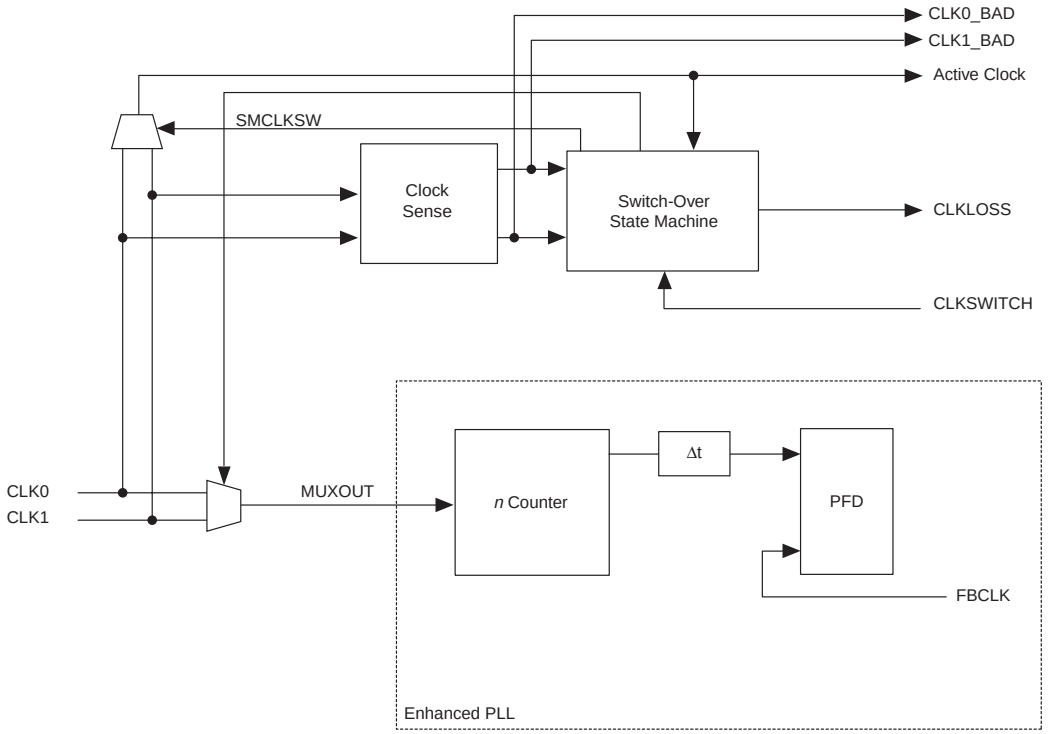

Note to Figure 4–52:
(1) PFD: phase frequency detector.

There are two possible ways to use the clock switchover feature.

- You can use automatic switchover circuitry for switching between inputs of the same frequency. For example, in applications that require a redundant clock with the same frequency as the primary clock, the switchover state machine generates a signal that controls the multiplexer select input on the bottom of Figure 4–52. In this case, the secondary clock becomes the reference clock for the PLL.
- You can use the `clkswitch` input for user- or system-controlled switch conditions. This is possible for same-frequency switchover or to switch between inputs of different frequencies. For example, if `inclk0` is 66 MHz and `inclk1` is 100 MHz, you must control the switchover because the automatic clock-sense circuitry cannot monitor primary and secondary clock frequencies with a frequency difference of more than ±20%. This feature is useful when clock sources can originate from multiple cards on the backplane,

EP1SGX25DF1020C7 Intel IC FPGA 607 I/O 1020FBGA

requiring a system-controlled switchover between frequencies of operation. You can use `clkswitch` together with the lock signal to trigger the switch from a clock that is running but becomes unstable and cannot be locked onto.

During switchover, the PLL VCO continues to run and either slows down or speeds up, generating frequency drift on the PLL outputs. The clock switchover transitions without any glitches. After the switch, there is a finite resynchronization period to lock onto new clock as the VCO ramps up. The exact amount of time it takes for the PLL to relock relates to the PLL configuration and may be adjusted by using the programmable bandwidth feature of the PLL. The preliminary specification for the maximum time to relock is 100 µs.

For more information on clock switchover, see *AN313: Implementing Clock Switchover in Stratix & Stratix GX Devices*.

PLL Reconfiguration

The PLL reconfiguration feature enables system logic to change Stratix GX device enhanced PLL counters and delay elements without reloading a Programmer Object File (**.pof**). This provides considerable flexibility for frequency synthesis, allowing real-time PLL frequency and output clock delay variation. You can sweep the PLL output frequencies and clock delay in prototype environments. The PLL reconfiguration feature can also dynamically or intelligently control system clock speeds or t_{CO} delays in end systems.

Clock delay elements at each PLL output port implement variable delay. Figure 4–53 shows a diagram of the overall dynamic PLL control feature for the counters and the clock delay elements. The configuration time is less than 20 µs for the enhanced PLL using a input shift clock rate of 25 MHz. The charge pump, loop filter components, and phase shifting using VCO phase taps cannot be dynamically adjusted.

Figure 4–53. Dynamically Programmable Counters & Delays in Stratix GX Device Enhanced PLLs

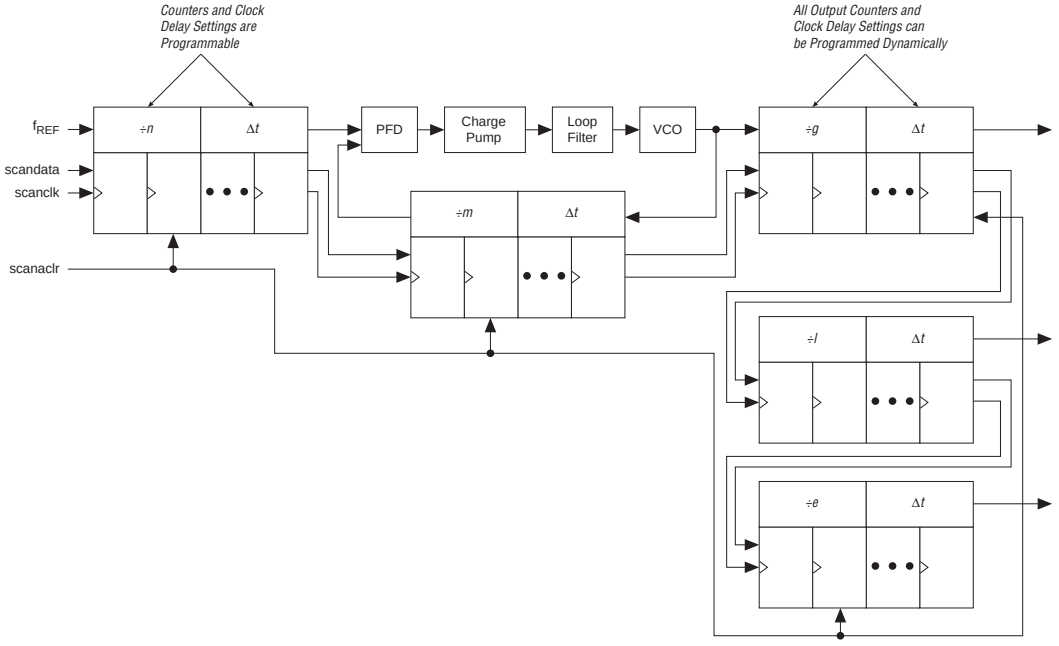

PLL reconfiguration data is shifted into serial registers from the logic array or external devices. The PLL input shift data uses a reference input shift clock. Once the last bit of the serial chain is clocked in, the register chain is synchronously loaded into the PLL configuration bits. The shift circuitry also provides an asynchronous clear for the serial registers.

Programmable Bandwidth

You have advanced control of the PLL bandwidth using the programmable control of the PLL loop characteristics, including loop filter and charge pump. The PLL's bandwidth is a measure of its ability to track the input clock and jitter. A high-bandwidth PLL can quickly lock onto a reference clock and react to any changes in the clock. It also allows a wide band of input jitter spectrum to pass to the output. A low-bandwidth PLL takes longer to lock, but it attenuates all high-frequency jitter components. The Quartus II software can adjust PLL characteristics to achieve the desired bandwidth. The programmable bandwidth is tuned by varying the charge pump current, loop filter resistor value, high frequency capacitor value, and *m* counter value. You can manually adjust these values if desired. Bandwidth is programmable from 150 kHz to 2 MHz.

External Clock Outputs

Enhanced PLLs 5 and 6 each support up to eight single-ended clock outputs (or four differential pairs). See Figure 4–54.

Figure 4–54. External Clock Outputs for PLLs 5 & 6

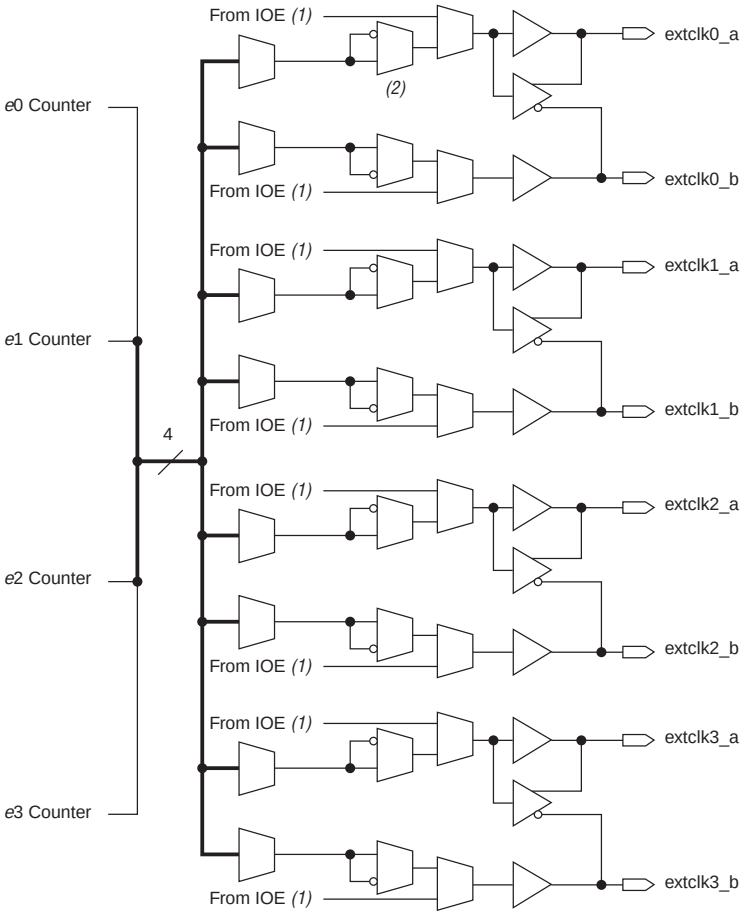

Notes to Figure 4–54:

(1) Each external clock output pin can be used as a general purpose output pin from the logic array. These pins are multiplexed with IOE outputs.

(2) Two single-ended outputs are possible per output counter—either two outputs of the same frequency and phase or one shifted 180°.

Any of the four external output counters can drive the single-ended or differential clock outputs for PLLs 5 and 6. This means one counter or frequency can drive all output pins available from PLL 5 or PLL 6. Each

EP1SGX25DF1020C7 Intel IC FPGA 607 I/O 1020FBGA

pair of output pins (four pins total) has dedicated VCC and GND pins to reduce the output clock's overall jitter by providing improved isolation from switching I/O pins.

For PLLs 5 and 6, each pin of a single-ended output pair can either be in phase or 180° out of phase. The clock output pin pairs support the same I/O standards as standard output pins (in the top and bottom banks) as well as LVDS, LVPECL, 3.3-V PCML, HyperTransport technology, differential HSTL, and differential SSTL. Table 4–19 shows which I/O standards the enhanced PLL clock pins support. When in single-ended or differential mode, the two outputs operate off the same power supply. Both outputs use the same standards in single-ended mode to maintain performance. You can also use the external clock output pins as user output pins if external enhanced PLL clocking is not needed.

Table 4–19. I/O Standards Supported for Enhanced PLL Pins (Part 1 of 2)

I/O Standard	Input			Output
	INCLK	FBIN	PLLENABLE	EXTCLK
LVTTL	✓	✓	✓	✓
LVCMOS	✓	✓	✓	✓
2.5 V	✓	✓		✓
1.8 V	✓	✓		✓
1.5 V	✓	✓		✓
3.3-V PCI	✓	✓		✓
3.3-V PCI-X	✓	✓		✓
LVPECL	✓	✓		✓
3.3-V PCML	✓	✓		✓
LVDS	✓	✓		✓
HyperTransport technology	✓	✓		✓
Differential HSTL	✓			✓
Differential SSTL				✓
3.3-V GTL	✓	✓		✓
3.3-V GTL+	✓	✓		✓
1.5-V HSTL class I	✓	✓		✓
1.5-V HSTL class II	✓	✓		✓
SSTL-18 class I	✓	✓		✓
SSTL-18 class II	✓	✓		✓
SSTL-2 class I	✓	✓		✓
SSTL-2 class II	✓	✓		✓

EP1SGX25DF1020C7 Intel IC FPGA 607 I/O 1020FBGA

Table 4–19. I/O Standards Supported for Enhanced PLL Pins (Part 2 of 2)

I/O Standard	Input			Output
	INCLK	FBIN	PLLENABLE	EXTCLK
SSTL-3 class I	✓	✓		✓
SSTL-3 class II	✓	✓		✓
AGP (1× and 2×)	✓	✓		✓
CTT	✓	✓		✓

Enhanced PLLs 11 and 12 support one single-ended output each (see Figure 4–55). These outputs do not have their own VCC and GND signals. Therefore, to minimize jitter, do not place switching I/O pins next to this output pin.

Figure 4–55. External Clock Outputs for Enhanced PLLs 11 & 12

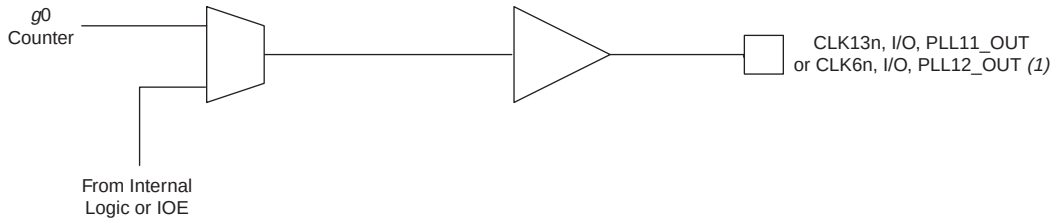

Note to Figure 4–55:
(1) For PLL 11, this pin is CLK13n; for PLL 12 this pin is CLK7n.

Stratix GX devices can drive any enhanced PLL driven through the global clock or regional clock network to any general I/O pin as an external output clock. The jitter on the output clock is not guaranteed for these cases.

Clock Feedback

The following four feedback modes in Stratix GX device enhanced PLLs allow multiplication and/or phase and delay shifting:

- Zero delay buffer: The external clock output pin is phase-aligned with the clock input pin for zero delay.
- External feedback: The external feedback input pin, FBIN, is phase-aligned with the clock input, CLK, pin. Aligning these clocks allows you to remove clock delay and skew between devices. This mode is only possible for PLLs 5 and 6. PLLs 5 and 6 each support

EP1SGX25DF1020C7 Intel IC FPGA 607 I/O 1020FBGA

feedback for one of the dedicated external outputs, either one single-ended or one differential pair. In this mode, one *e* counter feeds back to the PLL `FBIN` input, becoming part of the feedback loop.

- Normal mode: If an internal clock is used in this mode, it is phase-aligned to the input clock pin. The external clock output pin has a phase delay relative to the clock input pin if connected in this mode. You define which internal clock output from the PLL should be phase-aligned to the internal clock pin.
- No compensation: In this mode, the PLL does not compensate for any clock networks or external clock outputs.

Phase & Delay Shifting

Stratix GX device enhanced PLLs provide advanced programmable phase and clock delay shifting. For phase shifting, you can specify a phase shift (in degrees or time units) for each PLL clock output port or for all outputs together in one shift. Phase-shifting values in time units are allowed with a resolution range of 160 to 420 ps. This resolution is a function of frequency input and the multiplication and division factors. In other words, it is a function of the VCO period equal to one-eighth of the VCO period. Each clock output counter can choose a different phase of the VCO period from up to eight taps. You can use this clock output counter along with an initial setting on the post-scale counter to achieve a phase-shift range for the entire period of the output clock. The phase tap feedback to the *m* counter can shift all outputs to a single phase or delay. The Quartus II software automatically sets the phase taps and counter settings according to the phase shift entered.

In addition to the phase-shift feature, the fine tune clock delay shift feature provides advanced time delay shift control on each of the four PLL outputs. Each PLL output shifts in 250-ps increments for a range of –3.0 ns to +3.0 ns between any two outputs using discrete delay elements. Total delay shift between any two PLL outputs must be less than 3 ns. For example, shifts on outputs of –1 and +2 ns is allowed, but not –1 and +2.5 ns. There is some delay variation due to process, voltage, and temperature. Only the clock delay shift blocks can be controlled during system operation for dynamic clock delay control.

Spread-Spectrum Clocking

The Stratix GX device's enhanced PLLs use spread-spectrum technology to reduce electromagnetic interference generation from a system by distributing the energy over a broader frequency range. The enhanced

EP1SGX25DF1020C7 Intel IC FPGA 607 I/O 1020FBGA

PLL typically provides 0.5% down spread modulation using a triangular profile. The modulation frequency is programmable. Enabling spread spectrum for a PLL affects all of its outputs.

Lock Detect

The lock output indicates that there is a stable clock output signal in phase with the reference clock. Without any additional circuitry, the lock signal may toggle as the PLL begins tracking the reference clock. You may need to gate the lock signal for use as a system control. The lock signal from the locked port can drive the logic array or an output pin.

Whenever the PLL loses lock for any reason (be it excessive inclk jitter, clock switchover, PLL reconfiguration, power supply noise etc.), the PLL must be reset with the `areset` signal for correct phase shift operation. If the phase relationship between the input clock versus output clock, and between different output clocks from the PLL is not important in the design, then the PLL need not be reset.

See the *Stratix GX FPGA Errata Sheet* for more information on implementing the gated lock signal in the design.

Programmable Duty Cycle

The programmable duty cycle allows enhanced PLLs to generate clock outputs with a variable duty cycle. This feature is supported on each enhanced PLL post-scale counter (*g*0..*g*3, *l*0..*l*3, *e*0..*e*3). The duty cycle setting is achieved by a low and high time count setting for the post-scale dividers. The Quartus II software uses the frequency input and the required multiply or divide rate to determine the duty cycle choices.

Advanced Clear & Enable Control

There are several control signals for clearing and enabling PLLs and their outputs. You can use these signals to control PLL resynchronization and gate PLL output clocks for low-power applications.

The `pllenable` pin is a dedicated pin that enables/disables PLLs. When the `pllenable` pin is low, the clock output ports are driven by `GND` and all the PLLs go out of lock. When the `pllenable` pin goes high again, the PLLs relock and resynchronize to the input clocks. You can choose which PLLs are controlled by the `pllenable` signal by connecting the `pllenable` input port of the `altpll` megafunction to the common `pllenable` input pin.

EP1SGX25DF1020C7 Intel IC FPGA 607 I/O 1020FBGA

The areset signals are reset/resynchronization inputs for each PLL. The areset signal should be asserted every time the PLL loses lock to guarantee correct phase relationship between the PLL output clocks. Users should include the areset signal in designs if any of the following conditions are true:

- PLL Reconfiguration or Clock switchover enables in the design.
- Phase relationships between output clocks need to be maintained after a loss of lock condition

The device input pins or logic elements (LEs) can drive these input signals. When driven high, the PLL counters resets, clearing the PLL output and placing the PLL out of lock. The VCO sets back to its nominal setting (~700 MHz). When driven low again, the PLL resynchronizes to its input as it relocks. If the target VCO frequency is below this nominal frequency, then the output frequency starts at a higher value than desired as the PLL locks. If the system cannot tolerate this, the clkena signal can disable the output clocks until the PLL locks.

The pfdena signals control the phase frequency detector (PFD) output with a programmable gate. If you disable the PFD, the VCO operates at its last set value of control voltage and frequency with some long-term drift to a lower frequency. The system continues running when the PLL goes out of lock or the input clock is disabled. By maintaining the last locked frequency, the system has time to store its current settings before shutting down. You can either use your own control signal or a clkloss status signal to trigger pfdena.

The clkena signals control the enhanced PLL regional and global outputs. Each regional and global output port has its own clkena signal. The clkena signals synchronously disable or enable the clock at the PLL output port by gating the outputs of the *g* and *l* counters. The clkena signals are registered on the falling edge of the counter output clock to enable or disable the clock without glitches. Figure 4–56 shows the waveform example for a PLL clock port enable. The PLL can remain locked independent of the clkena signals since the loop-related counters are not affected. This feature is useful for applications that require a low power or sleep mode. Upon re-enabling, the PLL does not need a resynchronization or relock period. The clkena signal can also disable clock outputs if the system is not tolerant to frequency overshoot during resynchronization.

The extclkena signals work in the same way as the clkena signals, but they control the external clock output counters (*e*0, *e*1, *e*2, and *e*3). Upon re-enabling, the PLL does not need a resynchronization or relock period

EP1SGX25DF1020C7 Intel IC FPGA 607 I/O 1020FBGA

unless the PLL is using external feedback mode. In order to lock in external feedback mode, the external output must drive the board trace back to the FBIN pin.

Figure 4–56. extclkena Signals

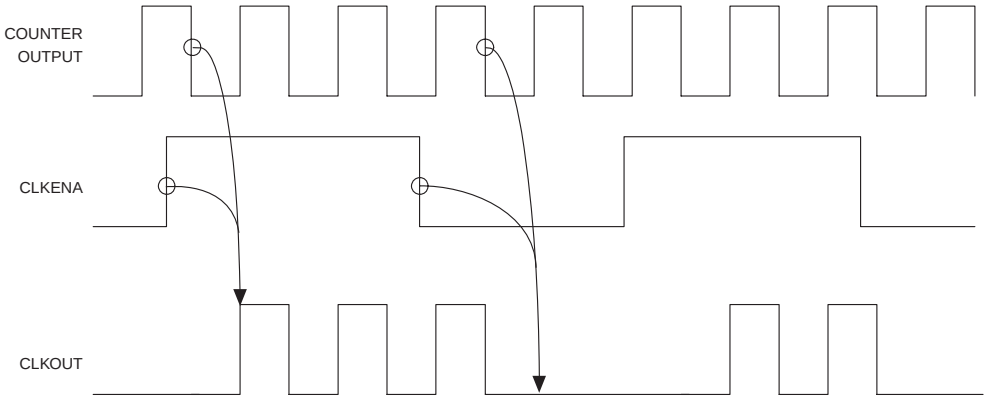

Fast PLLs

Stratix GX devices contain up to four fast PLLs with high-speed serial interfacing ability, along with general-purpose features. Figure 4–57 shows a diagram of the fast PLL.

Figure 4–57. Stratix GX Device Fast PLL

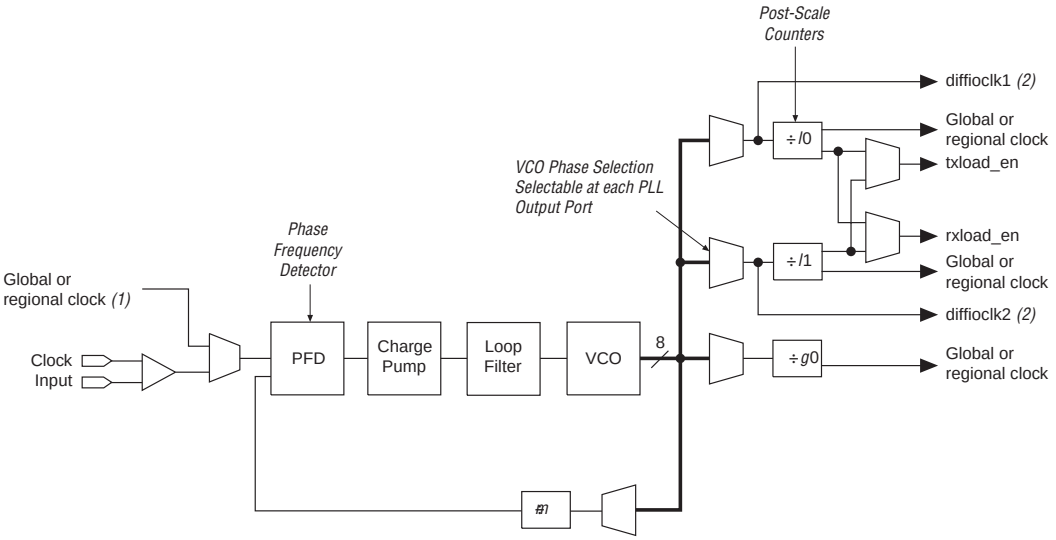

Notes to Figure 4–57:

(1) In high-speed differential I/O support mode, this high-speed PLL clock feeds the SERDES. Stratix GX devices only support one rate of data transfer per fast PLL in high-speed differential I/O support mode.

(2) This signal is a high-speed differential I/O support SERDES control signal.

Clock Multiplication & Division

The Stratix GX device's fast PLLs provide clock synthesis for PLL output ports using *m*/(post scaler) scaling factors. The input clock is multiplied by the *m* feedback factor. Each output port has a unique post scale counter to divide down the high-frequency VCO. There is one multiply divider, *m*, per fast PLL with a range of 1 to 32. There are two post scale L dividers for regional and/or LVDS interface clocks, and *g*0 counter for global clock output port; all range from 1 to 32.

In the case of a high-speed differential interface, you can set the output counter to 1 to allow the high-speed VCO frequency to drive the SERDES.

External Clock Outputs

Each fast PLL supports differential or single-ended outputs for source-synchronous transmitters or for general-purpose external clocks. There are no dedicated external clock output pins. Any I/O pin can be driven by the fast PLL global or regional outputs as an external output

EP1SGX25DF1020C7 Intel IC FPGA 607 I/O 1020FBGA

pin. The I/O standards supported by any particular bank determines what standards are possible for an external clock output driven by the fast PLL in that bank.

Table 4–20 shows the I/O standards supported by fast PLL input pins.

Table 4–20. Fast PLL Port Input Pin I/O Standards

I/O Standard	Input	
	INCLK	PLLENABLE
LVTTL	✓	✓
LVCMOS	✓	✓
2.5 V	✓	
1.8 V	✓	
1.5 V	✓	
3.3-V PCI		
3.3-V PCI-X		
LVPECL	✓	
3.3-V PCML	✓	
LVDS	✓	
HyperTransport technology	✓	
Differential HSTL	✓	
Differential SSTL		
3.3-V GTL	✓	
3.3-V GTL+	✓	
1.5V HSTL class I	✓	
1.5V HSTL class II	✓	
SSTL-18 class I	✓	
SSTL-18 class II	✓	
SSTL-2 class I	✓	
SSTL-2 class II	✓	
SSTL-3 class I	✓	
SSTL-3 class II	✓	
AGP (1× and 2×)	✓	
CTT	✓	

EP1SGX25DF1020C7 Intel IC FPGA 607 I/O 1020FBGA

Phase Shifting

Stratix GX device fast PLLs have advanced clock shift capability that enables programmable phase shifts. You can enter a phase shift (in degrees or time units) for each PLL clock output port or for all outputs together in one shift. You can perform phase shifting in time units with a resolution range of 150 to 400 ps. This resolution is a function of the VCO period.

Control Signals

The fast PLL has the same `lock` output, `pllenable` input, and `areset` input control signals as the enhanced PLL.

For more information on high-speed differential I/O support, see the *High-Speed Source-Synchronous Differential I/O Interfaces in Stratix GX Devices* chapter of the *Stratix GX Device Handbook, Volume 2*.

I/O Structure

IOEs provide many features, including:

- Dedicated differential and single-ended I/O buffers
- 3.3-V, 64-bit, 66-MHz PCI compliance
- 3.3-V, 64-bit, 133-MHz PCI-X 1.0 compliance
- Joint Test Action Group (JTAG) boundary-scan test (BST) support
- Differential on-chip termination for LVDS I/O standard
- Programmable pull-up during configuration
- Output drive strength control
- Slew-rate control
- Tri-state buffers
- Bus-hold circuitry
- Programmable pull-up resistors
- Programmable input and output delays
- Open-drain outputs
- DQ and DQS I/O pins
- Double-data rate (DDR) Registers

The IOE in Stratix GX devices contains a bidirectional I/O buffer, six registers, and a latch for a complete embedded bidirectional single data rate or DDR transfer. Figure 4–58 shows the Stratix GX IOE structure. The IOE contains two input registers (plus a latch), two output registers, and two output enable registers. The design can use both input registers and the latch to capture DDR input and both output registers to drive DDR outputs. Additionally, the design can use the output enable (OE) register for fast clock-to-output enable timing. The negative edge-clocked OE register is used for DDR SDRAM interfacing. The Quartus II software automatically duplicates a single OE register that controls multiple output or bidirectional pins.

Figure 4–58. Stratix GX IOE Structure

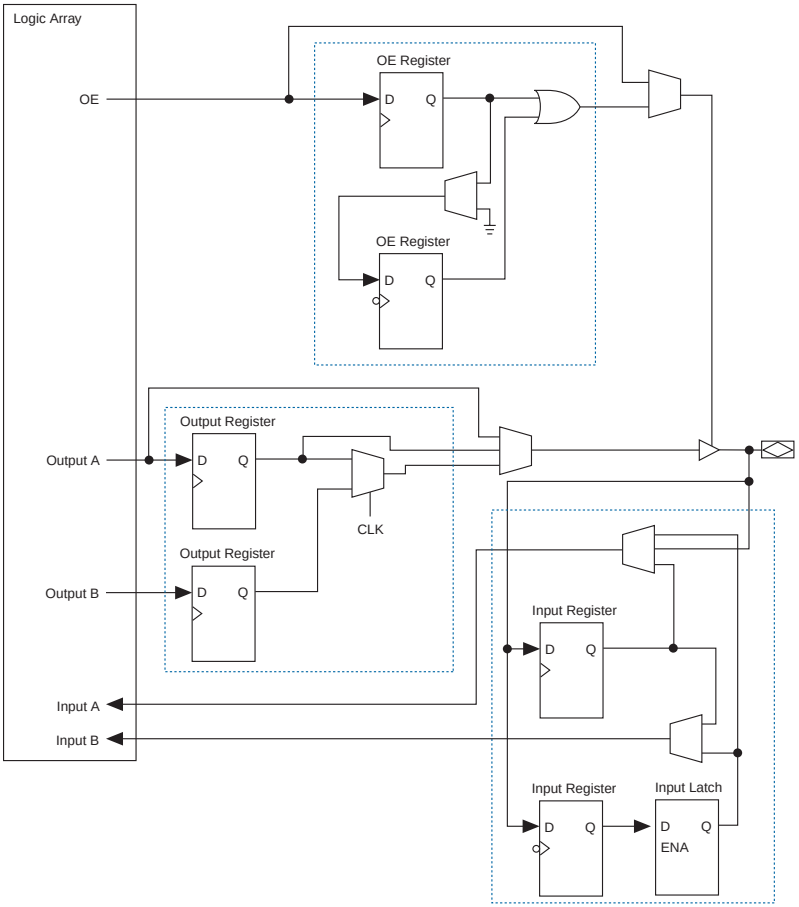

The IOEs are located in I/O blocks around the periphery of the Stratix GX device. There are up to four IOEs per row I/O block and six IOEs per column I/O block. The row I/O blocks drive row, column, or direct link interconnects. The column I/O blocks drive column interconnects. Figure 4–59 shows how a row I/O block connects to the logic array. Figure 4–60 shows how a column I/O block connects to the logic array.

Figure 4–59. Row I/O Block Connection to the Interconnect

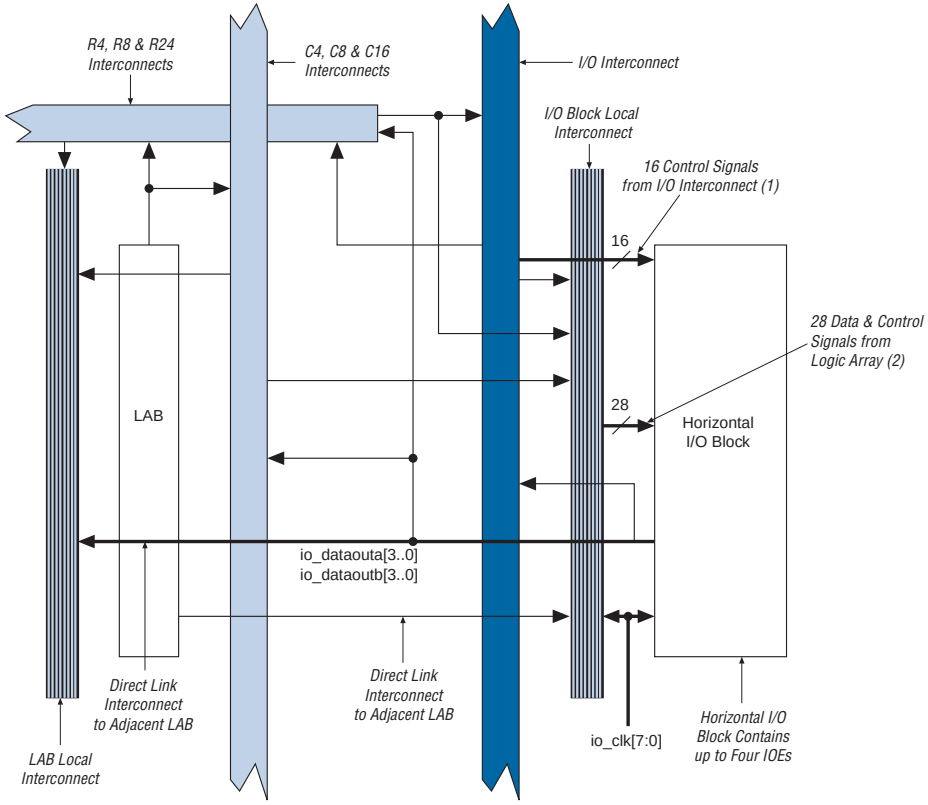

Notes to Figure 4–59:

(1) The 16 control signals are composed of four output enables `io_boe[3..0]`, four clock enables `io_bce[3..0]`, four clocks `io_clk[3..0]`, and four clear signals `io_bclr[3..0]`.

(2) The 28 data and control signals consist of eight data out lines: four lines each for DDR applications `io_dataouta[3..0]` and `io_dataoutb[3..0]`, four output enables `io_coe[3..0]`, four input clock enables `io_cce_in[3..0]`, four output clock enables `io_cce_out[3..0]`, four clocks `io_cclk[3..0]`, and four clear signals `io_cclr[3..0]`.

Figure 4–60. Column I/O Block Connection to the Interconnect

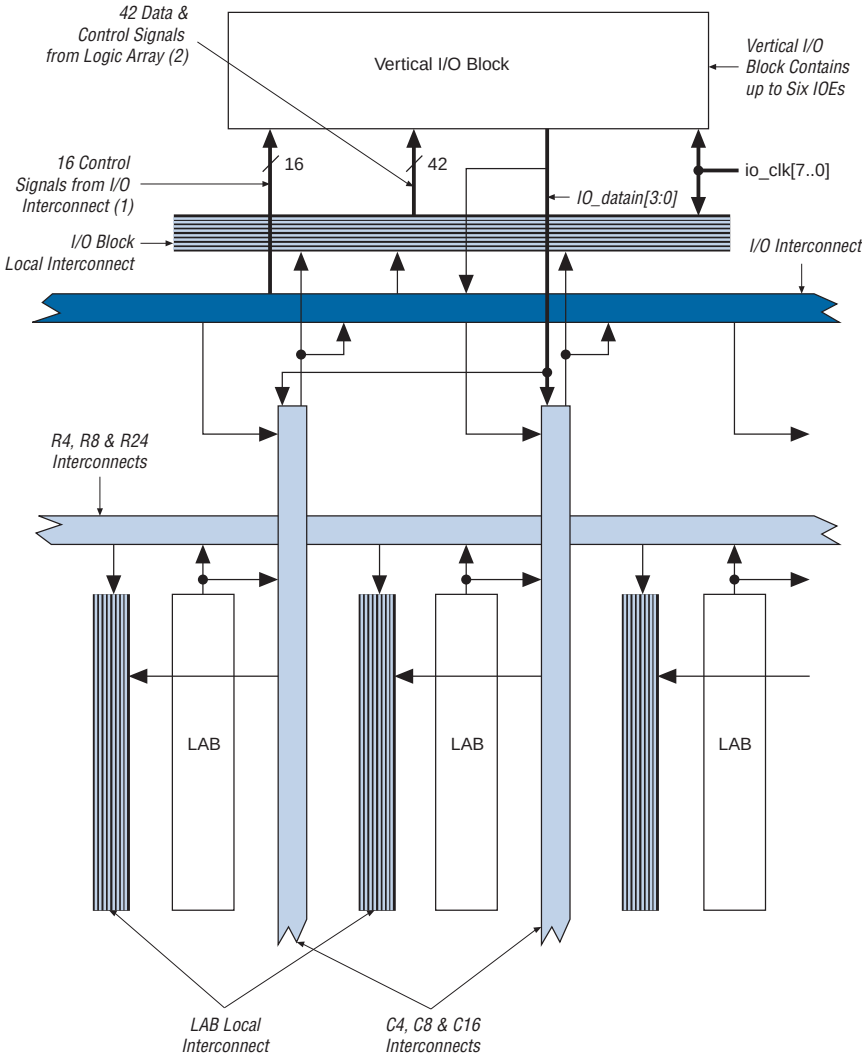

Notes to Figure 4–60:

(1) The 16 control signals are composed of four output enables `io_boe[3..0]`, four clock enables `io_bce[3..0]`, four clocks `io_bclk[3..0]`, and four clear signals `io_bclr[3..0]`.

(2) The 42 data and control signals consist of 12 data out lines; six lines each for DDR applications `io_dataouta[5..0]` and `io_dataoutb[5..0]`, six output enables `io_coe[5..0]`, six input clock enables `io_cce_in[5..0]`, six output clock enables `io_cce_out[5..0]`, six clocks `io_cclk[5..0]`, and six clear signals `io_cclr[5..0]`.

EP1SGX25DF1020C7 Intel IC FPGA 607 I/O 1020FBGA

Stratix GX devices have an I/O interconnect similar to the R4 and C4 interconnect to drive high-fanout signals to and from the I/O blocks. There are 16 signals that drive into the I/O blocks composed of four output enables `io_boe[3..0]`, four clock enables `io_bce[3..0]`, four clocks `io_bclk[3..0]`, and four clear signals `io_bclr[3..0]`. The pin's `datain` signals can drive the IO interconnect, which in turn drives the logic array or other I/O blocks. In addition, the control and data signals can be driven from the logic array, providing a slower but more flexible routing resource. The row or column IOE clocks, `io_clk[7..0]`, provide a dedicated routing resource for low-skew, high-speed clocks. I/O clocks are generated from regional, global, or fast regional clocks (see "PLLs & Clock Networks" on page 4–68). Figure 4–61 illustrates the signal paths through the I/O block.

Figure 4–61. Signal Path Through the I/O Block

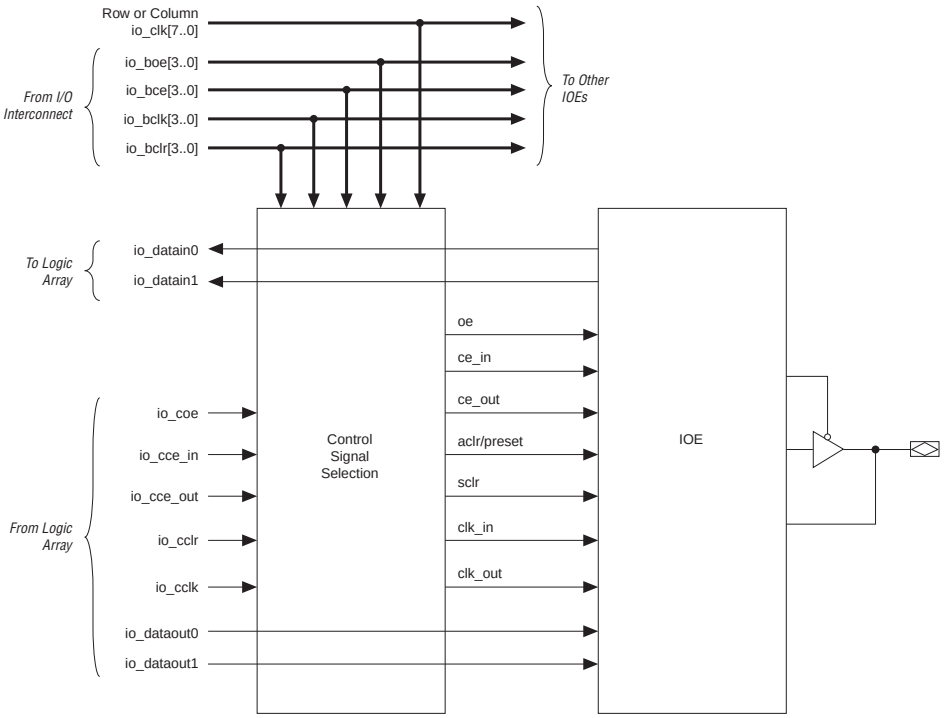

Each IOE contains its own control signal selection for the following control signals: `oe`, `ce_in`, `ce_out`, `aclr/preset`, `sclr/preset`, `clk_in`, and `clk_out`. Figure 4–62 illustrates the control signal selection.

Figure 4–62. Control Signal Selection per IOE

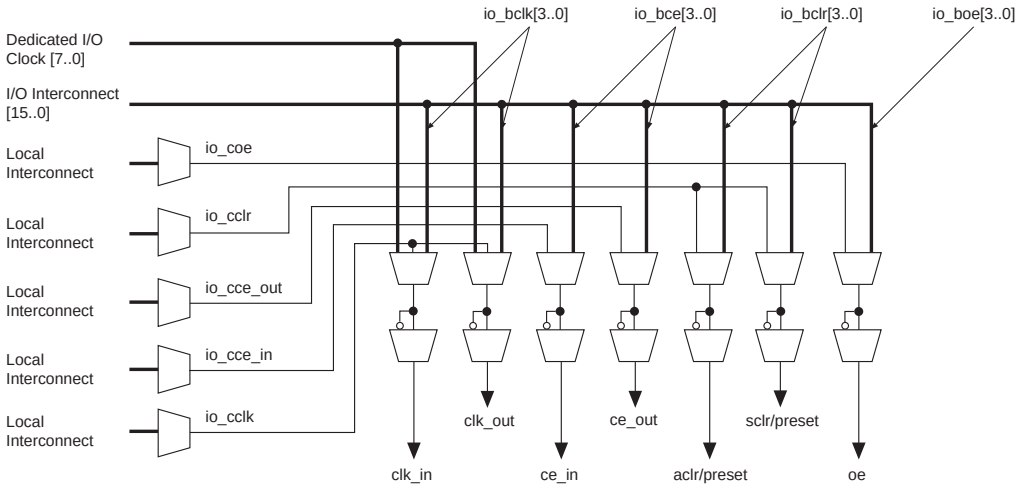

In normal bidirectional operation, the input register can be used for input data requiring fast setup times. The input register can have its own clock input and clock enable separate from the OE and output registers. The output register can be used for data requiring fast clock-to-output performance. The OE register can be used for fast clock-to-output enable timing. The OE and output register share the same clock source and the same clock enable source from local interconnect in the associated LAB, dedicated I/O clocks, and the column and row interconnects. Figure 4–63 shows the IOE in bidirectional configuration.

Figure 4–63. Stratix GX IOE in Bidirectional I/O Configuration *Note (1)*

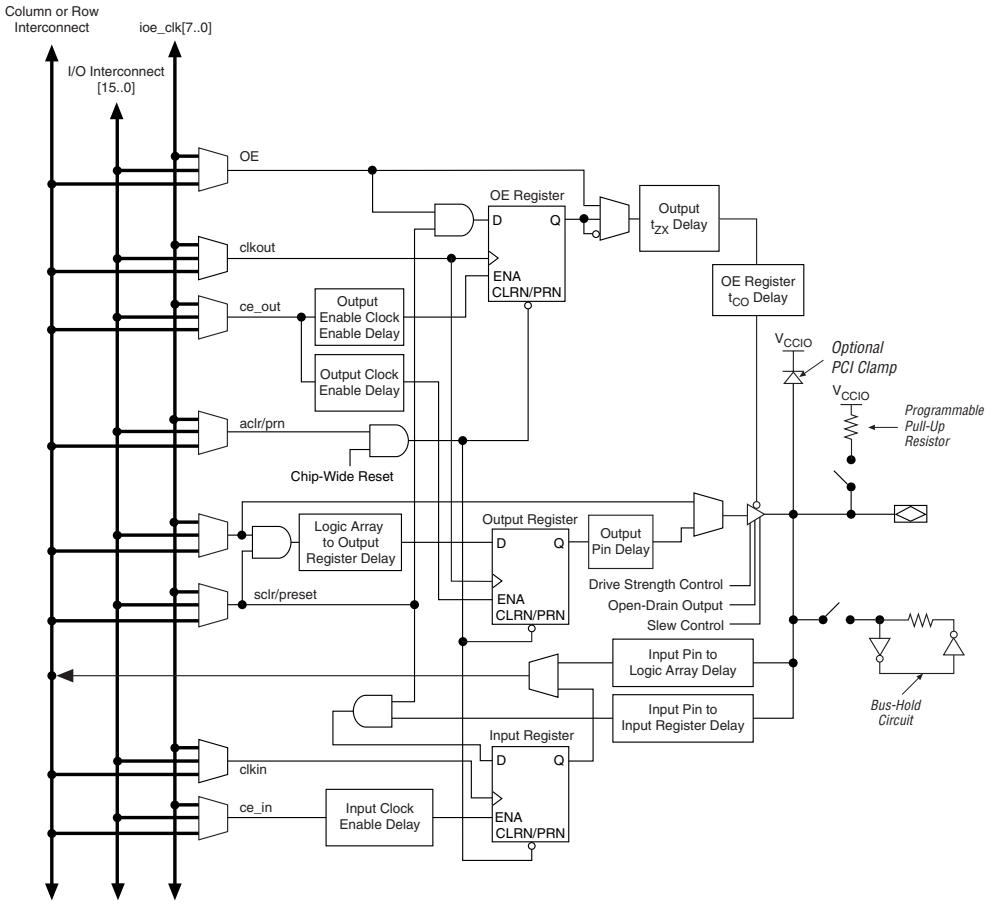

Note to Figure 4–63:

(1) All input signals to the IOE can be inverted at the IOE.

The Stratix GX device IOE includes programmable delays that can be activated to ensure zero hold times, input IOE register-to-logic array register transfers, or logic array-to-output IOE register transfers.

A path in which a pin directly drives a register may require the delay to ensure zero hold time, whereas a path in which a pin drives a register through combinatorial logic may not require the delay. Programmable delays exist for decreasing input-pin-to-logic-array and IOE input register delays. The Quartus II Compiler can program these delays to automatically minimize setup time while providing a zero hold time.

EP1SGX25DF1020C7 Intel IC FPGA 607 I/O 1020FBGA

Programmable delays can increase the register-to-pin delays for output and/or output enable registers. A programmable delay exists to increase the t_{ZX} delay to the output pin, which is required for ZBT interfaces. Table 4–21 shows the programmable delays for Stratix GX devices.

Table 4–21. Stratix GX Programmable Delay Chain

Programmable Delays	Quartus II Logic Option
Input pin to logic array delay	Decrease input delay to internal cells
Input pin to input register delay	Decrease input delay to input register
Output pin delay	Increase delay to output pin
Output enable register t_{CO} delay	Increase delay to output enable pin
Output t_{ZX} delay	Increase t_{ZX} delay to output pin
Output clock enable delay	Increase output clock enable delay
Input clock enable delay	Increase input clock enable delay
Logic array to output register delay	Decrease input delay to output register
Output enable clock enable delay	Increase output enable clock enable delay

The IOE registers in Stratix GX devices share the same source for clear or preset. You can program preset or clear for each individual IOE. You can also program the registers to power up high or low after configuration is complete. If programmed to power up low, an asynchronous clear can control the registers. If programmed to power up high, an asynchronous preset can control the registers. This feature prevents the inadvertent activation of another device's active-low input upon power-up. If one register in an IOE uses a preset or clear signal then all registers in the IOE must use that same signal if they require preset or clear. Additionally, a synchronous reset signal is available for the IOE registers.

Double-Data Rate I/O Pins

Stratix GX devices have six registers in the IOE, which support DDR interfacing by clocking data on both positive and negative clock edges. The IOEs in Stratix GX devices support DDR inputs, DDR outputs, and bidirectional DDR modes.

When using the IOE for DDR inputs, the two input registers clock double rate input data on alternating edges. An input latch is also used within the IOE for DDR input acquisition. The latch holds the data that is present during the clock high times. This allows both bits of data to be synchronous with the same clock edge (either rising or falling). Figure 4–64 shows an IOE configured for DDR input. Figure 4–65 shows the DDR input timing diagram.

Figure 4–64. Stratix GX IOE in DDR Input I/O Configuration *Note (1)*

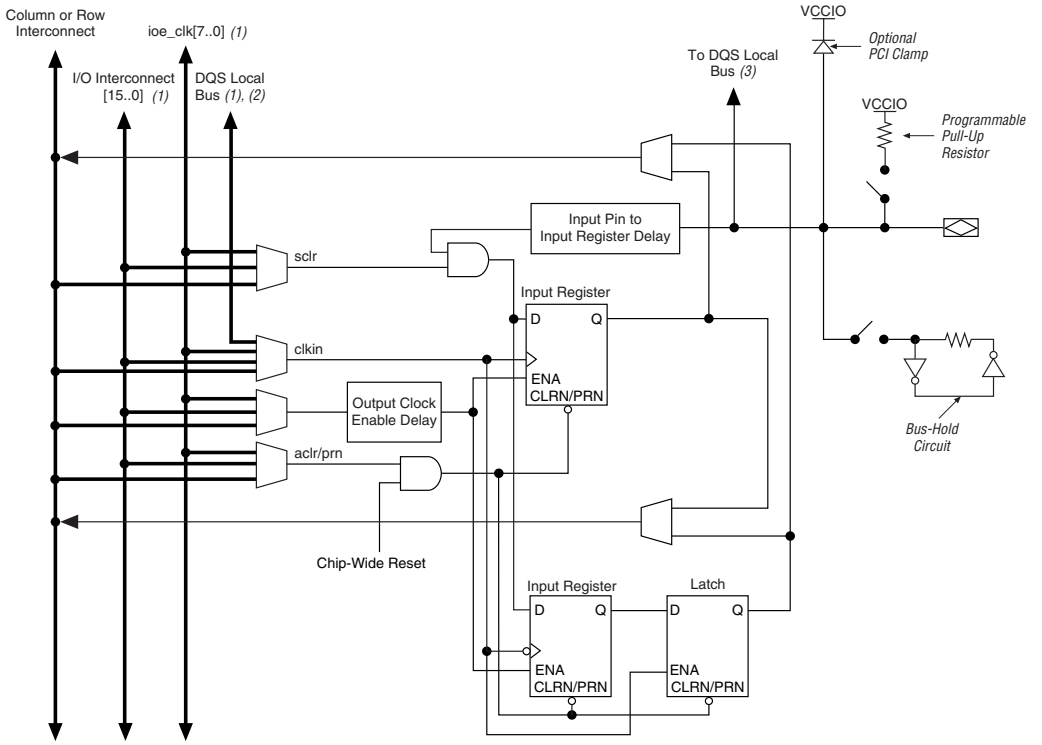

Notes to Figure 4–64:

(1) All input signals to the IOE can be inverted at the IOE.

(2) This signal connection is only allowed on dedicated DQ function pins.

(3) This signal is for dedicated DQS function pins only.

EP1SGX25DF1020C7 Intel IC FPGA 607 I/O 1020FBGA

Figure 4–65. Input Timing Diagram in DDR Mode

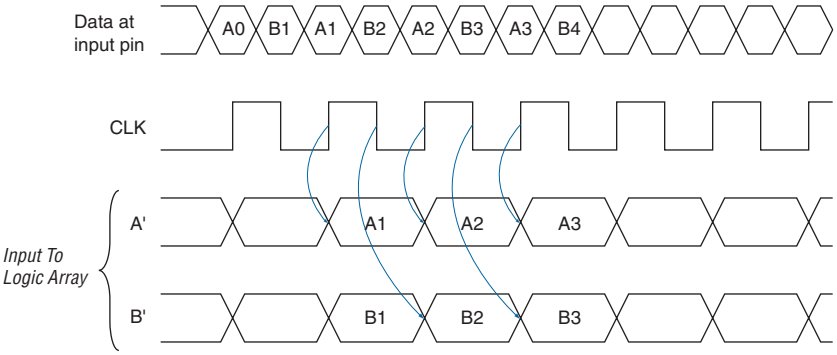

When using the IOE for DDR outputs, the two output registers are configured to clock two data paths from LEs on rising clock edges. These output registers are multiplexed by the clock to drive the output pin at a ×2 rate. One output register clocks the first bit out on the clock high time, while the other output register clocks the second bit out on the clock low time. Figure 4–66 shows the IOE configured for DDR output. Figure 4–67 shows the DDR output timing diagram.

Figure 4–66. Stratix GX IOE in DDR Output I/O Configuration *Notes (1), (2)*

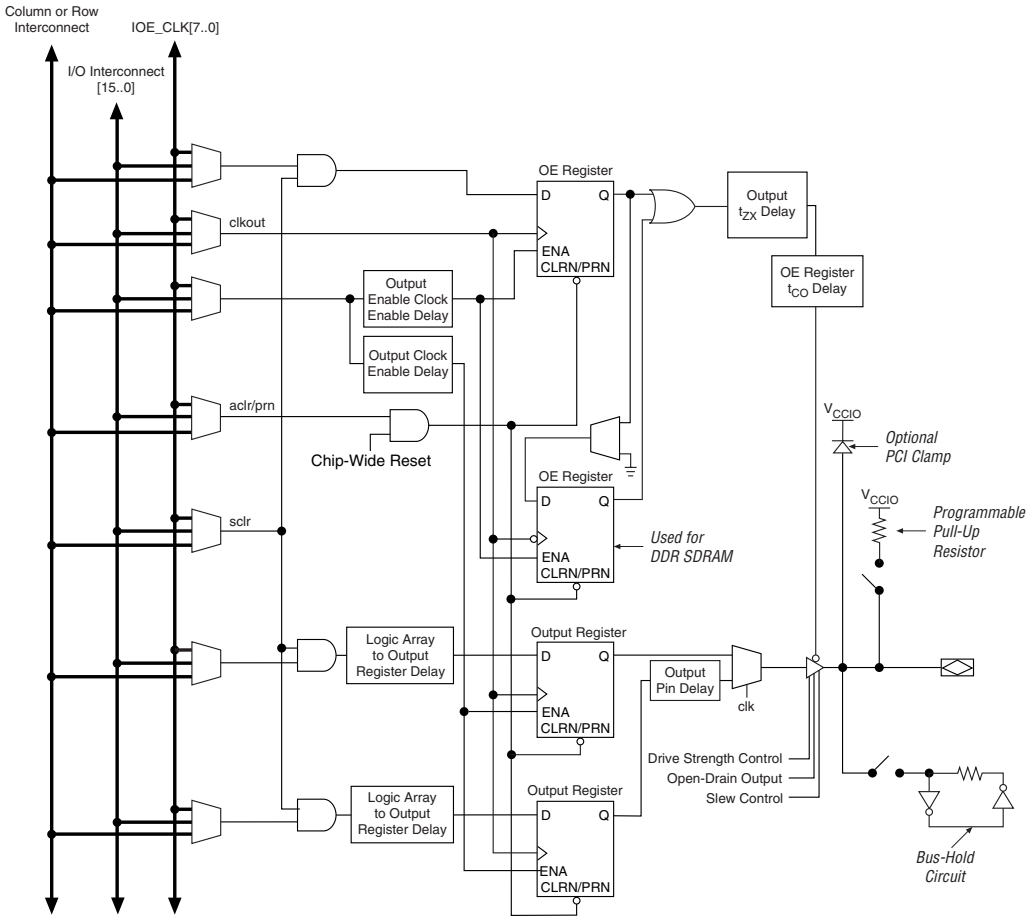

Notes to Figure 4–66:

(1) All input signals to the IOE can be inverted at the IOE.

(2) The tristate is by default active high. It can, however, be designed to be active low.

EP1SGX25DF1020C7 Intel IC FPGA 607 I/O 1020FBGA

Figure 4–67. Output Timing Diagram in DDR Mode

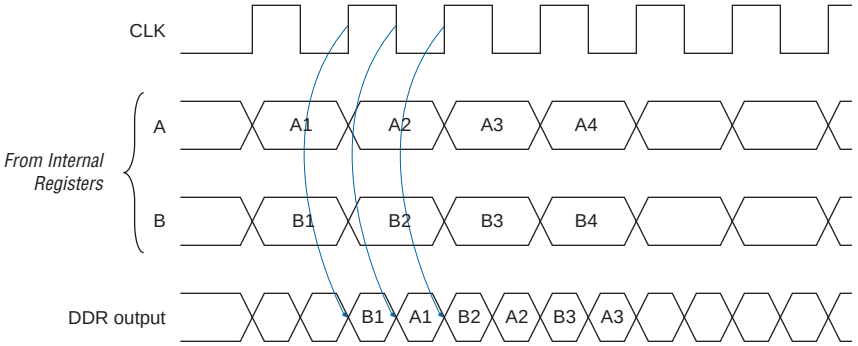

The Stratix GX IOE operates in bidirectional DDR mode by combining the DDR input and DDR output configurations. Stratix GX device I/O pins transfer data on a DDR bidirectional bus to support DDR SDRAM. The negative-edge-clocked OE register holds the OE signal inactive until the falling edge of the clock. This is done to meet DDR SDRAM timing requirements.

External RAM Interfacing

Stratix GX devices support DDR SDRAM at up to 200 MHz (400-Mbps data rate) through dedicated phase-shift circuitry, QDR and QDRII SRAM interfaces up to 167 MHz, and ZBT SRAM interfaces up to 200 MHz. Stratix GX devices also provide preliminary support for reduced latency DRAM II (RLDRAM II) at rates up to 200 MHz through the dedicated phase-shift circuitry.

In addition to the required signals for external memory interfacing, Stratix GX devices offer the optional clock enable signal. By default the Quartus II software sets the clock enable signal high, which tells the output register to update with new values. The output registers hold their own values if the design sets the clock enable signal low. See Figure 4–63.

To find out more about the DDR SDRAM specification, see the JEDEC web site (**www.jedec.org**). For information on memory controller megafunctions for Stratix GX devices, see the Altera web site (**www.altera.com**). See *AN 342: Interfacing DDR SDRAM with Stratix & Stratix GX Devices* for more information on DDR SDRAM interface in Stratix GX. Also see *AN 349: QDR SRAM Controller Reference Design for Stratix & Stratix GX Devices* and *AN 329: ZBT SRAM Controller Reference Design for Stratix & Stratix GX Devices*.

EP1SGX25DF1020C7 Intel IC FPGA 607 I/O 1020FBGA

Table 4–22 shows the performance specification for DDR SDRAM, RLDRAM II, QDR SRAM, QDRII SRAM, and ZBT SRAM interfaces in EP1SGX10 through EP1SGX40 devices. The DDR SDRAM and QDR SRAM numbers in Table 4–22 have been verified with hardware characterization with third-party DDR SDRAM and QDR SRAM devices over temperature and voltage extremes.

Table 4–22. External RAM Support in EP1SGX10 Through EP1SGX40 Devices

DDR Memory Type	I/O Standard	Maximum Clock Rate (MHz)		
		-5 Speed Grade	-6 Speed Grade	-7 Speed Grade
DDR SDRAM *(1)*, *(2)*	SSTL-2	200	167	133
DDR SDRAM - side banks *(2)*, *(3)*, *(4)*	SSTL-2	150	133	133
RLDRAM II *(4)*	1.8-V HSTL	200	*(5)*	*(5)*
QDR SRAM *(6)*	1.5-V HSTL	167	167	133
QDRII SRAM *(6)*	1.5-V HSTL	200	167	133
ZBT SRAM *(7)*	LVTTL	200	200	167

Notes to Table 4–22:

(1) These maximum clock rates apply if the Stratix GX device uses DQS phase-shift circuitry to interface with DDR SDRAM. DQS phase-shift circuitry is only available in the top and bottom I/O banks (I/O banks 3, 4, 7, and 8).
(2) For more information on DDR SDRAM, see *AN 342: Interfacing DDR SDRAM with Stratix & Stratix GX Devices.*
(3) DDR SDRAM is supported on the Stratix GX device side I/O banks (I/O banks 1, 2, 5, and 6) without dedicated DQS phase-shift circuitry. The read DQS signal is ignored in this mode.
(4) These performance specifications are preliminary.
(5) This device does not support RLDRAM II.
(6) For more information on QDR or QDRII SRAM, see *AN 349: QDR SRAM Controller Reference Design for Stratix & Stratix GX Devices*.
(7) For more information on ZBT SRAM, see *AN 329: ZBT SRAM Controller Reference Design for Stratix & Stratix GX Devices*.

In addition to six I/O registers and one input latch in the IOE for interfacing to these high-speed memory interfaces, Stratix GX devices also have dedicated circuitry for interfacing with DDR SDRAM. In every Stratix GX device, the I/O banks at the top (I/O banks 3 and 4) and bottom (I/O banks 7 and 8) of the device support DDR SDRAM up to 200 MHz. These pins support DQS signals with DQ bus modes of ×8, ×16, or ×32.

EP1SGX25DF1020C7 Intel IC FPGA 607 I/O 1020FBGA

Table 4–23 shows the number of DQ and DQS buses that are supported per device.

Table 4–23. DQS & DQ Bus Mode Support *Note (1)*

Device	Package	Number of ×8 Groups	Number of ×16 Groups	Number of ×32 Groups
EP1SGX10	672-pin FineLine BGA	12 *(2)*	0	0
EP1SGX25	672-pin FineLine BGA	16 *(3)*	8	4
	1,020-pin FineLine BGA	20	8	4
EP1SGX40	1,020-pin FineLine BGA	20	8	4

Notes to Table 4–23:

(1) See the *Selectable I/O Standards in Stratix & Stratix GX Devices* chapter of the *Stratix GX Device Handbook, Volume 2* for V_{REF} guidelines.

(2) These packages have six groups in I/O banks 3 and 4 and six groups in I/O banks 7 and 8.

(3) These packages have eight groups in I/O banks 3 and 4 and eight groups in I/O banks 7 and 8.

A compensated delay element on each DQS pin automatically aligns input DQS synchronization signals with the data window of their corresponding DQ data signals. The DQS signals drive a local DQS bus in the top and bottom I/O banks. This DQS bus is an additional resource to the I/O clocks and clocks DQ input registers with the DQS signal.

Two separate single phase-shifting reference circuits are located on the top and bottom of the Stratix GX device. Each circuit is driven by a system reference clock through the `CLK` pins that is the same frequency as the DQS signal. Clock pins `CLK[15..12]p` feed the phase-shift circuitry on the top of the device and clock pins `CLK[7..4]p` feed the phase-shift circuitry on the bottom of the device. The phase-shifting reference circuit on the top of the device controls the compensated delay elements for all 10 DQS pins located at the top of the device. The phase-shifting reference circuit on the bottom of the device controls the compensated delay elements for all 10 DQS pins located on the bottom of the device. All 10 delay elements (DQS signals) on either the top or bottom of the device shift by the same degree amount. For example, all 10 DQS pins on the top of the device can be shifted by 90° and all 10 DQS pins on the bottom of the device can be shifted by 72°. The reference circuits require a maximum of 256 system reference clock cycles to set the correct phase on the DQS delay elements. Figure 4–68 illustrates the phase-shift reference circuit control of each DQS delay shift on the top of the device. This same circuit is duplicated on the bottom of the device.

EP1SGX25DF1020C7 Intel IC FPGA 607 I/O 1020FBGA

Figure 4–68. Simplified Diagram of the DQS Phase-Shift Circuitry

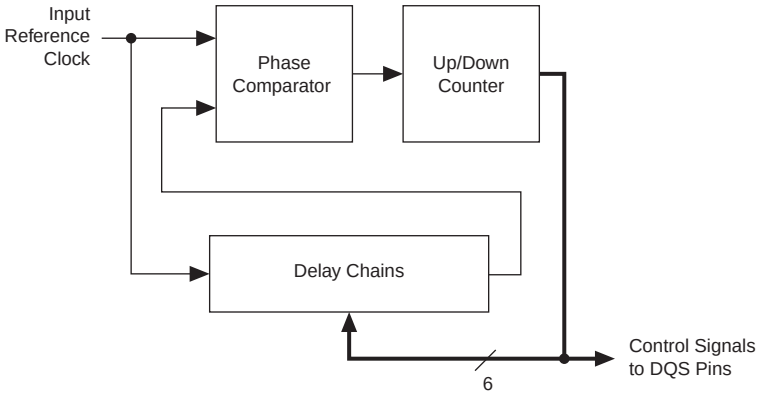

See the *External Memory Interfaces* chapter of the *Stratix GX Device Handbook, Volume 2* for more information on external memory interfaces.

Programmable Drive Strength

The output buffer for each Stratix GX device I/O pin has a programmable drive strength control for certain I/O standards. The LVTTL and LVCMOS standard has several levels of drive strength that the user can control. SSTL-3 class I and II, SSTL-2 class I and II, HSTL class I and II, and 3.3-V GTL+ support a minimum setting, the lowest drive strength that guarantees the I_{OH}/I_{OL} of the standard. Using minimum settings provides signal slew rate control to reduce system noise and signal overshoot.

EP1SGX25DF1020C7 Intel IC FPGA 607 I/O 1020FBGA

Table 4–24 shows the possible settings for the I/O standards with drive strength control.

Table 4–24. Programmable Drive Strength

I/O Standard	I_{OH} / I_{OL} Current Strength Setting (mA)
3.3-V LVTTL	24 *(1)*, 16, 12, 8, 4
3.3-V LVCMOS	24 *(2)*, 12 *(1)*, 8, 4, 2
2.5-V LVTTL/LVCMOS	16 *(1)*, 12, 8, 2
1.8-V LVTTL/LVCMOS	12 *(1)*, 8, 2
1.5-V LVCMOS	8 *(1)*, 4, 2
GTL/GTL+ 1.5-V HSTL class I and II 1.8-V HSTL class I and II SSTL-3 class I and II SSTL-2 class I and II SSTL-18 class I and II	Support maximum and minimum strength

Notes to Table 4–24:
(1) This is the Quartus II software default current setting.
(2) I/O banks 1 and 2 do not support this setting.

The Quartus II software, beginning with version 4.2, reports current strength as "PCI Compliant" for 3.3-V PCI, 3.3-V PCI-X 1.0, and Compact PCI I/O standards.

Stratix GX devices support series on-chip termination (OCT) using programmable drive strength. For more information, contact your Altera Support Representative.

Open-Drain Output

Stratix GX devices provide an optional open-drain (equivalent to an open-collector) output for each I/O pin. This open-drain output enables the device to provide system-level control signals (that is, interrupt and write-enable signals) that can be asserted by any of several devices.

EP1SGX25DF1020C7 Intel IC FPGA 607 I/O 1020FBGA

Slew-Rate Control

The output buffer for each Stratix GX device I/O pin has a programmable output slew-rate control that can be configured for low-noise or high-speed performance. A faster slew rate provides high-speed transitions for high-performance systems. However, these fast transitions may introduce noise transients into the system. A slow slew rate reduces system noise, but adds a nominal delay to rising and falling edges. Each I/O pin has an individual slew-rate control, allowing you to specify the slew rate on a pin-by-pin basis. The slew-rate control affects both the rising and falling edges.

Bus Hold

Each Stratix GX device I/O pin provides an optional bus-hold feature. The bus-hold circuitry can weakly hold the signal on an I/O pin at its last-driven state. Since the bus-hold feature holds the last-driven state of the pin until the next input signal is present, an external pull-up or pull-down resistor is not needed to hold a signal level when the bus is tri-stated.

Table 4–25 shows bus hold support for different pin types.

Table 4–25. Bus Hold Support

Pin Type	Bus Hold
I/O pins	✓
CLK[15..0]	
CLK[0,1,2,3,8,9,10,11]	
FCLK	✓
FPLL[7..10]CLK	

The bus-hold circuitry also pulls undriven pins away from the input threshold voltage where noise can cause unintended high-frequency switching. You can select this feature individually for each I/O pin. The bus-hold output drives no higher than V_{CCIO} to prevent overdriving signals. If the bus-hold feature is enabled, the programmable pull-up option cannot be used. Disable the bus-hold feature when using open-drain outputs with the GTL+ I/O standard or when the I/O pin has been configured for differential signals.

EP1SGX25DF1020C7 Intel IC FPGA 607 I/O 1020FBGA

The bus-hold circuitry uses a resistor with a nominal resistance (R_{BH}) of approximately 7 kΩ to weakly pull the signal level to the last-driven state. The chapter *DC & Switching Characteristics* of the *Stratix GX Device Handbook, Volume 1* gives the specific sustaining current driven through this resistor and the overdrive current used to identify the next-driven input level. This information is provided for each V_{CCIO} voltage level.

The bus-hold circuitry is active only after configuration. When going into user mode, the bus-hold circuit captures the value on the pin present at the end of configuration.

Programmable Pull-Up Resistor

Each Stratix GX device I/O pin provides an optional programmable pull-up resistor during user mode. If this feature is enabled for an I/O pin, the pull-up resistor (typically 25 kΩ) weakly holds the output to the V_{CCIO} level of the output pin's bank. Table 4–26 shows which pin types support the weak pull-up resistor feature.

Table 4–26. Programmable Weak Pull-Up Resistor Support

Pin Type	Programmable Weak Pull-Up Resistor
I/O pins	✓
CLK[15..0]	
FCLK	✓
FPLL[7..10]CLK	
Configuration pins	
JTAG pins	✓ *(1)*

Note to Table 4–26:
(1) TDO pins do not support programmable weak pull-up resistors.

Advanced I/O Standard Support

Stratix GX device IOEs support the following I/O standards:

- LVTTL
- LVCMOS
- 1.5 V
- 1.8 V
- 2.5 V
- 3.3-V PCI
- 3.3-V PCI-X 1.0
- 3.3-V AGP (1× and 2×)

EP1SGX25DF1020C7 Intel IC FPGA 607 I/O 1020FBGA

- LVDS
- LVPECL
- 3.3-V PCML
- HyperTransport
- Differential HSTL (on input/output clocks only)
- Differential SSTL (on output column clock pins only)
- GTL/GTL+
- 1.5-V HSTL class I and II
- 1.8-V HSTL Class I and II
- SSTL-3 class I and II
- SSTL-2 class I and II
- SSTL-18 class I and II
- CTT

Table 4–27 describes the I/O standards supported by Stratix GX devices.

Table 4–27. Stratix GX Supported I/O Standards (Part 1 of 2)

I/O Standard	Type	Input Reference Voltage (V_{REF}) (V)	Output Supply Voltage (V_{CCIO}) (V)	Board Termination Voltage (V_{TT}) (V)
LVTTL	Single-ended	N/A	3.3	N/A
LVCMOS	Single-ended	N/A	3.3	N/A
2.5 V	Single-ended	N/A	2.5	N/A
1.8 V	Single-ended	N/A	1.8	N/A
1.5 V	Single-ended	N/A	1.5	N/A
3.3-V PCI	Single-ended	N/A	3.3	N/A
3.3-V PCI-X 1.0	Single-ended	N/A	3.3	N/A
LVDS	Differential	N/A	3.3	N/A
LVPECL	Differential	N/A	3.3	N/A
3.3-V PCML	Differential	N/A	3.3	N/A
HyperTransport	Differential	N/A	2.5	N/A
Differential HSTL *(1)*	Differential	0.75	1.5	0.75
Differential SSTL *(2)*	Differential	1.25	2.5	1.25
GTL	Voltage-referenced	0.8	N/A	1.20
GTL+	Voltage-referenced	1.0	N/A	1.5
1.5-V HSTL class I and II	Voltage-referenced	0.75	1.5	0.75
1.8-V HSTL class I and II	Voltage-referenced	0.9	1.8	0.9
SSTL-18 class I and II	Voltage-referenced	0.90	1.8	0.90
SSTL-2 class I and II	Voltage-referenced	1.25	2.5	1.25

EP1SGX25DF1020C7 Intel IC FPGA 607 I/O 1020FBGA

Table 4–27. Stratix GX Supported I/O Standards (Part 2 of 2)

I/O Standard	Type	Input Reference Voltage (V_{REF}) (V)	Output Supply Voltage (V_{CCIO}) (V)	Board Termination Voltage (V_{TT}) (V)
SSTL-3 class I and II	Voltage-referenced	1.5	3.3	1.5
AGP (1× and 2×)	Voltage-referenced	1.32	3.3	N/A
CTT	Voltage-referenced	1.5	3.3	1.5

Notes to Table 4–27:
(1) This I/O standard is only available on input and output clock pins.
(2) This I/O standard is only available on output column clock pins.

For more information on I/O standards supported by Stratix GX devices, see the *Selectable I/O Standards in Stratix & Stratix GX Devices* chapter of the *Stratix GX Device Handbook, Volume 2*.

Stratix GX devices contain eight I/O banks in addition to the four enhanced PLL external clock out banks, as shown in Figure 4–69. The four I/O banks on the right and left of the device contain circuitry to support high-speed differential I/O for LVDS, LVPECL, 3.3-V PCML, and HyperTransport inputs and outputs. These banks support all I/O standards listed in Table 4–27 except PCI I/O pins or PCI-X 1.0, GTL, SSTL-18 Class II, and HSTL Class II outputs. The top and bottom I/O banks support all single-ended I/O standards. Additionally, Stratix GX devices support four enhanced PLL external clock output banks, allowing clock output capabilities such as differential support for SSTL and HSTL. Table 4–28 shows I/O standard support for each I/O bank.

Figure 4–69. Stratix GX I/O Banks *Notes (1), (2), (3)*

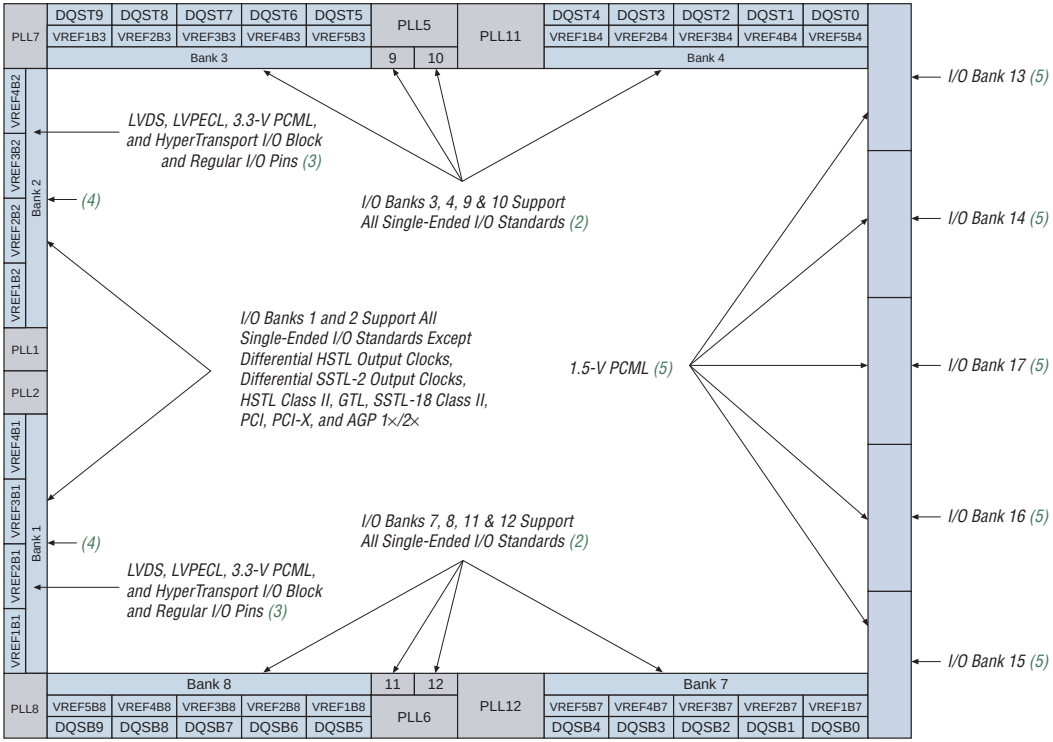

Notes to Figure 4–69:

(1) Figure 4–69 is a top view of the Stratix GX silicon die.

(2) Banks 9 through 12 are enhanced PLL external clock output banks.

(3) If the high-speed differential I/O pins are not used for high-speed differential signaling, they can support all of the I/O standards except HSTL class I and II, GTL, SSTL-18 Class II, PCI, PCI-X, and AGP 1×/2×.

(4) For guidelines for placing single-ended I/O pads next to differential I/O pads, see the *Selectable I/O Standards in Stratix & Stratix GX Devices* chapter in the *Stratix GX Device Handbook, Volume 2*.

(5) These I/O banks in Stratix GX devices also support the LVDS, LVPECL, and 3.3-V PCML I/O standards on reference clocks and receiver input pins (AC coupled)

EP1SGX25DF1020C7 Intel IC FPGA 607 I/O 1020FBGA

Table 4–28 shows I/O standard support for each I/O bank.

Table 4–28. I/O Support by Bank (Part 1 of 2)

I/O Standard	Top & Bottom Banks (3, 4, 7 & 8)	Left Banks (1 & 2)	Enhanced PLL External Clock Output Banks (9, 10, 11 & 12)
LVTTL	✓	✓	✓
LVCMOS	✓	✓	✓
2.5 V	✓	✓	✓
1.8 V	✓	✓	✓
1.5 V	✓	✓	✓
3.3-V PCI	✓		✓
3.3-V PCI-X 1.0	✓		✓
LVPECL		✓	✓
3.3-V PCML		✓	✓
LVDS		✓	✓
HyperTransport technology		✓	✓
Differential HSTL (clock inputs)	✓	✓	
Differential HSTL (clock outputs)			✓
Differential SSTL (clock outputs)			✓
3.3-V GTL	✓		✓
3.3-V GTL+	✓	✓	✓
1.5-V HSTL class I	✓	✓	✓
1.5-V HSTL class II	✓		✓
1.8-V HSTL class I	✓	✓	✓
1.8-V HSTL class II	✓		✓
SSTL-18 class I	✓	✓	✓
SSTL-18 class II	✓		✓
SSTL-2 class I	✓	✓	✓
SSTL-2 class II	✓	✓	✓
SSTL-3 class I	✓	✓	✓

EP1SGX25DF1020C7 Intel IC FPGA 607 I/O 1020FBGA

Table 4–28. I/O Support by Bank (Part 2 of 2)

I/O Standard	Top & Bottom Banks (3, 4, 7 & 8)	Left Banks (1 & 2)	Enhanced PLL External Clock Output Banks (9, 10, 11 & 12)
SSTL-3 class II	✓	✓	✓
AGP (1× and 2×)	✓		✓
CTT	✓	✓	✓

Each I/O bank has its own VCCIO pins. A single device can support 1.5-, 1.8-, 2.5-, and 3.3-V interfaces; each bank can support a different standard independently. Each bank also has dedicated VREF pins to support any one of the voltage-referenced standards (such as SSTL-3) independently.

Each I/O bank can support multiple standards with the same V_{CCIO} for input and output pins. Each bank can support one voltage-referenced I/O standard. For example, when V_{CCIO} is 3.3 V, a bank can support LVTTL, LVCMOS, 3.3-V PCI, and SSTL-3 for inputs and outputs.

Differential On-Chip Termination

Stratix GX devices provide differential on-chip termination (LVDS I/O standard) to reduce reflections and maintain signal integrity. Differential on-chip termination simplifies board design by minimizing the number of external termination resistors required. Termination can be placed inside the package, eliminating small stubs that can still lead to reflections. The internal termination is designed using transistors in the linear region of operation.

Stratix GX devices support internal differential termination with a nominal resistance value of 137.5 Ω for LVDS input receiver buffers. LVPECL signals require an external termination resistor. Figure 4–70 shows the device with differential termination.

Figure 4–70. LVDS Input Differential On-Chip Termination

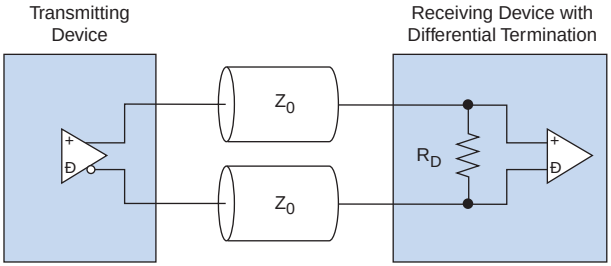

I/O banks on the left and right side of the device support LVDS receiver (far-end) differential termination.

Table 4–29 shows the Stratix GX device differential termination support.

Table 4–29. Differential Termination Supported by I/O Banks

Differential Termination Support	I/O Standard Support	Top & Bottom Banks (3, 4, 7 & 8)	Left Banks (1 & 2)
Differential termination *(1)*, *(2)*	LVDS		✓

Notes to Table 4–29:
(1) Clock pin CLK0, CLK2, CLK9, CLK11, and pins FPLL[7..10]CLK do not support differential termination.
(2) Differential termination is only supported for LVDS because of a 3.3-V V_{CCIO}.

Table 4–30 shows the termination support for different pin types.

Table 4–30. Differential Termination Support Across Pin Types

Pin Type	R_D
Top and bottom I/O banks (3, 4, 7, and 8)	
DIFFIO_RX[]	✓
CLK[0,2,9,11],CLK[4-7],CLK[12-15]	
CLK[1,3,8,10]	✓
FCLK	
FPLL[7..10]CLK	

The differential on-chip resistance at the receiver input buffer is 118 Ω ±20 %.

EP1SGX25DF1020C7 Intel IC FPGA 607 I/O 1020FBGA

However, there is additional resistance present between the device ball and the input of the receiver buffer, as shown in Figure 4–71. This resistance is because of package trace resistance (which can be calculated as the resistance from the package ball to the pad) and the parasitic layout metal routing resistance (which is shown between the pad and the intersection of the on-chip termination and input buffer).

Figure 4–71. Differential Resistance of LVDS Differential Pin Pair (R_D)

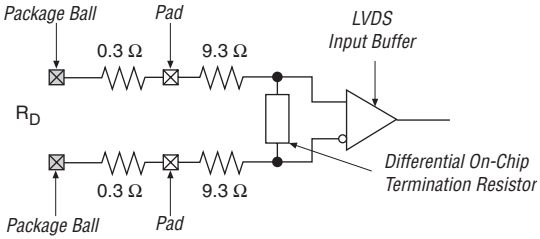

Table 4–31 defines the specification for internal termination resistance for commercial devices.

Table 4–31. Differential On-Chip Termination

Symbol	Description	Conditions	Resistance			Unit
			Min	Typ	Max	
R_D *(2)*	Internal differential termination for LVDS	Commercial *(1)*, *(3)*	110	135	165	Ω
		Industrial *(2)*, *(3)*	100	135	170	Ω

Notes to Table 4–31:

(1) Data measured over minimum conditions (T_j = 0 C, V_{CCIO} +5%) and maximum conditions (T_j = 85 C, V_{CCIO} = –5%).

(2) Data measured over minimum conditions (T_j = –40 C, V_{CCIO} +5%) and maximum conditions (T_j = 100 C, V_{CCIO} = –5%).

(3) LVDS data rate is supported for 840 Mbps using internal differential termination.

MultiVolt I/O Interface

The Stratix GX architecture supports the MultiVolt I/O interface feature, which allows Stratix GX devices in all packages to interface with systems of different supply voltages.

The Stratix GX VCCINT pins must always be connected to a 1.5-V power supply. With a 1.5-V V_{CCINT} level, input pins are 1.5-V, 1.8-V, 2.5-V, and 3.3-V tolerant. The VCCIO pins can be connected to either a 1.5-V, 1.8-V,

EP1SGX25DF1020C7 Intel IC FPGA 607 I/O 1020FBGA

2.5-V, or 3.3-V power supply, depending on the output requirements. The output levels are compatible with systems of the same voltage as the power supply (for example, when VCCIO pins are connected to a 1.5-V power supply, the output levels are compatible with 1.5-V systems). When VCCIO pins are connected to a 3.3-V power supply, the output high is 3.3 V and is compatible with 3.3-V or 5.0-V systems.

Table 4–32 summarizes Stratix GX MultiVolt I/O support.

Table 4–32. Stratix GX MultiVolt I/O Support *Note (1)*

V_{CCIO} (V)	Input Signal (5)					Output Signal (6)				
	1.5 V	1.8 V	2.5 V	3.3 V	5.0 V	1.5 V	1.8 V	2.5 V	3.3 V	5.0 V
1.5	✓	✓	✓ (2)	✓ (2)		✓				
1.8	✓ (2)	✓	✓ (2)	✓ (2)		✓ (3)	✓			
2.5			✓	✓		✓ (3)	✓ (3)	✓		
3.3			✓ (2)	✓	✓ (4)	✓ (3)	✓ (3)	✓ (3)	✓	✓

Notes to Table 4–32:

(1) To drive inputs higher than V_{CCIO} but less than 4.1 V, disable the PCI clamping diode. However, to drive 5.0-V inputs to the device, enable the PCI clamping diode to prevent V_I from rising above 4.0 V.

(2) The input pin current may be slightly higher than the typical value.

(3) Although V_{CCIO} specifies the voltage necessary for the Stratix GX device to drive out, a receiving device powered at a different level can still interface with the Stratix GX device if it has inputs that tolerate the V_{CCIO} value.

(4) Stratix GX devices can be 5.0-V tolerant with the use of an external resistor and the internal PCI clamp diode.

(5) This is the external signal that is driving the Stratix GX device.

(6) This represents the system voltage that Stratix GX supports when a VCCIO pin is connected to a specific voltage level. For example, when VCCIO is 3.3 V and if the I/O standard is LVTTL/LVCMOS, the output high of the signal coming out from Stratix GX is 3.3 V and is compatible with 3.3-V or 5.0-V systems.

Power Sequencing & Hot Socketing

Because Stratix GX devices can be used in a mixed-voltage environment, they have been designed specifically to tolerate any possible power-up sequence. Therefore, the VCCIO and VCCINT power supplies may be powered in any order.

Signals can be driven into Stratix GX devices before and during power up without damaging the device. In addition, Stratix GX devices do not drive out during power up. Once operating conditions are reached and the device is configured, Stratix GX devices operate as specified by the user. For more information, see the *Selectable I/O Standards in Stratix & Stratix GX Devices* chapter of the *Stratix GX Device Handbook, Volume 2*.

EP1SGX25DF1020C7 Intel IC FPGA 607 I/O 1020FBGA

IEEE Std. 1149.1 (JTAG) Boundary-Scan Support

All Stratix GX devices provide JTAG BST circuitry that complies with the IEEE Std. 1149.1a-1990 specification. JTAG boundary-scan testing can be performed either before or after, but not during configuration. Stratix GX devices can also use the JTAG port for configuration together with either the Quartus II software or hardware using either Jam Files (**.jam**) or Jam Byte-Code Files (**.jbc**).

Stratix GX devices support IOE I/O standard setting reconfiguration through the JTAG BST chain. The JTAG chain can update the I/O standard for all input and output pins any time before or during user mode. You can use this ability for JTAG testing before configuration when some of the Stratix GX pins drive or receive from other devices on the board using voltage-referenced standards. Because the Stratix GX device may not be configured before JTAG testing, the I/O pins may not be configured for appropriate electrical standards for chip-to-chip communication. Programming those I/O standards via JTAG allows you to fully test I/O connection to other devices.

The enhanced PLL reconfiguration bits are part of the JTAG chain before configuration and after power-up. After device configuration, the PLL reconfiguration bits are not part of the JTAG chain.

Stratix GX devices also use the JTAG port to monitor the logic operation of the device with the SignalTap® embedded logic analyzer. Stratix GX devices support the JTAG instructions shown in Table 4–33.

Table 4–33. Stratix GX JTAG Instructions (Part 1 of 2)

JTAG Instruction	Description
SAMPLE/PRELOAD	Allows a snapshot of signals at the device pins to be captured and examined during normal device operation, and permits an initial data pattern to be output at the device pins. Also used by the SignalTap® embedded logic analyzer.
EXTEST *(1)*	Allows the external circuitry and board-level interconnects to be tested by forcing a test pattern at the output pins and capturing test results at the input pins.
BYPASS	Places the 1-bit bypass register between the TDI and TDO pins, which allows the BST data to pass synchronously through selected devices to adjacent devices during normal device operation.
USERCODE	Selects the 32-bit USERCODE register and places it between the TDI and TDO pins, allowing the USERCODE to be serially shifted out of TDO.
IDCODE	Selects the IDCODE register and places it between TDI and TDO, allowing the IDCODE to be serially shifted out of TDO.
HIGHZ *(1)*	Places the 1-bit bypass register between the TDI and TDO pins, which allows the BST data to pass synchronously through selected devices to adjacent devices during normal device operation, while tri-stating all of the I/O pins.

EP1SGX25DF1020C7 Intel IC FPGA 607 I/O 1020FBGA

Table 4–33. Stratix GX JTAG Instructions (Part 2 of 2)

JTAG Instruction	Description
CLAMP *(1)*	Places the 1-bit bypass register between the TDI and TDO pins, which allows the BST data to pass synchronously through selected devices to adjacent devices during normal device operation while holding I/O pins to a state defined by the data in the boundary-scan register.
ICR instructions	Used when configuring a Stratix GX device through the JTAG port with a MasterBlaster™ or ByteBlasterMV™ download cable, or when using a .jam file or .jbc file with an embedded processor.
PULSE_NCONFIG	Emulates pulsing the nCONFIG pin low to trigger reconfiguration even though the physical pin is unaffected.
CONFIG_IO	Allows the IOE standards to be configured through the JTAG chain. Stops configuration if executed during configuration. Can be executed before or after configuration.
SignalTap instructions	Monitors internal device operation with the SignalTap embedded logic analyzer.

Note to Table 4–33:
(1) Bus hold and weak pull-up resistor features override the high-impedance state of HIGHZ, CLAMP, and EXTEST.

The Stratix GX device instruction register length is 10 bits, and the USERCODE register length is 32 bits. Tables 4–34 and 4–35 show the boundary-scan register length and IDCODE information for Stratix GX devices.

Table 4–34. Stratix GX Boundary-Scan Register Length

Device	Boundary-Scan Register Length
EP1SGX10	1,029
EP1SGX25	1,665
EP1SGX40	1,941

Table 4–35. 32-Bit Stratix GX Device IDCODE (Part 1 of 2)

Device	IDCODE (32 Bits) *(1)*			
	Version (4 Bits)	Part Number (16 Bits)	Manufacturer Identity (11 Bits)	LSB (1 Bit) *(2)*
EP1SGX10	0000	0010 0000 0100 0001	000 0110 1110	1
EP1SGX25	0000	0010 0000 0100 0011	000 0110 1110	1

EP1SGX25DF1020C7 Intel IC FPGA 607 I/O 1020FBGA

Table 4–35. 32-Bit Stratix GX Device IDCODE (Part 2 of 2)

Device	IDCODE (32 Bits) *(1)*			
	Version (4 Bits)	Part Number (16 Bits)	Manufacturer Identity (11 Bits)	LSB (1 Bit) *(2)*
EP1SGX40	0000	0010 0000 0100 0101	000 0110 1110	1

Notes to Table 4–35:
(1) The most significant bit (MSB) is at the left end of the string.
(2) The IDCODE's least significant bit (LSB) is always 1.

Figure 4–72 shows the timing requirements for the JTAG signals.

Figure 4–72. Stratix GX JTAG Waveforms

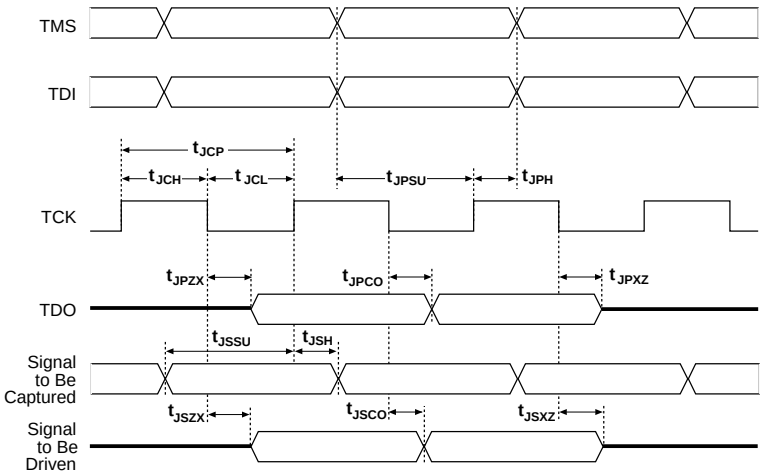

Table 4–36 shows the JTAG timing parameters and values for Stratix GX devices.

Table 4–36. Stratix GX JTAG Timing Parameters & Values (Part 1 of 2)

Symbol	Parameter	Min (ns)	Max (ns)
t_{JCP}	TCK clock period	100	
t_{JCH}	TCK clock high time	50	
t_{JCL}	TCK clock low time	50	
t_{JPSU}	JTAG port setup time	20	

EP1SGX25DF1020C7 Intel IC FPGA 607 I/O 1020FBGA

Table 4–36. Stratix GX JTAG Timing Parameters & Values (Part 2 of 2)

Symbol	Parameter	Min (ns)	Max (ns)
t_{JPH}	JTAG port hold time	45	
t_{JPCO}	JTAG port clock to output		25
t_{JPZX}	JTAG port high impedance to valid output		25
t_{JPXZ}	JTAG port valid output to high impedance		25
t_{JSSU}	Capture register setup time	20	
t_{JSH}	Capture register hold time	45	
t_{JSCO}	Update register clock to output		35
t_{JSZX}	Update register high impedance to valid output		35
t_{JSXZ}	Update register valid output to high impedance		35

EP1SGX25DF1020C7 Intel IC FPGA 607 I/O 1020FBGA

5. Configuration & Testing

SGX51005-1.0

SignalTap Embedded Logic Analyzer

Stratix® GX devices feature the SignalTap® embedded logic analyzer, which monitors design operation over a period of time through the IEEE Std. 1149.1 (JTAG) circuitry. You can analyze internal logic at speed without bringing internal signals to the I/O pins. This feature is particularly important for advanced packages, such as FineLine BGA® packages, because it can be difficult to add a connection to a pin during the debugging process after a board is designed and manufactured.

Configuration

The logic, circuitry, and interconnects in the Stratix GX architecture are configured with CMOS SRAM elements. Stratix GX devices are reconfigurable and are 100% tested prior to shipment. As a result, you do not have to generate test vectors for fault coverage purposes, and can instead focus on simulation and design verification. In addition, you do not need to manage inventories of different ASIC designs. Stratix GX devices can be configured on the board for the specific functionality required.

Stratix GX devices are configured at system power-up with data stored in an Altera serial configuration device or provided by a system controller. Altera offers in-system programmability (ISP)-capable configuration devices that configure Stratix GX devices via a serial data stream. Stratix GX devices can be configured in under 100 ms using 8-bit parallel data at 100 MHz. The Stratix GX device's optimized interface allows microprocessors to configure it serially or in parallel, and synchronously or asynchronously. The interface also enables microprocessors to treat Stratix GX devices as memory and configure them by writing to a virtual memory location, making reconfiguration easy. After a Stratix GX device has been configured, it can be reconfigured in-circuit by resetting the device and loading new data. Real-time changes can be made during system operation, enabling innovative reconfigurable computing applications.

Operating Modes

The Stratix GX architecture uses SRAM configuration elements that require configuration data to be loaded each time the circuit powers up. The process of physically loading the SRAM data into the device is called configuration. During initialization, which occurs immediately after configuration, the device resets registers, enables I/O pins, and begins to operate as a logic device. The I/O pins are tri-stated during power up,

EP1SGX25DF1020C7 Intel IC FPGA 607 I/O 1020FBGA

and before and during configuration. Together, the configuration and initialization processes are called command mode. Normal device operation is called user mode.

A built-in weak pull-up resistor pulls all user I/O pins to V_{CCIO} before and during device configuration.

SRAM configuration elements allow Stratix GX devices to be reconfigured in-circuit by loading new configuration data into the device. With real-time reconfiguration, the device is forced into command mode with a device pin. The configuration process loads different configuration data, reinitializes the device, and resumes user-mode operation. You can perform in-field upgrades by distributing new configuration files either within the system or remotely.

Configuration Schemes

You can load the configuration data for a Stratix GX device with one of five configuration schemes (see Table 5–1), chosen on the basis of the target application. You can use a configuration device, intelligent controller, or the JTAG port to configure a Stratix GX device. A configuration device can automatically configure a Stratix GX device at system power-up.

You can configure multiple Stratix GX devices in any of five configuration schemes by connecting the configuration enable (nCE) and configuration enable output (nCEO) pins on each device.

Table 5–1. Data Sources for Configuration

Configuration Scheme	Data Source
Configuration device	Enhanced or EPC2 configuration device
Passive serial (PS)	ByteBlasterMV™ or MasterBlaster™ download cable or serial data source
Passive parallel asynchronous (PPA)	Parallel data source
Fast passive parallel	Parallel data source
JTAG	MasterBlaster or ByteBlasterMV download cable or a microprocessor with a Jam or JBC file (.jam or .jbc)

EP1SGX25DF1020C7 Intel IC FPGA 607 I/O 1020FBGA

Partial Reconfiguration

The enhanced PLLs within the Stratix GX device family support partial reconfiguration of their multiply, divide, and time delay settings without reconfiguring the entire device. You can use either serial data from the logic array or regular I/O pins to program the PLL's counter settings in a serial chain. This option provides considerable flexibility for frequency synthesis, allowing real-time variation of the PLL frequency and delay. The rest of the device is functional while reconfiguring the PLL. See the *Stratix GX Architecture* chapter of the *Stratix GX Device Handbook, Volume 1* for more information on Stratix GX PLLs.

Remote Update Configuration Modes

Stratix GX devices also support remote configuration using an Altera enhanced configuration device (for example, EPC16, EPC8, and EPC4 devices) with page mode selection. Factory configuration data is stored in the default page of the configuration device. This is the default configuration which contains the design required to control remote updates and handle or recover from errors. You write the factory configuration once into the flash memory or configuration device. Remote update data can update any of the remaining pages of the configuration device. If there is an error or corruption in a remote update configuration, the configuration device reverts back to the factory configuration information.

There are two remote configuration modes: remote and local configuration. You can use the remote update configuration mode for all three configuration modes: serial, parallel synchronous, and parallel asynchronous. Configuration devices (for example, EPC16 devices) only support serial and parallel synchronous modes. Asynchronous parallel mode allows remote updates when an intelligent host is used to configure the Stratix GX device. This host must support page mode settings similar to an EPC16 device.

Remote Update Mode

When the Stratix GX device is first powered-up in remote update programming mode, it loads the configuration located at page address `000`. The factory configuration should always be located at page address `000`, and should never be remotely updated. The factory configuration contains the required logic to perform the following operations:

- Determine the page address/load location for the next application's configuration data
- Recover from a previous configuration error

EP1SGX25DF1020C7 Intel IC FPGA 607 I/O 1020FBGA

- Receive new configuration data and write it into the configuration device

The factory configuration is the default and takes control if an error occurs while loading the application configuration.

While in the factory configuration, the factory-configuration logic performs the following operations:

- Loads a remote update-control register to determine the page address of the new application configuration
- Determines whether to enable a user watchdog timer for the application configuration
- Determines what the watchdog timer setting should be if it is enabled

The user watchdog timer is a counter that must be continually reset within a specific amount of time in the user mode of an application configuration to ensure that valid configuration occurred during a remote update. Only valid application configurations designed for remote update can reset the user watchdog timer in user mode. If a valid application configuration does not reset the user watchdog timer in a specific amount of time, the timer updates a status register and loads the factory configuration. The user watchdog timer is automatically disabled for factory configurations.

If an error occurs in loading the application configuration, the configuration logic writes a status register to specify the cause of the reconfiguration. Once this occurs, the Stratix GX device automatically loads the factory configuration, which reads the status register and determines the reason for reconfiguration. Based on the reason, the factory configuration takes appropriate steps and writes the remote update control register to specify the next application configuration page to be loaded.

When the Stratix GX device successfully loads the application configuration, it enters into user mode. The Stratix GX device then executes the main application of the user. Intellectual property (IP), such as a Nios® embedded processor, can help the Stratix GX device determine when remote update is coming. The Nios embedded processor or user logic receives incoming data, writes it to the configuration device, and loads the factory configuration. The factory configuration reads the remote update status register and determine the valid application configuration to load. Figure 5–1 shows the Stratix GX remote update. Figure 5–2 shows the transition diagram for remote update mode.

EP1SGX25DF1020C7 Intel IC FPGA 607 I/O 1020FBGA

Figure 5–1. Stratix GX Device Remote Update

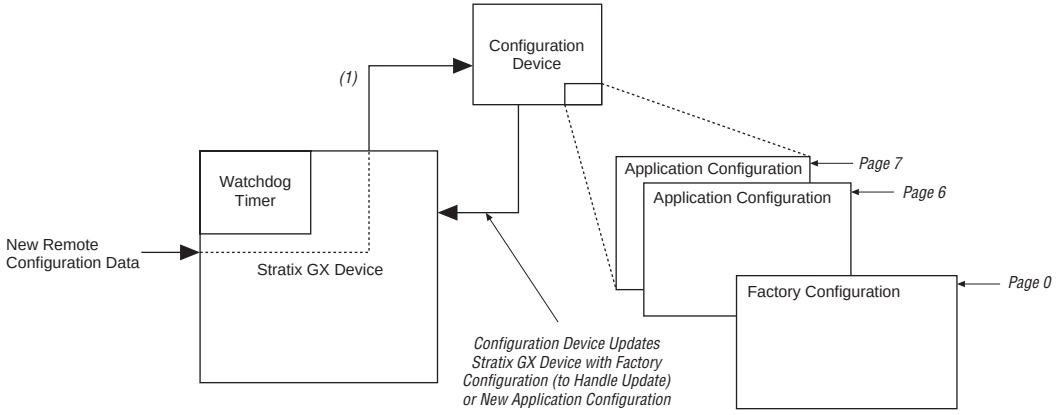

Note to Figure 5–1:

(1) When the Stratix GX device is configured with the factory configuration, it can handle update data from EPC16, EPC8, or EPC4 configuration device pages and point to the next page in the configuration device.

Figure 5–2. Remote Update Transition Diagram *Notes (1), (2)*

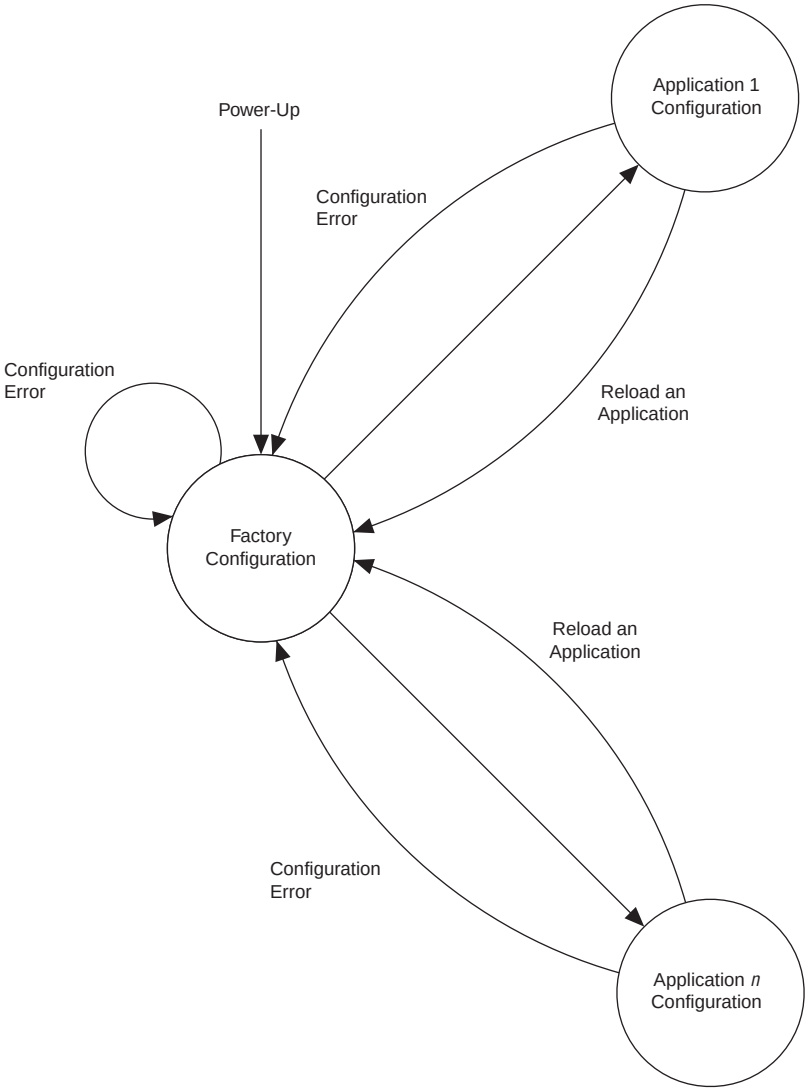

Notes to Figure 5–2:

(1) Remote update of application configuration is controlled by a Nios embedded processor or user logic programmed in the factory or application configurations.

(2) Up to seven pages can be specified allowing up to seven different configuration applications.

Local Update Mode

Local update mode is a simplified version of the remote update. This feature is intended for simple systems that need to load a single application configuration immediately upon power-up without loading the factory configuration first. Local update designs have only one application configuration to load, so it does not require a factory configuration to determine which application configuration to use. Figure 5–3 shows the transition diagram for local update mode.

Figure 5–3. Local Update Transition Diagram

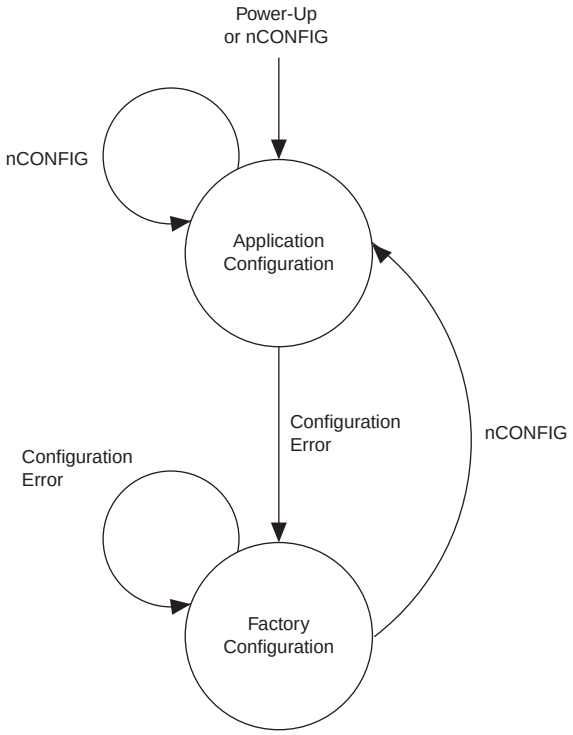

Stratix GX Automated Single Event Upset (SEU) Detection

Stratix GX devices offer on-chip circuitry for automated checking of single event upset (SEU) detection. Some applications that require the device to operate error free at high elevations or in close proximity to earth's North or South Pole require periodic checks to ensure continued data integrity. The error detection cyclic redundancy code (CRC) feature controlled by the **Device & Pin Options** dialog box in the Quartus II software uses a 32-bit CRC circuit to ensure data reliability and is one of the best options for mitigating SEU.

EP1SGX25DF1020C7 Intel IC FPGA 607 I/O 1020FBGA

You can implement the error detection CRC feature with existing circuitry in Stratix GX devices, eliminating the need for external logic. For Stratix GX devices, the CRC is computed by Quartus II and downloaded into the device as a part of the configuration bit stream. The CRC_ERROR pin reports a soft error when configuration SRAM data is corrupted, triggering device reconfiguration.

Custom-Built Circuitry

Dedicated circuitry is built into Stratix GX devices to perform error detection automatically. This error detection circuitry constantly checks for errors in the configuration SRAM cells while the device is in user mode. You can monitor one external pin for the error and use it to trigger a reconfiguration cycle. You can select the desired time between checks by adjusting a built-in clock divider.

Software Interface

In the Quartus II software version 4.1 and later, you can turn on the automated error detection CRC feature in the **Device & Pin Options** dialog box. This dialog box allows you to enable the feature and set the internal frequency of the CRC between 400 kHz to 100 MHz. This controls the rate that the CRC circuitry verifies the internal configuration SRAM bits in the FPGA device.

For more information on CRC, refer to *AN 357: Error Detection Using CRC in Altera FPGA Devices*.

Temperature-Sensing Diode

Stratix GX devices include a diode-connected transistor for use as a temperature sensor in power management. This diode is used with an external digital thermometer device such as a MAX1617A or MAX1619 from MAXIM Integrated Products. These devices steer bias current through the Stratix GX diode, measuring forward voltage and converting this reading to temperature in the form of an 8-bit signed number (7 bits plus sign). The external device's output represents the package temperature of the Stratix GX device and can be used for intelligent power management.

The diode requires two pins (tempdiodep and tempdioden) on the Stratix GX device to connect to the external temperature-sensing device, as shown in Figure 5–4. The temperature-sensing diode is a passive element and therefore can be used before the Stratix GX device is powered.

EP1SGX25DF1020C7 Intel IC FPGA 607 I/O 1020FBGA

Figure 5–4. External Temperature-Sensing Diode

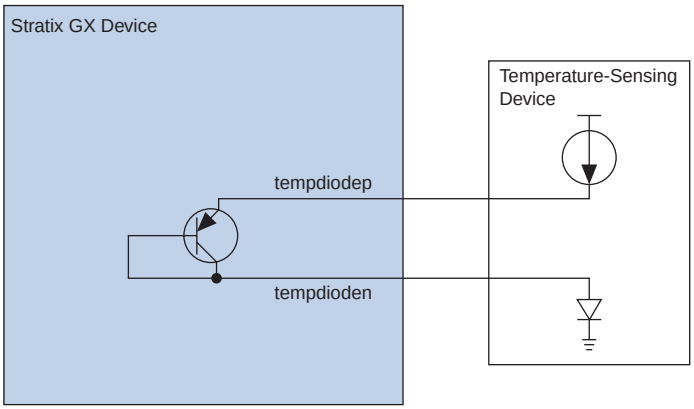

Table 5–2 shows the specifications for bias voltage and current of the Stratix GX temperature-sensing diode.

Table 5–2. Temperature-Sensing Diode Electrical Characteristics

Parameter	Minimum	Typical	Maximum	Units
I_{BIAS} high	80	100	120	µA
I_{BIAS} low	8	10	12	µA
$V_{BP} - V_{BN}$	0.3		0.9	V
V_{BN}		0.7		V
Series resistance			3	W

The temperature-sensing diode works for the entire operating range shown in Figure 5–5.

EP1SGX25DF1020C7 Intel IC FPGA 607 I/O 1020FBGA

Figure 5–5. Temperature Versus Temperature-Sensing Diode Voltage

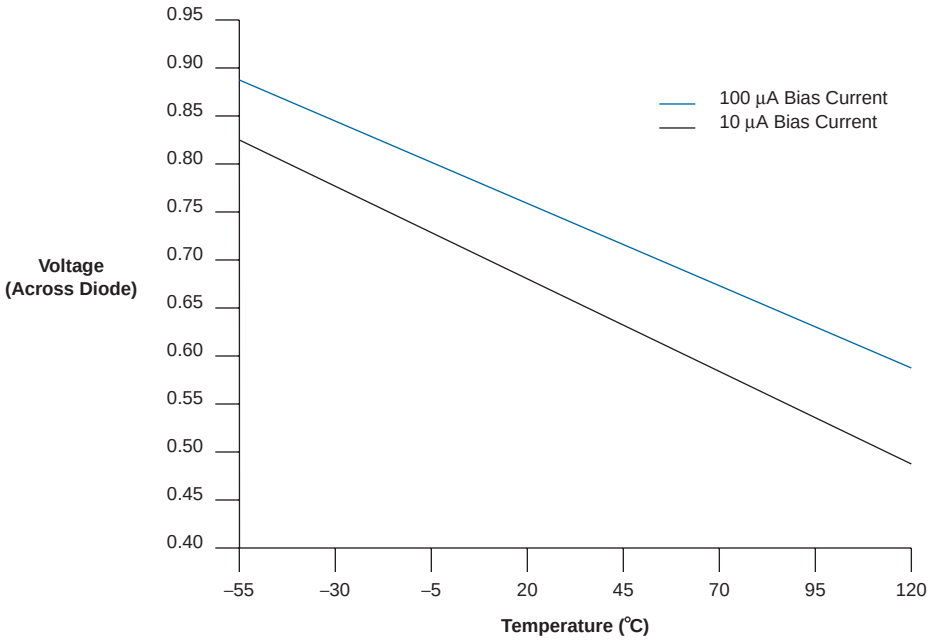

6. DC & Switching Characteristics

SGX51006-1.2

Operating Conditions

Stratix® GX devices are offered in both commercial and industrial grades. However, industrial-grade devices may have limited speed-grade availability.

Tables 6–1 through 6–12 provide information on absolute maximum ratings, recommended operating conditions, DC operating conditions, and transceiver block absolute maximum ratings. Notes for Tables 6–1 through 6–6 immediately follow Table 6–6, notes for Table 6–7 immediately follow that table, and notes for Tables 6–8 through 6–12 immediately follow Table 6–12.

Table 6–1. Stratix GX Device Absolute Maximum Ratings *Notes (1), (2)*

Symbol	Parameter	Conditions	Minimum	Maximum	Unit
V_{CCINT}	Supply voltage	With respect to ground *(3)*	–0.5	2.4	V
V_{CCIO}			–0.5	4.6	V
V_I	DC input voltage		–0.5	4.6	V
I_{OUT}	DC output current, per pin		–25	25	mA
T_{STG}	Storage temperature	No bias	–65	150	° C
T_{AMB}	Ambient temperature	Under bias	–65	135	° C
T_J	Junction temperature	BGA packages under bias		135	° C

Table 6–2. Stratix GX Device Recommended Operating Conditions (Part 1 of 2) *Note (7), (12), (13)*

Symbol	Parameter	Conditions	Minimum	Maximum	Unit
V_{CCINT}	Supply voltage for internal logic and input buffers	*(4)*	1.425	1.575	V
V_{CCIO}	Supply voltage for output buffers, 3.3-V operation	*(4), (5)*	3.00 (3.135)	3.60 (3.465)	V
	Supply voltage for output buffers, 2.5-V operation	*(4)*	2.375	2.625	V
	Supply voltage for output buffers, 1.8-V operation	*(4)*	1.71	1.89	V
	Supply voltage for output buffers, 1.5-V operation	*(4)*	1.4	1.6	V
V_I	Input voltage	*(3), (6)*	–0.5	4.1	V

Table 6–2. Stratix GX Device Recommended Operating Conditions (Part 2 of 2) *Note (7), (12), (13)*

Symbol	Parameter	Conditions	Minimum	Maximum	Unit
V_O	Output voltage		0	V_{CCIO}	V
T_J	Operating junction temperature	For commercial use	0	85	° C
		For industrial use	–40	100	° C

Table 6–3. Stratix GX Device DC Operating Conditions *Note (12)*

Symbol	Parameter	Conditions	Minimum	Typical	Maximum	Unit
I_I	Input pin leakage current	$V_I = V_{CCIOmax}$ to 0 V *(8)*	–10		10	µA
I_{OZ}	Tri-stated I/O pin leakage current	$V_O = V_{CCIOmax}$ to 0 V *(8)*	–10		10	µA
R_{CONF}	Value of I/O pin pull-up resistor before and during configuration	V_{CCIO} = 3.0 V *(9)*	20		50	kΩ
		V_{CCIO} = 2.375 V *(9)*	30		80	kΩ
		V_{CCIO} = 1.71 V *(9)*	60		150	kΩ

Table 6–4. Stratix GX Transceiver Block Absolute Maximum Ratings

Symbol	Parameter	Conditions	Minimum	Maximum	Units
V_{CCA}	Transceiver block supply voltage	Commercial and industrial	–0.5	4.6	V
V_{CCP}	Transceiver block supply voltage	Commercial and industrial	–0.5	2.4	V
V_{CCR}	Transceiver block supply Voltage	Commercial and industrial	–0.5	2.4	V
V_{CCT}	Transceiver block supply voltage	Commercial and industrial	–0.5	2.4	V
V_{CCG}	Transceiver block supply voltage	Commercial and industrial	–0.5	2.4	V
Receiver input voltage	$V_{ICM} \pm V_{ID}$ single / 2	Commercial and industrial		1.675 *(10), (13)*	V
`refclkb` input voltage	$V_{ICM} \pm V_{ID}$ single / 2	Commercial and industrial		1.675 *(10), (13)*	V

Table 6–5. Stratix GX Transceiver Block Operating Conditions

Symbol	Parameter	Conditions	Minimum	Typical	Maximum	Units
V_{CCA}	Transceiver block supply voltage	Commercial and industrial	3.135	3.3	3.465	V
V_{CCP}	Transceiver block supply voltage	Commercial and industrial	1.425	1.5	1.575	V
V_{CCR}	Transceiver block supply voltage	Commercial and industrial	1.425	1.5	1.575	V
V_{CCT}	Transceiver block supply voltage	Commercial and industrial	1.425	1.5	1.575	V
V_{CCG}	Transceiver block supply voltage	Commercial and industrial	1.425	1.5	1.575	V
V_{ID} (differential p-p)	Receiver input differential voltage swing	Commercial and industrial	170		2,000	mV
	`refclkb` input differential voltage swing	Commercial and industrial	400		2,000	mV
V_{ICM}	Receiver input common mode voltage	Commercial and industrial	1,025	1,100	1,175	mV
V_{OD} (differential p-p)	Transmitter output differential voltage	Commercial and industrial	350		1,600	mV
V_{OCM}	Transmitter output common mode voltage	Commercial and industrial		750		mV
R_{REF} *(11)*	Reference resistor	Commercial and industrial	2K –1%	2K	2K +1%	Ω

Table 6–6. Stratix GX Transceiver Block On-Chip Termination (Part 1 of 2)

Symbol	Parameter	Conditions	Min	Typ	Max	Units
Rx	Receiver termination	Commercial and industrial, 100-Ω setting	103	108	113	Ω
		Commercial and industrial, 120-Ω setting	120	128	134	Ω
		Commercial and industrial, 150-Ω setting	149	158	167	Ω
Tx	Transmitter termination	Commercial and industrial, 100-Ω setting	103	108	113	Ω
		Commercial and industrial, 120-Ω setting	120	128	134	Ω
		Commercial and industrial, 150-Ω setting	149	158	167	Ω

Table 6–6. Stratix GX Transceiver Block On-Chip Termination (Part 2 of 2)

Symbol	Parameter	Conditions	Min	Typ	Max	Units
Refclkb	Dedicated transceiver clock termination	Commercial and industrial, 100-Ω setting	103	108	113	Ω
		Commercial and industrial, 120-Ω setting	120	128	134	Ω
		Commercial and industrial, 150-Ω setting	149	158	167	Ω

Notes to Tables 6–1 through 6–6:

(1) See the *Operating Requirements for Altera Devices Data Sheet*.
(2) Conditions beyond those listed in Table 6–1 may cause permanent damage to a device. Additionally, device operation at the absolute maximum ratings for extended periods of time may have adverse affects on the device.
(3) Minimum DC input is –0.5 V. During transitions, the inputs may undershoot to –2.0 V or overshoot to 4.6 V for input currents less than 100 mA and periods shorter than 20 ns. (The information in this note does not include the transceiver pins. See note 13 for information about the transient voltage on the transceiver pins.)
(4) Maximum V_{CC} rise time is 100 ms, and V_{CC} must rise monotonically.
(5) V_{CCIO} maximum and minimum conditions for LVPECL, LVDS, and 3.3-V PCML are shown in parentheses.
(6) All pins, including dedicated inputs, clock, I/O, and JTAG pins, may be driven before V_{CCINT} and V_{CCIO} are powered.
(7) Typical values are for T_A = 25° C, V_{CCINT} = 1.5 V, and V_{CCIO} = 1.5 V, 1.8 V, 2.5 V, and 3.3 V.
(8) This value is specified for normal device operation. The value may vary during power-up. This applies for all V_{CCIO} settings (3.3, 2.5, 1.8, and 1.5 V).
(9) Pin pull-up resistance values decrease if an external source drives the pin higher than V_{CCIO}.
(10) The device can tolerate prolonged operation at this absolute maximum, as long as the maximum specification is not violated.
(11) Each usable quad requires its own R_{REF} resistor path to ground. For example, the "D" in the EP1SGX25DC1020 device code means it has two usable quad so two different R_{REF} pins must be connected to a R_{REF} resistor each to ground. The DC signal on the R_{REF} pin must be as clean as possible. Ensure that no noise is coupled to this pin.
(12) The Stratix GX device's recommended operating conditions do not include the transceiver. Refer to Tables 6–4 to 6–7.
(13) Minimum DC input to the transceiver pins is –0.5 V. During transitions, the transceiver pins may undershoot to –0.5 V or overshoot to 3.5 V for input currents less than 100 mA and periods shorter than 20 ns.

Table 6–7. Stratix GX Transceiver Block AC Specification (Part 1 of 7)

Symbol / Description	Conditions	-5 Commercial Speed Grade (1)			-6 Commercial & Industrial Speed Grade (1)			-7 Commercial & Industrial Speed Grade (1)			Unit
		Min	Typ	Max	Min	Typ	Max	Min	Typ	Max	
Power per quadrant (PCS + PMA)	3.125 Gbps, 400-mV V_{od} 0 pre-emphasis		450			450					mW

Table 6–7. Stratix GX Transceiver Block AC Specification (Part 2 of 7)

Symbol / Description	Conditions	-5 Commercial Speed Grade *(1)*			-6 Commercial & Industrial Speed Grade *(1)*			-7 Commercial & Industrial Speed Grade *(1)*			Unit
		Min	Typ	Max	Min	Typ	Max	Min	Typ	Max	
Reference Clock											
Jitter tolerance (peak-to-peak)	Jitter components <20 MHz			20			20			20	ps
	Wideband			50			50			50	ps
Reference input clock frequency	Dedicated `refclkb` pins	25		650	25		650	25		312.5	MHz
	PLD clock resources	25		325	25		325	25		156.25	MHz
Receiver											
Serial data rate (general)	Commercial / industrial	614		3,187.5	614		3,187.5	614		2,500	Mbps
Serial data rate (8B/10B encoded)	Commercial / industrial	500		3,187.5	500		3,187.5	500		2,500	Mbps
Parallel transceiver/ logic array interface speed		20		398.4	20		375	20		312.5	MHz
Rate matching frequency tolerance	XAUI mode only			±100			±100			±100	ppm
8B/10B Custom Receiver Jitter Tolerance using Encoded CJPAT *Note (2)*											
Deterministic jitter	500 Mbps			0.45			0.45			0.45	UI
Total jitter	500 Mbps			0.71			0.71			0.71	UI
Fibre Channel Receiver Jitter Tolerance using 8B/10B Encoded CJTPAT *Note (2)*											
Deterministic jitter	1.0625 Gbps			0.37			0.37			0.37	UI
Total jitter	1.0625 Gbps			0.68			0.68			0.68	UI

Table 6–7. Stratix GX Transceiver Block AC Specification (Part 3 of 7)

Symbol / Description	Conditions	-5 Commercial Speed Grade *(1)*			-6 Commercial & Industrial Speed Grade *(1)*			-7 Commercial & Industrial Speed Grade *(1)*			Unit
		Min	Typ	Max	Min	Typ	Max	Min	Typ	Max	
Sinusoidal jitter	f = 42.5 kHz at 1.0625 Gbps			1.5			1.5			1.5	UI
	f = 637 kHz at 1.0625 Gbps			0.1			0.1			0.1	UI
Deterministic jitter	2.125 Gbps			0.33			0.33			0.33	UI
Total jitter	2.125 Gbps			0.62			0.62			0.62	UI
Sinusoidal jitter	f = 85 kHz at 2.125 Gbps			1.5			1.5			1.5	UI
	f = 1,274 kHz at 2.125 Gbps			0.1			0.1			0.1	UI
Serial Rapid I/O Receiver Jitter Tolerance using 8B/10B Encoded CJPAT *Note (2)*											
Deterministic jitter	1.25 Gbps			0.45			0.45			0.45	UI
Total jitter	1.25 Gbps			0.71			0.71			0.71	UI
Deterministic jitter	2.5 Gbps			0.41			0.41			0.41	UI
Total jitter	2.5 Gbps			0.65			0.65			0.65	UI
Deterministic jitter	3.125 Gbps			0.36			0.36			N/A	UI
Total jitter	3.125 Gbps			0.60			0.60			N/A	UI
SONET Receiver Jitter Tolerance using PRBS23 *Note (2)*											
Sinusoidal jitter	f = 6 kHz at 2.48832 Gbps			1.5			1.5			1.5	UI
	f = 1 MHz at 2.48832 Gbps			0.15			0.15			0.15	UI
XAUI Receiver Jitter Tolerance using 8B/10B Encoded CJPAT *Note (2)*											
Deterministic jitter	3.125 Gbps			0.37			0.37			N/A	UI
Total jitter	3.125 Gbps			0.65			0.65			N/A	UI

Table 6–7. Stratix GX Transceiver Block AC Specification (Part 4 of 7)

Symbol / Description	Conditions	-5 Commercial Speed Grade *(1)*			-6 Commercial & Industrial Speed Grade *(1)*			-7 Commercial & Industrial Speed Grade *(1)*			Unit
		Min	Typ	Max	Min	Typ	Max	Min	Typ	Max	
Sinusoidal jitter	f = 22.1 kHz at 3.125 Gbps			8.5			8.5			N/A	
	f = 1.875 MHz at 3.125 Gbps			0.1			0.1			N/A	
	f = 20 MHz at 3.125 Gbps			0.1			0.1			N/A	
BER *(12)*				10^{-12}			10^{-12}			10^{-12}	
Receive latency *(4)*	Single width	7		32	7		32	7		32	*(3)*
	Double width	5		19	5		19	5		19	*(3)*
Channel to channel bit skew tolerance *(5)*, *(6)*	XAUI mode / inter-quadrant only			40			40			N/A	UI *(7)*
Run-length	*(8)*			80			80			80	UI
Receive return loss (differential)	100 MHz to 2.5 Ghz			–10			–10			–10	dB
Receive return loss (common mode)	100 MHz to 2.5 Ghz			–6			–6			–6	dB
Transmitter											
Serial data rate	Commercial / industrial	500		3,187.5	500		3,187.5	500		2,500	Mbps
Parallel transceiver/ core interface speed		20		398.4	20		375	20		312.5	MHz
8B/10B Custom Transmitter Jitter using Encoded CRPAT *Note (9)*											
Deterministic jitter	500 Mbps Pre-emphasis = 1 V_{OD} = 1,400 mV			0.11			0.11			0.11	UI
Total jitter				0.18			0.18			0.18	UI

Table 6–7. Stratix GX Transceiver Block AC Specification (Part 5 of 7)

Symbol / Description	Conditions	-5 Commercial Speed Grade (1)			-6 Commercial & Industrial Speed Grade (1)			-7 Commercial & Industrial Speed Grade (1)			Unit
		Min	Typ	Max	Min	Typ	Max	Min	Typ	Max	
Fibre Channel Transmitter Jitter using 8B/10B Encoded CRPAT *Note (9)*											
Deterministic jitter	1.0625 Gbps Pre-emphasis = 0 V_{OD} = 1,200 mV			0.09			0.09			0.09	UI
Total jitter				0.17			0.17			0.17	UI
Deterministic jitter	2.125 Gbps Pre-emphasis= 1 V_{OD} = 1,200 mV			0.16			0.16			0.16	UI
Total jitter				0.33			0.33			0.33	UI
Serial Rapid I/O Short Run Transmitter Jitter using 8B/10B Encoded CRPAT *Note (9)*											
Deterministic jitter	1.25 Gbps Pre-emphasis = 1 V_{OD} = 1,600 mV			0.09			0.09			0.09	UI
Total jitter				0.17			0.17			0.17	UI
Deterministic jitter	2.5 Gbps Pre-emphasis = 1 V_{OD} = 800 mV			0.15			0.15			0.15	UI
Total jitter				0.32			0.32			0.32	UI
Deterministic jitter	3.125 Gbps Pre-emphasis = 1 V_{OD} = 800 mV			0.15			0.15			N/A	UI
Total jitter				0.32			0.32			N/A	UI
Serial Rapid I/O Long Run Transmitter Jitter using 8B/10B Encoded CRPAT *Note (9)*											
Deterministic jitter	1.25 Gbps Pre-emphasis = 1 V_{OD} = 1,600 mV			0.09			0.09			0.09	UI
Total jitter				0.17			0.17			0.17	UI
Deterministic jitter	2.5 Gbps Pre-emphasis = 2 V_{OD} = 1,400 mV			0.18			0.18			0.18	UI
Total jitter				0.35			0.35			0.35	UI
Deterministic jitter	3.125 Gbps Pre-emphasis = 2 V_{OD} = 1,400 mV			0.20			0.20			N/A	UI
Total jitter				0.37			0.37			N/A	UI
SONET Transmitter Jitter PRBS23 *Note (9)*											
Total jitter	2.48832 Gbps Pre-emphasis = 1 V_{OD} = 800 mV			0.20			0.20			0.20	UI

Table 6–7. Stratix GX Transceiver Block AC Specification (Part 6 of 7)

Symbol / Description	Conditions	-5 Commercial Speed Grade *(1)*			-6 Commercial & Industrial Speed Grade *(1)*			-7 Commercial & Industrial Speed Grade *(1)*			Unit
		Min	Typ	Max	Min	Typ	Max	Min	Typ	Max	
XAUI Transmitter Jitter using 8B/10B Encoded CJPAT *Note (9)*											
Deterministic jitter	3.125 Gbps Pre-emphasis = 0 V_{OD} = 1,200 mV			0.15			0.15			N/A	UI
Total jitter				0.32			0.32			N/A	UI
Jitter transfer bandwidth *(10)*	Low bandwidth setting at 3.125 Gbps		3			3				N/A	MHz
	High bandwidth setting at 3.125 Gbps		4.7			4.7				N/A	MHz
	Low bandwidth setting at 2.5 Gbps		3.2			3.2				3.2	MHz
	High bandwidth setting at 2.5 Gbps		4.3			4.3				4.3	MHz
Output t_{RISE}	20% to 80%	60		130	60		130	60		130	ps
Output t_{FALL}	80% to 20%	60		130	60		130	60		130	ps
Transmit latency *(11)*	Single width	3		8	3		8	3		8	*(3)*
	Double width	3		7	3		7	3		7	*(3)*
Intra differential pair skew				10			10			10	ps
Channel to channel skew	Within a single quadrant			50			50			50	ps

Table 6–7. Stratix GX Transceiver Block AC Specification (Part 7 of 7)

Symbol / Description	Conditions	-5 Commercial Speed Grade (1)			-6 Commercial & Industrial Speed Grade (1)			-7 Commercial & Industrial Speed Grade (1)			Unit
		Min	Typ	Max	Min	Typ	Max	Min	Typ	Max	
Output return loss	100 MHz to 2.5 GHz	–10			–10			–10			dB

Notes to Table 6–7:

(1) All numbers for the -6 and -7 speed grades are for both commercial and industrial unless specified otherwise in the Conditions column. Speed grade -5 is available only for commercial specifications.
(2) Not all V_{ID} and equalizer values will get the same results. The condition for the specification was that the V_{ID} before jitter was added is 1,000 mV and the equalizer was set to the maximum condition of 111 (equalizer control setting = 4 in the MegaWizard Plug-In Manager).
(3) Number of parallel clocks.
(4) Receive latency delay from serial receiver indata to parallel receiver data.
(5) Per IEEE Standard 802.3ae @ 3.125 for –5 and –6.
(6) The specification is for channel aligner tolerance.
(7) UI = Unit Interval.
(8) Run-length conditions are true for all data rates, but the average transition density must be enough to keep the receiver phase aligned and the overall data must be DC balanced.
(9) Not all combinations of V_{OD} and pre-emphasis will get the same results.
(10) The numbers are for 3.125-Gbps data rate for –5 and –6 devices and 2.5 Gbps for –7 devices.
(11) Transmitter latency delay from parallel transceiver data to serial transceiver out data.
(12) The receiver operates with a BER of better than 10^{-12} in the presence of an input signal as defined in the XAUI driver template for 3.125 Gbps and in the PCI Exp transmitter eye mask for 2.5 Gbps.

Table 6–8. LVTTL Specifications

Symbol	Parameter	Conditions	Minimum	Maximum	Units
V_{CCIO}	Output supply voltage		3.0	3.6	V
V_{IH}	High-level input voltage		1.7	4.1	V
V_{IL}	Low-level input voltage		–0.5	0.7	V
V_{OH}	High-level output voltage	I_{OH} = –4 to –24 mA (1)	2.4		V
V_{OL}	Low-level output voltage	I_{OL} = 4 to 24 mA (1)		0.45	V

Table 6–9. LVCMOS Specifications

Symbol	Parameter	Conditions	Minimum	Maximum	Units
V_{CCIO}	Output supply voltage		3.0	3.6	V
V_{IH}	High-level input voltage		1.7	4.1	V
V_{IL}	Low-level input voltage		–0.5	0.7	V

Table 6–9. LVCMOS Specifications

Symbol	Parameter	Conditions	Minimum	Maximum	Units
V_{OH}	High-level output voltage	V_{CCIO} = 3.0, I_{OH} = –0.1 mA	V_{CCIO} – 0.2		V
V_{OL}	Low-level output voltage	V_{CCIO} = 3.0, I_{OL} = 0.1 mA		0.2	V

Table 6–10. 2.5-V I/O Specifications *Note (1)*

Symbol	Parameter	Conditions	Minimum	Maximum	Units
V_{CCIO}	Output supply voltage		2.375	2.625	V
V_{IH}	High-level input voltage		1.7	4.1	V
V_{IL}	Low-level input voltage		–0.5	0.7	V
V_{OH}	High-level output voltage	I_{OH} = –0.1 mA	2.1		V
		I_{OH} = –1 mA	2.0		V
		I_{OH} = –2 to –16 mA *(1)*	1.7		V
V_{OL}	Low-level output voltage	I_{OL} = 0.1 mA		0.2	V
		I_{OH} = 1 mA		0.4	V
		I_{OH} = 2 to 16 mA *(1)*		0.7	V

Table 6–11. 1.8-V I/O Specifications

Symbol	Parameter	Conditions	Minimum	Maximum	Units
V_{CCIO}	Output supply voltage		1.65	1.95	V
V_{IH}	High-level input voltage		0.65 × V_{CCIO}	2.25	V
V_{IL}	Low-level input voltage		–0.3	0.35 × V_{CCIO}	V
V_{OH}	High-level output voltage	I_{OH} = –2 to –8 mA *(1)*	V_{CCIO} – 0.45		V
V_{OL}	Low-level output voltage	I_{OL} = 2 to 8 mA *(1)*		0.45	V

Table 6–12. 1.5-V I/O Specifications (Part 1 of 2)

Symbol	Parameter	Conditions	Minimum	Maximum	Units
V_{CCIO}	Output supply voltage		1.4	1.6	V
V_{IH}	High-level input voltage		0.65 × V_{CCIO}	V_{CCIO} + 0.3	V
V_{IL}	Low-level input voltage		–0.3	0.35 × V_{CCIO}	V
V_{OH}	High-level output voltage	I_{OH} = –2 mA *(1)*	0.75 × V_{CCIO}		V

EP1SGX25DF1020C7 Intel IC FPGA 607 I/O 1020FBGA

Table 6–12. 1.5-V I/O Specifications (Part 2 of 2)

Symbol	Parameter	Conditions	Minimum	Maximum	Units
V_{OL}	Low-level output voltage	I_{OL} = 2 mA *(1)*		0.25 × V_{CCIO}	V

Note to Tables 6–8 through 6–12:

(1) Drive strength is programmable according to values in found in the *Stratix GX Architecture* chapter of the *Stratix GX Device Handbook, Volume 1*.

Figures 6–1 through 6–3 show receiver input and transmitter output waveforms, respectively, for all differential I/O standards (LVDS, 3.3-V PCML, LVPECL, and HyperTransport technology).

Figure 6–1. Receiver Input Waveforms for Differential I/O Standards

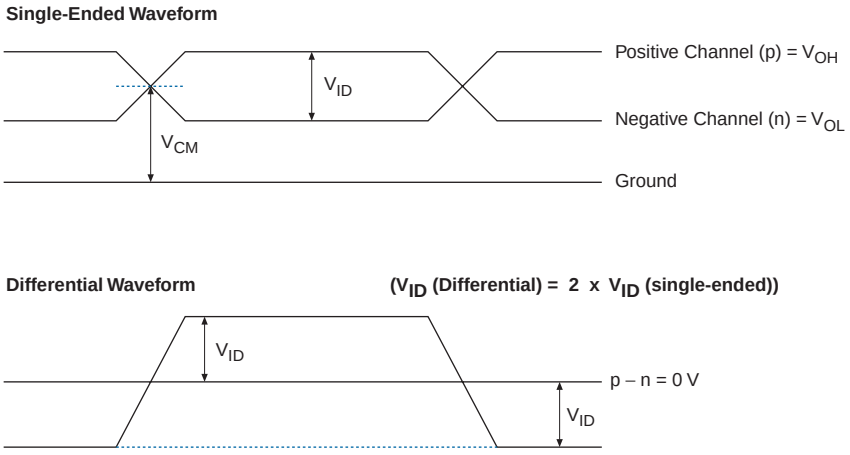

Figure 6–2. Receiver Input Waveform Example with Values

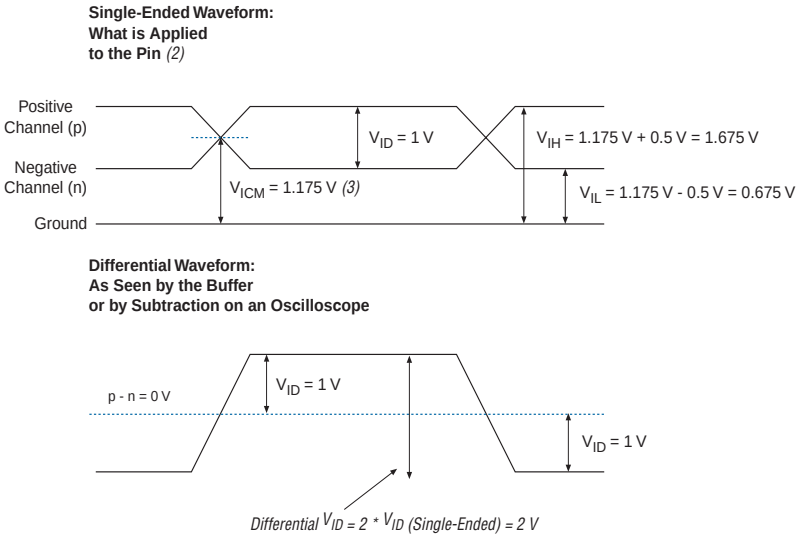

Notes to Figure 6–2:

(1) The values in this figure are for example only.

(2) These values must meet the voltages specified in the section "Operating Conditions" on page 6–1.

(3) If internal termination is used, the common mode is generated after the pins.

Figure 6–3. Transmitter Output Waveforms for Differential I/O Standards

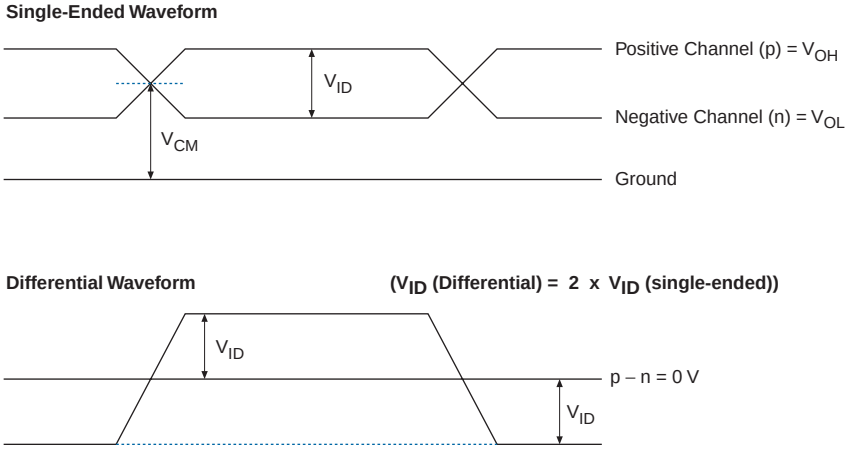

Tables 6–13 through 6–33 provide information about specifications and bus hold parameters for 1.5-V Stratix GX devices. Notes for Tables 6–14 through 6–33 immediately follow Table 6–33.

Table 6–13. 3.3-V LVDS I/O Specifications

Symbol	Parameter	Conditions	Minimum	Typical	Maximum	Units
V_{CCIO}	I/O supply voltage		3.135	3.3	3.465	V
V_{ID} *(1)*	Input differential voltage swing (single-ended)	0.1 V < V_{CM} < 1.1 V *W* = 1 through 10	300		1,000	mV
		1.1 V < V_{CM} < 1.6 V *W* = 1	200		1,000	mV
		1.1 V < V_{CM} < 1.6 V *W* = 2 through 10	100		1,000	mV
		1.6 V < V_{CM} < 1.8 V *W* = 1 through 10	300		1,000	mV
V_{ICM} *(1)*	Input common-mode voltage	LVDS 0.3 V < V_{ID} < 1.0 V *W* = 1 through 10	100		1,100	mV
		LVDS 0.3 V < V_{ID} < 1.0 V *W* = 1 through 10	1,600		1,800	mV
		LVDS 0.2 V < V_{ID} < 1.0 V *W* = 1	1,100		1,600	mV
		LVDS 0.1 V < V_{ID} < 1.0 V *W* = 2 through 10	1,100		1,600	mV
V_{OD}	Differential output voltage (single ended)	R_L = 100 Ω	250	375	550	mV
ΔV_{OD}	Change in V_{OD} between high and low	R_L = 100 Ω			50	mV
V_{OCM}	Output common-mode voltage	R_L = 100 Ω	1,125	1,200	1,375	mV
ΔV_{OCM}	Change in V_{OCM} between high and low	R_L = 100 Ω			50	mV
R_L	Receiver differential input resistor, external		90	100	110	Ω

Note to Table 6–13:
(1) For up to 1 Gbps in DPA mode and 840 Mbps in non-DPA mode

EP1SGX25DF1020C7 Intel IC FPGA 607 I/O 1020FBGA

Table 6–14. 3.3-V PCML Specifications

Symbol	Parameter	Conditions	Minimum	Typical	Maximum	Units
V_{CCIO}	I/O supply voltage		3.135	3.3	3.465	V
V_{ID}	Input differential voltage swing (single-ended)		300		600	mV
V_{ICM}	Input common mode voltage		1.5		3.465	V
V_{OD}	Output differential voltage (single-ended)		300	370	500	mV
ΔV_{OD}	Change in V_{OD} between high and low				50	mV
V_{OCM}	Output common mode voltage		2.5	2.85	3.3	V
ΔV_{OCM}	Change in V_{OCM} between high and low				50	mV
V_T	Output termination voltage			V_{CCIO}		V
R_1	Output external pull-up resistors		45	50	55	Ω
R_2	Output external pull-up resistors		45	50	55	Ω

Table 6–15. LVPECL Specifications

Symbol	Parameter	Conditions	Minimum	Typical	Maximum	Units
V_{CCIO}	I/O supply voltage		3.135	3.3	3.465	V
V_{ID}	Input differential voltage swing (single-ended)		300		1,000	mV
V_{ICM}	Input common mode voltage		1		2	V
V_{OD}	Differential output voltage (single ended)	R_L = 100 Ω	525	700	970	mV
V_{OCM}	Output common mode voltage	R_L = 100 Ω	1.5	1.7	1.9	V
R_L	Receiver differential input resistor, external		90	100	110	Ω

EP1SGX25DF1020C7 Intel IC FPGA 607 I/O 1020FBGA

Table 6–16. HyperTransport Specifications

Symbol	Parameter	Conditions	Minimum	Typical	Maximum	Units
V_{CCIO}	I/O supply voltage		2.375	2.5	2.625	V
V_{OD}	Differential output voltage (single ended)	R_L = 100 Ω	380	485	820	mV
ΔV_{OD}	Change in between high and low	R_L = 100 Ω			50	mV
V_{OCM}	Output common mode voltage	R_L = 100 Ω	440	650	780	mV
ΔV_{OCM}	Change in between high and low	R_L = 100 Ω			50	mV
V_{ID}	Differential input voltage swing (single-ended)		300		900	mV
V_{ICM}	Input common mode voltage		300		900	mV
R_L	Receiver differential input resistor, external		90	100	110	Ω

Table 6–17. 3.3-V PCI Specifications

Symbol	Parameter	Conditions	Minimum	Typical	Maximum	Units
V_{CCIO}	Output supply voltage		3.0	3.3	3.6	V
V_{IH}	High-level input voltage		0.5 × V_{CCIO}		V_{CCIO} + 0.5	V
V_{IL}	Low-level input voltage		–0.5		0.3 × V_{CCIO}	V
V_{OH}	High-level output voltage	I_{OUT} = –500 µA	0.9 × V_{CCIO}			V
V_{OL}	Low-level output voltage	I_{OUT} = 1,500 µA			0.1 × V_{CCIO}	V

Table 6–18. PCI-X Specifications (Part 1 of 2)

Symbol	Parameter	Conditions	Minimum	Typical	Maximum	Units
V_{CCIO}	Output supply voltage		3.0		3.6	V
V_{IH}	High-level input voltage		0.5 × V_{CCIO}		V_{CCIO} + 0.5	V
V_{IL}	Low-level input voltage		–0.5		0.35 × V_{CCIO}	V

EP1SGX25DF1020C7 Intel IC FPGA 607 I/O 1020FBGA

Table 6–18. PCI-X Specifications (Part 2 of 2)

Symbol	Parameter	Conditions	Minimum	Typical	Maximum	Units
V_{IPU}	Input pull-up voltage		0.7 × V_{CCIO}			V
V_{OH}	High-level output voltage	I_{OUT} = –500 µA	0.9 × V_{CCIO}			V
V_{OL}	Low-level output voltage	I_{OUT} = 1,500 µA			0.1 × V_{CCIO}	V

Table 6–19. GTL+ I/O Specifications

Symbol	Parameter	Conditions	Minimum	Typical	Maximum	Units
V_{TT}	Termination voltage		1.35	1.5	1.65	V
V_{REF}	Reference voltage		0.88	1.0	1.12	V
V_{IH}	High-level input voltage		V_{REF} + 0.1			V
V_{IL}	Low-level input voltage				V_{REF} – 0.1	V
V_{OL}	Low-level output voltage	I_{OL} = 36 mA *(1)*			0.65	V

Table 6–20. GTL I/O Specifications

Symbol	Parameter	Conditions	Minimum	Typical	Maximum	Units
V_{TT}	Termination voltage		1.14	1.2	1.26	V
V_{REF}	Reference voltage		0.74	0.8	0.86	V
V_{IH}	High-level input voltage		V_{REF} + 0.05			V
V_{IL}	Low-level input voltage				V_{REF} – 0.05	V
V_{OL}	Low-level output voltage	I_{OL} = 40 mA *(1)*			0.4	V

Table 6–21. SSTL-18 Class I Specifications (Part 1 of 2)

Symbol	Parameter	Conditions	Minimum	Typical	Maximum	Units
V_{CCIO}	Output supply voltage		1.65	1.8	1.95	V
V_{REF}	Reference voltage		0.8	0.9	1.0	V
V_{TT}	Termination voltage		V_{REF} – 0.04	V_{REF}	V_{REF} + 0.04	V
$V_{IH(DC)}$	High-level DC input voltage		V_{REF} + 0.125			V

Table 6–21. SSTL-18 Class I Specifications (Part 2 of 2)

Symbol	Parameter	Conditions	Minimum	Typical	Maximum	Units
$V_{IL(DC)}$	Low-level DC input voltage				V_{REF} – 0.125	V
$V_{IH(AC)}$	High-level AC input voltage		V_{REF} + 0.275			V
$V_{IL(AC)}$	Low-level AC input voltage				V_{REF} – 0.275	V
V_{OH}	High-level output voltage	I_{OH} = –6.7 mA *(1)*	V_{TT} + 0.475			V
V_{OL}	Low-level output voltage	I_{OL} = 6.7 mA *(1)*			V_{TT} – 0.475	V

Table 6–22. SSTL-18 Class II Specifications

Symbol	Parameter	Conditions	Minimum	Typical	Maximum	Units
V_{CCIO}	Output supply voltage		1.65	1.8	1.95	V
V_{REF}	Reference voltage		0.8	0.9	1.0	V
V_{TT}	Termination voltage		V_{REF} – 0.04	V_{REF}	V_{REF} + 0.04	V
$V_{IH(DC)}$	High-level DC input voltage		V_{REF} + 0.125			V
$V_{IL(DC)}$	Low-level DC input voltage				V_{REF} – 0.125	V
$V_{IH(AC)}$	High-level AC input voltage		V_{REF} + 0.275			V
$V_{IL(AC)}$	Low-level AC input voltage				V_{REF} – 0.275	V
V_{OH}	High-level output voltage	I_{OH} = –13.4 mA *(1)*	V_{TT} + 0.630			V
V_{OL}	Low-level output voltage	I_{OL} = 13.4 mA *(1)*			V_{TT} – 0.630	V

Table 6–23. SSTL-2 Class I Specifications (Part 1 of 2)

Symbol	Parameter	Conditions	Minimum	Typical	Maximum	Units
V_{CCIO}	Output supply voltage		2.375	2.5	2.625	V
V_{TT}	Termination voltage		V_{REF} – 0.04	V_{REF}	V_{REF} + 0.04	V
V_{REF}	Reference voltage		1.15	1.25	1.35	V
V_{IH}	High-level input voltage		V_{REF} + 0.18		3.0	V
V_{IL}	Low-level input voltage		–0.3		V_{REF} – 0.18	V

EP1SGX25DF1020C7 Intel IC FPGA 607 I/O 1020FBGA

Table 6–23. SSTL-2 Class I Specifications (Part 2 of 2)

Symbol	Parameter	Conditions	Minimum	Typical	Maximum	Units
V_{OH}	High-level output voltage	I_{OH} = –8.1 mA *(1)*	V_{TT} + 0.57			V
V_{OL}	Low-level output voltage	I_{OL} = 8.1 mA *(1)*			V_{TT} – 0.57	V

Table 6–24. SSTL-2 Class II Specifications

Symbol	Parameter	Conditions	Minimum	Typical	Maximum	Units
V_{CCIO}	Output supply voltage		2.3	2.5	2.7	V
V_{TT}	Termination voltage		V_{REF} – 0.04	V_{REF}	V_{REF} + 0.04	V
V_{REF}	Reference voltage		1.15	1.25	1.35	V
V_{IH}	High-level input voltage		V_{REF} + 0.18		V_{CCIO} + 0.3	V
V_{IL}	Low-level input voltage		–0.3		V_{REF} – 0.18	V
V_{OH}	High-level output voltage	I_{OH} = –16.4 mA *(1)*	V_{TT} + 0.76			V
V_{OL}	Low-level output voltage	I_{OL} = 16.4 mA *(1)*			V_{TT} – 0.76	V

Table 6–25. SSTL-3 Class I Specifications

Symbol	Parameter	Conditions	Minimum	Typical	Maximum	Units
V_{CCIO}	Output supply voltage		3.0	3.3	3.6	V
V_{TT}	Termination voltage		V_{REF} – 0.05	V_{REF}	V_{REF} + 0.05	V
V_{REF}	Reference voltage		1.3	1.5	1.7	V
V_{IH}	High-level input voltage		V_{REF} + 0.2		V_{CCIO} + 0.3	V
V_{IL}	Low-level input voltage		–0.3		V_{REF} – 0.2	V
V_{OH}	High-level output voltage	I_{OH} = –8 mA *(1)*	V_{TT} + 0.6			V
V_{OL}	Low-level output voltage	I_{OL} = 8 mA *(1)*			V_{TT} – 0.6	V

Table 6–26. SSTL-3 Class II Specifications (Part 1 of 2)

Symbol	Parameter	Conditions	Minimum	Typical	Maximum	Units
V_{CCIO}	Output supply voltage		3.0	3.3	3.6	V
V_{TT}	Termination voltage		V_{REF} – 0.05	V_{REF}	V_{REF} + 0.05	V
V_{REF}	Reference voltage		1.3	1.5	1.7	V
V_{IH}	High-level input voltage		V_{REF} + 0.2		V_{CCIO} + 0.3	V

Table 6–26. SSTL-3 Class II Specifications (Part 2 of 2)

Symbol	Parameter	Conditions	Minimum	Typical	Maximum	Units
V_{IL}	Low-level input voltage		–0.3		V_{REF} – 0.2	V
V_{OH}	High-level output voltage	I_{OH} = –16 mA *(1)*	V_{TT} + 0.8			V
V_{OL}	Low-level output voltage	I_{OL} = 16 mA *(1)*			V_{TT} – 0.8	V

Table 6–27. 3.3-V AGP 2× Specifications

Symbol	Parameter	Conditions	Minimum	Typical	Maximum	Units
V_{CCIO}	Output supply voltage		3.15	3.3	3.45	V
V_{REF}	Reference voltage		0.39 × V_{CCIO}		0.41 × V_{CCIO}	V
V_{IH}	High-level input voltage *(2)*		0.5 × V_{CCIO}		V_{CCIO} + 0.5	V
V_{IL}	Low-level input voltage *(2)*				0.3 × V_{CCIO}	V
V_{OH}	High-level output voltage	I_{OUT} = –0.5 mA	0.9 × V_{CCIO}		3.6	V
V_{OL}	Low-level output voltage	I_{OUT} = 1.5 mA			0.1 × V_{CCIO}	V

Table 6–28. 3.3-V AGP 1× Specifications

Symbol	Parameter	Conditions	Minimum	Typical	Maximum	Units
V_{CCIO}	Output supply voltage		3.15	3.3	3.45	V
V_{IH}	High-level input voltage *(2)*		0.5 × V_{CCIO}		V_{CCIO} + 0.5	V
V_{IL}	Low-level input voltage *(2)*				0.3 × V_{CCIO}	V
V_{OH}	High-level output voltage	I_{OUT} = –0.5 mA	0.9 × V_{CCIO}		3.6	V
V_{OL}	Low-level output voltage	I_{OUT} = 1.5 mA			0.1 × V_{CCIO}	V

Table 6–29. 1.5-V HSTL Class I Specifications (Part 1 of 2)

Symbol	Parameter	Conditions	Minimum	Typical	Maximum	Units
V_{CCIO}	Output supply voltage		1.4	1.5	1.6	V
V_{REF}	Input reference voltage		0.68	0.75	0.9	V
V_{TT}	Termination voltage		0.7	0.75	0.8	V
V_{IH} (DC)	DC high-level input voltage		V_{REF} + 0.1			V
V_{IL} (DC)	DC low-level input voltage		–0.3		V_{REF} – 0.1	V
V_{IH} (AC)	AC high-level input voltage		V_{REF} + 0.2			V
V_{IL} (AC)	AC low-level input voltage				V_{REF} – 0.2	V

EP1SGX25DF1020C7 Intel IC FPGA 607 I/O 1020FBGA

Table 6–29. 1.5-V HSTL Class I Specifications (Part 2 of 2)

Symbol	Parameter	Conditions	Minimum	Typical	Maximum	Units
V_{OH}	High-level output voltage	I_{OH} = 8 mA *(1)*	V_{CCIO} – 0.4			V
V_{OL}	Low-level output voltage	I_{OH} = –8 mA *(1)*			0.4	V

Table 6–30. 1.5-V HSTL Class II Specifications

Symbol	Parameter	Conditions	Minimum	Typical	Maximum	Units
V_{CCIO}	Output supply voltage		1.4	1.5	1.6	V
V_{REF}	Input reference voltage		0.68	0.75	0.9	V
V_{TT}	Termination voltage		0.7	0.75	0.8	V
V_{IH} (DC)	DC high-level input voltage		V_{REF} + 0.1			V
V_{IL} (DC)	DC low-level input voltage		–0.3		V_{REF} – 0.1	V
V_{IH} (AC)	AC high-level input voltage		V_{REF} + 0.2			V
V_{IL} (AC)	AC low-level input voltage				V_{REF} – 0.2	V
V_{OH}	High-level output voltage	I_{OH} = 16 mA *(1)*	V_{CCIO} – 0.4			V
V_{OL}	Low-level output voltage	I_{OH} = –16 mA *(1)*			0.4	V

Table 6–31. 1.5-V Differential HSTL Specifications

Symbol	Parameter	Conditions	Minimum	Typical	Maximum	Units
V_{CCIO}	I/O supply voltage		1.4	1.5	1.6	V
V_{DIF} (DC)	DC input differential voltage		0.2			V
V_{CM} (DC)	DC common mode input voltage		0.68		0.9	V
V_{DIF} (AC)	AC differential input voltage		0.4			V

Table 6–32. CTT I/O Specifications (Part 1 of 2)

Symbol	Parameter	Conditions	Minimum	Typical	Maximum	Units
V_{CCIO}	Output supply voltage		3.0	3.3	3.6	V
V_{TT}/V_{REF}	Termination and input reference voltage		1.35	1.5	1.65	V
V_{IH}	High-level input voltage		V_{REF} + 0.2			V
V_{IL}	Low-level input voltage				V_{REF} – 0.2	V

EP1SGX25DF1020C7 Intel IC FPGA 607 I/O 1020FBGA

Table 6–32. CTT I/O Specifications (Part 2 of 2)

Symbol	Parameter	Conditions	Minimum	Typical	Maximum	Units
V_{OH}	High-level output voltage	I_{OH} = –8 mA	V_{REF} + 0.4			V
V_{OL}	Low-level output voltage	I_{OL} = 8 mA			V_{REF} – 0.4	V
I_O	Output leakage current (when output is high *Z*)	GND ≤V_{OUT} ≤ V_{CCIO}	–10		10	µA

Table 6–33. Bus Hold Parameters

Parameter	Conditions	V_{CCIO} Level								Units
		1.5 V		1.8 V		2.5 V		3.3 V		
		Min	Max	Min	Max	Min	Max	Min	Max	
Low sustaining current	V_{IN} > V_{IL} (maximum)	25		30		50		70		µA
High sustaining current	V_{IN} < V_{IH} (minimum)	–25		–30		–50		–70		µA
Low overdrive current	0 V < V_{IN} < V_{CCIO}		160		200		300		500	µA
High overdrive current	0 V < V_{IN} < V_{CCIO}		–160		–200		–300		–500	µA
Bus-hold trip point		0.5	1.0	0.68	1.07	0.7	1.7	0.8	2.0	V

Notes to Tables 6–14 through 6–33:

(1) Drive strength is programmable according to values in the *Stratix GX Architecture* chapter of the *Stratix GX Device Handbook, Volume 1*.

(2) V_{REF} specifies the center point of the switching range.

Power Consumption

Detailed power consumption information for Stratix GX devices will be released when available.

Timing Model

The DirectDrive™ technology and MultiTrack™ interconnect ensure predictable performance, accurate simulation, and accurate timing analysis across all Stratix GX device densities and speed grades. This section describes and specifies the performance, internal, external, and PLL timing specifications.

All specifications are representative of worst-case supply voltage and junction temperature conditions.

Preliminary & Final Timing

Timing models can have either preliminary or final status. The Quartus® II software displays an informational message during the design compilation if the timing models are preliminary. Table 6–34 shows the status of the Stratix GX device timing models.

Preliminary status means the timing model is subject to change. Initially, timing numbers are created using simulation results, process data, and other known parameters. These tests are used to make the preliminary numbers as close to the actual timing parameters as possible.

Final timing numbers are based on actual device operation and testing. These numbers reflect the actual performance of the device under worst-case voltage and junction temperature conditions.

Table 6–34. Stratix GX Device Timing Model Status

Device	Preliminary	Final
EP1SGX10	—	✓
EP1SGX25	—	✓
EP1SGX40	—	✓

Performance

Table 6–35 shows Stratix GX device performance for some common designs. All performance values were obtained with Quartus II software compilation of LPM, or MegaCore® functions for the FIR and FFT designs.

Table 6–35. Stratix GX Device Performance (Part 1 of 3) *Notes (1), (2)*

Applications		Resources Used			Performance			
		LEs	TriMatrix Memory Blocks	DSP Blocks	-5 Speed Grade	-6 Speed Grade	-7 Speed Grade	Units
LE	16-to-1 multiplexer *(1)*	22	0	0	407.83	324.56	288.68	MHz
	32-to-1 multiplexer *(3)*	46	0	0	318.26	255.29	242.89	MHz
	16-bit counter	16	0	0	422.11	422.11	390.01	MHz
	64-bit counter	64	0	0	321.85	290.52	261.23	MHz

EP1SGX25DF1020C7 Intel IC FPGA 607 I/O 1020FBGA

Table 6–35. Stratix GX Device Performance (Part 2 of 3) *Notes (1), (2)*

Applications		Resources Used			Performance			
		LEs	TriMatrix Memory Blocks	DSP Blocks	-5 Speed Grade	-6 Speed Grade	-7 Speed Grade	Units
TriMatrix memory M512 block	Simple dual-port RAM 32 × 18 bit	0	1	0	317.76	277.62	241.48	MHz
	FIFO 32 × 18 bit	30	1	0	319.18	278.86	242.54	MHz
TriMatrix memory M4K block	Simple dual-port RAM 128 × 36 bit	0	1	0	290.86	255.55	222.27	MHz
	True dual-port RAM 128 × 18 bit	0	1	0	290.86	255.55	222.27	MHz
	FIFO 128 × 36 bit	34	1	0	290.86	255.55	222.27	MHz
TriMatrix memory M-RAM block	Single port RAM 4K × 144 bit	1	1	0	255.95	223.06	194.06	MHz
	Simple dual-port RAM 4K × 144 bit	0	1	0	255.95	233.06	194.06	MHz
	True dual-port RAM 4K × 144 bit	0	1	0	255.95	233.06	194.06	MHz
	Single port RAM 8K × 72 bit	0	1	0	278.94	243.19	211.59	MHz
	Simple dual-port RAM 8K × 72 bit	0	1	0	255.95	223.06	194.06	MHz
	True dual-port RAM 8K × 72 bit	0	1	0	255.95	223.06	194.06	MHz
	Single port RAM 16K × 36 bit	0	1	0	280.66	254.32	221.28	MHz
	Simple dual-port RAM 16K × 36 bit	0	1	0	269.83	237.69	206.82	MHz

Table 6–35. Stratix GX Device Performance (Part 3 of 3) *Notes (1), (2)*

Applications		Resources Used			Performance			
		LEs	TriMatrix Memory Blocks	DSP Blocks	-5 Speed Grade	-6 Speed Grade	-7 Speed Grade	Units
TriMatrix memory M-RAM block	True dual-port RAM 16K × 36 bit	0	1	0	269.83	237.69	206.82	MHz
	Single port RAM 32K × 18 bit	0	1	0	275.86	244.55	212.76	MHz
	Simple dual-port RAM 32K × 18 bit	0	1	0	275.86	244.55	212.76	MHz
	True dual-port RAM 32K × 18 bit	0	1	0	275.86	244.55	212.76	MHz
	Single port RAM 64K × 9 bit	0	1	0	287.85	253.29	220.36	MHz
	Simple dual-port RAM 64K × 9 bit	0	1	0	287.85	253.29	220.36	MHz
	True dual-port RAM 64K × 9 bit	0	1	0	287.85	253.29	220.36	MHz
DSP block	9 × 9-bit multiplier *(3)*	0	0	1	335.0	293.94	255.68	MHz
	18 × 18-bit multiplier *(4)*	0	0	1	278.78	237.41	206.52	MHz
	36 × 36-bit multiplier *(4)*	0	0	1	148.25	134.71	117.16	MHz
	36 × 36-bit multiplier *(5)*	0	0	1	278.78	237.41	206.52	MHz
	18-bit, 4-tap FIR filter	0	0	1	278.78	237.41	206.52	MHz
Larger Designs	8-bit, 16-tap parallel FIR filter	58	0	4	141.26	133.49	114.88	MHz
	8-bit, 1,024-point FFT function	870	5	1	261.09	235.51	205.21	MHz

Notes to Table 6–35:

(1) These design performance numbers were obtained using the Quartus II software.
(2) Numbers not listed will be included in a future version of the data sheet.
(3) This application uses registered inputs and outputs.
(4) This application uses registered multiplier input and output stages within the DSP block.
(5) This application uses registered multiplier input, pipeline, and output stages within the DSP block.

EP1SGX25DF1020C7 Intel IC FPGA 607 I/O 1020FBGA

Internal Timing Parameters

Internal timing parameters are specified on a speed grade basis independent of device density. Tables 6–36 through 6–42 describe the Stratix GX device internal timing microparameters for LEs, IOEs, TriMatrix™ memory structures, DSP blocks, and MultiTrack interconnects.

Table 6–36. LE Internal Timing Microparameter Descriptions

Symbol	Parameter
t_{SU}	LE register setup time before clock
t_{H}	LE register hold time after clock
t_{CO}	LE register clock-to-output delay
t_{LUT}	LE combinational LUT delay for data-in to data-out
t_{CLR}	Minimum clear pulse width
t_{PRE}	Minimum preset pulse width
t_{CLKHL}	Minimum clock high or low time

Table 6–37. IOE Internal Timing Microparameter Descriptions

Symbol	Parameter
t_{SU}	IOE input and output register setup time before clock
t_{H}	IOE input and output register hold time after clock
t_{CO}	IOE input and output register clock-to-output delay
$t_{PIN2COMBOUT_R}$	Row input pin to IOE combinational output
$t_{PIN2COMBOUT_C}$	Column input pin to IOE combinational output
$t_{COMBIN2PIN_R}$	Row IOE data input to combinational output pin
$t_{COMBIN2PIN_C}$	Column IOE data input to combinational output pin
t_{CLR}	Minimum clear pulse width
t_{PRE}	Minimum preset pulse width
t_{CLKHL}	Minimum clock high or low time

EP1SGX25DF1020C7 Intel IC FPGA 607 I/O 1020FBGA

Table 6–38. DSP Block Internal Timing Microparameter Descriptions	
Symbol	**Parameter**
t_{SU}	Input, pipeline, and output register setup time before clock
t_{H}	Input, pipeline, and output register hold time after clock
t_{CO}	Input, pipeline, and output register clock-to-output delay
$t_{INREG2PIPE9}$	Input register to DSP block pipeline register in 9 × 9-bit mode
$t_{INREG2PIPE18}$	Input register to DSP block pipeline register in 18 × 18-bit mode
$t_{PIPE2OUTREG2ADD}$	DSP block pipeline register to output register delay in two-multipliers adder mode
$t_{PIPE2OUTREG4ADD}$	DSP Block Pipeline Register to output register delay in four-multipliers adder mode
t_{PD9}	Combinational input to output delay for 9 × 9-bit mode
t_{PD18}	Combinational input to output delay for 18 × 18-bit mode
t_{PD36}	Combinational input to output delay for 36 × 36-bit mode
t_{CLR}	Minimum clear pulse width
t_{CLKHL}	Minimum clock high or low time

Table 6–39. M512 Block Internal Timing Microparameter Descriptions	
Symbol	**Parameter**
t_{M512RC}	Synchronous read cycle time
t_{M512WC}	Synchronous write cycle time
$t_{M512WERESU}$	Write or read enable setup time before clock
$t_{M512WEREH}$	Write or read enable hold time after clock
$t_{M512DATASU}$	Data setup time before clock
$t_{M512DATAH}$	Data hold time after clock
$t_{M512WADDRSU}$	Write address setup time before clock
$t_{M512WADDRH}$	Write address hold time after clock
$t_{M512RADDRSU}$	Read address setup time before clock
$t_{M512RADDRH}$	Read address hold time after clock
$t_{M512DATACO1}$	Clock-to-output delay when using output registers
$t_{M512DATACO2}$	Clock-to-output delay without output registers
$t_{M512CLKHL}$	Minimum clock high or low time
$t_{M512CLR}$	Minimum clear pulse width

EP1SGX25DF1020C7 Intel IC FPGA 607 I/O 1020FBGA

Table 6–40. M4K Block Internal Timing Microparameter Descriptions

Symbol	Parameter
t_{M4KRC}	Synchronous read cycle time
t_{M4KWC}	Synchronous write cycle time
$t_{M4KWERESU}$	Write or read enable setup time before clock
$t_{M4KWEREH}$	Write or read enable hold time after clock
$t_{M4KBESU}$	Byte enable setup time before clock
t_{M4KBEH}	Byte enable hold time after clock
$t_{M4KDATAASU}$	A port data setup time before clock
$t_{M4KDATAAH}$	A port data hold time after clock
$t_{M4KADDRASU}$	A port address setup time before clock
$t_{M4KADDRAH}$	A port address hold time after clock
$t_{M4KDATABSU}$	B port data setup time before clock
$t_{M4KDATABH}$	B port data hold time after clock
$t_{M4KADDRBSU}$	B port address setup time before clock
$t_{M4KADDRBH}$	B port address hold time after clock
$t_{M4KDATACO1}$	Clock-to-output delay when using output registers
$t_{M4KDATACO2}$	Clock-to-output delay without output registers
$t_{M4KCLKHL}$	Minimum clock high or low time
t_{M4KCLR}	Minimum clear pulse width

Table 6–41. M-RAM Block Internal Timing Microparameter Descriptions (Part 1 of 2)

Symbol	Parameter
t_{MRAMRC}	Synchronous read cycle time
t_{MRAMWC}	Synchronous write cycle time
$t_{MRAMWERESU}$	Write or read enable setup time before clock
$t_{MRAMWEREH}$	Write or read enable hold time after clock
$t_{MRAMBESU}$	Byte enable setup time before clock
$t_{MRAMBEH}$	Byte enable hold time after clock
$t_{MRAMDATAASU}$	A port data setup time before clock
$t_{MRAMDATAAH}$	A port data hold time after clock
$t_{MRAMADDRASU}$	A port address setup time before clock
$t_{MRAMADDRAH}$	A port address hold time after clock

EP1SGX25DF1020C7 Intel IC FPGA 607 I/O 1020FBGA

Table 6–41. M-RAM Block Internal Timing Microparameter Descriptions (Part 2 of 2)

Symbol	Parameter
$t_{MRAMDATABSU}$	B port setup time before clock
$t_{MRAMDATABH}$	B port hold time after clock
$t_{MRAMADDRBSU}$	B port address setup time before clock
$t_{MRAMADDRBH}$	B port address hold time after clock
$t_{MRAMDATACO1}$	Clock-to-output delay when using output registers
$t_{MRAMDATACO2}$	Clock-to-output delay without output registers
$t_{MRAMCLKHL}$	Minimum clock high or low time
$t_{MRAMCLR}$	Minimum clear pulse width

Table 6–42. Routing Delay Internal Timing Microparameter Descriptions

Symbol	Parameter
t_{R4}	Delay for an R4 line with average loading; covers a distance of four LAB columns
t_{R8}	Delay for an R8 line with average loading; covers a distance of eight LAB columns
t_{R24}	Delay for an R24 line with average loading; covers a distance of 24 LAB columns
t_{C4}	Delay for an C4 line with average loading; covers a distance of four LAB rows
t_{C8}	Delay for an C8 line with average loading; covers a distance of eight LAB rows
t_{C16}	Delay for an C16 line with average loading; covers a distance of 16 LAB rows
t_{LOCAL}	Local interconnect delay

Table 6–43. Stratix GX Reset & PLL Lock Time Parameter Descriptions (Part 1 of 2)

Symbol	Parameter
$t_{ANALOGRESETPW}$	Pulse width to power down analog circuits.
$t_{DIGITALRESETPW}$	Pulse width to reset digital circuits
$t_{TX_PLL_LOCK}$	The time it takes the `tx_pll` to lock to the reference clock.

Table 6–43. Stratix GX Reset & PLL Lock Time Parameter Descriptions (Part 2 of 2)	
Symbol	**Parameter**
$t_{RX_FREQLOCK}$	The time until the clock recovery unit (CRU) switches to data mode from lock to reference mode.
$t_{RX_FREQLOCK2PHASELOCK}$	The time until CRU phase locks to data after switching from lock to data mode.

Figure 6–4 shows the TriMatrix memory waveforms for the M512, M4K, and M-RAM timing parameters shown in Tables 6–39 through 6–41.

Figure 6–4. Dual-Port RAM Timing Microparameter Waveform

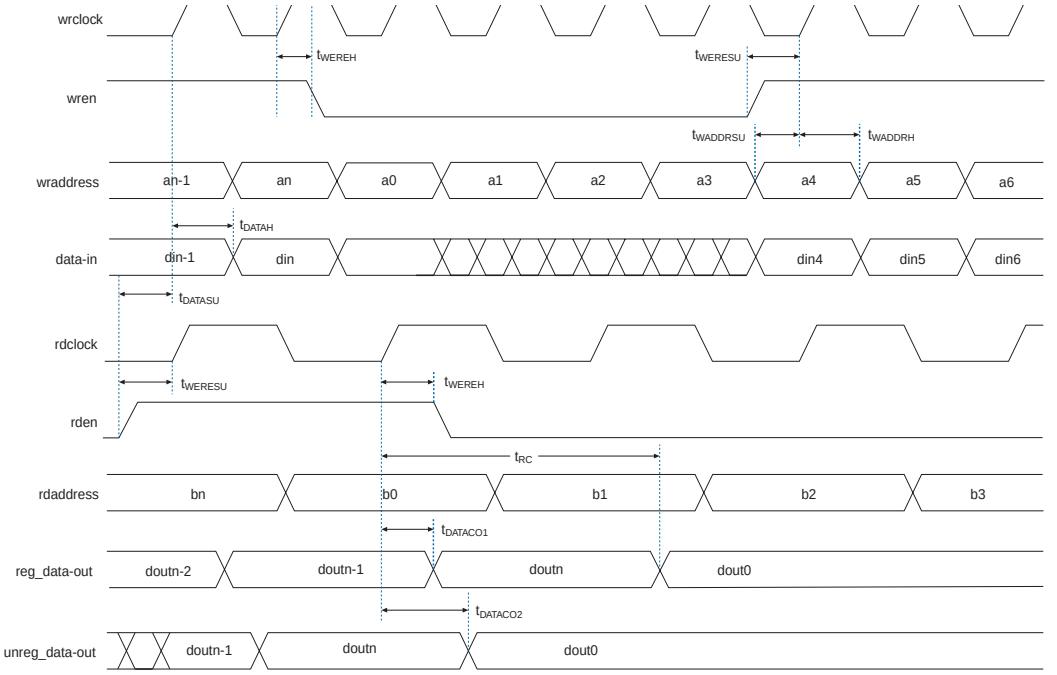

Figure 6–5. Stratix GX Transceiver Reset & PLL Lock Time Waveform *Note (1)*

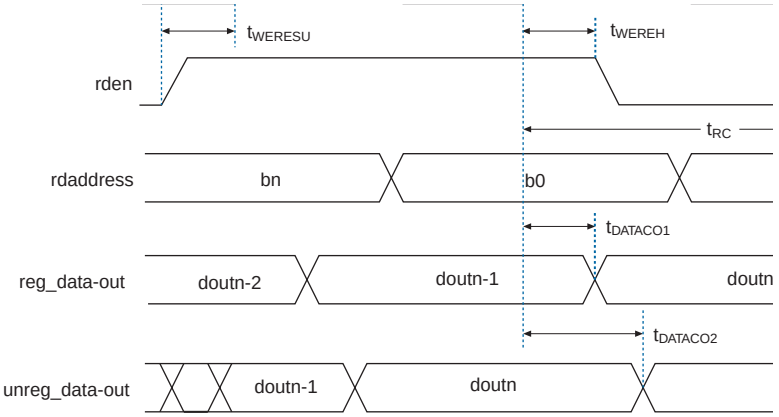

Note to Figure 6–5:

(1) Waveforms are for minimum pulse width timing and output timing only. Please refer to the *Stratix GX Transceiver User Guide* for the complete reset sequence.

Tables 6–44 through 6–50 show the internal timing microparameters for all Stratix GX devices.

Table 6–44. LE Internal Timing Microparameters

Symbol	-5 Speed Grade		-6 Speed Grade		-7 Speed Grade		Unit
	Min	Max	Min	Max	Min	Max	
t_{SU}	10		10		11		ps
t_{H}	100		100		114		ps
t_{CO}		156		176		202	ps
t_{LUT}		366		459		527	ps
t_{CLR}	100		100		114		ps
t_{PRE}	100		100		114		ps
t_{CLKHL}	100		100		114		ps

EP1SGX25DF1020C7 Intel IC FPGA 607 I/O 1020FBGA

Table 6–45. IOE Internal Timing Microparameters

Symbol	-5 Speed Grade		-6 Speed Grade		-7 Speed Grade		Unit
	Min	Max	Min	Max	Min	Max	
t_{SU}	64		68		68		ps
t_{H}	76		80		80		ps
t_{CO}		162		171		171	ps
$t_{PIN2COMBOUT_R}$		1,038		1,093		1,256	ps
$t_{PIN2COMBOUT_C}$		927		976		1,122	ps
$t_{COMBIN2PIN_R}$		2,944		3,099		3,563	ps
$t_{COMBIN2PIN_C}$		3,189		3,357		3,860	ps
t_{CLR}	262		276		317		ps
t_{PRE}	262		276		317		ps
t_{CLKHL}	90		95		109		ps

Table 6–46. DSP Block Internal Timing Microparameters

Symbol	-5 Speed Grade		-6 Speed Grade		-7 Speed Grade		Unit
	Min	Max	Min	Max	Min	Max	
t_{SU}	0		0		0		ps
t_{H}	67		75		86		ps
t_{CO}		142		158		181	ps
$t_{INREG2PIPE18}$		2,613		2,982		3,429	ps
$t_{INREG2PIPE9}$		3,390		3,993		4,591	ps
$t_{PIPE2OUTREG2ADD}$		2,002		2,203		2,533	ps
$t_{PIPE2OUTREG4ADD}$		2,899		3,189		3,667	ps
t_{PD9}		3,709		4,081		4,692	ps
t_{PD18}		4,795		5,275		6,065	ps
t_{PD36}		7,495		8,245		9,481	ps
t_{CLR}	450		500		575		ps
t_{CLKHL}	1,350		1,500		1,724		ps

Table 6–47. M512 Block Internal Timing Microparameters

Symbol	-5 Speed Grade		-6 Speed Grade		-7 Speed Grade		Unit
	Min	Max	Min	Max	Min	Max	
t_{M512RC}		3,340		3,816		4,387	ps
t_{M512WC}		3,318		3,590		4,128	ps
$t_{M512WERESU}$	110		123		141		ps
$t_{M512WERH}$	34		38		43		ps
$t_{M512DATASU}$	110		123		141		ps
$t_{M512DATAH}$	34		38		43		ps
$t_{M512WADDRASU}$	110		123		141		ps
$t_{M512WADDRH}$	34		38		43		ps
$t_{M512DATACO1}$		424		472		541	ps
$t_{M512DATACO2}$		3,366		3,846		4,421	ps
$t_{M512CLKHL}$	150		167		192		ps
$t_{M512CLR}$	170		189		217		ps

Table 6–48. M4K Block Internal Timing Microparameters (Part 1 of 2)

Symbol	-5 Speed Grade		-6 Speed Grade		-7 Speed Grade		Unit
	Min	Max	Min	Max	Min	Max	
t_{M4KRC}		3,807		4,320		4,967	ps
t_{M4KWC}		2,556		2,840		3,265	ps
$t_{M4KWERESU}$	131		149		171		ps
$t_{M4KWERH}$	34		38		43		ps
$t_{M4KDATASU}$	131		149		171		ps
$t_{M4KDATAH}$	34		38		43		ps
$t_{M4KWADDRASU}$	131		149		171		ps
$t_{M4KWADDRH}$	34		38		43		ps
$t_{M4KRADDRASU}$	131		149		171		ps
$t_{M4KRADDRH}$	34		38		43		ps
$t_{M4KDATABSU}$	131		149		171		ps
$t_{M4KDATABH}$	34		38		43		ps
$t_{M4KADDRBSU}$	131		149		171		ps
$t_{M4KADDRBH}$	34		38		43		ps

Table 6–48. M4K Block Internal Timing Microparameters (Part 2 of 2)

Symbol	-5 Speed Grade		-6 Speed Grade		-7 Speed Grade		Unit
	Min	Max	Min	Max	Min	Max	
$t_{M4KDATACO1}$		571		635		729	ps
$t_{M4KDATACO2}$		3,984		4,507		5,182	ps
$t_{M4KCLKHL}$	150		167		192		ps
t_{M4KCLR}	170		189		255		ps

Table 6–49. M-RAM Block Internal Timing Microparameters

Symbol	-5		-6		-7		Unit
	Min	Max	Min	Max	Min	Max	
t_{MRAMRC}		4,364		4,838		5,562	ps
t_{MRAMWC}		3,654		4,127		4,746	ps
$t_{MRAMWERESU}$	25		25		28		ps
$t_{MRAMWERH}$	18		20		23		ps
$t_{MRAMDATASU}$	25		25		28		ps
$t_{MRAMDATAH}$	18		20		23		ps
$t_{MRAMWADDRASU}$	25		25		28		ps
$t_{MRAMWADDRH}$	18		20		23		ps
$t_{MRAMRADDRASU}$	25		25		28		ps
$t_{MRAMRADDRH}$	18		20		23		ps
$t_{MRAMDATABSU}$	25		25		28		ps
$t_{MRAMDATABH}$	18		20		23		ps
$t_{MRAMADDRBSU}$	25		25		28		ps
$t_{MRAMADDRBH}$	18		20		23		ps
$t_{MRAMDATACO1}$		1,038		1,053		1,210	ps
$t_{MRAMDATACO2}$		4,362		4,939		5,678	ps
$t_{MRAMCLKHL}$	270		300		345		ps
$t_{MRAMCLR}$	135		150		172		ps

EP1SGX25DF1020C7 Intel IC FPGA 607 I/O 1020FBGA

Table 6–50. Stratix GX Transceiver Reset & PLL Lock Time Parameters

Symbol	Min	Typ	Max	Units
$t_{ANALOGRESETPW}$ (5)	1			mS
$t_{DIGITALRESETPW}$ (5)	4			Parallel clock cycle
$t_{TX_PLL_LOCK}$ (3)			10	µS
$t_{RX_FREQLOCK}$ (4)			5	mS
$t_{RX_FREQLOCK2PHASELOCK}$ (2)			5	µS

Notes to Table 6–50:

(1) The minimum pulse width specified is associated with the power-down of circuits.

(2) The clock recovery unit (CRU) phase locked-to-data time is based on a data rate of 500 Mbps and 8B/10B encoded data.

(3) After `#pll_areset`, `pll_enable`, or PLL power-up, the time required for the transceiver PLL to lock to the reference clock.

(4) After `#rx_analogreset`, the time for the CRU to switch to lock-to-data mode.

(5) There is no maximum pulse width specification. The GXB can be held in reset indefinitely.

Routing delays vary depending on the load on a specific routing line. The Quartus II software reports the routing delay information when running the timing analysis for a design. Contact Altera Applications Engineering for more details.

External Timing Parameters

External timing parameters are specified by device density and speed grade. Figure 6–6 shows the timing model for bidirectional IOE pin timing. All registers are within the IOE.

Figure 6–6. External Timing in Stratix GX Devices

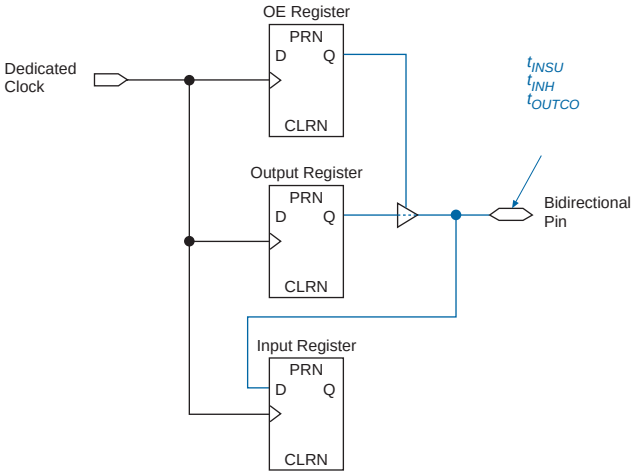

All external I/O timing parameters shown are for 3.3-V LVTTL or LVCMOS I/O standards with the maximum current strength. For external I/O timing using standards other than LVTTL or LVCMOS use the I/O standard input and output delay adders in Tables 6–72 through 6–76.

Table 6–51 shows the external I/O timing parameters when using fast regional clock networks.

Table 6–51. Stratix GX Fast Regional Clock External I/O Timing Parameters *Notes (1), (2)*

Symbol	Parameter	Conditions
t_{INSU}	Setup time for input or bidirectional pin using column IOE input register with fast regional clock fed by FCLK pin	
t_{INH}	Hold time for input or bidirectional pin using column IOE input register with fast regional clock fed by FCLK pin	
t_{OUTCO}	Clock-to-output delay output or bidirectional pin using column IOE output register with fast regional clock fed by FCLK pin	C_{LOAD} = 10 pF

Notes to Table 6–51:

(1) These timing parameters are sample-tested only.

(2) These timing parameters are for column IOE pins. Row IOE pins are 100- to 250-ps slower depending on device and speed grade and whether it is t_{CO} or t_{SU}. You should use the Quartus II software to verify the external timing for any pin.

EP1SGX25DF1020C7 Intel IC FPGA 607 I/O 1020FBGA

Table 6–52 shows the external I/O timing parameters when using regional clock networks.

Table 6–52. Stratix GX Regional Clock External I/O Timing Parameters *Notes (1), (2)*		
Symbol	**Parameter**	**Conditions**
t_{INSU}	Setup time for input or bidirectional pin using column IOE input register with regional clock fed by CLK pin	
t_{INH}	Hold time for input or bidirectional pin using column IOE input register with regional clock fed by CLK pin	
t_{OUTCO}	Clock-to-output delay output or bidirectional pin using column IOE output register with regional clock fed by CLK pin	C_{LOAD} = 10 pF
$t_{INSUPLL}$	Setup time for input or bidirectional pin using column IOE input register with regional clock fed by Enhanced PLL with default phase setting	
t_{INHPLL}	Hold time for input or bidirectional pin using column IOE input register with regional clock fed by Enhanced PLL with default phase setting	
$t_{OUTCOPLL}$	Clock-to-output delay output or bidirectional pin using column IOE output register with regional clock Enhanced PLL with default phase setting	C_{LOAD} = 10 pF

Notes to Table 6–52:
(1) These timing parameters are sample-tested only.
(2) These timing parameters are for column IOE pins. Row IOE pins are 100- to 250-ps slower depending on device, speed grade, and the specific parameter in question. You should use the Quartus II software to verify the external timing for any pin.

Table 6–53 shows the external I/O timing parameters when using global clock networks.

Table 6–53. Stratix GX Global Clock External I/O Timing Parameters (Part 1 of 2) *Notes (1), (2)*		
Symbol	**Parameter**	**Conditions**
t_{INSU}	Setup time for input or bidirectional pin using column IOE input register with global clock fed by CLK pin	
t_{INH}	Hold time for input or bidirectional pin using column IOE input register with global clock fed by CLK pin	
t_{OUTCO}	Clock-to-output delay output or bidirectional pin using column IOE output register with global clock fed by CLK pin	C_{LOAD} = 10 pF
$t_{INSUPLL}$	Setup time for input or bidirectional pin using column IOE input register with global clock fed by Enhanced PLL with default phase setting	

EP1SGX25DF1020C7 Intel IC FPGA 607 I/O 1020FBGA

Table 6–53. Stratix GX Global Clock External I/O Timing Parameters (Part 2 of 2) Notes (1), (2)		
Symbol	**Parameter**	**Conditions**
t_{INHPLL}	Hold time for input or bidirectional pin using column IOE input register with global clock fed by enhanced PLL with default phase setting	
$t_{OUTCOPLL}$	Clock-to-output delay output or bidirectional pin using column IOE output register with global clock enhanced PLL with default phase setting	C_{LOAD} = 10 pF

Notes to Table 6–53:
(1) These timing parameters are sample-tested only.
(2) These timing parameters are for column IOE pins. Row IOE pins are 100- to 250-ps slower depending on device, speed grade, and the specific parameter in question. You should use the Quartus II software to verify the external timing for any pin.

Tables 6–54 through 6–59 show the external timing parameters on column and row pins for EP1SGX10 devices.

Table 6–54. EP1SGX10 Column Pin Fast Regional Clock External I/O Timing Parameters							
Symbol	**-5 Speed Grade**		**-6 Speed Grade**		**-7 Speed Grade**		**Unit**
	Min	**Max**	**Min**	**Max**	**Min**	**Max**	
t_{INSU}	2.245		2.332		2.666		ns
t_{INH}	0.000		0.000		0.000		ns
t_{OUTCO}	2.000	4.597	2.000	4.920	2.000	5.635	ns

Table 6–55. EP1SGX10 Column Pin Regional Clock External I/O Timing Parameters							
Symbol	**-5 Speed Grade**		**-6 Speed Grade**		**-7 Speed Grade**		**Unit**
	Min	**Max**	**Min**	**Max**	**Min**	**Max**	
t_{INSU}	2.114		2.218		2.348		ns
t_{INH}	0.000		0.000		0.000		ns
t_{OUTCO}	2.000	4.728	2.000	5.078	2.000	6.004	ns
$t_{INSUPLL}$	1.035		0.941		1.070		ns
t_{INHPLL}	0.000		0.000		0.000		ns
$t_{OUTCOPLL}$	0.500	2.629	0.500	2.769	0.500	3.158	ns

EP1SGX25DF1020C7 Intel IC FPGA 607 I/O 1020FBGA

Table 6–56. EP1SGX10 Column Pin Global Clock External I/O Timing Parameters

Symbol	-5 Speed Grade		-6 Speed Grade		-7 Speed Grade		Unit
	Min	Max	Min	Max	Min	Max	
t_{INSU}	1.785		1.814		2.087		ns
t_{INH}	0.000		0.000		0.000		ns
t_{OUTCO}	2.000	5.057	2.000	5.438	2.000	6.214	ns
$t_{INSUPLL}$	0.988		0.936		1.066		ns
t_{INHPLL}	0.000		0.000		0.000		ns
$t_{OUTCOPLL}$	0.500	2.634	0.500	2.774	0.500	3.162	ns

Table 6–57. EP1SGX10 Row Pin Fast Regional Clock External I/O Timing Parameters

Symbol	-5 Speed Grade		-6 Speed Grade		-7 Speed Grade		Unit
	Min	Max	Min	Max	Min	Max	
t_{INSU}	2.194		2.384		2.727		ns
t_{INH}	0.000		0.000		0.000		ns
t_{OUTCO}	2.000	4.956	2.000	4.971	2.000	5.463	ns

Table 6–58. EP1SGX10 Row Pin Regional Clock External I/O Timing Parameters

Symbol	-5 Speed Grade		-6 Speed Grade		-7 Speed Grade		Unit
	Min	Max	Min	Max	Min	Max	
t_{INSU}	2.244		2.413		2.574		ns
t_{INH}	0.000		0.000		0.000		ns
t_{OUTCO}	2.000	4.906	2.000	4.942	2.000	5.616	ns
$t_{INSUPLL}$	1.126		1.186		1.352		ns
t_{INHPLL}	0.000		0.000		0.000		ns
$t_{OUTCOPLL}$	0.500	2.804	0.500	2.627	0.500	2.765	ns

Table 6–59. EP1SGX10 Row Pin Global Clock External I/O Timing Parameters (Part 1 of 2)

Symbol	-5 Speed Grade		-6 Speed Grade		-7 Speed Grade		Unit
	Min	Max	Min	Max	Min	Max	
t_{INSU}	1.919		2.062		2.368		ns
t_{INH}	0.000		0.000		0.000		ns

Table 6–59. EP1SGX10 Row Pin Global Clock External I/O Timing Parameters (Part 2 of 2)

Symbol	-5 Speed Grade		-6 Speed Grade		-7 Speed Grade		Unit
	Min	Max	Min	Max	Min	Max	
t_{OUTCO}	2.000	5.231	2.000	5.293	2.000	5.822	ns
$t_{INSUPLL}$	1.126		1.186		1.352		ns
t_{INHPLL}	0.000		0.000		0.000		ns
$t_{OUTCOPLL}$	0.500	2.804	0.500	2.627	0.500	2.765	ns

Tables 6–60 through 6–65 show the external timing parameters on column and row pins for EP1SGX25 devices.

Table 6–60. EP1SGX25 Column Pin Fast Regional Clock External I/O Timing Parameters

Symbol	-5 Speed Grade		-6 Speed Grade		-7 Speed Grade		Unit
	Min	Max	Min	Max	Min	Max	
t_{INSU}	2.418		2.618		3.014		ns
t_{INH}	0.000		0.000		0.000		ns
t_{OUTCO}	2.000	4.524	2.000	4.834	2.000	5.538	ns

Table 6–61. EP1SGX25 Column Pin Regional Clock External I/O Timing Parameters

Symbol	-5 Speed Grade		-6 Speed Grade		-7 Speed Grade		Unit
	Min	Max	Min	Max	Min	Max	
t_{INSU}	1.713		1.838		2.069		ns
t_{INH}	0.000		0.000		0.000		ns
t_{OUTCO}	2.000	5.229	2.000	5.614	2.000	6.432	ns
$t_{INSUPLL}$	1.061		1.155		1.284		ns
t_{INHPLL}	0.000		0.000		0.000		ns
$t_{OUTCOPLL}$	0.500	2.661	0.500	2.799	0.500	3.195	ns

EP1SGX25DF1020C7 Intel IC FPGA 607 I/O 1020FBGA

Table 6–62. EP1SGX25 Column Pin Global Clock External I/O Timing Parameters

Symbol	-5 Speed Grade		-6 Speed Grade		-7 Speed Grade		Unit
	Min	Max	Min	Max	Min	Max	
t_{INSU}	1.790		1.883		2.120		ns
t_{INH}	0.000		0.000		0.000		ns
t_{OUTCO}	2.000	5.194	2.000	5.569	2.000	6.381	ns
$t_{INSUPLL}$	1.046		1.141		1.220		ns
t_{INHPLL}	0.000		0.000		0.000		ns
$t_{OUTCOPLL}$	0.500	2.676	0.500	2.813	0.500	3.208	ns

Table 6–63. EP1SGX25 Row Pin Fast Regional Clock External I/O Timing Parameters

Symbol	-5 Speed Grade		-6 Speed Grade		-7 Speed Grade		Unit
	Min	Max	Min	Max	Min	Max	
t_{INSU}	2.394		2.594		2.936		ns
t_{INH}	0.000		0.000		0.000		ns
t_{OUTCO}	2.000	4.456	2.000	4.761	2.000	5.454	ns

Table 6–64. EP1SGX25 Row Pin Regional Clock External I/O Timing Parameters

Symbol	-5 Speed Grade		-6 Speed Grade		-7 Speed Grade		Unit
	Min	Max	Min	Max	Min	Max	
t_{INSU}	1.970		2.109		2.377		ns
t_{INH}	0.000		0.000		0.000		ns
t_{OUTCO}	2.000	4.880	2.000	5.246	2.000	6.013	ns
$t_{INSUPLL}$	1.326		1.386		1.552		ns
t_{INHPLL}	0.000		0.000		0.000		ns
$t_{OUTCOPLL}$	0.500	2.304	0.500	2.427	0.500	2.765	ns

Table 6–65. EP1SGX25 Row Pin Global Clock External I/O Timing Parameters (Part 1 of 2)

Symbol	-5 Speed Grade		-6 Speed Grade		-7 Speed Grade		Unit
	Min	Max	Min	Max	Min	Max	
t_{INSU}	1.963		2.108		2.379		ns
t_{INH}	0.000		0.000		0.000		ns

Table 6–65. EP1SGX25 Row Pin Global Clock External I/O Timing Parameters (Part 2 of 2)

Symbol	-5 Speed Grade		-6 Speed Grade		-7 Speed Grade		Unit
	Min	Max	Min	Max	Min	Max	
t_{OUTCO}	2.000	4.887	2.000	5.247	2.000	6.011	ns
$t_{INSUPLL}$	1.326		1.386		1.552		ns
t_{INHPLL}	0.000		0.000		0.000		ns
$t_{OUTCOPLL}$	0.500	2.304	0.500	2.427	0.500	2.765	ns

Tables 6–66 through 6–71 show the external timing parameters on column and row pins for EP1SGX40 devices.

Table 6–66. EP1SGX40 Column Pin Fast Regional Clock External I/O Timing Parameters

Symbol	-5 Speed Grade		-6 Speed Grade		-7 Speed Grade		Unit
	Min	Max	Min	Max	Min	Max	
t_{INSU}	2.704		2.912		3.235		ns
t_{INH}	0.000		0.000		0.000		ns
t_{OUTCO}	2.000	5.060	2.000	5.432	2.000	6.226	ns

Table 6–67. EP1SGX40 Column Pin Regional Clock External I/O Timing Parameters

Symbol	-5 Speed Grade		-6 Speed Grade		-7 Speed Grade		Unit
	Min	Max	Min	Max	Min	Max	
t_{INSU}	2.467		2.671		3.011		ns
t_{INH}	0.000		0.000		0.000		ns
t_{OUTCO}	2.000	5.255	2.000	5.673	2.000	6.501	ns
$t_{INSUPLL}$	1.254		1.259		1.445		ns
t_{INHPLL}	0.000		0.000		0.000		ns
$t_{OUTCOPLL}$	0.500	2.610	0.500	2.751	0.500	3.134	ns

EP1SGX25DF1020C7 Intel IC FPGA 607 I/O 1020FBGA

Table 6–68. EP1SGX40 Column Pin Global Clock External I/O Timing Parameters

Symbol	-5 Speed Grade		-6 Speed Grade		-7 Speed Grade		Unit
	Min	Max	Min	Max	Min	Max	
t_{INSU}	2.033		2.184		2.451		ns
t_{INH}	0.000		0.000		0.000		ns
t_{OUTCO}	2.000	5.689	2.000	6.116	2.000	7.010	ns
$t_{INSUPLL}$	1.228		1.278		1.415		ns
t_{INHPLL}	0.000		0.000		0.000		ns
$t_{OUTCOPLL}$	0.500	2.594	0.500	2.732	0.500	3.113	ns

Table 6–69. EP1SGX40 Row Pin Fast Regional Clock External I/O Timing Parameters

Symbol	-5 Speed Grade		-6 Speed Grade		-7 Speed Grade		Unit
	Min	Max	Min	Max	Min	Max	
t_{INSU}	2.450		2.662		3.046		ns
t_{INH}	0.000		0.000		0.000		ns
t_{OUTCO}	2.000	4.880	2.000	5.241	2.000	6.004	ns

Table 6–70. EP1SGX40 Row Pin Regional Clock External I/O Timing Parameters

Symbol	-5 Speed Grade		-6 Speed Grade		-7 Speed Grade		Unit
	Min	Max	Min	Max	Min	Max	
t_{INSU}	2.398		2.567		2.938		ns
t_{INH}	0.000		0.000		0.000		ns
t_{OUTCO}	2.000	4.932	2.000	5.336	2.000	6.112	ns
$t_{INSUPLL}$	1.126		1.186		1.352		ns
t_{INHPLL}	0.000		0.000		0.000		ns
$t_{OUTCOPLL}$	0.500	2.304	0.500	2.427	0.500	2.765	ns

Table 6–71. EP1SGX40 Row Pin Global Clock External I/O Timing Parameters (Part 1 of 2)

Symbol	-5 Speed Grade		-6 Speed Grade		-7 Speed Grade		Unit
	Min	Max	Min	Max	Min	Max	
t_{INSU}	1.965		2.128		2.429		ns
t_{INH}	0.000		0.000		0.000		ns

EP1SGX25DF1020C7 Intel IC FPGA 607 I/O 1020FBGA

Table 6–71. EP1SGX40 Row Pin Global Clock External I/O Timing Parameters (Part 2 of 2)

Symbol	-5 Speed Grade		-6 Speed Grade		-7 Speed Grade		Unit
	Min	Max	Min	Max	Min	Max	
t_{OUTCO}	2.000	5.365	2.000	5.775	2.000	6.621	ns
$t_{INSUPLL}$	1.126		1.186		1.352		ns
t_{INHPLL}	0.000		0.000		0.000		ns
$t_{OUTCOPLL}$	0.500	2.304	0.500	2.427	0.500	2.765	ns

External I/O Delay Parameters

External I/O delay timing parameters, both for I/O standard input and output adders and programmable input and output delays, are specified by speed grade, independent of device density.

Tables 6–72 through 6–77 show the adder delays associated with column and row I/O pins. If an I/O standard is selected other than LVTTL 24 mA with a fast slew rate, add the selected delay to the external t_{CO} and t_{SU} I/O parameters.

Table 6–72. Stratix GX I/O Standard Column Pin Input Delay Adders (Part 1 of 2)

I/O Standard	-5 Speed Grade		-6 Speed Grade		-7 Speed Grade		Unit
	Min	Max	Min	Max	Min	Max	
LVCMOS		0		0		0	ps
3.3-V LVTTL		0		0		0	ps
2.5-V LVTTL		30		31		35	ps
1.8-V LVTTL		150		157		180	ps
1.5-V LVTTL		210		220		252	ps
GTL		220		231		265	ps
GTL+		220		231		265	ps
3.3-V PCI		0		0		0	ps
3.3-V PCI-X 1.0		0		0		0	ps
Compact PCI		0		0		0	ps
AGP 1×		0		0		0	ps
AGP 2×		0		0		0	ps
CTT		120		126		144	ps
SSTL-3 class I		–30		–32		–37	ps
SSTL-3 class II		–30		–32		–37	ps

EP1SGX25DF1020C7 Intel IC FPGA 607 I/O 1020FBGA

Table 6–72. Stratix GX I/O Standard Column Pin Input Delay Adders (Part 2 of 2)

I/O Standard	-5 Speed Grade		-6 Speed Grade		-7 Speed Grade		Unit
	Min	Max	Min	Max	Min	Max	
SSTL-2 class I		–70		–74		–86	ps
SSTL-2 class II		–70		–74		–86	ps
SSTL-18 class I		180		189		217	ps
SSTL-18 class II		180		189		217	ps
1.5-V HSTL class I		120		126		144	ps
1.5-V HSTL class II		120		126		144	ps
1.8-V HSTL class I		70		73		83	ps
1.8-V HSTL class II		70		73		83	ps

Table 6–73. Stratix GX I/O Standard Row Pin Input Delay Adders (Part 1 of 2)

I/O Standard	-5 Speed Grade		-6 Speed Grade		-7 Speed Grade		Unit
	Min	Max	Min	Max	Min	Max	
LVCMOS		0		0		0	ps
3.3-V LVTTL		0		0		0	ps
2.5-V LVTTL		30		31		35	ps
1.8-V LVTTL		150		157		180	ps
1.5-V LVTTL		210		220		252	ps
GTL		0		0		0	ps
GTL+		220		231		265	ps
3.3-V PCI		0		0		0	ps
3.3-V PCI-X 1.0		0		0		0	ps
Compact PCI		0		0		0	ps
AGP 1×		0		0		0	ps
AGP 2×		0		0		0	ps
CTT		80		84		96	ps
SSTL-3 class I		–30		–32		–37	ps
SSTL-3 class II		–30		–32		–37	ps
SSTL-2 class I		–70		–74		–86	ps
SSTL-2 class II		–70		–74		–86	ps
SSTL-18 class I		180		189		217	ps
SSTL-18 class II		0		0		0	ps
1.5-V HSTL class I		130		136		156	ps

Table 6–73. Stratix GX I/O Standard Row Pin Input Delay Adders (Part 2 of 2)

I/O Standard	-5 Speed Grade		-6 Speed Grade		-7 Speed Grade		Unit
	Min	Max	Min	Max	Min	Max	
1.5-V HSTL class II		0		0		0	ps
1.8-V HSTL class I		70		73		83	ps
1.8-V HSTL class II		70		73		83	ps
LVDS *(1)*		40		42		48	ps
LVPECL *(1)*		–50		–53		–61	ps
3.3-V PCML *(1)*		330		346		397	ps
HyperTransport *(1)*		80		84		96	ps

Table 6–74. Stratix GX I/O Standard Output Delay Adders for Fast Slew Rate on Column Pins (Part 1 of 2)

Standard		-5 Speed Grade		-6 Speed Grade		-7 Speed Grade		Unit
		Min	Max	Min	Max	Min	Max	
LVCMOS	2 mA		570		599		689	ps
	4 mA		570		599		689	ps
	8 mA		350		368		423	ps
	12 mA		130		137		157	ps
	24 mA		0		0		0	ps
3.3-V LVTTL	4 mA		570		599		689	ps
	8 mA		350		368		423	ps
	12 mA		130		137		157	ps
	16 mA		70		74		85	ps
	24 mA		0		0		0	ps
2.5-V LVTTL	2 mA		830		872		1,002	ps
	8 mA		250		263		302	ps
	12 mA		140		147		169	ps
	16 mA		100		105		120	ps
1.8-V LVTTL	2 mA		420		441		507	ps
	8 mA		350		368		423	ps
	12 mA		350		368		423	ps
1.5-V LVTTL	2 mA		1,740		1,827		2,101	ps
	4 mA		1,160		1,218		1,400	ps
	8 mA		690		725		833	ps
GTL			–150		–157		–181	ps

EP1SGX25DF1020C7 Intel IC FPGA 607 I/O 1020FBGA

Table 6–74. Stratix GX I/O Standard Output Delay Adders for Fast Slew Rate on Column Pins (Part 2 of 2)

Standard	-5 Speed Grade		-6 Speed Grade		-7 Speed Grade		Unit
	Min	Max	Min	Max	Min	Max	
GTL+		–110		–115		–133	ps
3.3-V PCI		–230		–241		–277	ps
3.3-V PCI-X 1.0		–230		–241		–277	ps
Compact PCI		–230		–241		–277	ps
AGP 1×		–30		–31		–36	ps
AGP 2×		–30		–31		–36	ps
CTT		50		53		61	ps
SSTL-3 class I		90		95		109	ps
SSTL-3 class II		–50		–52		–60	ps
SSTL-2 class I		100		105		120	ps
SSTL-2 class II		20		21		24	ps
SSTL-18 class I		230		242		278	ps
SSTL-18 class II		0		0		0	ps
1.5-V HSTL class I		380		399		459	ps
1.5-V HSTL class II		190		200		230	ps
1.8-V HSTL class I		380		399		459	ps
1.8-V HSTL class II		390		410		471	ps

Table 6–75. Stratix GX I/O Standard Output Delay Adders for Fast Slew Rate on Row Pins (Part 1 of 2)

Standard		-5 Speed Grade		-6 Speed Grade		-7 Speed Grade		Unit
		Min	Max	Min	Max	Min	Max	
LVCMOS	2 mA		570		599		689	ps
	4 mA		570		599		689	ps
	8 mA		350		368		423	ps
	12 mA		130		137		157	ps
	24 mA		0		0		0	ps
3.3-V LVTTL	4 mA		570		599		689	ps
	8 mA		350		368		423	ps
	12 mA		130		137		157	ps
	16 mA		70		74		85	ps
	24 mA		0		0		0	ps

EP1SGX25DF1020C7 Intel IC FPGA 607 I/O 1020FBGA

Table 6–75. Stratix GX I/O Standard Output Delay Adders for Fast Slew Rate on Row Pins (Part 2 of 2)

Standard		-5 Speed Grade		-6 Speed Grade		-7 Speed Grade		Unit
		Min	Max	Min	Max	Min	Max	
2.5-V LVTTL	2 mA		830		872		1,002	ps
	8 mA		250		263		302	ps
	12 mA		140		147		169	ps
	16 mA		100		105		120	ps
1.8-V LVTTL	2 mA		1,510		1,586		1,824	ps
	8 mA		420		441		507	ps
	12 mA		350		368		423	ps
1.5-V LVTTL	2 mA		1,740		1,827		2,101	ps
	4 mA		1,160		1,218		1,400	ps
	8 mA		690		725		833	ps
CTT			50		53		61	ps
SSTL-3 class I			90		95		109	ps
SSTL-3 class II			–50		–52		–60	ps
SSTL-2 class I			100		105		120	ps
SSTL-2 class II			20		21		24	ps
LVDS *(1)*			–20		–21		–24	ps
LVPECL *(1)*			40		42		48	ps
PCML *(1)*			–60		–63		–73	ps
HyperTransport Technology *(1)*			70		74		85	ps

Table 6–76. Stratix GX I/O Standard Output Delay Adders for Slow Slew Rate on Column Pins (Part 1 of 2)

I/O Standard		-5 Speed Grade		-6 Speed Grade		-7 Speed Grade		Unit
		Min	Max	Min	Max	Min	Max	
LVCMOS	2 mA		1,911		2,011		2,312	ps
	4 mA		1,911		2,011		2,312	ps
	8 mA		1,691		1,780		2,046	ps
	12 mA		1,471		1,549		1,780	ps
	24 mA		1,341		1,412		1,623	ps

EP1SGX25DF1020C7 Intel IC FPGA 607 I/O 1020FBGA

Table 6–76. Stratix GX I/O Standard Output Delay Adders for Slow Slew Rate on Column Pins (Part 2 of 2)

I/O Standard		-5 Speed Grade		-6 Speed Grade		-7 Speed Grade		Unit
		Min	Max	Min	Max	Min	Max	
3.3-V LVTTL	4 mA		1,993		2,097		2,411	ps
	8 mA		1,773		1,866		2,145	ps
	12 mA		1,553		1,635		1,879	ps
	16 mA		1,493		1,572		1,807	ps
	24 mA		1,423		1,498		1,722	ps
2.5-V LVTTL	2 mA		2,631		2,768		3,182	ps
	8 mA		2,051		2,159		2,482	ps
	12 mA		1,941		2,043		2,349	ps
	16 mA		1,901		2,001		2,300	ps
1.8-V LVTTL	2 mA		4,632		4,873		5,604	ps
	8 mA		3,542		3,728		4,287	ps
	12 mA		3,472		3,655		4,203	ps
1.5-V LVTTL	2 mA		6,620		6,964		8,008	ps
	4 mA		6,040		6,355		7,307	ps
	8 mA		5,570		5,862		6,740	ps
GTL			1,191		1,255		1,442	ps
GTL+			1,231		1,297		1,90	ps
3.3-V PCI			1,111		1,171		1,346	ps
3.3-V PCI-X 1.0			1,111		1,171		1,346	ps
Compact PCI			1,111		1,171		1,346	ps
AGP 1×			1,311		1,381		1,587	ps
AGP 2×			1,311		1,381		1,587	ps
CTT			1,391		1,465		1,684	ps
SSTL-3 class I			1,431		1,507		1,732	ps
SSTL-3 class II			1,291		1,360		1,563	ps
SSTL-2 class I			1,912		2,013		2,314	ps
SSTL-2 class II			1,832		1,929		2,218	ps
SSTL-18 class I			3,097		3,260		3,748	ps
SSTL-18 class II			2,867		3,018		3,470	ps
1.5-V HSTL class I			4,916		5,174		5,950	ps
1.5-V HSTL class II			4,726		4,975		5,721	ps
1.8-V HSTL class I			3,247		3,417		3,929	ps
1.8-V HSTL class II			3,257		3,428		3,941	ps

Table 6–77. Stratix GX I/O Standard Output Delay Adders for Slow Slew Rate on Row Pins

I/O Standard		-5 Speed Grade		-6 Speed Grade		-7 Speed Grade		Unit
		Min	Max	Min	Max	Min	Max	
LVCMOS	2 mA		1,930		2,031		2,335	ps
	4 mA		1,930		2,031		2,335	ps
	8 mA		1,710		1,800		2,069	ps
	12 mA		1,490		1,569		1,803	ps
3.3-V LVTTL	4 mA		1,953		2,055		2,363	ps
	8 mA		1,733		1,824		2,097	ps
	12 mA		1,513		1,593		1,831	ps
	16 mA		1,453		1,530		1,759	ps
2.5-V LVTTL	2 mA		2,632		2,769		3,183	ps
	8 mA		2,052		2,160		2,483	ps
	12 mA		1,942		2,044		2,350	ps
	16 mA		1,902		2,002		2,301	ps
1.8-V LVTTL	2 mA		4,537		4,773		5,489	ps
	8 mA		3,447		3,628		4,172	ps
	12 mA		3,377		3,555		4,088	ps
1.5-V LVTTL	2 mA		6,575		6,917		7,954	ps
	4 mA		5,995		6,308		7,253	ps
	8 mA		5,525		5,815		6,686	ps
CTT			1,410		1,485		1,707	ps
SSTL-3 class I			1,450		1,527		1,755	ps
SSTL-3 class II			1,310		1,380		1,586	ps
SSTL-2 class I			1,797		1,892		2,175	ps
SSTL-2 class II			1,717		1,808		2,079	ps
LVDS *(1)*			1,340		1,411		1,622	ps
LVPECL *(1)*			1,400		1,474		1,694	ps
3.3-V PCML *(1)*			1,300		1,369		1,573	ps
HyperTransport technology *(1)*			1,430		1,506		1,731	ps

Note to Tables 6–72 through 6–77:
(1) These parameters are only available on the left side row I/O pins.

EP1SGX25DF1020C7 Intel IC FPGA 607 I/O 1020FBGA

Tables 6–78 and 6–79 show the adder delays for the column and row IOE programmable delays, respectively. These delays are controlled with the Quartus II software logic options listed in the Parameter column.

Table 6–78. Stratix GX IOE Programmable Delays on Column Pins

Parameter	Setting	-5 Speed Grade		-6 Speed Grade		-7 Speed Grade		Unit
		Min	Max	Min	Max	Min	Max	
Decrease input delay to internal cells	Off		3,970		4,367		5,022	ps
	On		3,390		3,729		4,288	ps
	Small		2,810		3,091		3,554	ps
	Medium		212		224		257	ps
	Large		212		224		257	ps
Decrease input delay to input register	Off		3900		4,290		4,933	ps
	On		0		0		0	ps
Decrease input delay to output register	Off		1,240		1,364		1,568	ps
	On		0		0		0	ps
Increase delay to output pin	Off		0		0		0	ps
	On		377		397		456	ps
Increase delay to output enable pin	Off		0		0		0	ps
	On		338		372		427	ps
Increase output clock enable delay	Off		0		0		0	ps
	On		540		594		683	ps
	Small		1,016		1,118		1,285	ps
	Large		1,016		1,118		1,285	ps
Increase input clock enable delay	Off		0		0		0	ps
	On		540		594		683	ps
	Small		1,016		1,118		1,285	ps
	Large		1,016		1,118		1,285	ps
Increase output enable clock enable delay	Off		0		0		0	ps
	On		540		594		683	ps
	Small		1,016		1,118		1,285	ps
	Large		1,016		1,118		1,285	ps

EP1SGX25DF1020C7 Intel IC FPGA 607 I/O 1020FBGA

Table 6–79. Stratix GX IOE Programmable Delays on Row Pins

Parameter	Setting	-5 Speed Grade		-6 Speed Grade		-7 Speed Grade		Unit
		Min	Max	Min	Max	Min	Max	
Decrease input delay to internal cells	Off		3,970		4,367		5,022	ps
	On		3,390		3,729		4,288	ps
	Small		2,810		3,091		3,554	ps
	Medium		164		173		198	ps
	Large		164		173		198	ps
Decrease input delay to input register	Off		3,900		4,290		4,933	ps
	On		0		0		0	ps
Decrease input delay to output register	Off		1,240		1,364		1,568	ps
	On		0		0		0	ps
Increase delay to output pin	Off		0		0		0	ps
	On		377		397		456	ps
Increase delay to output enable pin	Off		0		0		0	ps
	On		348		383		441	ps
Increase output clock enable delay	Off		0		0		0	ps
	On		180		198		227	ps
	Small		260		286		328	ps
	Large		260		286		328	ps
Increase input clock enable delay	Off		0		0		0	ps
	On		180		198		227	ps
	Small		260		286		328	ps
	Large		260		286		328	ps
Increase output enable clock enable delay	Off		0		0		0	ps
	On		540		594		683	ps
	Small		1,016		1,118		1,285	ps
	Large		1,016		1,118		1,285	ps

EP1SGX25DF1020C7 Intel IC FPGA 607 I/O 1020FBGA

The scaling factors for output pin timing in Table 6–80 are shown in units of time per pF unit of capacitance (ps/pF). Add this delay to the combinational timing path for output or bidirectional pins in addition to the "I/O Adder" delays shown in Tables 6–72 through 6–77 and the "IOE Programmable Delays" in Tables 6–78 and 6–79.

Table 6–80. Output Delay Adder for Loading on LVTTL/LVCMOS Output Buffers

LVTTL/LVCMOS Standards						
Conditions		**Output Pin Adder Delay (ps/pF)**				
Parameter	**Value**	3.3-V LVTTL	2.5-V LVTTL	1.8-V LVTTL	1.5-V LVTTL	LVCMOS
Drive Strength	24 mA	15	–	–	-	8
	16 mA	25	18	–	–	–
	12 mA	30	25	25	–	15
	8 mA	50	35	40	35	20
	4 mA	60	–	–	80	30
	2 mA	–	75	120	160	60
SSTL/HSTL Standards						
Conditions		**Output Pin Adder Delay (ps/pF)**				
		SSTL-3	SSTL-2	SSTL-1.8	1.5-V HSTL	1.8-V HSTL
Class I		25	25	25	25	25
Class II		25	20	25	20	20
GTL+/GTL/CTT/PCI Standards						
Conditions		**Output Pin Adder Delay (ps/pF)**				
Parameter	**Value**	GTL+	GTL	CTT	PCI	AGP
V_{CCIO} voltage level	3.3 V	18	18	25	20	20
	2.5 V	15	18	-	-	-

EP1SGX25DF1020C7 Intel IC FPGA 607 I/O 1020FBGA

Maximum Input & Output Clock Rates

Tables 6–81 through 6–83 show the maximum input clock rate for column and row pins in Stratix GX devices.

Table 6–81. Stratix GX Maximum Input Clock Rate for CLK[7..4] & CLK[15..12] Pins

I/O Standard	-5 Speed Grade	-6 Speed Grade	-7 Speed Grade	Unit
LVTTL	422	422	390	MHz
2.5 V	422	422	390	MHz
1.8 V	422	422	390	MHz
1.5 V	422	422	390	MHz
LVCMOS	422	422	390	MHz
GTL	300	250	200	MHz
GTL+	300	250	200	MHz
SSTL-3 class I	400	350	300	MHz
SSTL-3 class II	400	350	300	MHz
SSTL-2 class I	400	350	300	MHz
SSTL-2 class II	400	350	300	MHz
SSTL-18 class I	400	350	300	MHz
SSTL-18 class II	400	350	300	MHz
1.5-V HSTL class I	400	350	300	MHz
1.5-V HSTL class II	400	350	300	MHz
1.8-V HSTL class I	400	350	300	MHz
1.8-V HSTL class II	400	350	300	MHz
3.3-V PCI	422	422	390	MHz
3.3-V PCI-X 1.0	422	422	390	MHz
Compact PCI	422	422	390	MHz
AGP 1×	422	422	390	MHz
AGP 2×	422	422	390	MHz
CTT	300	250	200	MHz
Differential HSTL	400	350	300	MHz
LVDS	645	645	622	MHz
LVPECL	645	645	622	MHz
PCML	300	275	275	MHz
HyperTransport technology	500	500	450	MHz

EP1SGX25DF1020C7 Intel IC FPGA 607 I/O 1020FBGA

Table 6–82. Stratix GX Maximum Input Clock Rate for CLK[0, 2, 9, 11] Pins & FPLL[8..7]CLK Pins

I/O Standard	-5 Speed Grade	-6 Speed Grade	-7 Speed Grade	Unit
LVTTL	422	422	390	MHz
2.5 V	422	422	390	MHz
1.8 V	422	422	390	MHz
1.5 V	422	422	390	MHz
LVCMOS	422	422	390	MHz
GTL	300	250	200	MHz
GTL+	300	250	200	MHz
SSTL-3 class I	400	350	300	MHz
SSTL-3 class II	400	350	300	MHz
SSTL-2 class I	400	350	300	MHz
SSTL-2 class II	400	350	300	MHz
SSTL-18 class I	400	350	300	MHz
SSTL-18 class II	400	350	300	MHz
1.5-V HSTL class I	400	350	300	MHz
1.5-V HSTL class II	400	350	300	MHz
1.8-V HSTL class I	400	350	300	MHz
1.8-V HSTL class II	400	350	300	MHz
3.3-V PCI	422	422	390	MHz
3.3-V PCI-X 1.0	422	422	390	MHz
Compact PCI	422	422	390	MHz
AGP 1×	422	422	390	MHz
AGP 2×	422	422	390	MHz
CTT	300	250	200	MHz
Differential HSTL	400	350	300	MHz
LVDS	717	717	640	MHz
LVPECL	717	717	640	MHz
PCML	400	375	350	MHz
HyperTransport technology	717	717	640	MHz

Table 6–83. Stratix GX Maximum Input Clock Rate for CLK[1, 3, 8, 10] Pins (Part 1 of 2)

I/O Standard	-5 Speed Grade	-6 Speed Grade	-7 Speed Grade	Unit
LVTTL	422	422	390	MHz
2.5 V	422	422	390	MHz

EP1SGX25DF1020C7 Intel IC FPGA 607 I/O 1020FBGA

Table 6–83. Stratix GX Maximum Input Clock Rate for CLK[1, 3, 8, 10] Pins (Part 2 of 2)

I/O Standard	-5 Speed Grade	-6 Speed Grade	-7 Speed Grade	Unit
1.8 V	422	422	390	MHz
1.5 V	422	422	390	MHz
LVCMOS	422	422	390	MHz
GTL	300	250	200	MHz
GTL+	300	250	200	MHz
SSTL-3 class I	400	350	300	MHz
SSTL-3 class II	400	350	300	MHz
SSTL-2 class I	400	350	300	MHz
SSTL-2 class II	400	350	300	MHz
SSTL-18 class I	400	350	300	MHz
SSTL-18 class II	400	350	300	MHz
1.5-V HSTL class I	400	350	300	MHz
1.5-V HSTL class II	400	350	300	MHz
1.8-V HSTL class I	400	350	300	MHz
1.8-V HSTL class II	400	350	300	MHz
3.3-V PCI	422	422	390	MHz
3.3-V PCI-X 1.0	422	422	390	MHz
Compact PCI	422	422	390	MHz
AGP 1×	422	422	390	MHz
AGP 2×	422	422	390	MHz
CTT	300	250	200	MHz
Differential HSTL	400	350	300	MHz
LVDS	645	645	640	MHz
LVPECL	645	645	640	MHz
PCML	300	275	275	MHz
HyperTransport technology	645	645	640	MHz

Tables 6–84 and 6–85 show the maximum output clock rate for column and row pins in Stratix GX devices.

Table 6–84. Stratix GX Maximum Output Clock Rate for PLL[5, 6, 11, 12] Pins (Part 1 of 2)

I/O Standard	-5 Speed Grade	-6 Speed Grade	-7 Speed Grade	Unit
LVTTL	350	300	250	MHz
2.5 V	350	300	300	MHz

EP1SGX25DF1020C7 Intel IC FPGA 607 I/O 1020FBGA

Table 6–84. Stratix GX Maximum Output Clock Rate for PLL[5, 6, 11, 12] Pins (Part 2 of 2)

I/O Standard	-5 Speed Grade	-6 Speed Grade	-7 Speed Grade	Unit
1.8 V	250	250	250	MHz
1.5 V	225	200	200	MHz
LVCMOS	350	300	250	MHz
GTL	200	167	125	MHz
GTL+	200	167	125	MHz
SSTL-3 class I	167	150	133	MHz
SSTL-3 class II	167	150	133	MHz
SSTL-2 class I	200	200	167	MHz
SSTL-2 class II	200	200	167	MHz
SSTL-18 class I	150	133	133	MHz
SSTL-18 class II	150	133	133	MHz
1.5-V HSTL class I	250	225	200	MHz
1.5-V HSTL class II	225	200	200	MHz
1.8-V HSTL class I	250	225	200	MHz
1.8-V HSTL class II	225	200	200	MHz
3.3-V PCI	350	300	250	MHz
3.3-V PCI-X 1.0	350	300	250	MHz
Compact PCI	350	300	250	MHz
AGP 1×	350	300	250	MHz
AGP 2×	350	300	250	MHz
CTT	200	200	200	MHz
Differential HSTL	225	200	200	MHz
Differential SSTL-2	200	200	167	MHz
LVDS	500	500	500	MHz
LVPECL	500	500	500	MHz
PCML	350	350	350	MHz
HyperTransport technology	350	350	350	MHz

Table 6–85. Stratix GX Maximum Output Clock Rate (Using I/O Pins) for PLL[1, 2] Pins (Part 1 of 2)

I/O Standard	-5 Speed Grade	-6 Speed Grade	-7 Speed Grade	Unit
LVTTL	400	350	300	MHz
2.5 V	400	350	300	MHz
1.8 V	400	350	300	MHz

EP1SGX25DF1020C7 Intel IC FPGA 607 I/O 1020FBGA

Table 6–85. Stratix GX Maximum Output Clock Rate (Using I/O Pins) for PLL[1, 2] Pins (Part 2 of 2)

I/O Standard	-5 Speed Grade	-6 Speed Grade	-7 Speed Grade	Unit
1.5 V	350	300	300	MHz
LVCMOS	400	350	300	MHz
GTL	200	167	125	MHz
GTL+	200	167	125	MHz
SSTL-3 class I	167	150	133	MHz
SSTL-3 class II	167	150	133	MHz
SSTL-2 class I	150	133	133	MHz
SSTL-2 class II	150	133	133	MHz
SSTL-18 class I	150	133	133	MHz
SSTL-18 class II	150	133	133	MHz
HSTL class I	250	225	200	MHz
HSTL class II	225	225	200	MHz
3.3-V PCI	250	225	200	MHz
3.3-V PCI-X 1.0	225	225	200	MHz
Compact PCI	400	350	300	MHz
AGP 1×	400	350	300	MHz
AGP 2×	400	350	300	MHz
CTT	300	250	200	MHz
Differential HSTL	225	225	200	MHz
LVDS	717	717	500	MHz
LVPECL	717	717	500	MHz
PCML	420	420	420	MHz
HyperTransport technology	420	420	420	MHz

High-Speed I/O Specification

Table 6–86 provides high-speed timing specifications definitions.

Table 6–86. High-Speed Timing Specifications & Definitions (Part 1 of 2)

High-Speed Timing Specification	Definitions
t_C	High-speed receiver/transmitter input and output clock period.
f_{HSCLK}	High-speed receiver/transmitter input and output clock frequency.
t_{RISE}	Low-to-high transmission time.

EP1SGX25DF1020C7 Intel IC FPGA 607 I/O 1020FBGA

Table 6–86. High-Speed Timing Specifications & Definitions (Part 2 of 2)

High-Speed Timing Specification	Definitions
t_{FALL}	High-to-low transmission time.
Timing unit interval (TUI)	The timing budget allowed for skew, propagation delays, and data sampling window. (TUI = 1/(Receiver Input Clock Frequency × Multiplication Factor) = t_C/w).
f_{HSDR}	Maximum/minimum LVDS data transfer rate (f_{HSDR} = 1/TUI), non-DPA.
$f_{HSDRDPA}$	Maximum/minimum LVDS data transfer rate ($f_{HSDRDPA}$ = 1/TUI), DPA.
Channel-to-channel skew (TCCS)	The timing difference between the fastest and slowest output edges, including t_{CO} variation and clock skew. The clock is included in the TCCS measurement.
Sampling window (SW)	The period of time during which the data must be valid in order to capture it correctly. The setup and hold times determine the ideal strobe position within the sampling window. SW = t_{SW} (max) – t_{SW} (min).
Input jitter (peak-to-peak)	Peak-to-peak input jitter on high-speed PLLs.
Output jitter (peak-to-peak)	Peak-to-peak output jitter on high-speed PLLs.
t_{DUTY}	Duty cycle on high-speed transmitter output clock.
t_{LOCK}	Lock time for high-speed transmitter and receiver PLLs.

Table 6–87 shows the high-speed I/O timing specifications for Stratix GX devices.

Table 6–87. High-Speed I/O Specifications (Part 1 of 4) *Notes (1), (2)*

Symbol	Conditions	-5 Speed Grade			-6 Speed Grade			-7 Speed Grade			Unit
		Min	Typ	Max	Min	Typ	Max	Min	Typ	Max	
f_{HSCLK} (Clock frequency) (LVDS, LVPECL, HyperTransport technology) f_{HSCLK} = f_{HSDR} / W	*W* = 1 to 30 for ≤717 Mbps W = 2 to 30 for > 717 Mbps	10		717	10		717	10		624	MHz
f_{HSCLK_DPA}		74		717	74		717	74		717	MHz

Table 6–87. High-Speed I/O Specifications (Part 2 of 4) *Notes (1), (2)*

Symbol	Conditions	-5 Speed Grade			-6 Speed Grade			-7 Speed Grade			Unit
		Min	Typ	Max	Min	Typ	Max	Min	Typ	Max	
f_{HSDR} Device operation (LVDS, LVPECL, HyperTransport technology)	*J* = 10	300		840	300		840	300		840	Mbps
	J = 8	300		840	300		840	300		840	Mbps
	J = 7	300		840	300		840	300		840	Mbps
	J = 4	300		840	300		840	300		840	Mbps
	J = 2	100		624	100		624	100		462	Mbps
	J = 1 (LVDS and LVPECL only)	100		462	100		462	100		462	Mbps
$f_{HSDRDPA}$ (LVDS, LVPECL)	J=10	300		1000	300		840	300		840	Mbps
	J=8	300		1000	300		840	300		840	Mbps
f_{HSCLK} (Clock frequency) (PCML) f_{HSCLK} = f_{HSDR} / W	*W* = 1 to 30	10		400	10		400	10		311	MHz
f_{HSDR} Device operation (PCML)	*J* = 10	300		400	300		400	300		311	Mbps
	J = 8	300		400	300		400	300		311	Mbps
	J = 7	300		400	300		400	300		311	Mbps
	J = 4	300		400	300		400	300		311	Mbps
	J = 2	100		400	100		400	100		300	Mbps
	J = 1	100		250	100		250	100		200	Mbps
DPA Run Length				6400			6400			6400	UI
DPA Jitter Tolerance$_{(p-p)}$	all data rates			0.44			0.44			0.44	UI
DPA Minimum Eye opening (p-p)		0.56			0.56			0.56			UI
DPA Receiver Latency		5		9	5		9	5		9	*(3)*

Table 6–87. High-Speed I/O Specifications (Part 3 of 4) *Notes (1), (2)*

Symbol	Conditions			-5 Speed Grade			-6 Speed Grade			-7 Speed Grade			Unit
				Min	Typ	Max	Min	Typ	Max	Min	Typ	Max	
DPA Lock Time	Standard	Training Pattern	Transition Density										
	SPI-4, CSIX	0000 0000 0011 1111 1111	10%	256			256			256			*(4)*
	Rapid IO	0000 1111	25%	256			256			256			*(4)*
		1001 0000	50%	256			256			256			*(4)*
	Misc	1010 1010	100 %	256			256			256			*(4)*
		0101 0101		256			256			256			*(4)*
TCCS	All					200			200			300	ps
SW	PCML (J = 4, 7, 8, 10)			750			750			800			ps
	PCML (J = 2)			900			900			1,200			ps
	PCML (J = 1)			1,500			1,500			1,700			ps
	LVDS and LVPECL (J = 1)			500			500			550			ps
	LVDS, LVPECL, HyperTransport technology (J = 2 through 10)			440			440			500			ps
Input jitter tolerance (peak-to-peak)	All					250			250			250	ps
Output jitter (peak-to-peak)	All					160			160			200	ps
Output t_{RISE}	LVDS			80	110	120	80	110	120	80	110	120	ps
	HyperTransport technology			110	170	200	110	170	200	120	170	200	ps
	LVPECL			90	130	150	90	130	150	100	135	150	ps
	PCML			80	110	135	80	110	135	80	110	135	ps

Table 6–87. High-Speed I/O Specifications (Part 4 of 4) *Notes (1), (2)*

Symbol	Conditions	-5 Speed Grade			-6 Speed Grade			-7 Speed Grade			Unit
		Min	Typ	Max	Min	Typ	Max	Min	Typ	Max	
Output t_{FALL}	LVDS	80	110	120	80	110	120	80	110	120	ps
	HyperTransport technology	110	170	200	110	170	200	110	170	200	ps
	LVPECL	90	130	160	90	130	160	100	135	160	ps
	PCML	105	140	175	105	140	175	110	145	175	ps
t_{DUTY}	LVDS (*J* = 2 through 10)	47.5	50	52.5	47.5	50	52.5	47.5	50	52.5	%
	LVDS (*J* =1) and LVPECL, PCML, HyperTransport technology	45	50	55	45	50	55	45	50	55	%
t_{LOCK}	All			100			100			100	µs

Notes to Table 6–87:
(1) When J = 4, 7, 8, and 10, the SERDES block is used.
(2) When J = 2 or J = 1, the SERDES is bypassed.
(3) Number of parallel CLK cycles.
(4) Number of repetitions.

PLL Timing

Tables 6–88 through 6–90 describe the Stratix GX device enhanced PLL specifications.

Table 6–88. Enhanced PLL Specifications for -5 Speed Grades (Part 1 of 2)

Symbol	Parameter	Min	Typ	Max	Unit
f_{IN}	Input clock frequency	3 *(1)*		684	MHz
f_{INDUTY}	Input clock duty cycle	40		60	%
$f_{EINDUTY}$	External feedback clock input duty cycle	40		60	%
$t_{INJITTER}$	Input clock period jitter			±200 *(2)*	ps
$t_{EINJITTER}$	External feedback clock period jitter			±200 *(2)*	ps
t_{FCOMP}	External feedback clock compensation time *(3)*			6	ns
f_{OUT}	Output frequency for internal global or regional clock	0.3		500	MHz
f_{OUT_EXT}	Output frequency for external clock *(2)*	0.3		526	MHz

EP1SGX25DF1020C7 Intel IC FPGA 607 I/O 1020FBGA

Table 6–88. Enhanced PLL Specifications for -5 Speed Grades (Part 2 of 2)

Symbol	Parameter	Min	Typ	Max	Unit
$t_{OUTDUTY}$	Duty cycle for external clock output (when set to 50%)	45		55	%
t_{JITTER}	Period jitter for external clock output *(5)*			±100 ps for >200 MHz `outclk` ±20 mUI for <200 MHz `outclk`	ps or mUI
$t_{CONFIG5,6}$	Time required to reconfigure the scan chains for PLLs 5 and 6			$289/f_{SCANCLK}$	
$t_{CONFIG11,12}$	Time required to reconfigure the scan chains for PLLs 11 and 12			$193/f_{SCANCLK}$	
$t_{SCANCLK}$	`scanclk` frequency *(4)*			22	MHz
t_{DLOCK}	Time required to lock dynamically (after switchover or reconfiguring any non-post-scale counters/delays) *(6)*			100	µs
t_{LOCK}	Time required to lock from end of device configuration	10		400	µs
f_{VCO}	PLL internal VCO operating range	300		800 *(7)*	MHz
t_{LSKEW}	Clock skew between two external clock outputs driven by the same counter		±50		ps
t_{SKEW}	Clock skew between two external clock outputs driven by the different counters with the same settings		±75		ps
f_{SS}	Spread spectrum modulation frequency	30		150	kHz
% spread	Percentage spread for spread spectrum frequency *(9)*	0.4	0.5	0.6	%
t_{ARESET}	Minimum pulse width on `areset` signal	10			ns

Table 6–89. Enhanced PLL Specifications for -6 Speed Grades (Part 1 of 2)

Symbol	Parameter	Min	Typ	Max	Unit
f_{IN}	Input clock frequency	3 *(1)*		650	MHz
f_{INDUTY}	Input clock duty cycle	40		60	%
$f_{EINDUTY}$	External feedback clock input duty cycle	40		60	%
$t_{INJITTER}$	Input clock period jitter			±200 *(2)*	ps
$t_{EINJITTER}$	External feedback clock period jitter			±200 *(2)*	ps
t_{FCOMP}	External feedback clock compensation time *(3)*			6	ns

EP1SGX25DF1020C7 Intel IC FPGA 607 I/O 1020FBGA

Table 6–89. Enhanced PLL Specifications for -6 Speed Grades (Part 2 of 2)

Symbol	Parameter	Min	Typ	Max	Unit
f_{OUT}	Output frequency for internal global or regional clock	0.3		450	MHz
f_{OUT_EXT}	Output frequency for external clock *(2)*	0.3		500	MHz
$t_{OUTDUTY}$	Duty cycle for external clock output (when set to 50%)	45		55	%
t_{JITTER}	Period jitter for external clock output *(5)*			±100 ps for >200 MHz `outclk` ±20 mUI for <200 MHz `outclk`	ps or mUI
$t_{CONFIG5,6}$	Time required to reconfigure the scan chains for PLLs 5 and 6			$289/f_{SCANCLK}$	
$t_{CONFIG11,12}$	Time required to reconfigure the scan chains for PLLs 11 and 12			$193/f_{SCANCLK}$	
$t_{SCANCLK}$	`scanclk` frequency *(4)*			22	MHz
t_{DLOCK}	Time required to lock dynamically (after switchover or reconfiguring any non-post-scale counters/delays) *(6)* *(10)*	*(8)*		100	µs
t_{LOCK}	Time required to lock from end of device configuration *(10)*	10		400	µs
f_{VCO}	PLL internal VCO operating range	300		800 *(7)*	MHz
t_{LSKEW}	Clock skew between two external clock outputs driven by the same counter		±50		ps
t_{SKEW}	Clock skew between two external clock outputs driven by the different counters with the same settings		±75		ps
f_{SS}	Spread spectrum modulation frequency	30		150	kHz
% spread	Percentage spread for spread spectrum frequency *(9)*	0.4	0.5	0.6	%
t_{ARESET}	Minimum pulse width on `areset` signal	10			ns

Table 6–90. Enhanced PLL Specifications for -7 Speed Grade (Part 1 of 3)

Symbol	Parameter	Min	Typ	Max	Unit
f_{IN}	Input clock frequency	3 *(1)*		565	MHz
f_{INDUTY}	Input clock duty cycle	40		60	%
$f_{EINDUTY}$	External feedback clock input duty cycle	40		60	%
$t_{INJITTER}$	Input clock period jitter			±200 *(2)*	ps
$t_{EINJITTER}$	External feedback clock period jitter			±200 *(2)*	ps

EP1SGX25DF1020C7 Intel IC FPGA 607 I/O 1020FBGA

Table 6–90. Enhanced PLL Specifications for -7 Speed Grade (Part 2 of 3)

Symbol	Parameter	Min	Typ	Max	Unit
t_{FCOMP}	External feedback clock compensation time *(3)*			6	ns
f_{OUT}	Output frequency for internal global or regional clock	0.3		420	MHz
f_{OUT_EXT}	Output frequency for external clock *(2)*	0.3		434	MHz
$t_{OUTDUTY}$	Duty cycle for external clock output (when set to 50%)	45		55	%
t_{JITTER}	Period jitter for external clock output *(5)*			±100 ps for >200 MHz `outclk` ±20 mUI for <200 MHz `outclk`	ps or mUI
$t_{CONFIG5,6}$	Time required to reconfigure the scan chains for PLLs 5 and 6			$289/f_{SCANCLK}$	
$t_{CONFIG11,12}$	Time required to reconfigure the scan chains for PLLs 11 and 12			$193/f_{SCANCLK}$	
$t_{SCANCLK}$	`scanclk` frequency *(4)*			22	MHz
t_{DLOCK}	Time required to lock dynamically (after switchover or reconfiguring any non-post-scale counters/delays) *(6)* *(10)*	*(8)*		100	µs
t_{LOCK}	Time required to lock from end of device configuration *(10)*	10		400	µs
f_{VCO}	PLL internal VCO operating range	300		600 *(7)*	MHz

Table 6–90. Enhanced PLL Specifications for -7 Speed Grade (Part 3 of 3)

Symbol	Parameter	Min	Typ	Max	Unit
t_{LSKEW}	Clock skew between two external clock outputs driven by the same counter		±50		ps
t_{SKEW}	Clock skew between two external clock outputs driven by the different counters with the same settings		±75		ps
f_{SS}	Spread spectrum modulation frequency	30		150	kHz
% spread	Percentage spread for spread spectrum frequency *(9)*	0.5		0.6	%
t_{ARESET}	Minimum pulse width on `areset` signal	10			ns

Notes to Tables 6–88 through 6–90:

(1) The minimum input clock frequency to the PFD (f_{IN}/N) must be at least 3 MHz for Stratix device enhanced PLLs.
(2) See "Maximum Input & Output Clock Rates" on page 6–54.
(3) t_{FCOMP} can also equal 50% of the input clock period multiplied by the pre-scale divider *n* (whichever is less).
(4) This parameter is timing analyzed by the Quartus II software because the `scanclk` and `scandata` ports can be driven by the logic array.
(5) Actual jitter performance may vary based on the system configuration.
(6) Total required time to reconfigure and lock is equal to $t_{DLOCK} + t_{CONFIG}$. If only post-scale counters and delays are changed, then t_{DLOCK} is equal to 0.
(7) The VCO range is limited to 500 to 800 MHz when the spread spectrum feature is selected.
(8) Lock time is a function of PLL configuration and may be significantly faster depending on bandwidth settings or feedback counter change increment.
(9) Exact, user-controllable value depends on the PLL settings.
(10) The LOCK circuit on Stratix PLLs does not work for industrial devices below -20C unless the PFD frequency > 200 MHz. See the *Stratix FPGA Errata Sheet* for more information on the PLL.

EP1SGX25DF1020C7 Intel IC FPGA 607 I/O 1020FBGA

Table 6–91 describes the Stratix GX device fast PLL specifications.

Table 6–91. Fast PLL Specifications for -5 & -6 Speed Grade Devices

Symbol	Parameter	Min	Max	Unit
f_{IN}	CLKIN frequency (for *m* = 1) *(1)*	300	717	MHz
	CLKIN frequency (for *m* = 2 to 19)	300/*m*	1,000/*m*	MHz
	CLKIN frequency (for *m* = 20 to 32)	10	1,000/*m*	MHz
f_{OUT}	Output frequency for internal global or regional clock *(2)*	9.4	420	MHz
f_{OUT_EXT}	Output frequency for external clock	9.375	717	MHz
f_{VCO}	VCO operating frequency	300	1,000	MHz
t_{INDUTY}	CLKIN duty cycle	40	60	%
$t_{INJITTER}$	Period jitter for CLKIN pin		±200	ps
t_{DUTY}	Duty cycle for DFFIO 1× CLKOUT pin *(3)*	45	55	%
t_{JITTER}	Period jitter for DIFFIO clock out *(3)*		±80	ps
	Period jitter for internal global or regional clock		±100 ps for >200-MHz outclk ±20 mUI for <200-MHz outclk	ps or mUI
t_{LOCK}	Time required for PLL to acquire lock	10	100	µs
m	Multiplication factors for *m* counter *(3)*	1	32	Integer
*l*0, *l*1, *g*0	Multiplication factors for *l*0, *l*1, and *g*0 counter *(4)*, *(5)*	1	32	Integer
t_{ARESET}	Minimum pulse width on areset signal	10		ns

Table 6–92. Fast PLL Specifications for -7 & -8 Speed Grades (Part 1 of 2)

Symbol	Parameter	Min	Max	Unit
f_{IN}	CLKIN frequency (for *m* = 1) *(1)*,	300	640	MHz
	CLKIN frequency (for *m* = 2 to 19)	300/*m*	700/*m*	MHz
	CLKIN frequency (for *m* = 20 to 32)	10	700/*m*	MHz
f_{OUT}	Output frequency for internal global or regional clock *(2)*	9.375	420	MHz
f_{OUT_EXT}	Output frequency for external clock	9.4	500	MHz
f_{VCO}	VCO operating frequency	300	700	MHz
t_{INDUTY}	CLKIN duty cycle	40	60	%
$t_{INJITTER}$	Period jitter for CLKIN pin		±200	ps

EP1SGX25DF1020C7 Intel IC FPGA 607 I/O 1020FBGA

Table 6–92. Fast PLL Specifications for -7 & -8 Speed Grades (Part 2 of 2)				
Symbol	**Parameter**	**Min**	**Max**	**Unit**
t_{DUTY}	Duty cycle for DFFIO 1× CLKOUT pin *(3)*	45	55	%
t_{JITTER}	Period jitter for DIFFIO clock out *(3)*		±80	ps
	Period jitter for internal global or regional clock		±100 ps for >200 MHz outclk ±20 mUI for <200 MHz outclk	ps or mUI
t_{LOCK}	Time required for PLL to acquire lock	10	100	µs
m	Multiplication factors for *m* counter *(4)*	1	32	Integer
*l*0, *l*1, *g*0	Multiplication factors for *l*0, *l*1, and *g*0 counter *(4)*, *(5)*	1	32	Integer
t_{ARESET}	Minimum pulse width on areset signal	10		ns

Notes to Tables 6–91 & 6–92:

(1) See "Maximum Input & Output Clock Rates" on page 6–54.
(2) When using the SERDES, high-speed differential I/O mode supports a maximum output frequency of 210 MHz to the global or regional clocks (that is, the maximum data rate 840 Mbps divided by the smallest SERDES J factor of 4).
(3) This parameter is for high-speed differential I/O mode only.
(4) These counters have a maximum of 32 if programmed for 50/50 duty cycle. Otherwise, they have a maximum of 16.
(5) High-speed differential I/O mode supports $W = 1$ to 16 and $J = 4, 7, 8$, or 10.

DLL Jitter

Table 6–93 reports the jitter for the DLL in the DQS phase-shift reference circuit.

Table 6–93. DLL Jitter for DQS Phase Shift Reference Circuit	
Frequency (MHz)	**DLL Jitter (ps)**
197 to 200	± 100
160 to 196	± 300
100 to 159	± 500

7. Reference & Ordering Information

SGX51007-1.0

Software

Stratix® GX devices are supported by the Altera® Quartus® II design software, which provides a comprehensive environment for system-on-a-programmable-chip (SOPC) design. The Quartus II software includes hardware description language and schematic design entry, compilation and logic synthesis, full simulation and advanced timing analysis, SignalTap® logic analysis, and device configuration. See the *Design Software Selector Guide* for more details on the Quartus II software features.

The Quartus II software supports the Windows 2000/NT/98, Sun Solaris, Linux Red Hat v6.2 and HP-UX operating systems. It also supports seamless integration with industry-leading EDA tools through the NativeLink® interface.

Device Pin-Outs

Device pin-outs for Stratix GX devices will be released on the Altera web site (**www.altera.com**).

Ordering Information

Figure 7–1 describes the ordering codes for Stratix GX devices.

Figure 7–1. Stratix GX Device Packaging Ordering Information

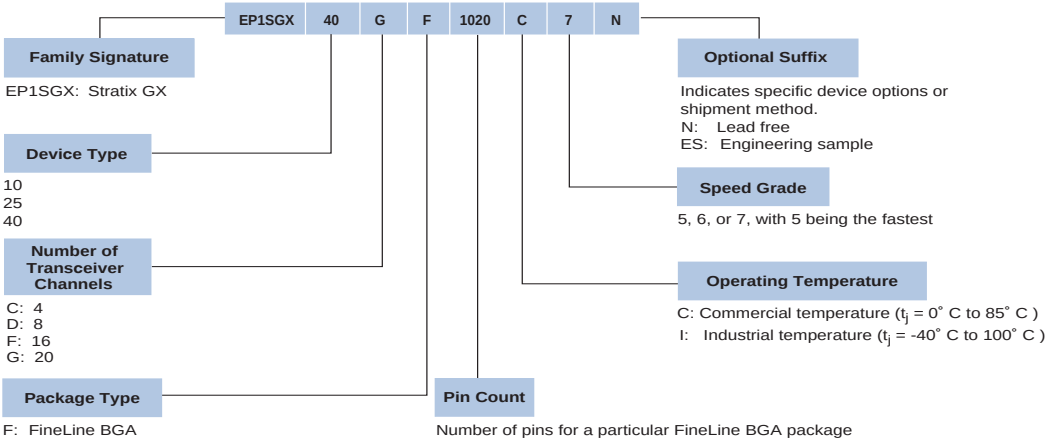

EP1SGX25DF1020C7 Intel IC FPGA 607 I/O 1020FBGA

FPGAMALL
Authorized Distributor

OUR CERTIFICATE

A long-term cooperative relationship can be built between global customers and us by providing excellent products

Business Type	Trading Company, Distributor/Wholesaler
Main Products	Electronic Integrated Circuit
Certifications	ISO9001
Total Annual Revenue	US$2.5 Million - US$5 Million
Country / Region	Hongkong, China
Total Employees	100 - 200 People
Year Established	2018
Main Markets	North America South Asia Western Europe

sales@fpgamall.com
+00852-56428680