FPGAMALL
Authorized Distributor

https://www.fpgamall.com

THE DATASHEET OF FPGA

sales@fpgamall.com
+00852-56428680

1. Overview for the Stratix IV Device Family

SIV51001-3.5

Altera® Stratix® IV FPGAs deliver a breakthrough level of system bandwidth and power efficiency for high-end applications, allowing you to innovate without compromise. Stratix IV FPGAs are based on the Taiwan Semiconductor Manufacturing Company (TSMC) 40-nm process technology and surpass all other high-end FPGAs, with the highest logic density, most transceivers, and lowest power requirements.

The Stratix IV device family contains three optimized variants to meet different application requirements:

- Stratix IV E (Enhanced) FPGAs—up to 813,050 logic elements (LEs), 33,294 kilobits (Kb) RAM, and 1,288 18 x 18 bit multipliers
- Stratix IV GX transceiver FPGAs—up to 531,200 LEs, 27,376 Kb RAM, 1,288 18 x 18-bit multipliers, and 48 full-duplex clock data recovery (CDR)-based transceivers at up to 8.5 Gbps
- Stratix IV GT—up to 531,200 LEs, 27,376 Kb RAM, 1,288 18 x 18-bit multipliers, and 48 full-duplex CDR-based transceivers at up to 11.3 Gbps

The complete Altera high-end solution includes the lowest risk, lowest total cost path to volume using HardCopy® IV ASICs for all the family variants, a comprehensive portfolio of application solutions customized for end-markets, and the industry leading Quartus® II software to increase productivity and performance.

For information about upcoming Stratix IV device features, refer to the *Upcoming Stratix IV Device Features* document.

For information about changes to the currently published *Stratix IV Device Handbook*, refer to the *Addendum to the Stratix IV Device Handbook* chapter.

This chapter contains the following sections:

- "Feature Summary" on page 1–2
- "Architecture Features" on page 1–6
- "Integrated Software Platform" on page 1–19
- "Ordering Information" on page 1–19

© 2016 Altera Corporation. All rights reserved. ALTERA, ARRIA, CYCLONE, HARDCOPY, MAX, MEGACORE, NIOS, QUARTUS and STRATIX words and logos are trademarks of Altera Corporation and registered in the U.S. Patent and Trademark Office and in other countries. All other words and logos identified as trademarks or service marks are the property of their respective holders as described at www.altera.com/common/legal.html. Altera warrants performance of its semiconductor products to current specifications in accordance with Altera's standard warranty, but reserves the right to make changes to any products and services at any time without notice. Altera assumes no responsibility or liability arising out of the application or use of any information, product, or service described herein except as expressly agreed to in writing by Altera. Altera customers are advised to obtain the latest version of device specifications before relying on any published information and before placing orders for products or services.

ISO 9001:2008 Registered

EP4SGX290FH29C2X Intel IC FPGA 289 I/O 780HBGA

Feature Summary

The following list summarizes the Stratix IV device family features:

- Up to 48 full-duplex CDR-based transceivers in Stratix IV GX and GT devices supporting data rates up to 8.5 Gbps and 11.3 Gbps, respectively
- Dedicated circuitry to support physical layer functionality for popular serial protocols, such as PCI Express (PCIe) (PIPE) Gen1 and Gen2, Gbps Ethernet (GbE), Serial RapidIO, SONET/SDH, XAUI/HiGig, (OIF) CEI-6G, SD/HD/3G-SDI, Fibre Channel, SFI-5, and Interlaken
- Complete PCIe protocol solution with embedded PCIe hard IP blocks that implement PHY-MAC layer, Data Link layer, and Transaction layer functionality

  For more information, refer to the *IP Compiler for PCI Express User Guide*.

- Programmable transmitter pre-emphasis and receiver equalization circuitry to compensate for frequency-dependent losses in the physical medium
- Typical physical medium attachment (PMA) power consumption of 100 mW at 3.125 Gbps and 135 mW at 6.375 Gbps per channel
- 72,600 to 813,050 equivalent LEs per device
- 7,370 to 33,294 Kb of enhanced TriMatrix memory consisting of three RAM block sizes to implement true dual-port memory and FIFO buffers
- High-speed digital signal processing (DSP) blocks configurable as 9 x 9-bit, 12 x 12-bit, 18 x 18-bit, and 36 x 36-bit full-precision multipliers at up to 600 MHz
- Up to 16 global clocks (GCLK), 88 regional clocks (RCLK), and 132 periphery clocks (PCLK) per device
- Programmable power technology that minimizes power while maximizing device performance
- Up to 1,120 user I/O pins arranged in 24 modular I/O banks that support a wide range of single-ended and differential I/O standards
- Support for high-speed external memory interfaces including DDR, DDR2, DDR3 SDRAM, RLDRAM II, QDR II, and QDR II+ SRAM on up to 24 modular I/O banks
- High-speed LVDS I/O support with serializer/deserializer (SERDES), dynamic phase alignment (DPA), and soft-CDR circuitry at data rates up to 1.6 Gbps
- Support for source-synchronous bus standards, including SGMII, GbE, SPI-4 Phase 2 (POS-PHY Level 4), SFI-4.1, XSBI, UTOPIA IV, NPSI, and CSIX-L1
- Pinouts for Stratix IV E devices designed to allow migration of designs from Stratix III to Stratix IV E with minimal PCB impact

EP4SGX290FH29C2X Intel IC FPGA 289 I/O 780HBGA

Stratix IV GX Devices

Stratix IV GX devices provide up to 48 full-duplex CDR-based transceiver channels per device:

- Thirty-two out of the 48 transceiver channels have dedicated physical coding sublayer (PCS) and physical medium attachment (PMA) circuitry and support data rates between 600 Mbps and 8.5 Gbps
- The remaining 16 transceiver channels have dedicated PMA-only circuitry and support data rates between 600 Mbps and 6.5 Gbps

The actual number of transceiver channels per device varies with device selection. For more information about the exact transceiver count in each device, refer to Table 1–1 on page 1–11.

For more information about transceiver architecture, refer to the *Transceiver Architecture in Stratix IV Devices* chapter.

Figure 1–1 shows a high-level Stratix IV GX chip view.

Figure 1–1. Stratix IV GX Chip View *(1)*

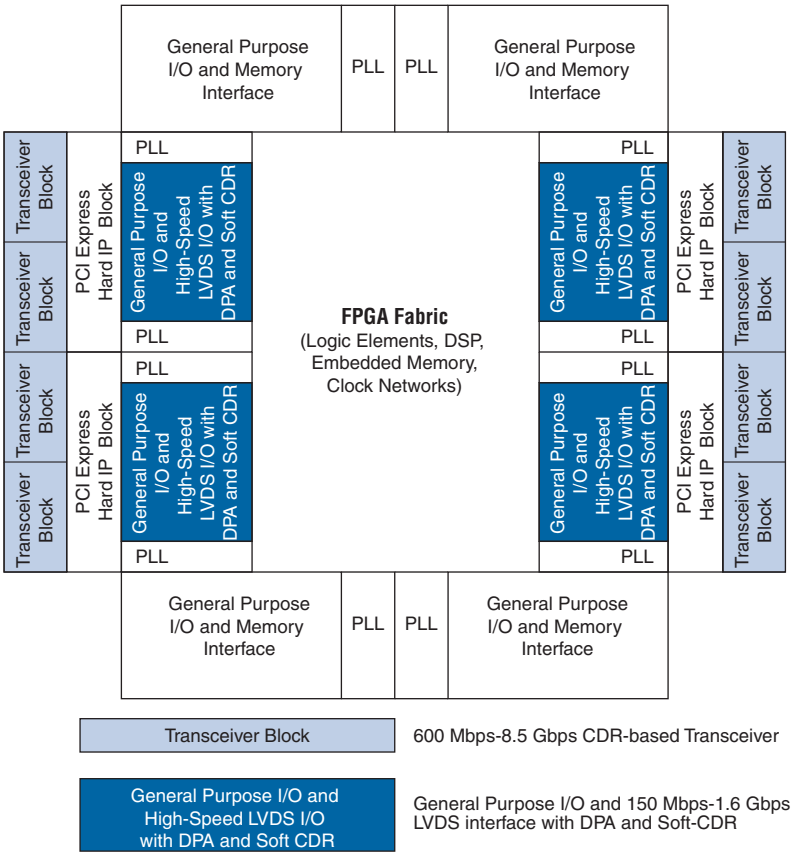

Note to Figure 1–1:

(1) Resource counts vary with device selection, package selection, or both.

EP4SGX290FH29C2X Intel IC FPGA 289 I/O 780HBGA

Stratix IV E Device

Stratix IV E devices provide an excellent solution for applications that do not require high-speed CDR-based transceivers, but are logic, user I/O, or memory intensive.

Figure 1–2 shows a high-level Stratix IV E chip view.

Figure 1–2. Stratix IV E Chip View *(1)*

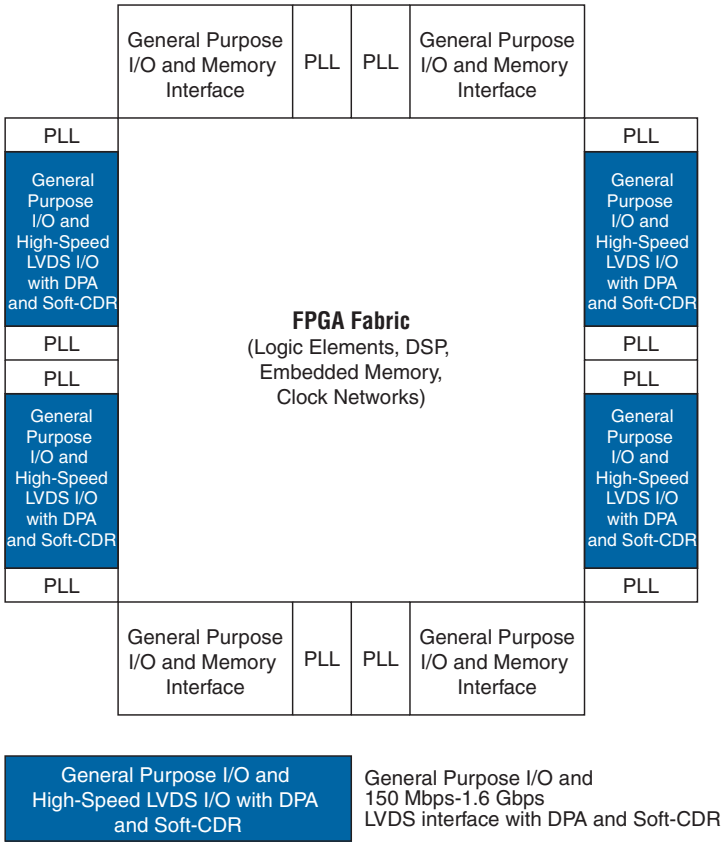

Note to Figure 1–2:

(1) Resource counts vary with device selection, package selection, or both.

EP4SGX290FH29C2X Intel IC FPGA 289 I/O 780HBGA

Stratix IV GT Devices

Stratix IV GT devices provide up to 48 CDR-based transceiver channels per device:

- Thirty-two out of the 48 transceiver channels have dedicated PCS and PMA circuitry and support data rates between 600 Mbps and 11.3 Gbps
- The remaining 16 transceiver channels have dedicated PMA-only circuitry and support data rates between 600 Mbps and 6.5 Gbps

The actual number of transceiver channels per device varies with device selection. For more information about the exact transceiver count in each device, refer to Table 1–7 on page 1–16.

For more information about Stratix IV GT devices and transceiver architecture, refer to the *Transceiver Architecture in Stratix IV Devices* chapter.

Figure 1–3 shows a high-level Stratix IV GT chip view.

Figure 1–3. Stratix IV GT Chip View *(1)*

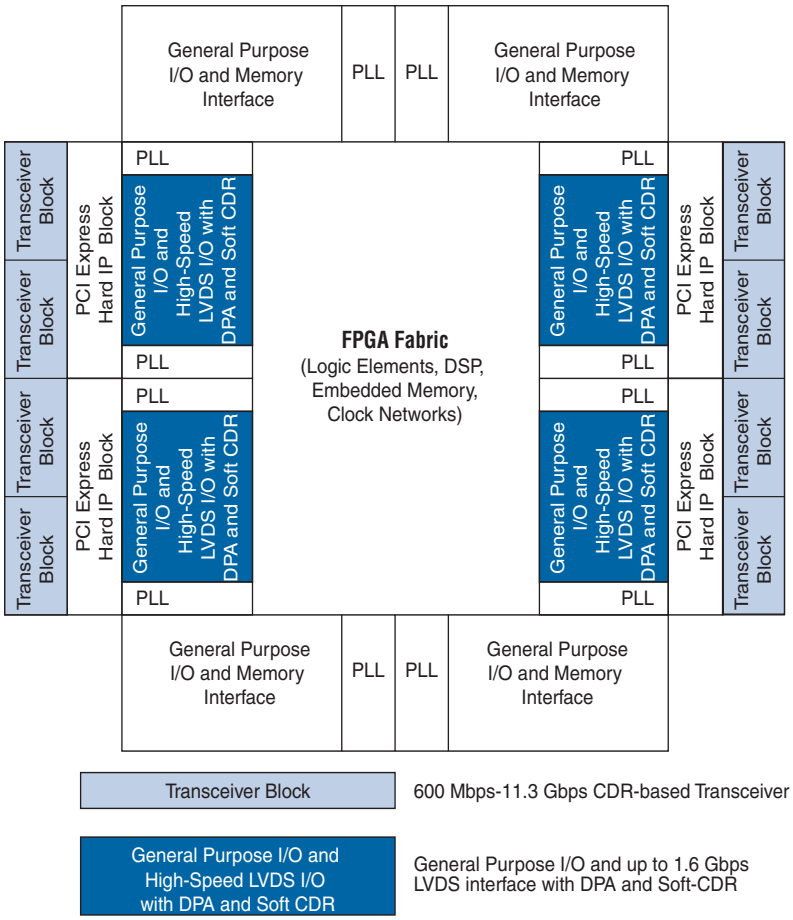

Note to Figure 1–3:

(1) Resource counts vary with device selection, package selection, or both.

EP4SGX290FH29C2X Intel IC FPGA 289 I/O 780HBGA

Architecture Features

The Stratix IV device family features are divided into high-speed transceiver features and FPGA fabric and I/O features.

The high-speed transceiver features apply only to Stratix IV GX and Stratix IV GT devices.

High-Speed Transceiver Features

The following sections describe high-speed transceiver features for Stratix IV GX and GT devices.

Highest Aggregate Data Bandwidth

Up to 48 full-duplex transceiver channels supporting data rates up to 8.5 Gbps in Stratix IV GX devices and up to 11.3 Gbps in Stratix IV GT devices.

Wide Range of Protocol Support

Physical layer support for the following serial protocols:

- Stratix IV GX—PCIe Gen1 and Gen2, GbE, Serial RapidIO, SONET/SDH, XAUI/HiGig, (OIF) CEI-6G, SD/HD/3G-SDI, Fibre Channel, SFI-5, GPON, SAS/SATA, HyperTransport 1.0 and 3.0, and Interlaken
- Stratix IV GT—40G/100G Ethernet, SFI-S, Interlaken, SFI-5.1, Serial RapidIO, SONET/SDH, XAUI/HiGig, (OIF) CEI-6G, 3G-SDI, and Fibre Channel
- Extremely flexible and easy-to-configure transceiver data path to implement proprietary protocols
- PCIe Support
  - Complete PCIe Gen1 and Gen2 protocol stack solution compliant to PCI Express base specification 2.0 that includes PHY-MAC, Data Link, and transaction layer circuitry embedded in PCI Express hard IP blocks

    For more information, refer to the *PCI Express Compiler User Guide*.

  - Root complex and end-point applications
  - x1, x4, and x8 lane configurations
  - PIPE 2.0-compliant interface
  - Embedded circuitry to switch between Gen1 and Gen2 data rates
  - Built-in circuitry for electrical idle generation and detection, receiver detect, power state transitions, lane reversal, and polarity inversion
  - 8B/10B encoder and decoder, receiver synchronization state machine, and ± 300 parts per million (ppm) clock compensation circuitry
  - Transaction layer support for up to two virtual channels (VCs)

EP4SGX290FH29C2X Intel IC FPGA 289 I/O 780HBGA

- XAUI/HiGig Support
  - Compliant to IEEE802.3ae specification
  - Embedded state machine circuitry to convert XGMII idle code groups (||I||) to and from idle ordered sets (||A||, ||K||, ||R||) at the transmitter and receiver, respectively
  - 8B/10B encoder and decoder, receiver synchronization state machine, lane deskew, and ± 100 ppm clock compensation circuitry
- GbE Support
  - Compliant to IEEE802.3-2005 specification
  - Automatic idle ordered set (/I1/, /I2/) generation at the transmitter, depending on the current running disparity
  - 8B/10B encoder and decoder, receiver synchronization state machine, and ± 100 ppm clock compensation circuitry
- Support for other protocol features such as MSB-to-LSB transmission in SONET/SDH configuration and spread-spectrum clocking in PCIe configurations

Diagnostic Features

- Serial loopback from the transmitter serializer to the receiver CDR for transceiver PCS and PMA diagnostics
- Reverse serial loopback pre- and post-CDR to transmitter buffer for physical link diagnostics
- Loopback master and slave capability in PCI Express hard IP blocks

For more information, refer to the *PCI Express Compiler User Guide*.

Signal Integrity

Stratix IV devices simplify the challenge of signal integrity through a number of chip, package, and board-level enhancements to enable efficient high-speed data transfer into and out of the device. These enhancements include:

- Programmable 3-tap transmitter pre-emphasis with up to 8,192 pre-emphasis levels to compensate for pre-cursor and post-cursor inter-symbol interference (ISI)
- Up to 900% boost capability on the first pre-emphasis post-tap
- User-controlled and adaptive 4-stage receiver equalization with up to 16 dB of high-frequency gain
- On-die power supply regulators for transmitter and receiver phase-locked loop (PLL) charge pump and voltage controlled oscillator (VCO) for superior noise immunity
- On-package and on-chip power supply decoupling to satisfy transient current requirements at higher frequencies, thereby reducing the need for on-board decoupling capacitors
- Calibration circuitry for transmitter and receiver on-chip termination (OCT) resistors

EP4SGX290FH29C2X Intel IC FPGA 289 I/O 780HBGA

FPGA Fabric and I/O Features

The following sections describe the Stratix IV FPGA fabric and I/O features.

Device Core Features

- Up to 531,200 LEs in Stratix IV GX and GT devices and up to 813,050 LEs in Stratix IV E devices, efficiently packed in unique and innovative adaptive logic modules (ALMs)
- Ten ALMs per logic array block (LAB) deliver faster performance, improved logic utilization, and optimized routing
- Programmable power technology, including a variety of process, circuit, and architecture optimizations and innovations
- Programmable power technology available to select power-driven compilation options for reduced static power consumption

Embedded Memory

- TriMatrix embedded memory architecture provides three different memory block sizes to efficiently address the needs of diversified FPGA designs:
  - 640-bit MLAB
  - 9-Kb M9K
  - 144-Kb M144K
- Up to 33,294 Kb of embedded memory operating at up to 600 MHz
- Each memory block is independently configurable to be a single- or dual-port RAM, FIFO, ROM, or shift register

Digital Signal Processing (DSP) Blocks

- Flexible DSP blocks configurable as 9 x 9-bit, 12 x 12-bit, 18 x 18-bit, and 36 x 36-bit full-precision multipliers at up to 600 MHz with rounding and saturation capabilities
- Faster operation due to fully pipelined architecture and built-in addition, subtraction, and accumulation units to combine multiplication results
- Optimally designed to support advanced features such as adaptive filtering, barrel shifters, and finite and infinite impulse response (FIR and IIR) filters

Clock Networks

- Up to 16 global clocks and 88 regional clocks optimally routed to meet the maximum performance of 800 MHz
- Up to 112 and 132 periphery clocks in Stratix IV GX and Stratix IV E devices, respectively
- Up to 66 (16 GCLK + 22 RCLK + 28 PCLK) clock networks per device quadrant in Stratix IV GX and Stratix IV GT devices
- Up to 71 (16 GCLK + 22 RCLK + 33 PCLK) clock networks per device quadrant in Stratix IV E devices

EP4SGX290FH29C2X Intel IC FPGA 289 I/O 780HBGA

PLLs

- Three to 12 PLLs per device supporting spread-spectrum input tracking, programmable bandwidth, clock switchover, dynamic reconfiguration, and delay compensation
- On-chip PLL power supply regulators to minimize noise coupling

I/O Features

- Sixteen to 24 modular I/O banks per device with 24 to 48 I/Os per bank designed and packaged for optimal simultaneous switching noise (SSN) performance and migration capability
- Support for a wide range of industry I/O standards, including single-ended (LVTTL/CMOS/PCI/PCIX), differential (LVDS/mini-LVDS/RSDS), voltage-referenced single-ended and differential (SSTL/HSTL Class I/II) I/O standards
- On-chip series (R_S) and on-chip parallel (R_T) termination with auto-calibration for single-ended I/Os and on-chip differential (R_D) termination for differential I/Os
- Programmable output drive strength, slew rate control, bus hold, and weak pull-up capability for single-ended I/Os
- User I/O:GND:V_{CC} ratio of 8:1:1 to reduce loop inductance in the package—PCB interface
- Programmable transmitter differential output voltage (V_{OD}) and pre-emphasis for high-speed LVDS I/O

High-Speed Differential I/O with DPA and Soft-CDR

- Dedicated circuitry on the left and right sides of the device to support differential links at data rates from 150 Mbps to 1.6 Gbps
- Up to 98 differential SERDES in Stratix IV GX devices, up to 132 differential SERDES in Stratix IV E devices, and up to 47 differential SERDES in Stratix IV GT devices
- DPA circuitry at the receiver automatically compensates for channel-to-channel and channel-to-clock skew in source synchronous interfaces
- Soft-CDR circuitry at the receiver allows implementation of asynchronous serial interfaces with embedded clocks at up to 1.6 Gbps data rate (SGMII and GbE)

External Memory Interfaces

- Support for existing and emerging memory interface standards such as DDR SDRAM, DDR2 SDRAM, DDR3 SDRAM, QDRII SRAM, QDRII+ SRAM, and RLDRAM II
- DDR3 up to 1,067 Mbps/533 MHz
- Programmable DQ group widths of 4 to 36 bits (includes parity bits)
- Dynamic OCT, trace mismatch compensation, read-write leveling, and half-rate register capabilities provide a robust external memory interface solution

EP4SGX290FH29C2X Intel IC FPGA 289 I/O 780HBGA

System Integration

- All Stratix IV devices support hot socketing
- Four configuration modes:
  - Passive Serial (PS)
  - Fast Passive Parallel (FPP)
  - Fast Active Serial (FAS)
  - JTAG configuration
- Ability to perform remote system upgrades
- 256-bit advanced encryption standard (AES) encryption of configuration bits protects your design against copying, reverse engineering, and tampering
- Built-in soft error detection for configuration RAM cells

For more information about how to connect the PLL, external memory interfaces, I/O, high-speed differential I/O, power, and the JTAG pins to PCB, refer to the *Stratix IV GX and Stratix IV E Device Family Pin Connection Guidelines* and the *Stratix IV GT Device Family Pin Connection Guidelines*.

EP4SGX290FH29C2X Intel IC FPGA 289 I/O 780HBGA

Table 1–1 lists the Stratix IV GX device features.

Table 1–1. Stratix IV GX Device Features (Part 1 of 2)

Feature	EP4SGX70		EP4SGX110			EP4SGX180				EP4SGX230				EP4SGX290						EP4SGX360						EP4SGX530	
Package Option	**F780**	**F1152**	**F780**	**F1152**		**F780**	**F1152**		**F1517**	**F780**	**F1152**		**F1517**	**F780**	**F1152**		**F1517**	**F1760**	**F1932**	**F780**	**F1152**		**F1517**	**F1760**	**F1932**	**F1760**	**F1932**
ALMs	29,040		42,240			70,300				91,200				116,480						141,440						212,480	
LEs	72,600		105,600			175,750				228,000				291,200						353,600						531,200	
0.6 Gbps-8.5 Gbps Transceivers (PMA + PCS) *(1)*	—	16	—	—	16	—	—	16	24	—	—	16	24	—	—	16	24	24	32	—	—	16	24	24	32	24	32
0.6 Gbps-6.5 Gbps Transceivers (PMA + PCS) *(1)*	8	—	8	16	—	8	16	—	—	8	16	—	—	16	16	—	—	—	—	16	16	—	—	—	—	—	—
PMA-only CMU Channels (0.6 Gbps-6.5 Gbps)	—	8	—	—	8	—	—	8	12	—	—	8	12	—	—	8	12	12	16	—	—	8	12	12	16	12	16
PCI Express hard IP Blocks	1	2	1	2		1	2			1	2			2					4	2					4	4	
High-Speed LVDS SERDES (up to 1.6 Gbps) *(4)*	28	56	28	28	56	28	44		88	28	44		88	—	44		88	88	98	—	44		88	88	98	88	98
SPI-4.2 Links	1		1			1	2		4	1	2		4	—	2		4			—	2		4			4	

EP4SGX290FH29C2X Intel IC FPGA 289 I/O 780HBGA

Table 1–1. Stratix IV GX Device Features (Part 2 of 2)

Feature	EP4SGX70		EP4SGX110			EP4SGX180				EP4SGX230				EP4SGX290						EP4SGX360						EP4SGX530	
Package Option	**F780**	**F1152**	**F780**	**F1152**		**F780**	**F1152**		**F1517**	**F780**	**F1152**		**F1517**	**F780**	**F1152**		**F1517**	**F1760**	**F1932**	**F780**	**F1152**		**F1517**	**F1760**	**F1932**	**F1760**	**F1932**
M9K Blocks (256 x 36 bits)	462		660			950				1,235				936						1,248						1,280	
M144K Blocks (2048 x 72 bits)	16		16			20				22				36						48						64	
Total Memory (MLAB+M9K +M144K) Kb	7,370		9,564			13,627				17,133				17,248						22,564						27,376	
Embedded Multipliers 18 x 18 (2)	384		512			920				1,288				832						1,040					1,024	1,024	
PLLs	3	4	3	4		3	6		8	3	6		8	4	6		8	12	12	4	6		8	12	12	12	12
User I/Os (3)	372	488	372	372	488	372	564	564	744	372	564	564	744	289	564	564	744	880	920	289	564	564	744	880	920	880	920
Speed Grade (fastest to slowest) (5)	–2×, –3, –4	–2, –3, –4	–2×, –3, –4	–2×, –3, –4	–2, –3, –4	–2×, –3, –4	–2×, –3, –4	–2, –3, –4	–2, –3, –4	–2×, –3, –4	–2×, –3, –4	–2, –3, –4	–2, –3, –4	–2×, –3, –4	–2×, –3, –4	–2, –3, –4	–2, –3, –4	–2, –3, –4	–2, –3, –4	–2×, –3, –4	–2×, –3, –4	–2, –3, –4	–2, –3, –4	–2, –3, –4	–2, –3, –4	–2, –3, –4	–2, –3, –4

Notes to Table 1–1:

(1) The total number of transceivers is divided equally between the left and right side of each device, except for the devices in the F780 package. These devices have eight transceiver channels located only on the right side of the device.

(2) Four multiplier adder mode.

(3) The user I/Os count from pin-out files includes all general purpose I/O, dedicated clock pins, and dual purpose configuration pins. Transceiver pins and dedicated configuration pins are not included in the pin count.

(4) Total pairs of high-speed LVDS SERDES take the lowest channel count of R_X/T_X.

(5) The difference between the Stratix IV GX devices in the –2 and –2x speed grades is the number of available transceiver channels. The –2 device allows you to use the transceiver CMU blocks as transceiver channels. The –2x device does NOT allow you to use the CMU blocks as transceiver channels. In addition to the reduction of available transceiver channels in the Stratix IV GX –2x device, the data rates in the –2x device are limited to 6.5 Gbps.

EP4SGX290FH29C2X Intel IC FPGA 289 I/O 780HBGA

Table 1–2 lists the Stratix IV GX device package options.

Table 1–2. Stratix IV GX Device Package Options (1), (2)

Device	F780 (29 mm x 29 mm) (6)		F1152 (35 mm x 35 mm) (6)	F1152 (35 mm x 35 mm) (5), (7)		F1517 (40 mm x 40 mm) (5), (7)	F1760 (42.5 mm x 42.5 mm) (7)	F1932 (45 mm x 45 mm) (7)
EP4SGX70	DF29	—	—	HF35	—	—	—	—
EP4SGX110	DF29	—	FF35	HF35	—	—	—	—
EP4SGX180	DF29	—	FF35	—	HF35	KF40	—	—
EP4SGX230	DF29	—	FF35	—	HF35	KF40	—	—
EP4SGX290	—	FH29 (3)	FF35	—	HF35	KF40	KF43	NF45
EP4SGX360	—	FH29 (3)	FF35	—	HF35	KF40	KF43	NF45
EP4SGX530	—	—	—	—	HH35 (4)	KH40 (4)	KF43	NF45

Notes to Table 1–2:

(1) Device packages in the same column and marked under the same arrow sign have vertical migration capability.

(2) Use the Pin Migration Viewer in the Pin Planner to verify the pin migration compatibility when migrating devices. For more information, refer to *I/O Management* in the *Quartus II Handbook, Volume 2*.

(3) The 780-pin EP4SGX290 and EP4SGX360 devices are available only in 33 mm x 33 mm Hybrid flip chip package.

(4) The 1152-pin and 1517-pin EP4SGX530 devices are available only in 42.5 mm x 42.5 mm Hybrid flip chip packages.

(5) When migrating between hybrid and flip chip packages, there is an additional keep-out area. For more information, refer to the *Package Information Datasheet for Altera Devices*.

(6) Devices listed in this column are available in –2x, –3, and –4 speed grades. These devices do not have on-package decoupling capacitors.

(7) Devices listed in this column are available in –2, –3, and –4 speed grades. These devices have on-package decoupling capacitors. For more information about on-package decoupling capacitor value in each device, refer to Table 1–3.

On-package decoupling reduces the need for on-board or PCB decoupling capacitors by satisfying the transient current requirements at higher frequencies. The *Power Delivery Network* design tool for Stratix IV devices accounts for the on-package decoupling and reflects the reduced requirements for PCB decoupling capacitors.

EP4SGX290FH29C2X Intel IC FPGA 289 I/O 780HBGA

Table 1–3 lists the Stratix IV GX device on-package decoupling information.

Table 1–3. Stratix IV GX Device On-Package Decoupling Information (1)

Ordering Information		V_{CC}	V_{CCIO}	V_{CCL_GXB}	$V_{CCA_L/R}$	V_{CCT} and V_{CCR} (Shared)
EP4SGX70	HF35	2×1uF + 2×470nF	10nF per bank (2)	100nF per transceiver block	100nF	1×470nF + 1×47nF per side
EP4SGX110	HF35	2×1uF + 2×470nF	10nF per bank (2)	100nF per transceiver block	100nF	1×470nF + 1×47nF per side
EP4SGX180	HF35 KF40	2×1uF + 2×470nF	10nF per bank (2)	100nF per transceiver block	100nF	1×470nF + 1×47nF per side
EP4SGX230	HF35 KF40	2×1 uF + 2×470 nF	10 nF per bank (2)	100 nF per transceiver block	100 nF	1×470 nF + 1×47 nF per side
EP4SGX290	HF35 KF40 KF43 NF45	4×1 uF + 4×470 nF	10 nF per bank (2)	100 nF per transceiver block	100nF	1×470 nF + 1×47 nF per side
EP4SGX360	HF35 KF40 KF43 NF45	4×1 uF + 4×470 nF	10 nF per bank (2)	100 nF per transceiver block	100 nF	1×470 nF + 1×47 nF per side
EP4SGX530	HH35 KH40 KF43 NF45	4×1 uF + 4×470 nF	10 nF per bank (2)	100 nF per transceiver block	100 nF	1×470 nF + 1×47 nF per side

Notes to Table 1–3:

(1) Table 1–3 refers to production devices on-package decoupling. For more information about decoupling design of engineering sample (ES) devices, contact Altera Technical Support.

(2) For I/O banks 3(*), 4(*), 7(*), and 8(*) only. There is no OPD for I/O bank 1(*), 2(*), 5(*), and 6(*).

EP4SGX290FH29C2X Intel IC FPGA 289 I/O 780HBGA

Table 1–4 lists the Stratix IV E device features.

Table 1–4. Stratix IV E Device Features

Feature	EP4SE230	EP4SE360		EP4SE530			EP4SE820		
Package Pin Count	780	780	1152	1152	1517	1760	1152	1517	1760
ALMs	91,200	141,440		212,480			325,220		
LEs	228,000	353,600		531,200			813,050		
High-Speed LVDS SERDES (up to 1.6 Gbps) (1)	56	56	88	88	112	112	88	112	132
SPI-4.2 Links	3	3	4	4	6		4	6	6
M9K Blocks (256 x 36 bits)	1,235	1,248		1,280			1610		
M144K Blocks (2048 x 72 bits)	22	48		64			60		
Total Memory (MLAB+M9K+ M144K) Kb	17,133	22,564		27,376			33,294		
Embedded Multipliers (18 x 18) (2)	1,288	1,040		1,024			960		
PLLs	4	4	8	8	12	12	8	12	12
User I/Os (3)	488	488	744	744	976	976	744 (4)	976 (4)	1120 (4)
Speed Grade (fastest to slowest)	–2, –3, –4	–2, –3, –4	–2, –3, –4	–2, –3, –4	–2, –3, –4	–2, –3, –4	–3, –4	–3, –4	–3, –4

Notes to Table 1–4:

(1) The user I/O count from the pin-out files include all general purpose I/Os, dedicated clock pins, and dual purpose configuration pins. Transceiver pins and dedicated configuration pins are not included in the pin count.

(2) Four multiplier adder mode.

(3) Total pairs of high-speed LVDS SERDES take the lowest channel count of R_X/T_X.

(4) This data is preliminary.

EP4SGX290FH29C2X Intel IC FPGA 289 I/O 780HBGA

Table 1–5 summarizes the Stratix IV E device package options.

Table 1–5. Stratix IV E Device Package Options (1), (2)

Device	F780 (29 mm x 29 mm) (5), (6)	F1152 (35 mm x 35 mm) (5), (7)	F1517 (40 mm x 40 mm) (7)	F1760 (42.5 mm x 42.5 mm) (7)
EP4SE230	F29	—	—	—
EP4SE360	H29 (3)	F35	—	—
EP4SE530	—	H35 (4)	H40 (4)	F43
EP4SE820	—	H35 (4)	H40 (4)	F43

Notes to Table 1–5:

(1) Device packages in the same column and marked under the same arrow sign have vertical migration capability.

(2) Use the Pin Migration Viewer in the Pin Planner to verify the pin migration compatibility when migrating devices. For more information, refer to *I/O Management* in the *Quartus II Handbook, Volume 2*.

(3) The 780-pin EP4SE360 device is available only in the 33 mm x 33 mm Hybrid flip chip package.

(4) The 1152-pin and 1517-pin for EP4SE530 and EP4SE820 devices are available only in the 42.5 mm x 42.5 mm Hybrid flip chip package.

(5) When migrating between hybrid and flip chip packages, there is an additional keep-out area. For more information, refer to the *Package Information Datasheet for Altera Devices*.

(6) Devices listed in this column do not have on-package decoupling capacitors.

(7) Devices listed in this column have on-package decoupling capacitors. For more information about on-package decoupling capacitor value for each device, refer to Table 1–6.

Table 1–6 lists the Stratix IV E on-package decoupling information.

Table 1–6. Stratix IV E Device On-Package Decoupling Information (1)

Ordering Information		V_{CC}	V_{CCIO}
EP4SE360	F35	4×1 uF + 4×470 nF	10 nF per bank
EP4SE530	H35 H40 F43	4×1 uF + 4×470 nF	10 nF per bank
EP4SE820	H35 H40 F43	4×1 uF + 4×470 nF	10 nF per bank

Note to Table 1–6:

(1) Table 1–6 refers to production devices on-package decoupling. For more information about decoupling design of engineering sample (ES) devices, contact Altera Technical Support.

Table 1–7 lists the Stratix IV GT device features.

Table 1–7. Stratix IV GT Device Features (Part 1 of 2)

Feature	EP4S40G2	EP4S40G5	EP4S100G2	EP4S100G3	EP4S100G4	EP4S100G5	
Package Pin Count	1517	1517	1517	1932	1932	1517	1932
ALMs	91,200	212,480	91,200	116,480	141,440	212,480	
LEs	228,000	531,200	228,000	291,200	353,600	531,200	
Total Transceiver Channels	36	36	36	48	48	36	48

EP4SGX290FH29C2X Intel IC FPGA 289 I/O 780HBGA

Table 1–7. Stratix IV GT Device Features (Part 2 of 2)

Feature	EP4S40G2	EP4S40G5	EP4S100G2	EP4S100G3	EP4S100G4	EP4S100G5	
10G Transceiver Channels (600 Mbps - 11.3 Gbps with PMA + PCS)	12	12	24	24	24	24	32
8G Transceiver Channels (600 Mbps - 8.5 Gbps with PMA + PCS) *(1)*	12	12	0	8	8	0	0
PMA-only CMU Channels (600 Mbps- 6.5 Gbps)	12	12	12	16	16	12	16
PCIe hard IP Blocks	2	2	2	4	4	2	4
High-Speed LVDS SERDES (up to 1.6 Gbps) *(2)*	46	46	46	47	47	46	47
SP1-4.2 Links	2	2	2	2	2	2	2
M9K Blocks (256 x 36 bits)	1,235	1,280	1,235	936	1,248	1,280	
M144K Blocks (2048 x 72 bits)	22	64	22	36	48	64	
Total Memory (MLAB + M9K + M144K) Kb	17,133	27,376	17,133	17,248	22,564	27,376	
Embedded Multipliers 18 x 18 *(3)*	1,288	1,024	1,288	832	1,024	1,024	
PLLs	8	8	8	12	12	8	12
User I/Os *(4)*, *(5)*	654	654	654	781	781	654	781
Speed Grade (fastest to slowest)	–1, –2, –3	–1, –2, –3	–1, –2, –3	–1, –2, –3	–1, –2, –3	–1, –2, –3	–1, –2, –3

Notes to Table 1–7:

(1) You can configure all 10G transceiver channels as 8G transceiver channels. For example, the EP4S40G2F40 device has twenty-four 8G transceiver channels and the EP4S100G5F45 device has thirty-two 8G transceiver channels.

(2) Total pairs of high-speed LVDS SERDES take the lowest channel count of R_X/T_X.

(3) Four multiplier adder mode.

(4) The user I/O count from the pin-out files include all general purpose I/Os, dedicated clock pins, and dual purpose configuration pins. Transceiver pins and dedicated configuration pins are not included in the pin count.

(5) This data is preliminary.

EP4SGX290FH29C2X Intel IC FPGA 289 I/O 780HBGA

Table 1–8 lists the resource counts for the Stratix IV GT devices.

Table 1–8. Stratix IV GT Device Package Options (1), (2)

Device	1517 Pin (40 mm x 40 mm) (3)	1932 Pin (45 mm x 45 mm)
Stratix IV GT 40 G Devices		
EP4S40G2	F40	—
EP4S40G5	H40 (4), (5)	—
Stratix IV GT 100 G Devices		
EP4S100G2	F40	—
EP4S100G3	—	F45
EP4S100G4	—	F45
EP4S100G5	H40 (4), (5)	F45

Notes to Table 1–8:

(1) This table represents pin compatability; however, it does not include hard IP block placement compatability.

(2) Devices under the same arrow sign have vertical migration capability.

(3) When migrating between hybrid and flip chip packages, there is an additional keep-out area. For more information, refer to the *Altera Device Package Information Data Sheet*.

(4) EP4S40G5 and EP4S100G5 devices with 1517 pin-count are only available in 42.5-mm x 42.5-mm Hybrid flip chip packages.

(5) If you are using the hard IP block, migration is not possible.

Table 1–9 lists the Stratix IV GT on-package decoupling information.

Table 1–9. Stratix IV GT Device On-Package Decoupling Information (1)

Ordering Information	V_{CC}	V_{CCIO}	V_{CCL_GXB}	$V_{CCA_L/R}$	$V_{CCT_L/R}$	$V_{CCR_L/R}$
EP4S40G2F40 EP4S100G2F40	2×1 uF + 2×470 nF	10 nF per bank (2)	100 nF per transceiver block	100 nF	100 nF	100 nF
EP4S100G3F45	4×1 uF + 4×470 nF	10 nF per bank (2)	100 nF per transceiver block	100 nF	100 nF	100 nF
EP4S100G4F45						
EP4S40G5H40						
EP4S100G5H40						
EP4S100G5F45						

Notes to Table 1–9:

(1) Table 1–9 refers to production devices on-package decoupling. For more information about decoupling design of engineering sample (ES) devices, contact Altera Technical Support.

(2) For I/O banks 3(*), 4(*), 7(*), and 8(*) only. There is no OPD for I/O bank 1(*), 2(*), 5(*), and 6(*).

EP4SGX290FH29C2X Intel IC FPGA 289 I/O 780HBGA

Integrated Software Platform

The Quartus II software provides an integrated environment for HDL and schematic design entry, compilation and logic synthesis, full simulation and advanced timing analysis, SignalTap II Logic Analyzer, and device configuration of Stratix IV designs. The Quartus II software provides the MegaWizard™ Plug-In Manager user interface to generate different functional blocks, such as memory, PLL, and digital signal processing logic. For transceivers, the Quartus II software provides the ALTGX MegaWizard Plug-In Manager interface that guides you through configuration of the transceiver based on your application requirements.

The Stratix IV GX and GT transceivers allow you to implement low-power and reliable high-speed serial interface applications with its fully reconfigurable hardware, optimal signal integrity, and integrated Quartus II software platform.

For more information about the QuarJanuary2016tus II software features, refer to the *Quartus II Handbook*.

Ordering Information

This section describes the Stratix IV E, GT, and GX devices ordering information. Figure 1–4 shows the ordering codes for Stratix IV GX and E devices.

Figure 1–4. Stratix IV GX and E Device Packaging Ordering Information

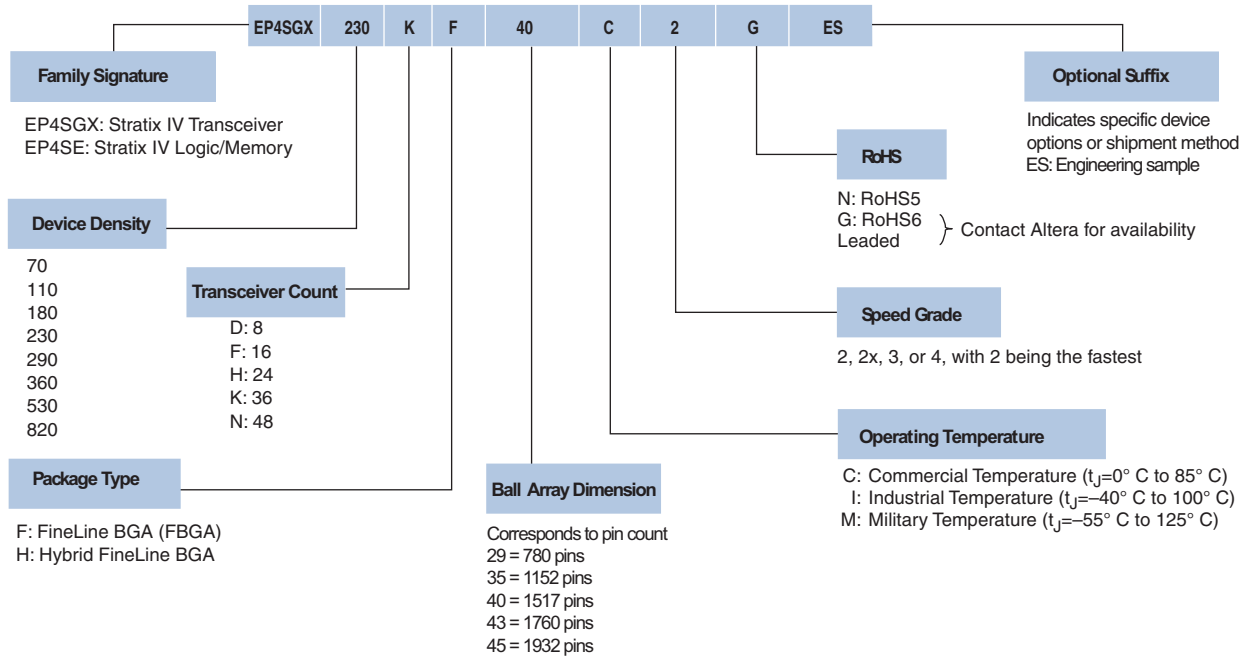

EP4SGX290FH29C2X Intel IC FPGA 289 I/O 780HBGA

Figure 1–5 shows the ordering codes for Stratix IV GT devices.

Figure 1–5. Stratix IV GT Device Packaging Ordering Information

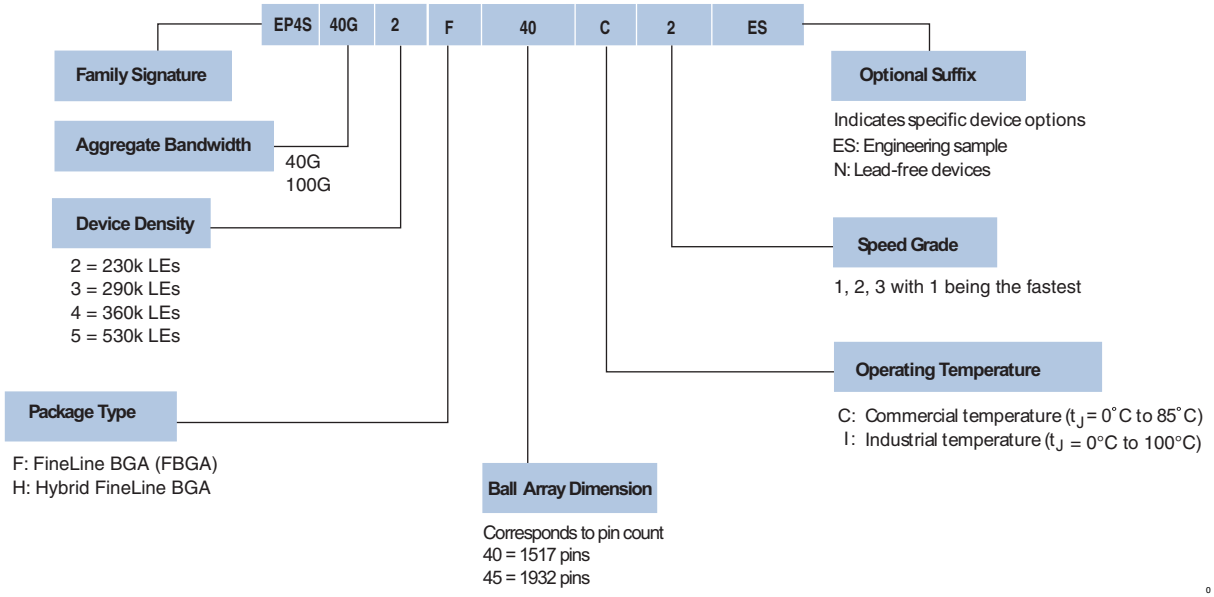

Document Revision History

Table 1–10 lists the revision history for this chapter.

Table 1–10. Document Revision History (Part 1 of 2)

Date	Version	Changes
January 2016	3.5	■ Updated Figure 1–4 with new RoHS information
September 2012	3.4	■ Updated Table 1–1 to close FB #30986. ■ Updated Table 1–2 and Table 1–5 to close FB #31127.
June 2011	3.3	■ Added military temperature to Figure 1–4.
February 2011	3.2	■ Updated Table 1–7 and Table 1–8. ■ Applied new template. ■ Minor text edits.
March 2010	3.1	■ Updated Table 1–1, Table 1–2, and Table 1–7. ■ Updated Figure 1–3. ■ Updated the “Stratix IV GT Devices” section. ■ Added two new references to the Introduction section. ■ Minor text edits.

EP4SGX290FH29C2X Intel IC FPGA 289 I/O 780HBGA

Table 1–10. Document Revision History (Part 2 of 2)

Date	Version	Changes
November 2009	3.0	■ Updated the “Stratix IV Device Family Overview”, “Feature Summary”, “Stratix IV GT Devices”, “High-Speed Transceiver Features”, “FPGA Fabric and I/O Features”, “Highest Aggregate Data Bandwidth”, “System Integration”, and “Integrated Software Platform” sections. ■ Added Table 1–3, Table 1–6, and Table 1–9. ■ Updated Table 1–1, Table 1–2, Table 1–4, Table 1–5, Table 1–7, and Table 1–8. ■ Updated Figure 1–3, Figure 1–4, and Figure 1–5. ■ Minor text edits.
June 2009	2.4	■ Updated Table 1–1. ■ Minor text edits.
April 2009	2.3	■ Added Table 1–5, Table 1–6, and Figure 1–3. ■ Updated Figure 1–5. ■ Updated Table 1–1, Table 1–2, Table 1–3, and Table 1–4. ■ Updated “Introduction”, “Feature Summary”, “Stratix IV GX Devices”, “Stratix IV GT Devices”, “Architecture Features”, and “FPGA Fabric and I/O Features”
March 2009	2.2	■ Updated “Feature Summary”, “Stratix IV GX Devices”, “Stratix IV E Device”, “Stratix IV GT Devices”, “Signal Integrity” ■ Removed Tables 1-5 and 1-6 ■ Updated Figure 1–4
March 2009	2.1	■ Updated “Introduction”, “Feature Summary”, “Stratix IV Device Diagnostic Features”, “Signal Integrity”, “Clock Networks”,“High-Speed Differential I/O with DPA and Soft-CDR”, “System Integration”, and “Ordering Information” sections. ■ Added “Stratix IV GT 100G Devices” and “Stratix IV GT 100G Transceiver Bandwidth” sections. ■ Updated Table 1–1, Table 1–2, Table 1–3, and Table 1–4. ■ Added Table 1–5 and Table 1–6. ■ Updated Figure 1–3 and Figure 1–4. ■ Added Figure 1–5. ■ Removed “Referenced Documents” section.
November 2008	2.0	■ Updated “Feature Summary” on page 1–1. ■ Updated “Stratix IV Device Diagnostic Features” on page 1–7. ■ Updated “FPGA Fabric and I/O Features” on page 1–8. ■ Updated Table 1–1. ■ Updated Table 1–2. ■ Updated “Table 1–5 shows the total number of transceivers available in the Stratix IV GT Device.” on page 1–15.
July 2008	1.1	Revised “Introduction”.
May 2008	1.0	Initial release.

EP4SGX290FH29C2X Intel IC FPGA 289 I/O 780HBGA

FPGAMALL
Authorized Distributor

OUR CERTIFICATE

A long-term cooperative relationship can be built between global customers and us by providing excellent products

Business Type	Trading Company, Distributor/Wholesaler
Main Products	Electronic Integrated Circuit
Certifications	ISO9001
Total Annual Revenue	US$2.5 Million - US$5 Million
Country / Region	Hongkong, China
Total Employees	100 - 200 People
Year Established	2018
Main Markets	North America South Asia Western Europe

sales@fpgamall.com
+00852-56428680