FPGAMALL
Authorized Distributor

https://www.fpgamall.com

THE DATASHEET OF FPGA

sales@fpgamall.com
+00852-56428680

FLEX 6000

Programmable Logic Device Family

March 2001, ver. 4.1 Data Sheet

Features...

- Provides an ideal low-cost, programmable alternative to high-volume gate array applications and allows fast design changes during prototyping or design testing
- Product features
  - Register-rich, look-up table- (LUT-) based architecture
  - OptiFLEX® architecture that increases device area efficiency
  - Typical gates ranging from 5,000 to 24,000 gates (see Table 1)
  - Built-in low-skew clock distribution tree
  - 100% functional testing of all devices; test vectors or scan chains are not required
- System-level features
  - In-circuit reconfigurability (ICR) via external configuration device or intelligent controller
  - 5.0-V devices are fully compliant with peripheral component interconnect Special Interest Group (PCI SIG) ***PCI Local Bus Specification, Revision 2.2***
  - Built-in Joint Test Action Group (JTAG) boundary-scan test (BST) circuitry compliant with IEEE Std. 1149.1-1990, available without consuming additional device logic
  - MultiVolt™ I/O interface operation, allowing a device to bridge between systems operating at different voltages
  - Low power consumption (typical specification less than 0.5 mA in standby mode)
  - 3.3-V devices support hot-socketing

Table 1. FLEX 6000 Device Features

Feature	EPF6010A	EPF6016	EPF6016A	EPF6024A
Typical gates *(1)*	10,000	16,000	16,000	24,000
Logic elements (LEs)	880	1,320	1,320	1,960
Maximum I/O pins	102	204	171	218
Supply voltage (V_{CCINT})	3.3 V	5.0 V	3.3 V	3.3 V

Note:

(1) The embedded IEEE Std. 1149.1 JTAG circuitry adds up to 14,000 gates in addition to the listed typical gates.

EPF6024ATC144-2 Intel IC FPGA 117 I/O 144TQFP

...and More Features

- Powerful I/O pins
  - Individual tri-state output enable control for each pin
  - Programmable output slew-rate control to reduce switching noise
  - Fast path from register to I/O pin for fast clock-to-output time
- Flexible interconnect
  - FastTrack® Interconnect continuous routing structure for fast, predictable interconnect delays
  - Dedicated carry chain that implements arithmetic functions such as fast adders, counters, and comparators (automatically used by software tools and megafunctions)
  - Dedicated cascade chain that implements high-speed, high-fan-in logic functions (automatically used by software tools and megafunctions)
  - Tri-state emulation that implements internal tri-state networks
  - Four low-skew global paths for clock, clear, preset, or logic signals
- Software design support and automatic place-and-route provided by Altera's development system for Windows-based PCs, Sun SPARCstations, and HP 9000 Series 700/800
- Flexible package options
  - Available in a variety of packages with 100 to 256 pins, including the innovative FineLine BGA™ packages (see Table 2)
  - SameFrame™ pin-compatibility (with other FLEX® 6000 devices) across device densities and pin counts
  - Thin quad flat pack (TQFP), plastic quad flat pack (PQFP), and ball-grid array (BGA) packages (see Table 2)
  - Footprint- and pin-compatibility with other FLEX 6000 devices in the same package
- Additional design entry and simulation support provided by EDIF 2 0 0 and 3 0 0 netlist files, the library of parameterized modules (LPM), Verilog HDL, VHDL, DesignWare components, and other interfaces to popular EDA tools from manufacturers such as Cadence, Exemplar Logic, Mentor Graphics, OrCAD, Synopsys, Synplicity, VeriBest, and Viewlogic

Table 2. FLEX 6000 Package Options & I/O Pin Count

Device	100-Pin TQFP	100-Pin FineLine BGA	144-Pin TQFP	208-Pin PQFP	240-Pin PQFP	256-Pin BGA	256-pin FineLine BGA
EPF6010A	71		102				
EPF6016			117	171	199	204	
EPF6016A	81	81	117	171			171
EPF6024A			117	171	199	218	219

EPF6024ATC144-2 Intel IC FPGA 117 I/O 144TQFP

General Description

The Altera® FLEX 6000 programmable logic device (PLD) family provides a low-cost alternative to high-volume gate array designs. FLEX 6000 devices are based on the OptiFLEX architecture, which minimizes die size while maintaining high performance and routability. The devices have reconfigurable SRAM elements, which give designers the flexibility to quickly change their designs during prototyping and design testing. Designers can also change functionality during operation via in-circuit reconfiguration.

FLEX 6000 devices are reprogrammable, and they are 100% tested prior to shipment. As a result, designers are not required to generate test vectors for fault coverage purposes, allowing them to focus on simulation and design verification. In addition, the designer does not need to manage inventories of different gate array designs. FLEX 6000 devices are configured on the board for the specific functionality required.

Table 3 shows FLEX 6000 performance for some common designs. All performance values shown were obtained using Synopsys DesignWare or LPM functions. Special design techniques are not required to implement the applications; the designer simply infers or instantiates a function in a Verilog HDL, VHDL, Altera Hardware Description Language (AHDL), or schematic design file.

Table 3. FLEX 6000 Device Performance for Common Designs

Application	LEs Used	Performance			Units
		-1 Speed Grade	-2 Speed Grade	-3 Speed Grade	
16-bit loadable counter	16	172	153	133	MHz
16-bit accumulator	16	172	153	133	MHz
24-bit accumulator	24	136	123	108	MHz
16-to-1 multiplexer (pin-to-pin) *(1)*	10	12.1	13.4	16.6	ns
16 × 16 multiplier with a 4-stage pipeline	592	84	67	58	MHz

Note:
(1) This performance value is measured as a pin-to-pin delay.

EPF6024ATC144-2 Intel IC FPGA 117 I/O 144TQFP

Table 4 shows FLEX 6000 performance for more complex designs.

Table 4. FLEX 6000 Device Performance for Complex Designs *Note (1)*

Application	LEs Used	Performance			Units
		-1 Speed Grade	-2 Speed Grade	-3 Speed Grade	
8-bit, 16-tap parallel finite impulse response (FIR) filter	599	94	80	72	MSPS
8-bit, 512-point fast Fourier transform (FFT) function	1,182	75 63	89 53	109 43	µS MHz
`a16450` universal asynchronous receiver/transmitter (UART)	487	36	30	25	MHz
PCI bus target with zero wait states	609	56	49	42	MHz

Note:
(1) The applications in this table were created using Altera MegaCore™ functions.

FLEX 6000 devices are supported by Altera development systems; a single, integrated package that offers schematic, text (including AHDL), and waveform design entry, compilation and logic synthesis, full simulation and worst-case timing analysis, and device configuration. The Altera software provides EDIF 2 0 0 and 3 0 0, LPM, VHDL, Verilog HDL, and other interfaces for additional design entry and simulation support from other industry-standard PC- and UNIX workstation-based EDA tools.

The Altera software works easily with common gate array EDA tools for synthesis and simulation. For example, the Altera software can generate Verilog HDL files for simulation with tools such as Cadence Verilog-XL. Additionally, the Altera software contains EDA libraries that use device-specific features such as carry chains which are used for fast counter and arithmetic functions. For instance, the Synopsys Design Compiler library supplied with the Altera development systems include DesignWare functions that are optimized for the FLEX 6000 architecture.

The Altera development system runs on Windows-based PCs, Sun SPARCstations, and HP 9000 Series 700/800.

f See the *MAX+PLUS II Programmable Logic Development System & Software Data Sheet* and the *Quartus Programmable Logic Development System & Software Data Sheet* for more information.

EPF6024ATC144-2 Intel IC FPGA 117 I/O 144TQFP

Functional Description

The FLEX 6000 OptiFLEX architecture consists of logic elements (LEs). Each LE includes a 4-input look-up table (LUT), which can implement any 4-input function, a register, and dedicated paths for carry and cascade chain functions. Because each LE contains a register, a design can be easily pipelined without consuming more LEs. The specified gate count for FLEX 6000 devices includes all LUTs and registers.

LEs are combined into groups called logic array blocks (LABs); each LAB contains 10 LEs. The Altera software automatically places related LEs into the same LAB, minimizing the number of required interconnects. Each LAB can implement a medium-sized block of logic, such as a counter or multiplexer.

Signal interconnections within FLEX 6000 devices—and to and from device pins—are provided via the routing structure of the FastTrack Interconnect. The routing structure is a series of fast, continuous row and column channels that run the entire length and width of the device. Any LE or pin can feed or be fed by any other LE or pin via the FastTrack Interconnect. See "FastTrack Interconnect" on page 17 of this data sheet for more information.

Each I/O pin is fed by an I/O element (IOE) located at the end of each row and column of the FastTrack Interconnect. Each IOE contains a bidirectional I/O buffer. Each IOE is placed next to an LAB, where it can be driven by the local interconnect of that LAB. This feature allows fast clock-to-output times of less than 8 ns when a pin is driven by any of the 10 LEs in the adjacent LAB. Also, any LE can drive any pin via the row and column interconnect. I/O pins can drive the LE registers via the row and column interconnect, providing setup times as low as 2 ns and hold times of 0 ns. IOEs provide a variety of features, such as JTAG BST support, slew-rate control, and tri-state buffers.

Figure 1 shows a block diagram of the FLEX 6000 OptiFLEX architecture. Each group of ten LEs is combined into an LAB, and the LABs are arranged into rows and columns. The LABs are interconnected by the FastTrack Interconnect. IOEs are located at the end of each FastTrack Interconnect row and column.

EPF6024ATC144-2 Intel IC FPGA 117 I/O 144TQFP

Figure 1. OptiFLEX Architecture Block Diagram

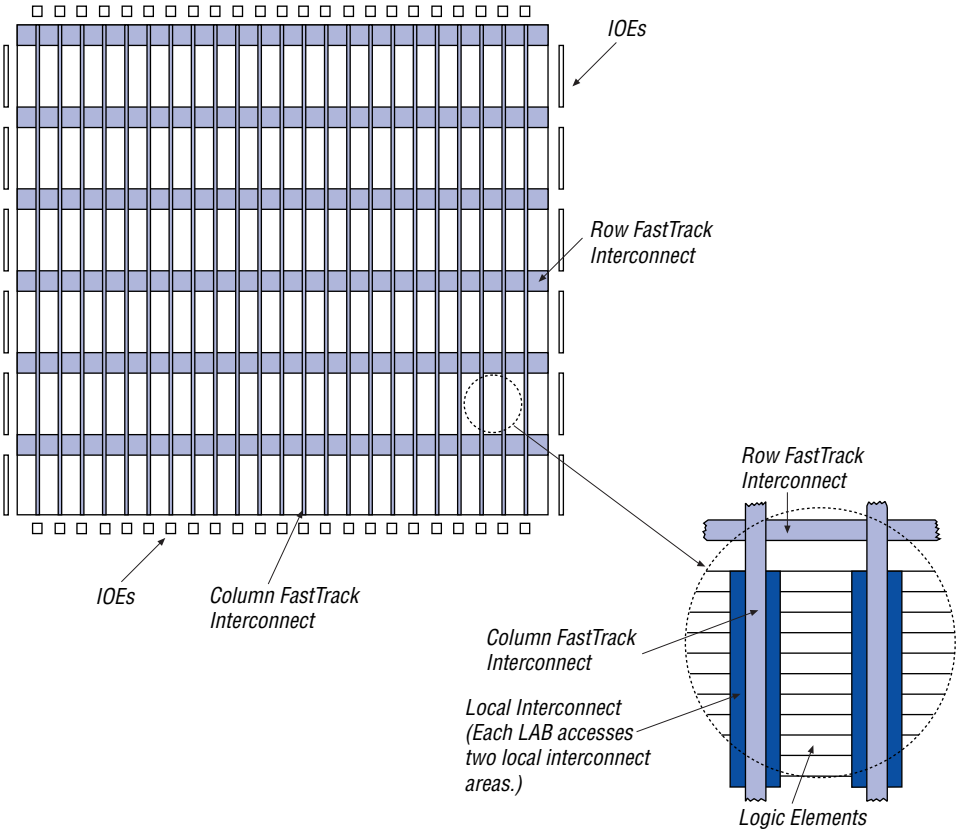

FLEX 6000 devices provide four dedicated, global inputs that drive the control inputs of the flipflops to ensure efficient distribution of high-speed, low-skew control signals. These inputs use dedicated routing channels that provide shorter delays and lower skews than the FastTrack Interconnect. These inputs can also be driven by internal logic, providing an ideal solution for a clock divider or an internally generated asynchronous clear signal that clears many registers in the device. The dedicated global routing structure is built into the device, eliminating the need to create a clock tree.

Logic Array Block

An LAB consists of ten LEs, their associated carry and cascade chains, the LAB control signals, and the LAB local interconnect. The LAB provides the coarse-grained structure of the FLEX 6000 architecture, and facilitates efficient routing with optimum device utilization and high performance.

EPF6024ATC144-2 Intel IC FPGA 117 I/O 144TQFP

The interleaved LAB structure—an innovative feature of the FLEX 6000 architecture—allows each LAB to drive two local interconnects. This feature minimizes the use of the FastTrack Interconnect, providing higher performance. An LAB can drive 20 LEs in adjacent LABs via the local interconnect, which maximizes fitting flexibility while minimizing die size. See Figure 2.

Figure 2. Logic Array Block

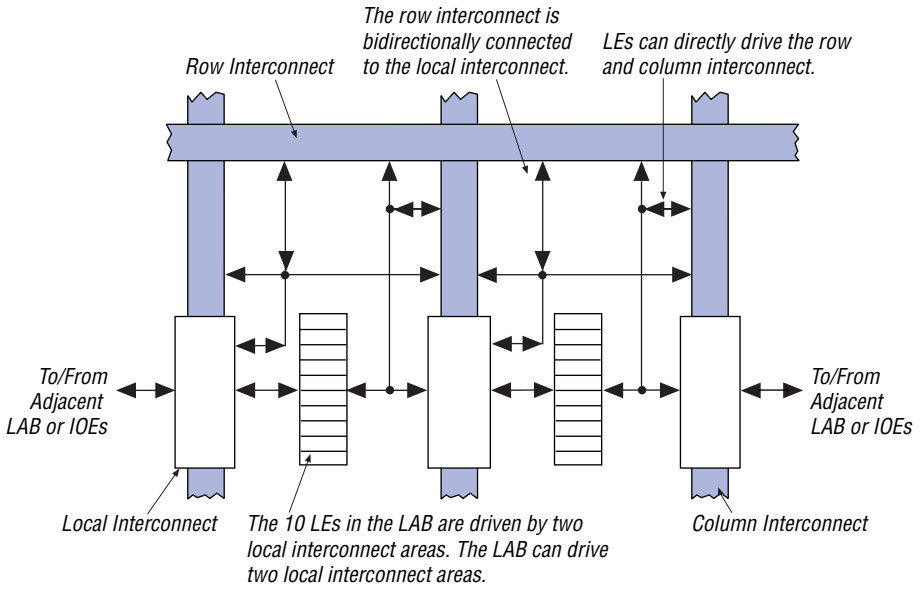

In most designs, the registers only use global clock and clear signals. However, in some cases, other clock or asynchronous clear signals are needed. In addition, counters may also have synchronous clear or load signals. In a design that uses non-global clock and clear signals, inputs from the first LE in an LAB are re-routed to drive the control signals for that LAB. See Figure 3.

EPF6024ATC144-2 Intel IC FPGA 117 I/O 144TQFP

Figure 3. LAB Control Signals

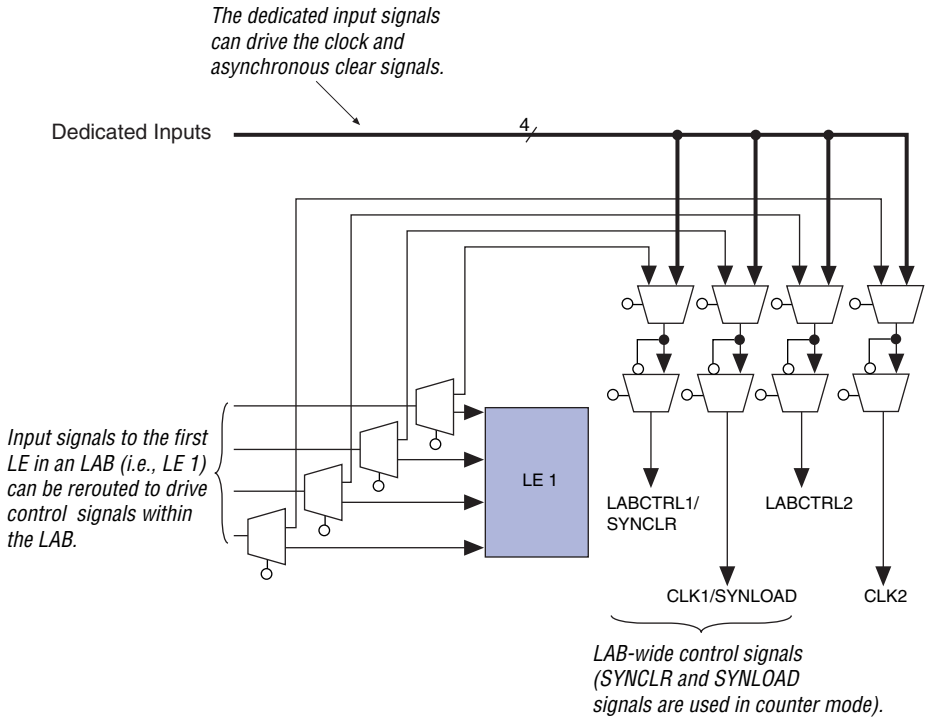

Logic Element

An LE, the smallest unit of logic in the FLEX 6000 architecture, has a compact size that provides efficient logic usage. Each LE contains a four-input LUT, which is a function generator that can quickly implement any function of four variables. An LE contains a programmable flipflop, carry and cascade chains. Additionally, each LE drives both the local and the FastTrack Interconnect. See Figure 4.

EPF6024ATC144-2 Intel IC FPGA 117 I/O 144TQFP

Figure 4. Logic Element

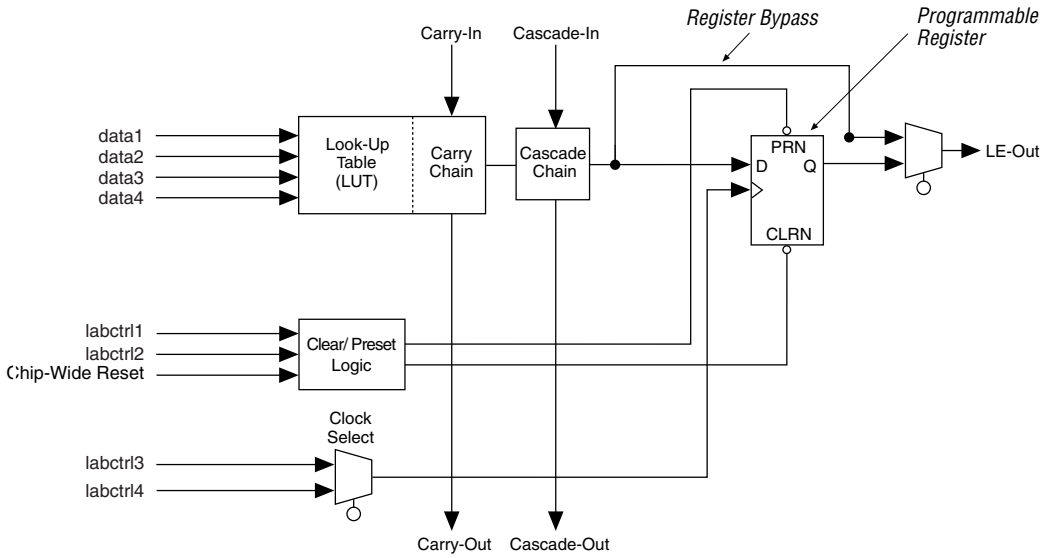

The programmable flipflop in the LE can be configured for D, T, JK, or SR operation. The clock and clear control signals on the flipflop can be driven by global signals, general-purpose I/O pins, or any internal logic. For combinatorial functions, the flipflop is bypassed and the output of the LUT drives the outputs of the LE. The LE output can drive both the local interconnect and the FastTrack Interconnect.

The FLEX 6000 architecture provides two types of dedicated high-speed data paths that connect adjacent LEs without using local interconnect paths: carry chains and cascade chains. A carry chain supports high-speed arithmetic functions such as counters and adders, while a cascade chain implements wide-input functions such as equivalent comparators with minimum delay. Carry and cascade chains connect LEs 2 through 10 in an LAB and all LABs in the same half of the row. Because extensive use of carry and cascade chains can reduce routing flexibility, these chains should be limited to speed-critical portions of a design.

EPF6024ATC144-2 Intel IC FPGA 117 I/O 144TQFP

Carry Chain

The carry chain provides a very fast (0.1 ns) carry-forward function between LEs. The carry-in signal from a lower-order bit drives forward into the higher-order bit via the carry chain, and feeds into both the LUT and the next portion of the carry chain. This feature allows the FLEX 6000 architecture to implement high-speed counters, adders, and comparators of arbitrary width. Carry chain logic can be created automatically by the Altera software during design processing, or manually by the designer during design entry. Parameterized functions such as LPM and DesignWare functions automatically take advantage of carry chains for the appropriate functions.

Because the first LE of each LAB can generate control signals for that LAB, the first LE in each LAB is not included in carry chains. In addition, the inputs of the first LE in each LAB may be used to generate synchronous clear and load enable signals for counters implemented with carry chains.

Carry chains longer than nine LEs are implemented automatically by linking LABs together. For enhanced fitting, a long carry chain skips alternate LABs in a row. A carry chain longer than one LAB skips either from an even-numbered LAB to another even-numbered LAB, or from an odd-numbered LAB to another odd-numbered LAB. For example, the last LE of the first LAB in a row carries to the second LE of the third LAB in the row. In addition, the carry chain does not cross the middle of the row. For instance, in the EPF6016 device, the carry chain stops at the 11th LAB in a row and a new carry chain begins at the 12th LAB.

Figure 5 shows how an n-bit full adder can be implemented in $n + 1$ LEs with the carry chain. One portion of the LUT generates the sum of two bits using the input signals and the carry-in signal; the sum is routed to the output of the LE. Although the register can be bypassed for simple adders, it can be used for an accumulator function. Another portion of the LUT and the carry chain logic generates the carry-out signal, which is routed directly to the carry-in signal of the next-higher-order bit. The final carry-out signal is routed to an LE, where it is driven onto the FastTrack Interconnect.

EPF6024ATC144-2 Intel IC FPGA 117 I/O 144TQFP

Figure 5. Carry Chain Operation

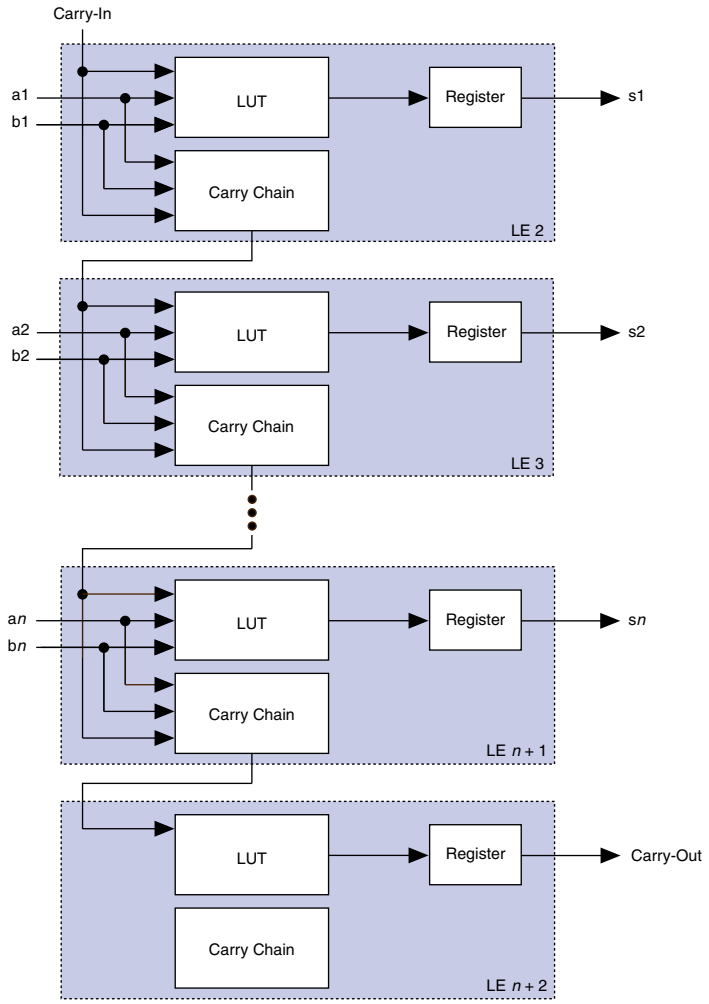

EPF6024ATC144-2 Intel IC FPGA 117 I/O 144TQFP

Cascade Chain

The cascade chain enables the FLEX 6000 architecture to implement very wide fan-in functions. Adjacent LUTs can be used to implement portions of the function in parallel; the cascade chain serially connects the intermediate values. The cascade chain can use a logical AND or logical OR gate (via De Morgan's inversion) to connect the outputs of adjacent LEs. Each additional LE provides four more inputs to the effective width of a function, with a delay as low as 0.5 ns per LE. Cascade chain logic can be created automatically by the Altera software during design processing, or manually by the designer during design entry. Parameterized functions such as LPM and DesignWare functions automatically take advantage of cascade chains for the appropriate functions.

A cascade chain implementing an AND gate can use the register in the last LE; a cascade chain implementing an OR gate cannot use this register because of the inversion required to implement the OR gate.

Because the first LE of an LAB can generate control signals for that LAB, the first LE in each LAB is not included in cascade chains. Moreover, cascade chains longer than nine bits are automatically implemented by linking several LABs together. For easier routing, a long cascade chain skips every other LAB in a row. A cascade chain longer than one LAB skips either from an even-numbered LAB to another even-numbered LAB, or from an odd-numbered LAB to another odd-numbered LAB. For example, the last LE of the first LAB in a row cascades to the second LE of the third LAB. The cascade chain does not cross the center of the row. For example, in an EPF6016 device, the cascade chain stops at the 11th LAB in a row and a new cascade chain begins at the 12th LAB.

Figure 6 shows how the cascade function can connect adjacent LEs to form functions with a wide fan-in. In this example, functions of $4n$ variables are implemented with n LEs. The cascade chain requires 3.4 ns to decode a 16-bit address.

EPF6024ATC144-2 Intel IC FPGA 117 I/O 144TQFP

Figure 6. Cascade Chain Operation

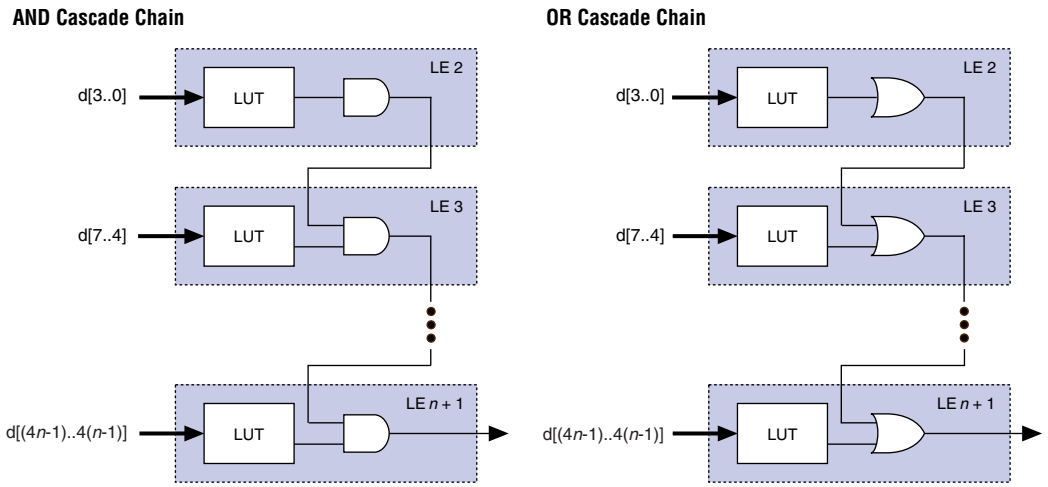

LE Operating Modes

The FLEX 6000 LE can operate in one of the following three modes:

- Normal mode
- Arithmetic mode
- Counter mode

Each of these modes uses LE resources differently. In each mode, seven available inputs to the LE—the four data inputs from the LAB local interconnect, the feedback from the programmable register, and the carry-in and cascade-in from the previous LE—are directed to different destinations to implement the desired logic function. LAB-wide signals provide clock, asynchronous clear, synchronous clear, and synchronous load control for the register. The Altera software, in conjunction with parameterized functions such as LPM and DesignWare functions, automatically chooses the appropriate mode for common functions such as counters, adders, and multipliers. If required, the designer can also create special-purpose functions to use an LE operating mode for optimal performance.

Figure 7 shows the LE operating modes.

EPF6024ATC144-2 Intel IC FPGA 117 I/O 144TQFP

Figure 7. LE Operating Modes

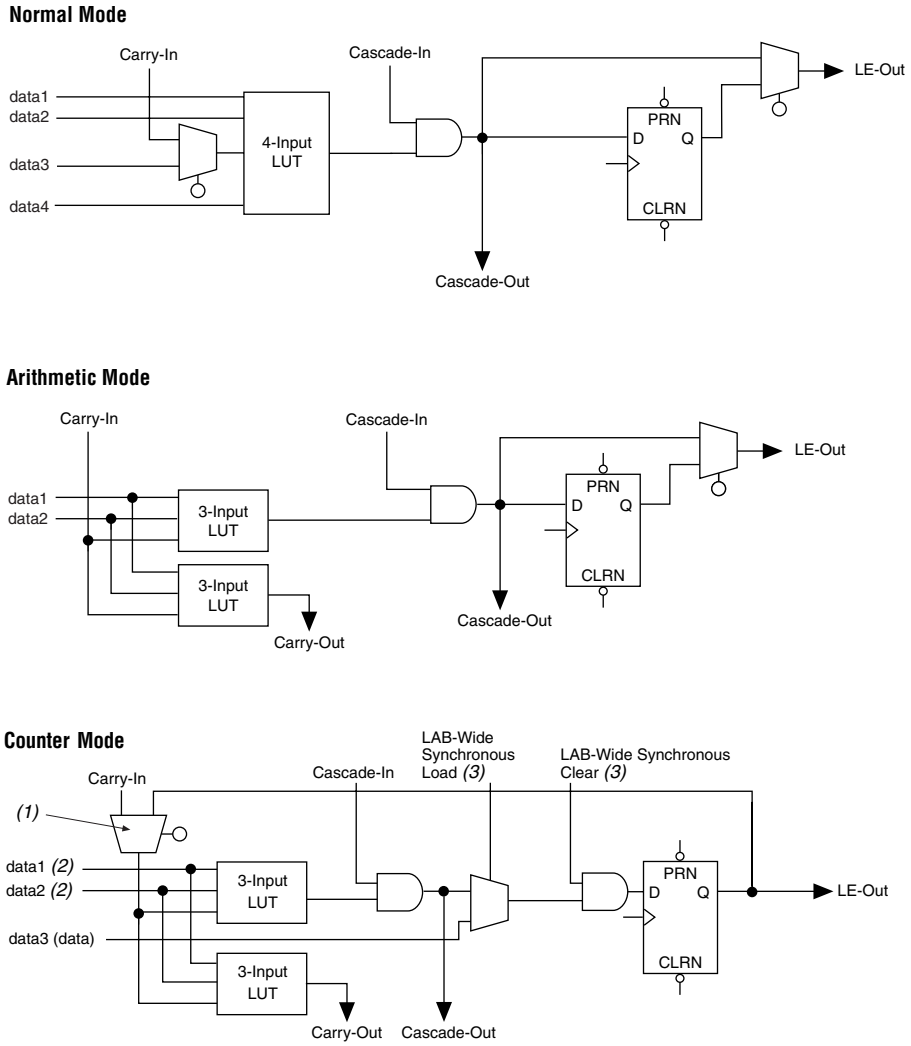

Notes:

(1) The register feedback multiplexer is available on LE 2 of each LAB.

(2) The `data1` and `data2` input signals can supply a clock enable, up or down control, or register feedback signals for all LEs other than the second LE in an LAB.

(3) The LAB-wide synchronous clear and LAB-wide synchronous load affect all registers in an LAB.

EPF6024ATC144-2 Intel IC FPGA 117 I/O 144TQFP

Normal Mode

The normal mode is suitable for general logic applications, combinatorial functions, or wide decoding functions that can take advantage of a cascade chain. In normal mode, four data inputs from the LAB local interconnect and the carry-in are inputs to a 4-input LUT. The Altera software automatically selects the carry-in or the `DATA3` signal as one of the inputs to the LUT. The LUT output can be combined with the cascade-in signal to form a cascade chain through the cascade-out signal.

Arithmetic Mode

The arithmetic mode is ideal for implementing adders, accumulators, and comparators. An LE in arithmetic mode uses two 3-input LUTs. One LUT computes a 3-input function; the other generates a carry output. As shown in Figure 7, the first LUT uses the carry-in signal and two data inputs from the LAB local interconnect to generate a combinatorial or registered output. For example, when implementing an adder, this output is the sum of three signals: `DATA1`, `DATA2`, and carry-in. The second LUT uses the same three signals to generate a carry-out signal, thereby creating a carry chain. The arithmetic mode also supports simultaneous use of the cascade chain.

The Altera software implements logic functions to use the arithmetic mode automatically where appropriate; the designer does not have to decide how the carry chain will be used.

Counter Mode

The counter mode offers counter enable, synchronous up/down control, synchronous clear, and synchronous load options. The counter enable and synchronous up/down control signals are generated from the data inputs of the LAB local interconnect. The synchronous clear and synchronous load options are LAB-wide signals that affect all registers in the LAB. Consequently, if any of the LEs in a LAB use counter mode, other LEs in that LAB must be used as part of the same counter or be used for a combinatorial function. In addition, the Altera software automatically places registers that are not in the counter into other LABs.

The counter mode uses two 3-input LUTs: one generates the counter data and the other generates the fast carry bit. A 2-to-1 multiplexer provides synchronous loading, and another `AND` gate provides synchronous clearing. If the cascade function is used by an LE in counter mode, the synchronous clear or load will override any signal carried on the cascade chain. The synchronous clear overrides the synchronous load.

EPF6024ATC144-2 Intel IC FPGA 117 I/O 144TQFP

Either the counter enable or the up/down control may be used for a given counter. Moreover, the synchronous load can be used as a count enable by routing the register output into the data input automatically when requested by the designer.

The second LE of each LAB has a special function for counter mode; the carry-in of the LE can be driven by a fast feedback path from the register. This function gives a faster counter speed for counter carry chains starting in the second LE of an LAB.

The Altera software implements functions to use the counter mode automatically where appropriate. The designer does not have to decide how the carry chain will be used.

Internal Tri-State Emulation

Internal tri-state emulation provides internal tri-states without the limitations of a physical tri-state bus. In a physical tri-state bus, the tri-state buffers' output enable (OE) signals select which signal drives the bus. However, if multiple OE signals are active, contending signals can be driven onto the bus. Conversely, if no OE signals are active, the bus will float. Internal tri-state emulation resolves contending tri-state buffers to a low value and floating buses to a high value, thereby eliminating these problems. The Altera software automatically implements tri-state bus functionality with a multiplexer.

Clear & Preset Logic Control

Logic for the programmable register's clear and preset functions is controlled by the LAB-wide signals `LABCTRL1` and `LABCTRL2`. The LE register has an asynchronous clear that can implement an asynchronous preset. Either `LABCTRL1` or `LABCTRL2` can control the asynchronous clear or preset. Because the clear and preset functions are active-low, the Altera software automatically assigns a logic high to an unused clear or preset signal. The clear and preset logic is implemented in either the asynchronous clear or asynchronous preset mode, which is chosen during design entry (see Figure 8).

EPF6024ATC144-2 Intel IC FPGA 117 I/O 144TQFP

Figure 8. LE Clear & Preset Modes

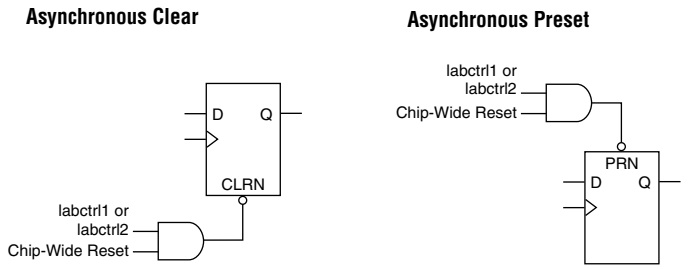

Asynchronous Clear

The flipflop can be cleared by either `LABCTRL1` or `LABCTRL2`.

Asynchronous Preset

An asynchronous preset is implemented with an asynchronous clear. The Altera software provides preset control by using the clear and inverting the input and output of the register. Inversion control is available for the inputs to both LEs and IOEs. Therefore, this technique can be used when a register drives logic or drives a pin.

In addition to the two clear and preset modes, FLEX 6000 devices provide a chip-wide reset pin (`DEV_CLRn`) that can reset all registers in the device. The option to use this pin is set in the Altera software before compilation. The chip-wide reset overrides all other control signals. Any register with an asynchronous preset will be preset when the chip-wide reset is asserted because of the inversion technique used to implement the asynchronous preset.

The Altera software can use a programmable `NOT`-gate push-back technique to emulate simultaneous preset and clear or asynchronous load. However, this technique uses an additional three LEs per register.

FastTrack Interconnect

In the FLEX 6000 OptiFLEX architecture, connections between LEs and device I/O pins are provided by the FastTrack Interconnect, a series of continuous horizontal and vertical routing channels that traverse the device. This global routing structure provides predictable performance, even for complex designs. In contrast, the segmented routing in FPGAs requires switch matrices to connect a variable number of routing paths, increasing the delays between logic resources and reducing performance.

EPF6024ATC144-2 Intel IC FPGA 117 I/O 144TQFP

The FastTrack Interconnect consists of column and row interconnect channels that span the entire device. Each row of LABs is served by a dedicated row interconnect, which routes signals between LABs in the same row, and also routes signals from I/O pins to LABs. Additionally, the local interconnect routes signals between LEs in the same LAB and in adjacent LABs. The column interconnect routes signals between rows and routes signals from I/O pins to rows.

LEs 1 through 5 of an LAB drive the local interconnect to the right, while LEs 6 through 10 drive the local interconnect to the left. The `DATA1` and `DATA3` inputs of each LE are driven by the local interconnect to the left; `DATA2` and `DATA4` are driven by the local interconnect to the right. The local interconnect also routes signals from LEs to I/O pins. Figure 9 shows an overview of the FLEX 6000 interconnect architecture. LEs in the first and last columns have drivers on both sides so that all LEs in the LAB can drive I/O pins via the local interconnect.

Figure 9. FastTrack Interconnect Architecture

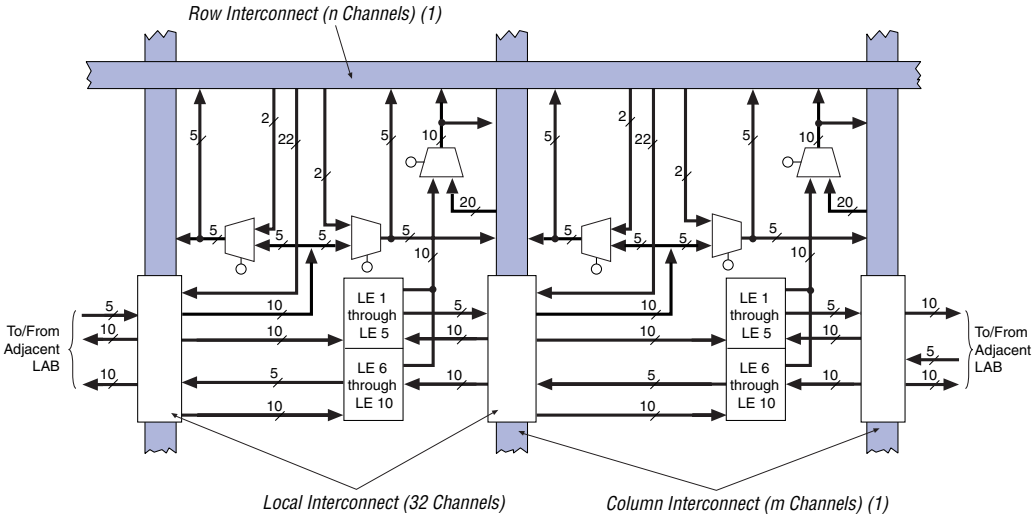

Note:

(1) For EPF6010A, EPF6016, and EPF6016A devices, n = 144 channels and m = 20 channels; for EPF6024A devices, n = 186 channels and m = 30 channels.

EPF6024ATC144-2 Intel IC FPGA 117 I/O 144TQFP

A row channel can be driven by an LE or by one of two column channels. These three signals feed a 3-to-1 multiplexer that connects to six specific row channels. Row channels drive into the local interconnect via multiplexers.

Each column of LABs is served by a dedicated column interconnect. The LEs in an LAB can drive the column interconnect. The LEs in an LAB, a column IOE, or a row interconnect can drive the column interconnect. The column interconnect can then drive another row's interconnect to route the signals to other LABs in the device. A signal from the column interconnect must be routed to the row interconnect before it can enter an LAB.

Each LE has a FastTrack Interconnect output and a local output. The FastTrack interconnect output can drive six row and two column lines directly; the local output drives the local interconnect. Each local interconnect channel driven by an LE can drive four row and two column channels. This feature provides additional flexibility, because each LE can drive any of ten row lines and four column lines.

In addition, LEs can drive global control signals. This feature is useful for distributing internally generated clock, asynchronous clear, and asynchronous preset signals. A pin-driven global signal can also drive data signals, which is useful for high-fan-out data signals.

Each LAB drives two groups of local interconnects, which allows an LE to drive two LABs, or 20 LEs, via the local interconnect. The row-to-local multiplexers are used more efficiently, because the multiplexers can now drive two LABs. Figure 10 shows how an LAB connects to row and column interconnects.

EPF6024ATC144-2 Intel IC FPGA 117 I/O 144TQFP

Figure 10. LAB Connections to Row & Column Interconnects

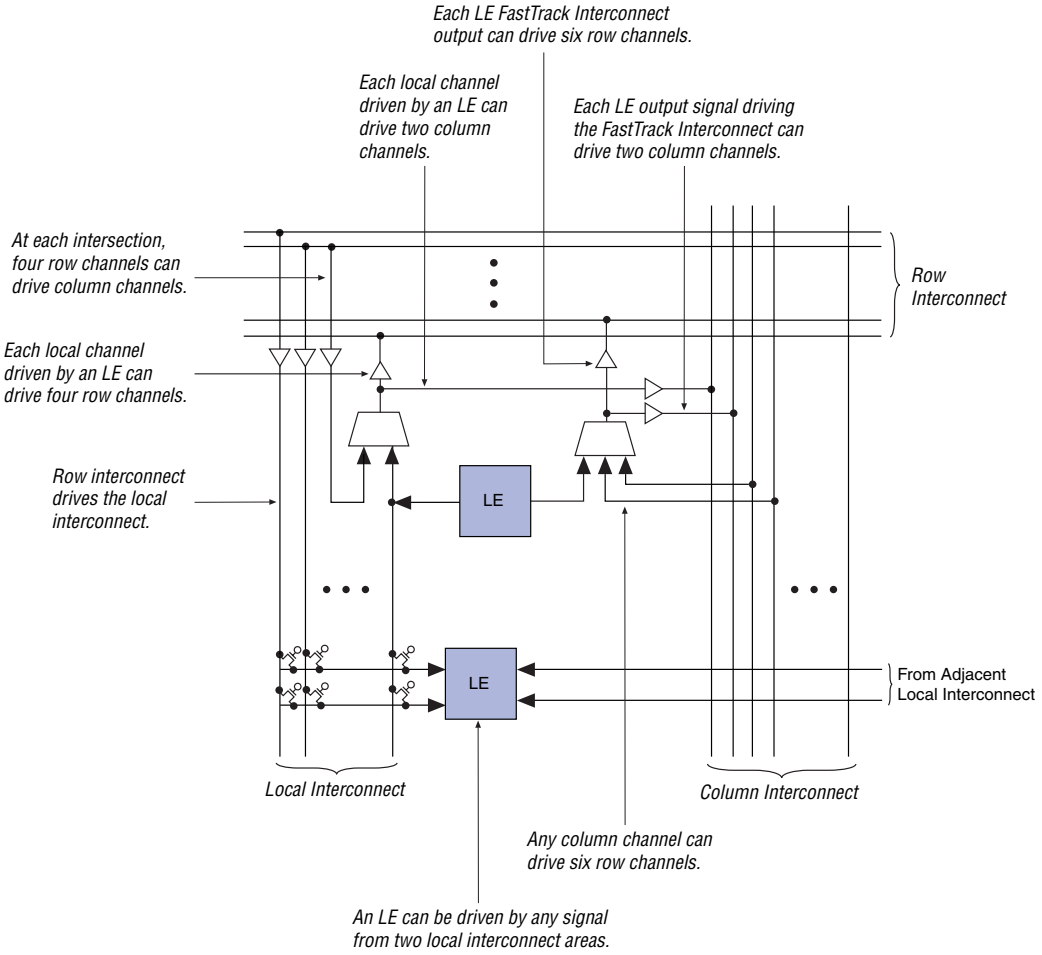

For improved routability, the row interconnect consists of full-length and half-length channels. The full-length channels connect to all LABs in a row; the half-length channels connect to the LABs in half of the row. In addition to providing a predictable, row-wide interconnect, this architecture provides increased routing resources. Two neighboring LABs can be connected using a half-length channel, which saves the other half of the channel for the other half of the row. One-third of the row channels are half-length channels.

EPF6024ATC144-2 Intel IC FPGA 117 I/O 144TQFP

Table 5 summarizes the FastTrack Interconnect resources available in each FLEX 6000 device.

Table 5. FLEX 6000 FastTrack Interconnect Resources

Device	Rows	Channels per Row	Columns	Channels per Column
EPF6010A	4	144	22	20
EPF6016 EPF6016A	6	144	22	20
EPF6024A	7	186	28	30

In addition to general-purpose I/O pins, FLEX 6000 devices have four dedicated input pins that provide low-skew signal distribution across the device. These four inputs can be used for global clock and asynchronous clear control signals. These signals are available as control signals for all LEs in the device. The dedicated inputs can also be used as general-purpose data inputs because they can feed the local interconnect of each LAB in the device. Using dedicated inputs to route data signals provides a fast path for high fan-out signals.

The local interconnect from LABs located at either end of two rows can drive a global control signal. For instance, in an EPF6016 device, LABs C1, D1, C22, and D22 can all drive global control signals. When an LE drives a global control signal, the dedicated input pin that drives that signal cannot be used. Any LE in the device can drive a global control signal by driving the FastTrack Interconnect into the appropriate LAB. To minimize delay, however, the Altera software places the driving LE in the appropriate LAB. The LE-driving-global signal feature is optimized for speed for control signals; regular data signals are better routed on the FastTrack Interconnect and do not receive any advantage from being routed on global signals. This LE-driving-global control signal feature is controlled by the designer and is not used automatically by the Altera software. See Figure 11.

EPF6024ATC144-2 Intel IC FPGA 117 I/O 144TQFP

Figure 11. Global Clock & Clear Distribution *Note (1)*

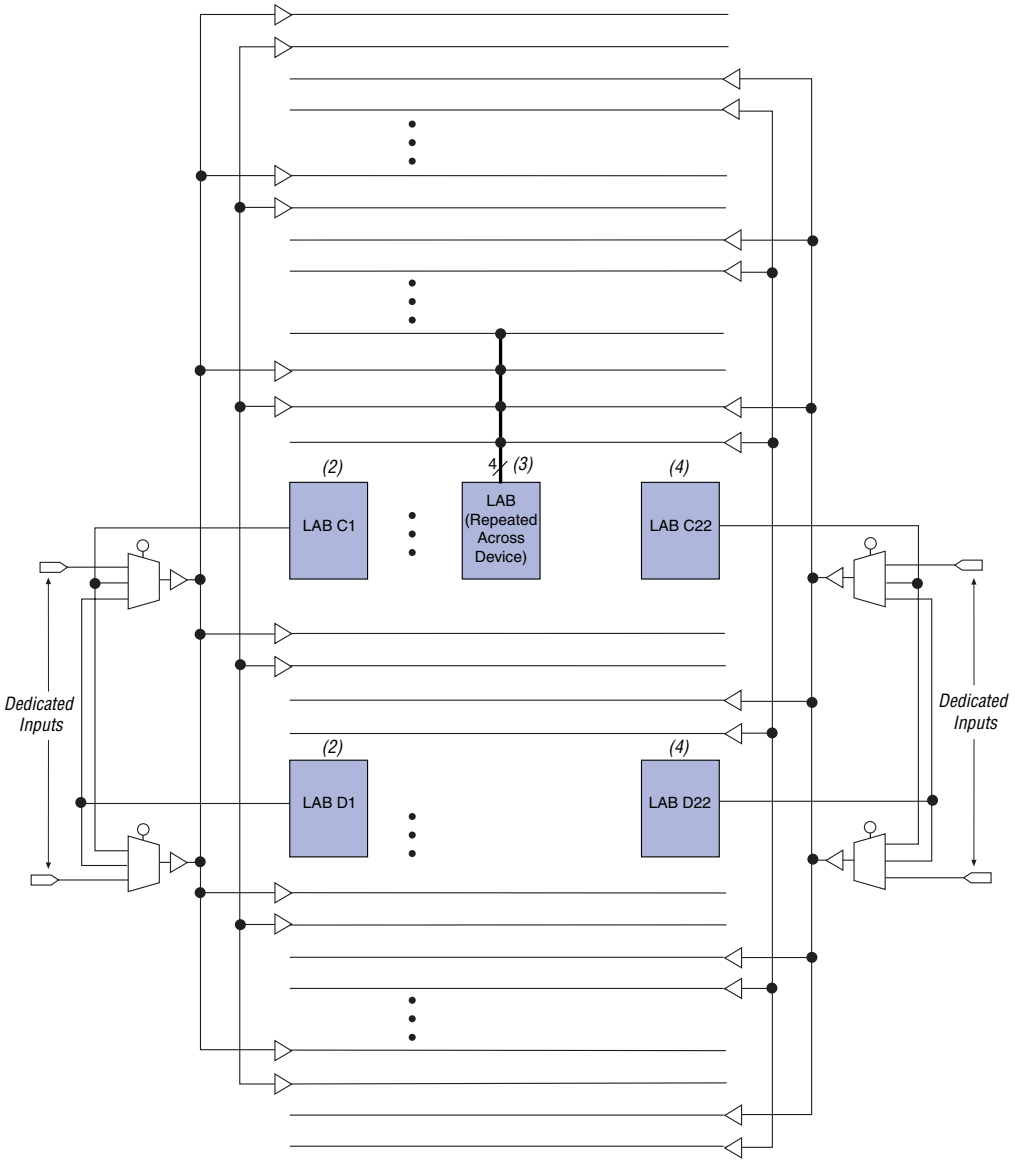

Notes:

(1) The global clock and clear distribution signals are shown for EPF6016 and EPF6016A devices. In EPF6010A devices, LABs in rows B and C drive global signals. In EPF6024A devices, LABs in rows C and E drive global signals.

(2) The local interconnect from LABs C1 and D1 can drive two global control signals on the left side.

(3) Global signals drive into every LAB as clock, asynchronous clear, preset, and data signals.

(4) The local interconnect from LABs C22 and D22 can drive two global control signals on the right side.

EPF6024ATC144-2 Intel IC FPGA 117 I/O 144TQFP

I/O Elements

An IOE contains a bidirectional I/O buffer and a tri-state buffer. IOEs can be used as input, output, or bidirectional pins. An IOE receives its data signals from the adjacent local interconnect, which can be driven by a row or column interconnect (allowing any LE in the device to drive the IOE) or by an adjacent LE (allowing fast clock-to-output delays). A FastFLEX™ I/O pin is a row or column output pin that receives its data signals from the adjacent local interconnect driven by an adjacent LE. The IOE receives its output enable signal through the same path, allowing individual output enables for every pin and permitting emulation of open-drain buffers. The Altera Compiler uses programmable inversion to invert the data or output enable signals automatically where appropriate. Open-drain emulation is provided by driving the data input low and toggling the OE of each IOE. This emulation is possible because there is one OE per pin.

A chip-wide output enable feature allows the designer to disable all pins of the device by asserting one pin (`DEV_OE`). This feature is useful during board debugging or testing.

Figure 12 shows the IOE block diagram.

Figure 12. IOE Block Diagram

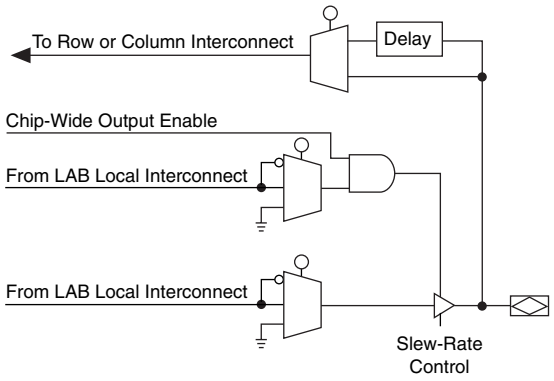

EPF6024ATC144-2 Intel IC FPGA 117 I/O 144TQFP

Each IOE drives a row or column interconnect when used as an input or bidirectional pin. A row IOE can drive up to six row lines; a column IOE can drive up to two column lines. The input path from the I/O pad to the FastTrack Interconnect has a programmable delay element that can be used to guarantee a zero hold time. Depending on the placement of the IOE relative to what it is driving, the designer may choose to turn on the programmable delay to ensure a zero hold time. Figure 13 shows how an IOE connects to a row interconnect, and Figure 14 shows how an IOE connects to a column interconnect.

Figure 13. IOE Connection to Row Interconnect

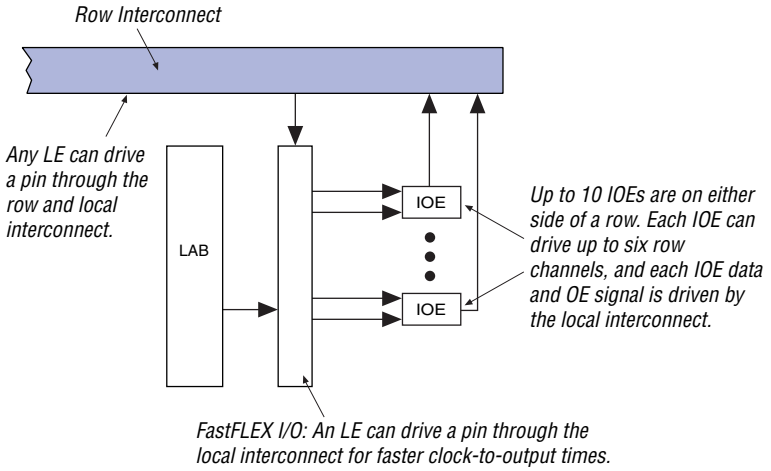

EPF6024ATC144-2 Intel IC FPGA 117 I/O 144TQFP

Figure 14. IOE Connection to Column Interconnect

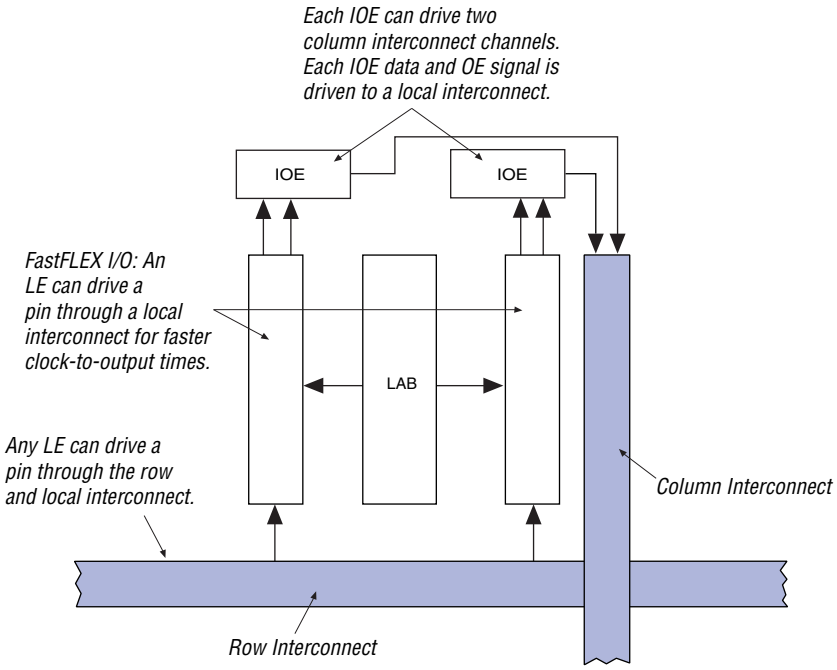

SameFrame Pin-Outs

3.3-V FLEX 6000 devices support the SameFrame pin-out feature for FineLine BGA packages. The SameFrame pin-out feature is the arrangement of balls on FineLine BGA packages such that the lower-ball-count packages form a subset of the higher-ball-count packages. SameFrame pin-outs provide the flexibility to migrate not only from device to device within the same package, but also from one package to another. A given printed circuit board (PCB) layout can support multiple device density/package combinations. For example, a single board layout can support an EPF6016A device in a 100-pin FineLine BGA package or an EPF6024A device in a 256-pin FineLine BGA package.

The Altera software packages provide support to design PCBs with SameFrame pin-out devices. Devices can be defined for present and future use. The Altera software packages generate pin-outs describing how to lay out a board to take advantage of this migration (see Figure 15).

EPF6024ATC144-2 Intel IC FPGA 117 I/O 144TQFP

Figure 15. SameFrame Pin-Out Example

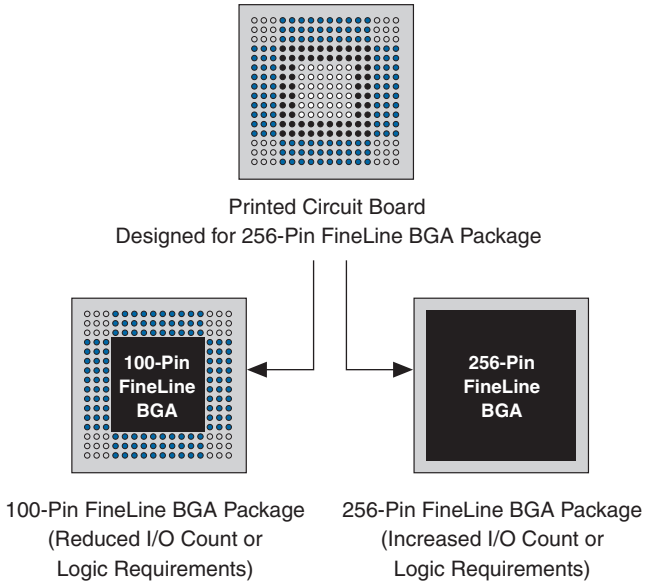

Table 6 lists the 3.3-V FLEX 6000 devices with the SameFrame pin-out feature.

Table 6. 3.3-V FLEX 6000 Devices with SameFrame Pin-Outs

Device	100-Pin FineLine BGA	256-Pin FineLine BGA
EPF6016A	v	v
EPF6024A		v

Output Configuration

This section discusses slew-rate control, the MultiVolt I/O interface, power sequencing, and hot-socketing for FLEX 6000 devices.

Slew-Rate Control

The output buffer in each IOE has an adjustable output slew-rate that can be configured for low-noise or high-speed performance. A slower slew-rate reduces system noise and adds a maximum delay of 6.8 ns. The fast slew-rate should be used for speed-critical outputs in systems that are adequately protected against noise. Designers can specify the slew-rate on a pin-by-pin basis during design entry or assign a default slew rate to all pins on a device-wide basis. The slew-rate setting affects only the falling edge of the output.

EPF6024ATC144-2 Intel IC FPGA 117 I/O 144TQFP

MultiVolt I/O Interface

The FLEX 6000 device architecture supports the MultiVolt I/O interface feature, which allows FLEX 6000 devices to interface with systems of differing supply voltages. The EPF6016 device can be set for 3.3-V or 5.0-V I/O pin operation. This device has one set of V_{CC} pins for internal operation and input buffers (VCCINT), and another set for output drivers (VCCIO).

The VCCINT pins on 5.0-V FLEX 6000 devices must always be connected to a 5.0-V power supply. With a 5.0-V V_{CCINT} level, input voltages are at TTL levels and are therefore compatible with 3.3-V and 5.0-V inputs.

The VCCIO pins on 5.0-V FLEX 6000 devices can be connected to either a 3.3-V or 5.0-V power supply, depending on the output requirements. When the VCCIO pins are connected to a 5.0-V power supply, the output levels are compatible with 5.0-V systems. When the VCCIO pins are connected to a 3.3-V power supply, the output high is 3.3 V and is therefore compatible with 3.3-V or 5.0-V systems. Devices operating with V_{CCIO} levels lower than 4.75 V incur a nominally greater timing delay of t_{OD2} instead of t_{OD1}.

On 3.3-V FLEX 6000 devices, the VCCINT pins must be connected to a 3.3-V power supply. Additionally, 3.3-V FLEX 6000A devices can interface with 2.5-V, 3.3-V, or 5.0-V systems when the VCCIO pins are tied to 2.5 V. The output can drive 2.5-V systems, and the inputs can be driven by 2.5-V, 3.3-V, or 5.0-V systems. When the VCCIO pins are tied to 3.3 V, the output can drive 3.3-V or 5.0-V systems. MultiVolt I/Os are not supported on 100-pin TQFP or 100-pin FineLine BGA packages.

Table 7 describes FLEX 6000 MultiVolt I/O support.

Table 7. FLEX 6000 MultiVolt I/O Support

V_{CCINT} (V)	V_{CCIO} (V)	Input Signal (V)			Output Signal (V)		
		2.5	3.3	5.0	2.5	3.3	5.0
3.3	2.5	v	v	v	v		
3.3	3.3	v	v	v	v *(1)*	v	v
5.0	3.3		v	v		v	v
5.0	5.0		v	v			v

Note:
(1) When V_{CCIO} = 3.3 V, a FLEX 6000 device can drive a 2.5-V device that has 3.3-V tolerant inputs.

EPF6024ATC144-2 Intel IC FPGA 117 I/O 144TQFP

Open-drain output pins on 5.0-V or 3.3-V FLEX 6000 devices (with a pull-up resistor to the 5.0-V supply) can drive 5.0-V CMOS input pins that require a V_{IH} of 3.5 V. When the open-drain pin is active, it will drive low. When the pin is inactive, the trace will be pulled up to 5.0 V by the resistor. The open-drain pin will only drive low or tri-state; it will never drive high. The rise time is dependent on the value of the pull-up resistor and load impedance. The I_{OL} current specification should be considered when selecting a pull-up resistor.

Output pins on 5.0-V FLEX 6000 devices with V_{CCIO} = 3.3 V or 5.0 V (with a pull-up resistor to the 5.0-V supply) can also drive 5.0-V CMOS input pins. In this case, the pull-up transistor will turn off when the pin voltage exceeds 3.3 V. Therefore, the pin does not have to be open-drain.

Power Sequencing & Hot-Socketing

Because FLEX 6000 family devices can be used in a mixed-voltage environment, they have been designed specifically to tolerate any possible power-up sequence. The V_{CCIO} and V_{CCINT} power planes can be powered in any order.

Signals can be driven into 3.3-V FLEX 6000 devices before and during power up without damaging the device. Additionally, FLEX 6000 devices do not drive out during power up. Once operating conditions are reached, FLEX 6000 devices operate as specified by the user.

IEEE Std. 1149.1 (JTAG) Boundary-Scan Support

All FLEX 6000 devices provide JTAG BST circuitry that comply with the IEEE Std. 1149.1-1990 specification. Table 8 shows JTAG instructions for FLEX 6000 devices. JTAG BST can be performed before or after configuration, but not during configuration (except when you disable JTAG support in user mode).

1 See *Application Note 39 (IEEE 1149.1 (JTAG) Boundary-Scan Testing in Altera Devices)* for more information on JTAG BST circuitry.

Table 8. FLEX 6000 JTAG Instructions

JTAG Instruction	Description
SAMPLE/PRELOAD	Allows a snapshot of the signals at the device pins to be captured and examined during normal device operation, and permits an initial data pattern to be output at the device pins.
EXTEST	Allows the external circuitry and board-level interconnections to be tested by forcing a test pattern at the output pins and capturing test result at the input pins.
BYPASS	Places the 1-bit bypass register between the `TDI` and `TDO` pins, which allows the BST data to pass synchronously through the selected device to adjacent devices during normal device operation.

EPF6024ATC144-2 Intel IC FPGA 117 I/O 144TQFP

The instruction register length for FLEX 6000 devices is three bits. Table 9 shows the boundary-scan register length for FLEX 6000 devices.

Table 9. FLEX 6000 Device Boundary-Scan Register Length

Device	Boundary-Scan Register Length
EPF6010A	522
EPF6016	621
EPF6016A	522
EPF6024A	666

FLEX 6000 devices include a weak pull-up on JTAG pins.

f See *Application Note 39 (IEEE 1149.1 (JTAG) Boundary-Scan Testing in Altera Devices)* for more information.

Figure 16 shows the timing requirements for the JTAG signals.

Figure 16. JTAG Waveforms

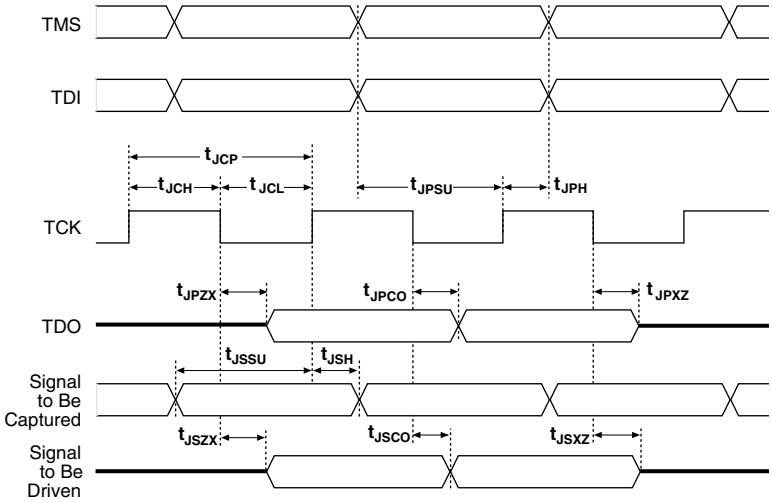

Table 10 shows the JTAG timing parameters and values for FLEX 6000 devices.

EPF6024ATC144-2 Intel IC FPGA 117 I/O 144TQFP

Table 10. JTAG Timing Parameters & Values

Symbol	Parameter	Min	Max	Unit
t_{JCP}	TCK clock period	100		ns
t_{JCH}	TCK clock high time	50		ns
t_{JCL}	TCK clock low time	50		ns
t_{JPSU}	JTAG port setup time	20		ns
t_{JPH}	JTAG port hold time	45		ns
t_{JPCO}	JTAG port clock-to-output		25	ns
t_{JPZX}	JTAG port high impedance to valid output		25	ns
t_{JPXZ}	JTAG port valid output to high impedance		25	ns
t_{JSSU}	Capture register setup time	20		ns
t_{JSH}	Capture register hold time	45		ns
t_{JSCO}	Update register clock-to-output		35	ns
t_{JSZX}	Update register high impedance to valid output		35	ns
t_{JSXZ}	Update register valid output to high impedance		35	ns

Generic Testing

Each FLEX 6000 device is functionally tested. Complete testing of each configurable SRAM bit and all logic functionality ensures 100% configuration yield. AC test measurements for FLEX 6000 devices are made under conditions equivalent to those shown in Figure 17. Multiple test patterns can be used to configure devices during all stages of the production flow.

Figure 17. AC Test Conditions

Power supply transients can affect AC measurements. Simultaneous transitions of multiple outputs should be avoided for accurate measurement. Threshold tests must not be performed under AC conditions. Large-amplitude, fast-ground-current transients normally occur as the device outputs discharge the load capacitances. When these transients flow through the parasitic inductance between the device ground pin and the test system ground, significant reductions in observable noise immunity can result. Numbers without parentheses are for 5.0-V devices or outputs. Numbers in parentheses are for 3.3-V devices or outputs. Numbers in brackets are for 2.5-V devices or outputs.

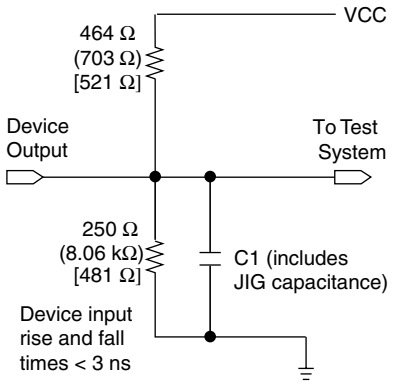

EPF6024ATC144-2 Intel IC FPGA 117 I/O 144TQFP

Operating Conditions

Tables 11 through 18 provide information on absolute maximum ratings, recommended operating conditions, operating conditions, and capacitance for 5.0-V and 3.3-V FLEX 6000 devices.

Table 11. FLEX 6000 5.0-V Device Absolute Maximum Ratings *Note (1)*

Symbol	Parameter	Conditions	Min	Max	Unit
V_{CC}	Supply voltage	With respect to ground *(2)*	–2.0	7.0	V
V_I	DC input voltage		–2.0	7.0	V
I_{OUT}	DC output current, per pin		–25	25	mA
T_{STG}	Storage temperature	No bias	–65	150	° C
T_{AMB}	Ambient temperature	Under bias	–65	135	° C
T_J	Junction temperature	PQFP, TQFP, and BGA packages		135	° C

Table 12. FLEX 6000 5.0-V Device Recommended Operating Conditions

Symbol	Parameter	Conditions	Min	Max	Unit
V_{CCINT}	Supply voltage for internal logic and input buffers	*(3)*, *(4)*	4.75 (4.50)	5.25 (5.50)	V
V_{CCIO}	Supply voltage for output buffers, 5.0-V operation	*(3)*, *(4)*	4.75 (4.50)	5.25 (5.50)	V
	Supply voltage for output buffers, 3.3-V operation	*(3)*, *(4)*	3.00 (3.00)	3.60 (3.60)	V
V_I	Input voltage		–0.5	V_{CCINT} + 0.5	V
V_O	Output voltage		0	V_{CCIO}	V
T_J	Operating temperature	For commercial use	0	85	° C
		For industrial use	–40	100	° C
t_R	Input rise time			40	ns
t_F	Input fall time			40	ns

EPF6024ATC144-2 Intel IC FPGA 117 I/O 144TQFP

Table 13. FLEX 6000 5.0-V Device DC Operating Conditions *Notes (5), (6)*

Symbol	Parameter	Conditions	Min	Typ	Max	Unit
V_{IH}	High-level input voltage		2.0		V_{CCINT} + 0.5	V
V_{IL}	Low-level input voltage		–0.5		0.8	V
V_{OH}	5.0-V high-level TTL output voltage	I_{OH} = –8 mA DC, V_{CCIO} = 4.75 V *(7)*	2.4			V
	3.3-V high-level TTL output voltage	I_{OH} = –8 mA DC, V_{CCIO} = 3.00 V *(7)*	2.4			V
	3.3-V high-level CMOS output voltage	I_{OH} = –0.1 mA DC, V_{CCIO} = 3.00 V *(7)*	V_{CCIO} – 0.2			V
V_{OL}	5.0-V low-level TTL output voltage	I_{OL} = 8 mA DC, V_{CCIO} = 4.75 V *(8)*			0.45	V
	3.3-V low-level TTL output voltage	I_{OL} = 8 mA DC, V_{CCIO} = 3.00 V *(8)*			0.45	V
	3.3-V low-level CMOS output voltage	I_{OL} = 0.1 mA DC, V_{CCIO} = 3.00 V *(8)*			0.2	V
I_I	Input pin leakage current	V_I = V_{CC} or ground *(8)*	–10		10	µA
I_{OZ}	Tri-stated I/O pin leakage current	V_O = V_{CC} or ground *(8)*	–40		40	µA
I_{CC0}	V_{CC} supply current (standby)	V_I = ground, no load		0.5	5	mA

Table 14. FLEX 6000 5.0-V Device Capacitance *Note (9)*

Symbol	Parameter	Conditions	Min	Max	Unit
C_{IN}	Input capacitance for I/O pin	V_{IN} = 0 V, f = 1.0 MHz		8	pF
C_{INCLK}	Input capacitance for dedicated input	V_{IN} = 0 V, f = 1.0 MHz		12	pF
C_{OUT}	Output capacitance	V_{OUT} = 0 V, f = 1.0 MHz		8	pF

Notes to tables:

(1) See the *Operating Requirements for Altera Devices Data Sheet*.
(2) Minimum DC input is –0.5 V. During transitions, the inputs may undershoot to –2.0 V or overshoot to 7.0 V for input currents less than 100 mA and periods shorter than 20 ns.
(3) Numbers in parentheses are for industrial-temperature-range devices.
(4) Maximum V_{CC} rise time to 100 ms. V_{CC} must rise monotonically.
(5) Typical values are for T_A = 25° C and V_{CC} = 5.0 V.
(6) These values are specified under the FLEX 6000 Recommended Operating Conditions shown in Table 12 on page 31.
(7) The I_{OH} parameter refers to high-level TTL or CMOS output current.
(8) The I_{OL} parameter refers to low-level TTL, PCI, or CMOS output current. This parameter applies to open-drain pins as well as output pins.
(9) Capacitance is sample-tested only.

EPF6024ATC144-2 Intel IC FPGA 117 I/O 144TQFP

Table 15. FLEX 6000 3.3-V Device Absolute Maximum Ratings *Note (1)*

Symbol	Parameter	Conditions	Min	Max	Unit
V_{CC}	Supply voltage	With respect to ground *(2)*	–0.5	4.6	V
V_I	DC input voltage		–2.0	5.75	V
I_{OUT}	DC output current, per pin		–25	25	mA
T_{STG}	Storage temperature	No bias	–65	150	° C
T_{AMB}	Ambient temperature	Under bias	–65	135	° C
T_J	Junction temperature	PQFP, PLCC, and BGA packages		135	° C

Table 16. FLEX 6000 3.3-V Device Recommended Operating Conditions

Symbol	Parameter	Conditions	Min	Max	Unit
V_{CCINT}	Supply voltage for internal logic and input buffers	*(3)*, *(4)*	3.00 (3.00)	3.60 (3.60)	V
V_{CCIO}	Supply voltage for output buffers, 3.3-V operation	*(3)*, *(4)*	3.00 (3.00)	3.60 (3.60)	V
	Supply voltage for output buffers, 2.5-V operation	*(3)*, *(4)*	2.30 (2.30)	2.70 (2.70)	V
V_I	Input voltage		–0.5	5.75	V
V_O	Output voltage		0	V_{CCIO}	V
T_J	Operating temperature	For commercial use	0	85	° C
		For industrial use	–40	100	° C
t_R	Input rise time			40	ns
t_F	Input fall time			40	ns

EPF6024ATC144-2 Intel IC FPGA 117 I/O 144TQFP

Table 17. FLEX 6000 3.3-V Device DC Operating Conditions *Notes (5), (6)*

Symbol	Parameter	Conditions	Min	Typ	Max	Unit
V_{IH}	High-level input voltage		1.7		5.75	V
V_{IL}	Low-level input voltage		–0.5		0.8	V
V_{OH}	3.3-V high-level TTL output voltage	I_{OH} = –8 mA DC, V_{CCIO} = 3.00 V *(7)*	2.4			V
	3.3-V high-level CMOS output voltage	I_{OH} = –0.1 mA DC, V_{CCIO} = 3.00 V *(7)*	V_{CCIO} – 0.2			V
	2.5-V high-level output voltage	I_{OH} = –100 µA DC, V_{CCIO} = 2.30 V *(7)*	2.1			V
		I_{OH} = –1 mA DC, V_{CCIO} = 2.30 V *(7)*	2.0			V
		I_{OH} = –2 mA DC, V_{CCIO} = 2.30 V *(7)*	1.7			V
V_{OL}	3.3-V low-level TTL output voltage	I_{OL} = 8 mA DC, V_{CCIO} = 3.00 V *(8)*			0.45	V
	3.3-V low-level CMOS output voltage	I_{OL} = 0.1 mA DC, V_{CCIO} = 3.00 V *(8)*			0.2	V
	2.5-V low-level output voltage	I_{OL} = 100 µA DC, V_{CCIO} = 2.30 V *(8)*			0.2	V
		I_{OL} = 1 mA DC, V_{CCIO} = 2.30 V *(8)*			0.4	V
		I_{OL} = 2 mA DC, V_{CCIO} = 2.30 V *(8)*			0.7	V
I_I	Input pin leakage current	V_I = 5.3 V to ground *(8)*	–10		10	µA
I_{OZ}	Tri-stated I/O pin leakage current	V_O = 5.3 V to ground *(8)*	–10		10	µA
I_{CC0}	V_{CC} supply current (standby)	V_I = ground, no load		0.5	5	mA

Table 18. FLEX 6000 3.3-V Device Capacitance *Note (9)*

Symbol	Parameter	Conditions	Min	Max	Unit
C_{IN}	Input capacitance for I/O pin	V_{IN} = 0 V, f = 1.0 MHz		8	pF
C_{INCLK}	Input capacitance for dedicated input	V_{IN} = 0 V, f = 1.0 MHz		12	pF
C_{OUT}	Output capacitance	V_{OUT} = 0 V, f = 1.0 MHz		8	pF

Notes to tables:

(1) See the *Operating Requirements for Altera Devices Data Sheet*.
(2) The minimum DC input voltage is –0.5 V. During transitions, the inputs may undershoot to –2.0 V or overshoot to 5.75 V for input currents less than 100 mA and periods shorter than 20 ns.
(3) Numbers in parentheses are for industrial-temperature-range devices.
(4) Maximum V_{CC} rise time is 100 ms. V_{CC} must rise monotonically.
(5) Typical values are for T_A = 25° C and V_{CC} = 3.3 V.
(6) These values are specified under Table 16 on page 33.
(7) The I_{OH} parameter refers to high-level TTL or CMOS output current.
(8) The I_{OL} parameter refers to low-level TTL, PCI, or CMOS output current. This parameter applies to open-drain pins as well as output pins.
(9) Capacitance is sample-tested only.

EPF6024ATC144-2 Intel IC FPGA 117 I/O 144TQFP

Figure 18 shows the typical output drive characteristics of 5.0-V and 3.3-V FLEX 6000 devices with 5.0-V, 3.3-V, and 2.5-V V_{CCIO}. When V_{CCIO} = 5.0 V on EPF6016 devices, the output driver is compliant with the ***PCI Local Bus Specification, Revision 2.2*** for 5.0-V operation. When V_{CCIO} = 3.3 V on the EPF6010A and EPF6016A devices, the output driver is compliant with the ***PCI Local Bus Specification, Revision 2.2*** for 3.3-V operation.

Figure 18. Output Drive Characteristics

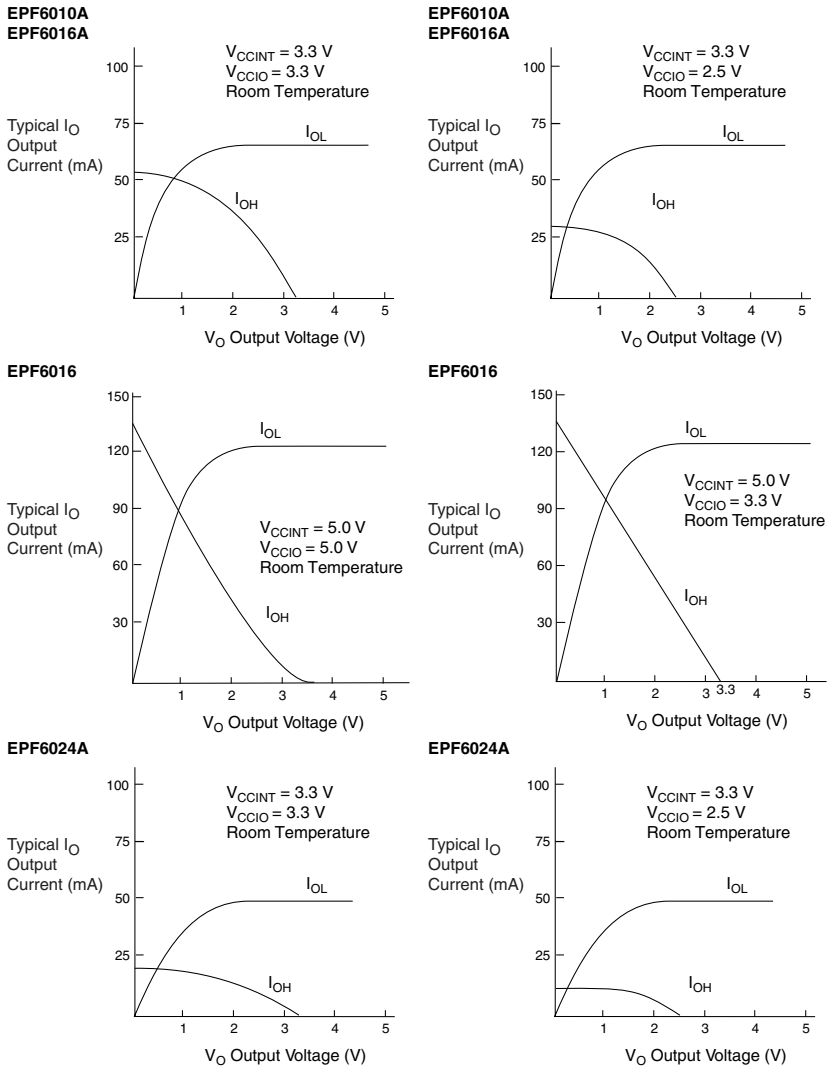

EPF6024ATC144-2 Intel IC FPGA 117 I/O 144TQFP

Timing Model

The continuous, high-performance FastTrack Interconnect routing resources ensure predictable performance and accurate simulation and timing analysis. This predictable performance contrasts with that of FPGAs, which use a segmented connection scheme and therefore have unpredictable performance.

Device performance can be estimated by following the signal path from a source, through the interconnect, to the destination. For example, the registered performance between two LEs on the same row can be calculated by adding the following parameters:

- LE register clock-to-output delay ($t_{CO} + t_{REG_TO_OUT}$)
- Routing delay ($t_{ROW} + t_{LOCAL}$)
- LE LUT delay ($t_{DATA_TO_REG}$)
- LE register setup time (t_{SU})

The routing delay depends on the placement of the source and destination LEs. A more complex registered path may involve multiple combinatorial LEs between the source and destination LEs.

Timing simulation and delay prediction are available with the Simulator and Timing Analyzer, or with industry-standard EDA tools. The Simulator offers both pre-synthesis functional simulation to evaluate logic design accuracy and post-synthesis timing simulation with 0.1-ns resolution. The Timing Analyzer provides point-to-point timing delay information, setup and hold time analysis, and device-wide performance analysis.

Figure 19 shows the overall timing model, which maps the possible routing paths to and from the various elements of the FLEX 6000 device.

EPF6024ATC144-2 Intel IC FPGA 117 I/O 144TQFP

Figure 19. FLEX 6000 Timing Model

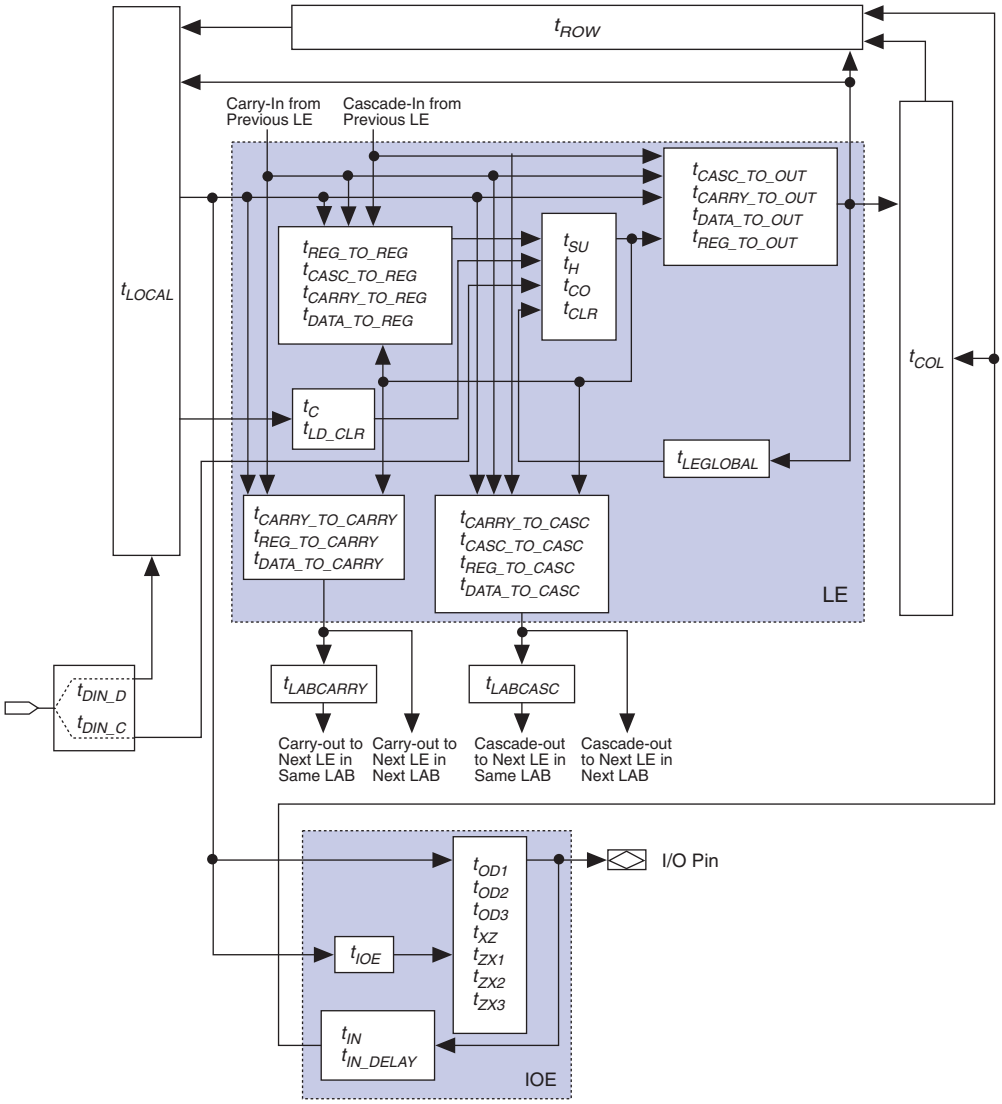

EPF6024ATC144-2 Intel IC FPGA 117 I/O 144TQFP

Tables 19 through 21 describe the FLEX 6000 internal timing microparameters, which are expressed as worst-case values. Using hand calculations, these parameters can be used to estimate design performance. However, before committing designs to silicon, actual worst-case performance should be modeled using timing simulation and timing analysis. Tables 22 and 23 describe FLEX 6000 external timing parameters.

Table 19. LE Timing Microparameters *Note (1)*

Symbol	Parameter	Conditions
$t_{REG_TO_REG}$	LUT delay for LE register feedback in carry chain	
$t_{CASC_TO_REG}$	Cascade-in to register delay	
$t_{CARRY_TO_REG}$	Carry-in to register delay	
$t_{DATA_TO_REG}$	LE input to register delay	
$t_{CASC_TO_OUT}$	Cascade-in to LE output delay	
$t_{CARRY_TO_OUT}$	Carry-in to LE output delay	
$t_{DATA_TO_OUT}$	LE input to LE output delay	
$t_{REG_TO_OUT}$	Register output to LE output delay	
t_{SU}	LE register setup time before clock; LE register recovery time after asynchronous clear	
t_{H}	LE register hold time after clock	
t_{CO}	LE register clock-to-output delay	
t_{CLR}	LE register clear delay	
t_{C}	LE register control signal delay	
t_{LD_CLR}	Synchronous load or clear delay in counter mode	
$t_{CARRY_TO_CARRY}$	Carry-in to carry-out delay	
$t_{REG_TO_CARRY}$	Register output to carry-out delay	
$t_{DATA_TO_CARRY}$	LE input to carry-out delay	
$t_{CARRY_TO_CASC}$	Carry-in to cascade-out delay	
$t_{CASC_TO_CASC}$	Cascade-in to cascade-out delay	
$t_{REG_TO_CASC}$	Register-out to cascade-out delay	
$t_{DATA_TO_CASC}$	LE input to cascade-out delay	
t_{CH}	LE register clock high time	
t_{CL}	LE register clock low time	

EPF6024ATC144-2 Intel IC FPGA 117 I/O 144TQFP

Table 20. IOE Timing Microparameters *Note (1)*

Symbol	Parameter	Conditions
t_{OD1}	Output buffer and pad delay, slow slew rate = off, $V_{CCIO} = V_{CCINT}$	C1 = 35 pF *(2)*
t_{OD2}	Output buffer and pad delay, slow slew rate = off, V_{CCIO} = low voltage	C1 = 35 pF *(3)*
t_{OD3}	Output buffer and pad delay, slow slew rate = on	C1 = 35 pF *(4)*
t_{XZ}	Output buffer disable delay	C1 = 5 pF
t_{ZX1}	Output buffer enable delay, slow slew rate = off, $V_{CCIO} = V_{CCINT}$	C1 = 35 pF *(2)*
t_{ZX2}	Output buffer enable delay, slow slew rate = off, V_{CCIO} = low voltage	C1 = 35 pF *(3)*
t_{ZX3}	IOE output buffer enable delay, slow slew rate = on	C1 = 35 pF *(4)*
t_{IOE}	Output enable control delay	
t_{IN}	Input pad and buffer to FastTrack Interconnect delay	
t_{IN_DELAY}	Input pad and buffer to FastTrack Interconnect delay with additional delay turned on	

Table 21. Interconnect Timing Microparameters *Note (1)*

Symbol	Parameter	Conditions
t_{LOCAL}	LAB local interconnect delay	
t_{ROW}	Row interconnect routing delay	*(5)*
t_{COL}	Column interconnect routing delay	*(5)*
t_{DIN_D}	Dedicated input to LE data delay	*(5)*
t_{DIN_C}	Dedicated input to LE control delay	
$t_{LEGLOBAL}$	LE output to LE control via internally-generated global signal delay	*(5)*
$t_{LABCARRY}$	Routing delay for the carry-out of an LE driving the carry-in signal of a different LE in a different LAB	
$t_{LABCASC}$	Routing delay for the cascade-out signal of an LE driving the cascade-in signal of a different LE in a different LAB	

Table 22. External Reference Timing Parameters

Symbol	Parameter	Conditions
t_1	Register-to-register test pattern	*(6)*
t_{DRR}	Register-to-register delay via 4 LEs, 3 row interconnects, and 4 local interconnects	*(7)*

EPF6024ATC144-2 Intel IC FPGA 117 I/O 144TQFP

Table 23. External Timing Parameters

Symbol	Parameter	Conditions
t_{INSU}	Setup time with global clock at LE register	*(8)*
t_{INH}	Hold time with global clock at LE register	*(8)*
t_{OUTCO}	Clock-to-output delay with global clock with LE register using FastFLEX I/O pin	*(8)*

Notes to tables:

(1) Microparameters are timing delays contributed by individual architectural elements and cannot be measured explicitly.
(2) Operating conditions:
V_{CCIO} = 5.0 V ±5% for commercial use in 5.0-V FLEX 6000 devices.
V_{CCIO} = 5.0 V ±10% for industrial use in 5.0-V FLEX 6000 devices.
V_{CCIO} = 3.3 V ±10% for commercial or industrial use in 3.3-V FLEX 6000 devices.
(3) Operating conditions:
V_{CCIO} = 3.3 V ±10% for commercial or industrial use in 5.0-V FLEX 6000 devices.
V_{CCIO} = 2.5 V ±0.2 V for commercial or industrial use in 3.3-V FLEX 6000 devices.
(4) Operating conditions:
V_{CCIO} = 2.5 V, 3.3 V, or 5.0 V.
(5) These parameters are worst-case values for typical applications. Post-compilation timing simulation and timing analysis are required to determine actual worst-case performance.
(6) This timing parameter shows the delay of a register-to-register test pattern and is used to determine speed grades. There are 12 LEs, including source and destination registers. The row and column interconnects between the registers vary in length.
(7) This timing parameter is shown for reference and is specified by characterization.
(8) This timing parameter is specified by characterization.

Tables 24 through 28 show the timing information for EPF6010A and EPF6016A devices.

Table 24. LE Timing Microparameters for EPF6010A & EPF6016A Devices (Part 1 of 2)

Parameter	Speed Grade						Unit
	-1		-2		-3		
	Min	Max	Min	Max	Min	Max	
$t_{REG_TO_REG}$		1.2		1.3		1.7	ns
$t_{CASC_TO_REG}$		0.9		1.0		1.2	ns
$t_{CARRY_TO_REG}$		0.9		1.0		1.2	ns
$t_{DATA_TO_REG}$		1.1		1.2		1.5	ns
$t_{CASC_TO_OUT}$		1.3		1.4		1.8	ns
$t_{CARRY_TO_OUT}$		1.6		1.8		2.3	ns
$t_{DATA_TO_OUT}$		1.7		2.0		2.5	ns
$t_{REG_TO_OUT}$		0.4		0.4		0.5	ns
t_{SU}	0.9		1.0		1.3		ns
t_{H}	1.4		1.7		2.1		ns

EPF6024ATC144-2 Intel IC FPGA 117 I/O 144TQFP

Table 24. LE Timing Microparameters for EPF6010A & EPF6016A Devices (Part 2 of 2)

Parameter	Speed Grade						Unit
	-1		-2		-3		
	Min	Max	Min	Max	Min	Max	
t_{CO}		0.3		0.4		0.4	ns
t_{CLR}		0.4		0.4		0.5	ns
t_{C}		1.8		2.1		2.6	ns
t_{LD_CLR}		1.8		2.1		2.6	ns
$t_{CARRY_TO_CARRY}$		0.1		0.1		0.1	ns
$t_{REG_TO_CARRY}$		1.6		1.9		2.3	ns
$t_{DATA_TO_CARRY}$		2.1		2.5		3.0	ns
$t_{CARRY_TO_CASC}$		1.0		1.1		1.4	ns
$t_{CASC_TO_CASC}$		0.5		0.6		0.7	ns
$t_{REG_TO_CASC}$		1.4		1.7		2.1	ns
$t_{DATA_TO_CASC}$		1.1		1.2		1.5	ns
t_{CH}	2.5		3.0		3.5		ns
t_{CL}	2.5		3.0		3.5		ns

Table 25. IOE Timing Microparameters for EPF6010A & EPF6016A Devices

Parameter	Speed Grade						Unit
	-1		-2		-3		
	Min	Max	Min	Max	Min	Max	
t_{OD1}		1.9		2.2		2.7	ns
t_{OD2}		4.1		4.8		5.8	ns
t_{OD3}		5.8		6.8		8.3	ns
t_{XZ}		1.4		1.7		2.1	ns
t_{XZ1}		1.4		1.7		2.1	ns
t_{XZ2}		3.6		4.3		5.2	ns
t_{XZ3}		5.3		6.3		7.7	ns
t_{IOE}		0.5		0.6		0.7	ns
t_{IN}		3.6		4.1		5.1	ns
t_{IN_DELAY}		4.8		5.4		6.7	ns

EPF6024ATC144-2 Intel IC FPGA 117 I/O 144TQFP

Table 26. Interconnect Timing Microparameters for EPF6010A & EPF6016A Devices

Parameter	Speed Grade						Unit
	-1		-2		-3		
	Min	Max	Min	Max	Min	Max	
t_{LOCAL}		0.7		0.7		1.0	ns
t_{ROW}		2.9		3.2		3.2	ns
t_{COL}		1.2		1.3		1.4	ns
t_{DIN_D}		5.4		5.7		6.4	ns
t_{DIN_C}		4.3		5.0		6.1	ns
$t_{LEGLOBAL}$		2.6		3.0		3.7	ns
$t_{LABCARRY}$		0.7		0.8		0.9	ns
$t_{LABCASC}$		1.3		1.4		1.8	ns

Table 27. External Reference Timing Parameters for EPF6010A & EPF6016A Devices

Parameter	Device	Speed Grade						Unit
		-1		-2		-3		
		Min	Max	Min	Max	Min	Max	
t_1	EPF6010A		37.6		43.6		53.7	ns
	EPF6016A		38.0		44.0		54.1	ns

Table 28. External Timing Parameters for EPF6010A & EPF6016A Devices

Parameter	Speed Grade						Unit
	-1		-2		-3		
	Min	Max	Min	Max	Min	Max	
t_{INSU}	2.1 *(1)*		2.4 *(1)*		3.3 *(1)*		ns
t_{INH}	0.2 *(2)*		0.3 *(2)*		0.1 *(2)*		ns
t_{OUTCO}	2.0	7.1	2.0	8.2	2.0	10.1	ns

Notes:

(1) Setup times are longer when the *Increase Input Delay* option is turned on. The setup time values are shown with the *Increase Input Delay* option turned off.

(2) Hold time is zero when the *Increase Input Delay* option is turned on.

EPF6024ATC144-2 Intel IC FPGA 117 I/O 144TQFP

Tables 29 through 33 show the timing information for EPF6016 devices.

Table 29. LE Timing Microparameters for EPF6016 Devices

Parameter	Speed Grade				Unit
	-2		-3		
	Min	Max	Min	Max	
$t_{REG_TO_REG}$		2.2		2.8	ns
$t_{CASC_TO_REG}$		0.9		1.2	ns
$t_{CARRY_TO_REG}$		1.6		2.1	ns
$t_{DATA_TO_REG}$		2.4		3.0	ns
$t_{CASC_TO_OUT}$		1.3		1.7	ns
$t_{CARRY_TO_OUT}$		2.4		3.0	ns
$t_{DATA_TO_OUT}$		2.7		3.4	ns
$t_{REG_TO_OUT}$		0.3		0.5	ns
t_{SU}	1.1		1.6		ns
t_{H}	1.8		2.3		ns
t_{CO}		0.3		0.4	ns
t_{CLR}		0.5		0.6	ns
t_{C}		1.2		1.5	ns
t_{LD_CLR}		1.2		1.5	ns
$t_{CARRY_TO_CARRY}$		0.2		0.4	ns
$t_{REG_TO_CARRY}$		0.8		1.1	ns
$t_{DATA_TO_CARRY}$		1.7		2.2	ns
$t_{CARRY_TO_CASC}$		1.7		2.2	ns
$t_{CASC_TO_CASC}$		0.9		1.2	ns
$t_{REG_TO_CASC}$		1.6		2.0	ns
$t_{DATA_TO_CASC}$		1.7		2.1	ns
t_{CH}	4.0		4.0		ns
t_{CL}	4.0		4.0		ns

Table 30. IOE Timing Microparameters for EPF6016 Devices

Parameter	Speed Grade				Unit
	-2		-3		
	Min	Max	Min	Max	
t_{OD1}		2.3		2.8	ns
t_{OD2}		4.6		5.1	ns

EPF6024ATC144-2 Intel IC FPGA 117 I/O 144TQFP

Table 30. IOE Timing Microparameters for EPF6016 Devices

Parameter	Speed Grade				Unit
	-2		-3		
	Min	Max	Min	Max	
t_{OD3}		4.7		5.2	ns
t_{XZ}		2.3		2.8	ns
t_{ZX1}		2.3		2.8	ns
t_{ZX2}		4.6		5.1	ns
t_{ZX3}		4.7		5.2	ns
t_{IOE}		0.5		0.6	ns
t_{IN}		3.3		4.0	ns
t_{IN_DELAY}		4.6		5.6	ns

Table 31. Interconnect Timing Microparameters for EPF6016 Devices

Parameter	Speed Grade				Unit
	-2		-3		
	Min	Max	Min	Max	
t_{LOCAL}		0.8		1.0	ns
t_{ROW}		2.9		3.3	ns
t_{COL}		2.3		2.5	ns
t_{DIN_D}		4.9		6.0	ns
t_{DIN_C}		4.8		6.0	ns
$t_{LEGLOBAL}$		3.1		3.9	ns
$t_{LABCARRY}$		0.4		0.5	ns
$t_{LABCASC}$		0.8		1.0	ns

Table 32. External Reference Timing Parameters for EPF6016 Devices

Parameter	Speed Grade				Unit
	-2		-3		
	Min	Max	Min	Max	
t_1		53.0		65.0	ns
t_{DRR}		16.0		20.0	ns

EPF6024ATC144-2 Intel IC FPGA 117 I/O 144TQFP

Table 33. External Timing Parameters for EPF6016 Devices

Parameter	Speed Grade				Unit
	-2		-3		
	Min	Max	Min	Max	
t_{INSU}	3.2		4.1		ns
t_{INH}	0.0		0.0		ns
t_{OUTCO}	2.0	7.9	2.0	9.9	ns

Tables 34 through 38 show the timing information for EPF6024A devices.

Table 34. LE Timing Microparameters for EPF6024A Devices

Parameter	Speed Grade						Unit
	-1		-2		-3		
	Min	Max	Min	Max	Min	Max	
$t_{REG_TO_REG}$		1.2		1.3		1.6	ns
$t_{CASC_TO_REG}$		0.7		0.8		1.0	ns
$t_{CARRY_TO_REG}$		1.6		1.8		2.2	ns
$t_{DATA_TO_REG}$		1.3		1.4		1.7	ns
$t_{CASC_TO_OUT}$		1.2		1.3		1.6	ns
$t_{CARRY_TO_OUT}$		2.0		2.2		2.6	ns
$t_{DATA_TO_OUT}$		1.8		2.1		2.6	ns
$t_{REG_TO_OUT}$		0.3		0.3		0.4	ns
t_{SU}	0.9		1.0		1.2		ns
t_{H}	1.3		1.4		1.7		ns
t_{CO}		0.2		0.3		0.3	ns
t_{CLR}		0.3		0.3		0.4	ns
t_{C}		1.9		2.1		2.5	ns
t_{LD_CLR}		1.9		2.1		2.5	ns
$t_{CARRY_TO_CARRY}$		0.2		0.2		0.3	ns
$t_{REG_TO_CARRY}$		1.4		1.6		1.9	ns
$t_{DATA_TO_CARRY}$		1.3		1.4		1.7	ns
$t_{CARRY_TO_CASC}$		1.1		1.2		1.4	ns
$t_{CASC_TO_CASC}$		0.7		0.8		1.0	ns
$t_{REG_TO_CASC}$		1.4		1.6		1.9	ns
$t_{DATA_TO_CASC}$		1.0		1.1		1.3	ns
t_{CH}	2.5		3.0		3.5		ns
t_{CL}	2.5		3.0		3.5		ns

EPF6024ATC144-2 Intel IC FPGA 117 I/O 144TQFP

Table 35. IOE Timing Microparameters for EPF6024A Devices

Parameter	Speed Grade						Unit
	-1		-2		-3		
	Min	Max	Min	Max	Min	Max	
t_{OD1}		1.9		2.1		2.5	ns
t_{OD2}		4.0		4.4		5.3	ns
t_{OD3}		7.0		7.8		9.3	ns
t_{XZ}		4.3		4.8		5.8	ns
t_{XZ1}		4.3		4.8		5.8	ns
t_{XZ2}		6.4		7.1		8.6	ns
t_{XZ3}		9.4		10.5		12.6	ns
t_{IOE}		0.5		0.6		0.7	ns
t_{IN}		3.3		3.7		4.4	ns
t_{IN_DELAY}		5.3		5.9		7.0	ns

Table 36. Interconnect Timing Microparameters for EPF6024A Devices

Parameter	Speed Grade						Unit
	-1		-2		-3		
	Min	Max	Min	Max	Min	Max	
t_{LOCAL}		0.8		0.8		1.1	ns
t_{ROW}		3.0		3.1		3.3	ns
t_{COL}		3.0		3.2		3.4	ns
t_{DIN_D}		5.4		5.6		6.2	ns
t_{DIN_C}		4.6		5.1		6.1	ns
$t_{LEGLOBAL}$		3.1		3.5		4.3	ns
$t_{LABCARRY}$		0.6		0.7		0.8	ns
$t_{LABCASC}$		0.3		0.3		0.4	ns

Table 37. External Reference Timing Parameters for EPF6024A Devices

Parameter	Speed Grade						Unit
	-1		-2		-3		
	Min	Max	Min	Max	Min	Max	
t_1		45.0		50.0		60.0	ns

EPF6024ATC144-2 Intel IC FPGA 117 I/O 144TQFP

Table 38. External Timing Parameters for EPF6024A Devices

Parameter	Speed Grade						Unit
	-1		-2		-3		
	Min	Max	Min	Max	Min	Max	
t_{INSU}	2.0 *(1)*		2.2 *(1)*		2.6 *(1)*		ns
t_{INH}	0.2 *(2)*		0.2 *(2)*		0.3 *(2)*		ns
t_{OUTCO}	2.0	7.4	2.0	8.2	2.0	9.9	ns

Notes:
(1) Setup times are longer when the *Increase Input Delay* option is turned on. The setup time values are shown with the *Increase Input Delay* option turned off.
(2) Hold time is zero when the *Increase Input Delay* option is turned on.

Power Consumption

The supply power (P) for FLEX 6000 devices can be calculated with the following equations:

$$P = P_{INT} + P_{IO}$$
$$P = (I_{CCSTANDBY} + I_{CCACTIVE}) \times V_{CC} + P_{IO}$$

Typical $I_{CCSTANDBY}$ values are shown as I_{CC0} in the "FLEX 6000 Device DC Operating Conditions" table on pages 31 and 33 of this data sheet. The $I_{CCACTIVE}$ value depends on the switching frequency and the application logic. This value is based on the amount of current that each LE typically consumes. The P_{IO} value, which depends on the device output load characteristics and switching frequency, can be calculated using the guidelines given in *Application Note 74 (Evaluating Power for Altera Devices)*.

The $I_{CCACTIVE}$ value can be calculated with the following equation:

$$I_{CCACTIVE} = K \times \mathbf{f_{MAX}} \times N \times \mathbf{tog_{LC}} \times \frac{\mu A}{MHz \times LE}$$

Where:

$\mathbf{f_{MAX}}$ = Maximum operating frequency in MHz
N = Total number of LEs used in a FLEX 6000 device
$\mathbf{tog_{LC}}$ = Average percentage of LEs toggling at each clock (typically 12.5%)
K = Constant, shown in Table 39

Table 39. K Constant Values

Device	K Value
EPF6010A	14
EPF6016	88
EPF6016A	14
EPF6024A	14

EPF6024ATC144-2 Intel IC FPGA 117 I/O 144TQFP

This calculation provides an I_{CC} estimate based on typical conditions with no output load. The actual I_{CC} should be verified during operation because this measurement is sensitive to the actual pattern in the device and the environmental operating conditions.

To better reflect actual designs, the power model (and the constant K in the power calculation equations shown above) for continuous interconnect FLEX devices assumes that LEs drive FastTrack Interconnect channels. In contrast, the power model of segmented FPGAs assumes that all LEs drive only one short interconnect segment. This assumption may lead to inaccurate results, compared to measured power consumption for an actual design in a segmented interconnect FPGA.

Figure 20 shows the relationship between the current and operating frequency for EPF6010A, EPF6016, EPF6016A, and EPF6024A devices.

EPF6024ATC144-2 Intel IC FPGA 117 I/O 144TQFP

Figure 20. $I_{CCACTIVE}$ vs. Operating Frequency

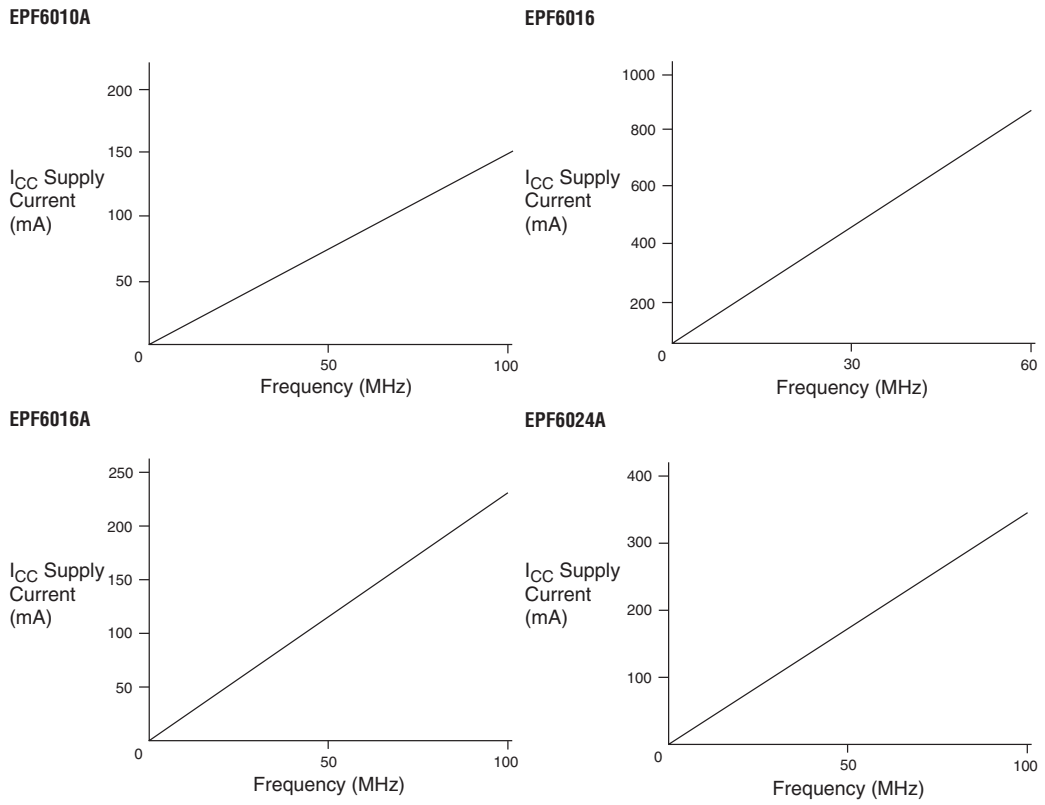

Device Configuration & Operation

The FLEX 6000 architecture supports several configuration schemes to load a design into the device(s) on the circuit board. This section summarizes the device operating modes and available device configuration schemes.

f See *Application Note 116 (Configuring APEX 20K, FLEX 10K & FLEX 6000 Devices)* for detailed information on configuring FLEX 6000 devices, including sample schematics, timing diagrams, configuration options, pins names, and timing parameters.

EPF6024ATC144-2 Intel IC FPGA 117 I/O 144TQFP

Operating Modes

The FLEX 6000 architecture uses SRAM configuration elements that require configuration data to be loaded every time the circuit powers up. This process of physically loading the SRAM data into a FLEX 6000 device is known as configuration. During initialization—a process that occurs immediately after configuration—the device resets registers, enables I/O pins, and begins to operate as a logic device. The I/O pins are tri-stated during power-up, and before and during configuration. The configuration and initialization processes of a device are referred to as *command mode*; normal device operation is called *user mode*.

SRAM configuration elements allow FLEX 6000 devices to be reconfigured in-circuit by loading new configuration data into the device. Real-time reconfiguration is performed by forcing the device into command mode with a device pin, loading different configuration data, reinitializing the device, and resuming user-mode operation. The entire reconfiguration process requires less than 100 ms and is used to dynamically reconfigure an entire system. Also, in-field system upgrades can be performed by distributing new configuration files.

Configuration Schemes

The configuration data for a FLEX 6000 device can be loaded with one of three configuration schemes, which is chosen on the basis of the target application. An EPC1 or EPC1441 configuration device or intelligent controller can be used to control the configuration of a FLEX 6000 device, allowing automatic configuration on system power-up.

Multiple FLEX 6000 devices can be configured in any of the three configuration schemes by connecting the configuration enable input (`nCE`) and configuration enable output (`nCEO`) pins on each device.

Table 40 shows the data sources for each configuration scheme.

Table 40. Configuration Schemes

Configuration Scheme	Data Source
Configuration device	EPC1 or EPC1441 configuration device
Passive serial (PS)	BitBlaster™, ByteBlasterMV™, or MasterBlaster™ download cables, or serial data source
Passive serial asynchronous (PSA)	BitBlaster, ByteBlasterMV, or MasterBlaster download cables, or serial data source

EPF6024ATC144-2 Intel IC FPGA 117 I/O 144TQFP

Device Pin-Outs

See the Altera web site (**http://www.altera.com**) or the *Altera Digital Library* for pin-out information.

EPF6024ATC144-2 Intel IC FPGA 117 I/O 144TQFP

101 Innovation Drive
San Jose, CA 95134
(408) 544-7000
http://www.altera.com
Applications Hotline:
(800) 800-EPLD
Customer Marketing:
(408) 544-7104
Literature Services:
(888) 3-ALTERA
lit_req@altera.com

Altera, BitBlaster, ByteBlasterMV, FastFlex, FastTrack, FineLine BGA, FLEX, MasterBlaster, MAX+PLUS II, MegaCore, MultiVolt, OptiFLEX, Quartus, SameFrame, and specific device designations are trademarks and/or service marks of Altera Corporation in the United States and other countries. Altera acknowledges the trademarks of other organizations for their respective products or services mentioned in this document, specifically: Verilog is a registered trademark of and Verilog-XL is a trademarks of Cadence Design Systems, Inc. DATA I/O is a registered trademark of Data I/O Corporation. HP is a registered trademark of Hewlett-Packard Company. Exemplar Logic is a registered trademark of Exemplar Logic, Inc. Pentium is a registered trademark of Intel Corporation. Mentor Graphics is a registered trademark of Mentor Graphics Corporation. OrCAD is a registered trademark of OrCAD Systems, Corporation. SPARCstation is a registered trademark of SPARC International, Inc. and is licensed exclusively to Sun Microsystems, Inc. Sun Workstation is a registered trademark of, and Sun is a registered trademark of Sun Microsystems, Inc. Synopsys is a registered trademark and DesignTime, HDL Compiler, and DesignWare are trademarks of Synopsys, Inc. VeriBest is a registered trademark of Viewlogic Systems, Inc. Viewlogic is a registered trademark of Viewlogic Systems, Inc. Altera products are protected under numerous U.S. and foreign patents and pending applications, maskwork rights, and copyrights. Altera warrants performance of its semiconductor products to current specifications in accordance with Altera's standard warranty, but reserves the right to make changes to any products and services at any time without notice. Altera assumes no responsibility or liability arising out of the application or use of any information, product, or service described herein except as expressly agreed to in writing by Altera Corporation. Altera customers are advised to obtain the latest version of device specifications before relying on any published information and before placing orders for products or services.

Copyright © 2001 Altera Corporation. All rights reserved.

I.S. EN ISO 9001

Printed on Recycled Paper.

FPGAMALL
Authorized Distributor

OUR CERTIFICATE

A long-term cooperative relationship can be built between global customers and us by providing excellent products

Business Type	Trading Company, Distributor/Wholesaler
Main Products	Electronic Integrated Circuit
Certifications	ISO9001
Total Annual Revenue	US$2.5 Million - US$5 Million
Country / Region	Hongkong, China
Total Employees	100 - 200 People
Year Established	2018
Main Markets	North America South Asia Western Europe

sales@fpgamall.com
+00852-56428680