https://www.fpgamall.com

THE DATASHEET OF FPGA

EPM7256AEQI208-7N Intel IC CPLD 256MC 7.5NS 208QFP

MAX 7000A

Programmable Logic Device

Includes MAX 7000AE

September 2003, ver. 4.5 Data Sheet

Features...

- High-performance 3.3-V EEPROM-based programmable logic devices (PLDs) built on second-generation Multiple Array MatriX (MAX®) architecture (see Table 1)
- 3.3-V in-system programmability (ISP) through the built-in IEEE Std. 1149.1 Joint Test Action Group (JTAG) interface with advanced pin-locking capability
  - MAX 7000AE device in-system programmability (ISP) circuitry compliant with IEEE Std. 1532
  - EPM7128A and EPM7256A device ISP circuitry compatible with IEEE Std. 1532
- Built-in boundary-scan test (BST) circuitry compliant with IEEE Std. 1149.1
- Supports JEDEC Jam Standard Test and Programming Language (STAPL) JESD-71
- Enhanced ISP features
  - Enhanced ISP algorithm for faster programming (excluding EPM7128A and EPM7256A devices)
  - ISP_Done bit to ensure complete programming (excluding EPM7128A and EPM7256A devices)
  - Pull-up resistor on I/O pins during in-system programming
- Pin-compatible with the popular 5.0-V MAX 7000S devices
- High-density PLDs ranging from 600 to 10,000 usable gates
- Extended temperature range

For information on in-system programmable 5.0-V MAX 7000 or 2.5-V MAX 7000B devices, see the *MAX 7000 Programmable Logic Device Family Data Sheet* or the *MAX 7000B Programmable Logic Device Family Data Sheet*.

EPM7256AEQI208-7N Intel IC CPLD 256MC 7.5NS 208QFP

Table 1. MAX 7000A Device Features

Feature	EPM7032AE	EPM7064AE	EPM7128AE	EPM7256AE	EPM7512AE
Usable gates	600	1,250	2,500	5,000	10,000
Macrocells	32	64	128	256	512
Logic array blocks	2	4	8	16	32
Maximum user I/O pins	36	68	100	164	212
t_{PD} (ns)	4.5	4.5	5.0	5.5	7.5
t_{SU} (ns)	2.9	2.8	3.3	3.9	5.6
t_{FSU} (ns)	2.5	2.5	2.5	2.5	3.0
t_{CO1} (ns)	3.0	3.1	3.4	3.5	4.7
f_{CNT} (MHz)	227.3	222.2	192.3	172.4	116.3

…and More Features

- 4.5-ns pin-to-pin logic delays with counter frequencies of up to 227.3 MHz
- MultiVolt™ I/O interface enables device core to run at 3.3 V, while I/O pins are compatible with 5.0-V, 3.3-V, and 2.5-V logic levels
- Pin counts ranging from 44 to 256 in a variety of thin quad flat pack (TQFP), plastic quad flat pack (PQFP), ball-grid array (BGA), space-saving FineLine BGA™, and plastic J-lead chip carrier (PLCC) packages
- Supports hot-socketing in MAX 7000AE devices
- Programmable interconnect array (PIA) continuous routing structure for fast, predictable performance
- PCI-compatible
- Bus-friendly architecture, including programmable slew-rate control
- Open-drain output option
- Programmable macrocell registers with individual clear, preset, clock, and clock enable controls
- Programmable power-up states for macrocell registers in MAX 7000AE devices
- Programmable power-saving mode for 50% or greater power reduction in each macrocell
- Configurable expander product-term distribution, allowing up to 32 product terms per macrocell
- Programmable security bit for protection of proprietary designs
- 6 to 10 pin- or logic-driven output enable signals
- Two global clock signals with optional inversion
- Enhanced interconnect resources for improved routability
- Fast input setup times provided by a dedicated path from I/O pin to macrocell registers
- Programmable output slew-rate control
- Programmable ground pins

EPM7256AEQI208-7N Intel IC CPLD 256MC 7.5NS 208QFP

- Software design support and automatic place-and-route provided by Altera's development systems for Windows-based PCs and Sun SPARCstation, and HP 9000 Series 700/800 workstations
- Additional design entry and simulation support provided by EDIF 2 0 0 and 3 0 0 netlist files, library of parameterized modules (LPM), Verilog HDL, VHDL, and other interfaces to popular EDA tools from manufacturers such as Cadence, Exemplar Logic, Mentor Graphics, OrCAD, Synopsys, Synplicity, and VeriBest
- Programming support with Altera's Master Programming Unit (MPU), MasterBlaster™ serial/universal serial bus (USB) communications cable, ByteBlasterMV™ parallel port download cable, and BitBlaster™ serial download cable, as well as programming hardware from third-party manufacturers and any Jam™ STAPL File (**.jam**), Jam Byte-Code File (**.jbc**), or Serial Vector Format File- (**.svf**) capable in-circuit tester

General Description

MAX 7000A (including MAX 7000AE) devices are high-density, high-performance devices based on Altera's second-generation MAX architecture. Fabricated with advanced CMOS technology, the EEPROM-based MAX 7000A devices operate with a 3.3-V supply voltage and provide 600 to 10,000 usable gates, ISP, pin-to-pin delays as fast as 4.5 ns, and counter speeds of up to 227.3 MHz. MAX 7000A devices in the -4, -5, -6, -7, and some -10 speed grades are compatible with the timing requirements for 33 MHz operation of the PCI Special Interest Group (PCI SIG) ***PCI Local Bus Specification, Revision 2.2***. See Table 2.

Table 2. MAX 7000A Speed Grades

Device	Speed Grade					
	-4	-5	-6	-7	-10	-12
EPM7032AE	✓			✓	✓	
EPM7064AE	✓			✓	✓	
EPM7128A			✓	✓	✓	✓
EPM7128AE		✓		✓	✓	
EPM7256A			✓	✓	✓	✓
EPM7256AE		✓		✓	✓	
EPM7512AE				✓	✓	✓

EPM7256AEQI208-7N Intel IC CPLD 256MC 7.5NS 208QFP

The MAX 7000A architecture supports 100% transistor-to-transistor logic (TTL) emulation and high-density integration of SSI, MSI, and LSI logic functions. It easily integrates multiple devices including PALs, GALs, and 22V10s devices. MAX 7000A devices are available in a wide range of packages, including PLCC, BGA, FineLine BGA, Ultra FineLine BGA, PQFP, and TQFP packages. See Table 3 and Table 4.

Table 3. MAX 7000A Maximum User I/O Pins *Note (1)*

Device	44-Pin PLCC	44-Pin TQFP	49-Pin Ultra FineLine BGA *(2)*	84-Pin PLCC	100-Pin TQFP	100-Pin FineLine BGA *(3)*
EPM7032AE	36	36				
EPM7064AE	36	36	41		68	68
EPM7128A				68	84	84
EPM7128AE				68	84	84
EPM7256A					84	
EPM7256AE					84	84
EPM7512AE						

Table 4. MAX 7000A Maximum User I/O Pins *Note (1)*

Device	144-Pin TQFP	169-Pin Ultra FineLine BGA *(2)*	208-Pin PQFP	256-Pin BGA	256-Pin FineLine BGA *(3)*
EPM7032AE					
EPM7064AE					
EPM7128A	100				100
EPM7128AE	100	100			100
EPM7256A	120		164		164
EPM7256AE	120		164		164
EPM7512AE	120		176	212	212

Notes to tables:

(1) When the IEEE Std. 1149.1 (JTAG) interface is used for in-system programming or boundary-scan testing, four I/O pins become JTAG pins.

(2) All Ultra FineLine BGA packages are footprint-compatible via the SameFrame™ feature. Therefore, designers can design a board to support a variety of devices, providing a flexible migration path across densities and pin counts. Device migration is fully supported by Altera development tools. See "SameFrame Pin-Outs" on page 15 for more details.

(3) All FineLine BGA packages are footprint-compatible via the SameFrame feature. Therefore, designers can design a board to support a variety of devices, providing a flexible migration path across densities and pin counts. Device migration is fully supported by Altera development tools. See "SameFrame Pin-Outs" on page 15 for more details.

EPM7256AEQI208-7N Intel IC CPLD 256MC 7.5NS 208QFP

MAX 7000A devices use CMOS EEPROM cells to implement logic functions. The user-configurable MAX 7000A architecture accommodates a variety of independent combinatorial and sequential logic functions. The devices can be reprogrammed for quick and efficient iterations during design development and debug cycles, and can be programmed and erased up to 100 times.

MAX 7000A devices contain from 32 to 512 macrocells that are combined into groups of 16 macrocells, called logic array blocks (LABs). Each macrocell has a programmable-AND/fixed-OR array and a configurable register with independently programmable clock, clock enable, clear, and preset functions. To build complex logic functions, each macrocell can be supplemented with both shareable expander product terms and high-speed parallel expander product terms, providing up to 32 product terms per macrocell.

MAX 7000A devices provide programmable speed/power optimization. Speed-critical portions of a design can run at high speed/full power, while the remaining portions run at reduced speed/low power. This speed/power optimization feature enables the designer to configure one or more macrocells to operate at 50% or lower power while adding only a nominal timing delay. MAX 7000A devices also provide an option that reduces the slew rate of the output buffers, minimizing noise transients when non-speed-critical signals are switching. The output drivers of all MAX 7000A devices can be set for 2.5 V or 3.3 V, and all input pins are 2.5-V, 3.3-V, and 5.0-V tolerant, allowing MAX 7000A devices to be used in mixed-voltage systems.

MAX 7000A devices are supported by Altera development systems, which are integrated packages that offer schematic, text—including VHDL, Verilog HDL, and the Altera Hardware Description Language (AHDL)—and waveform design entry, compilation and logic synthesis, simulation and timing analysis, and device programming. The software provides EDIF 2 0 0 and 3 0 0, LPM, VHDL, Verilog HDL, and other interfaces for additional design entry and simulation support from other industry-standard PC- and UNIX-workstation-based EDA tools. The software runs on Windows-based PCs, as well as Sun SPARCstation, and HP 9000 Series 700/800 workstations.

For more information on development tools, see the *MAX+PLUS II Programmable Logic Development System & Software Data Sheet* and the *Quartus Programmable Logic Development System & Software Data Sheet*.

EPM7256AEQI208-7N Intel IC CPLD 256MC 7.5NS 208QFP

Functional Description

The MAX 7000A architecture includes the following elements:

- Logic array blocks (LABs)
- Macrocells
- Expander product terms (shareable and parallel)
- Programmable interconnect array
- I/O control blocks

The MAX 7000A architecture includes four dedicated inputs that can be used as general-purpose inputs or as high-speed, global control signals (clock, clear, and two output enable signals) for each macrocell and I/O pin. Figure 1 shows the architecture of MAX 7000A devices.

EPM7256AEQI208-7N Intel IC CPLD 256MC 7.5NS 208QFP

Figure 1. MAX 7000A Device Block Diagram

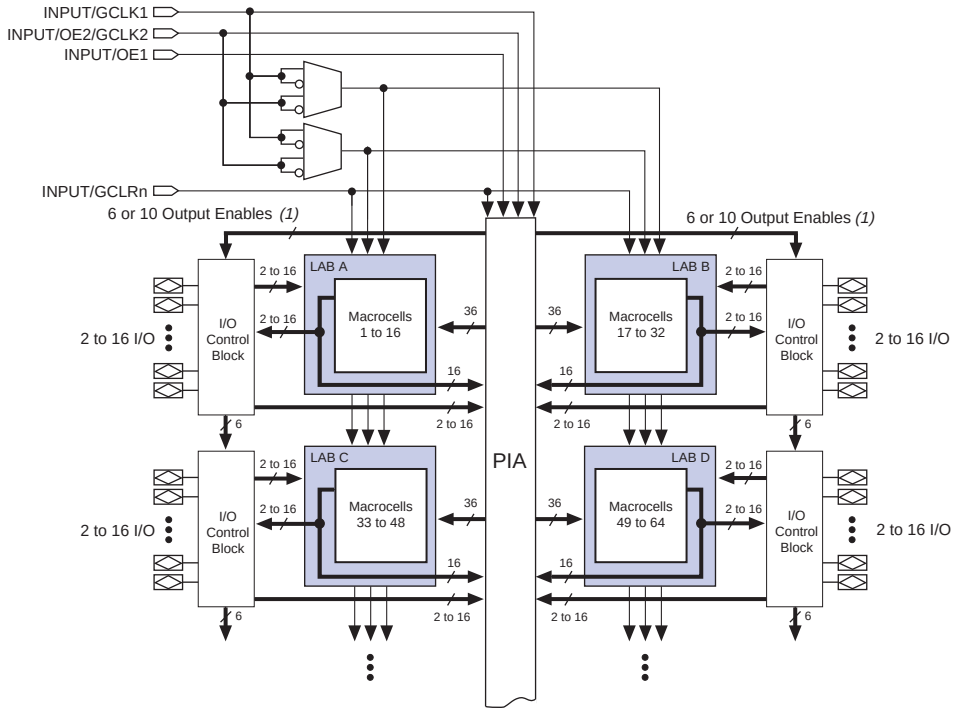

Note:

(1) EPM7032AE, EPM7064AE, EPM7128A, EPM7128AE, EPM7256A, and EPM7256AE devices have six output enables. EPM7512AE devices have 10 output enables.

Logic Array Blocks

The MAX 7000A device architecture is based on the linking of high-performance LABs. LABs consist of 16-macrocell arrays, as shown in Figure 1. Multiple LABs are linked together via the PIA, a global bus that is fed by all dedicated input pins, I/O pins, and macrocells.

Each LAB is fed by the following signals:

- 36 signals from the PIA that are used for general logic inputs
- Global controls that are used for secondary register functions
- Direct input paths from I/O pins to the registers that are used for fast setup times

EPM7256AEQI208-7N Intel IC CPLD 256MC 7.5NS 208QFP

Macrocells

MAX 7000A macrocells can be individually configured for either sequential or combinatorial logic operation. The macrocells consist of three functional blocks: the logic array, the product-term select matrix, and the programmable register. Figure 2 shows a MAX 7000A macrocell.

Figure 2. MAX 7000A Macrocell

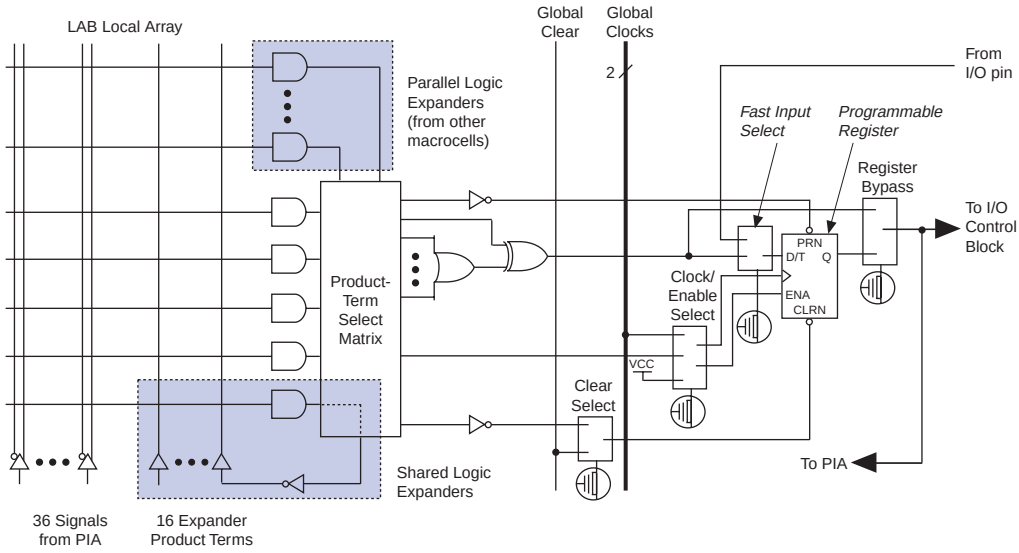

Combinatorial logic is implemented in the logic array, which provides five product terms per macrocell. The product-term select matrix allocates these product terms for use as either primary logic inputs (to the OR and XOR gates) to implement combinatorial functions, or as secondary inputs to the macrocell's register preset, clock, and clock enable control functions.

Two kinds of expander product terms ("expanders") are available to supplement macrocell logic resources:

- Shareable expanders, which are inverted product terms that are fed back into the logic array
- Parallel expanders, which are product terms borrowed from adjacent macrocells

The Altera development system automatically optimizes product-term allocation according to the logic requirements of the design.

EPM7256AEQI208-7N Intel IC CPLD 256MC 7.5NS 208QFP

For registered functions, each macrocell flipflop can be individually programmed to implement D, T, JK, or SR operation with programmable clock control. The flipflop can be bypassed for combinatorial operation. During design entry, the designer specifies the desired flipflop type; the Altera software then selects the most efficient flipflop operation for each registered function to optimize resource utilization.

Each programmable register can be clocked in three different modes:

- Global clock signal. This mode achieves the fastest clock-to-output performance.
- Global clock signal enabled by an active-high clock enable. A clock enable is generated by a product term. This mode provides an enable on each flipflop while still achieving the fast clock-to-output performance of the global clock.
- Array clock implemented with a product term. In this mode, the flipflop can be clocked by signals from buried macrocells or I/O pins.

Two global clock signals are available in MAX 7000A devices. As shown in Figure 1, these global clock signals can be the true or the complement of either of the global clock pins, `GCLK1` or `GCLK2`.

Each register also supports asynchronous preset and clear functions. As shown in Figure 2, the product-term select matrix allocates product terms to control these operations. Although the product-term-driven preset and clear from the register are active high, active-low control can be obtained by inverting the signal within the logic array. In addition, each register clear function can be individually driven by the active-low dedicated global clear pin (`GCLRn`). Upon power-up, each register in a MAX 7000AE device may be set to either a high or low state. This power-up state is specified at design entry. Upon power-up, each register in EPM7128A and EPM7256A devices are set to a low state.

All MAX 7000A I/O pins have a fast input path to a macrocell register. This dedicated path allows a signal to bypass the PIA and combinatorial logic and be clocked to an input D flipflop with an extremely fast (as low as 2.5 ns) input setup time.

EPM7256AEQI208-7N Intel IC CPLD 256MC 7.5NS 208QFP

Expander Product Terms

Although most logic functions can be implemented with the five product terms available in each macrocell, more complex logic functions require additional product terms. Another macrocell can be used to supply the required logic resources. However, the MAX 7000A architecture also offers both shareable and parallel expander product terms that provide additional product terms directly to any macrocell in the same LAB. These expanders help ensure that logic is synthesized with the fewest possible logic resources to obtain the fastest possible speed.

Shareable Expanders

Each LAB has 16 shareable expanders that can be viewed as a pool of uncommitted single product terms (one from each macrocell) with inverted outputs that feed back into the logic array. Each shareable expander can be used and shared by any or all macrocells in the LAB to build complex logic functions. A small delay (t_{SEXP}) is incurred when shareable expanders are used. Figure 3 shows how shareable expanders can feed multiple macrocells.

Figure 3. MAX 7000A Shareable Expanders

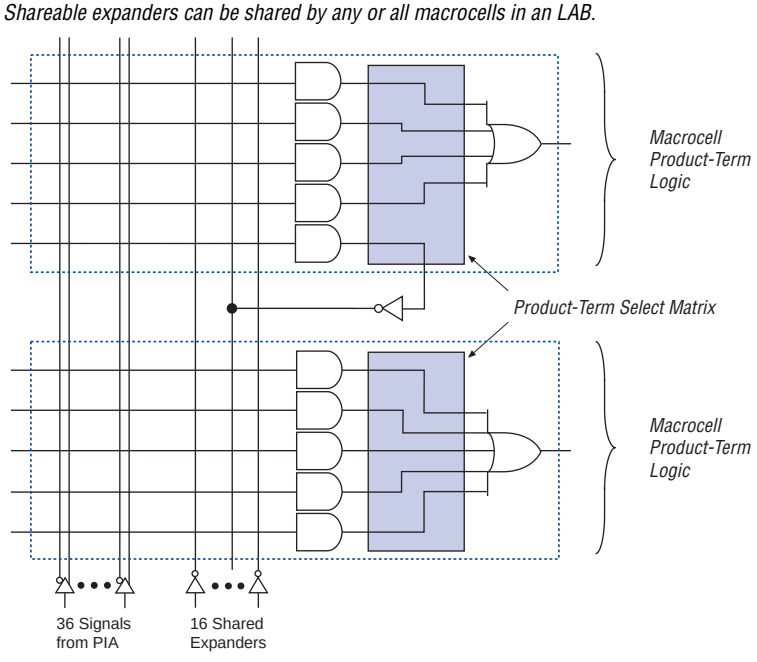

EPM7256AEQI208-7N Intel IC CPLD 256MC 7.5NS 208QFP

Parallel Expanders

Parallel expanders are unused product terms that can be allocated to a neighboring macrocell to implement fast, complex logic functions. Parallel expanders allow up to 20 product terms to directly feed the macrocell OR logic, with five product terms provided by the macrocell and 15 parallel expanders provided by neighboring macrocells in the LAB.

The compiler can allocate up to three sets of up to five parallel expanders to the macrocells that require additional product terms. Each set of five parallel expanders incurs a small, incremental timing delay (t_{PEXP}). For example, if a macrocell requires 14 product terms, the compiler uses the five dedicated product terms within the macrocell and allocates two sets of parallel expanders; the first set includes five product terms, and the second set includes four product terms, increasing the total delay by $2 \times t_{PEXP}$.

Two groups of eight macrocells within each LAB (e.g., macrocells 1 through 8 and 9 through 16) form two chains to lend or borrow parallel expanders. A macrocell borrows parallel expanders from lower-numbered macrocells. For example, macrocell 8 can borrow parallel expanders from macrocell 7, from macrocells 7 and 6, or from macrocells 7, 6, and 5. Within each group of eight, the lowest-numbered macrocell can only lend parallel expanders, and the highest-numbered macrocell can only borrow them. Figure 4 shows how parallel expanders can be borrowed from a neighboring macrocell.

EPM7256AEQI208-7N Intel IC CPLD 256MC 7.5NS 208QFP

Figure 4. MAX 7000A Parallel Expanders

Unused product terms in a macrocell can be allocated to a neighboring macrocell.

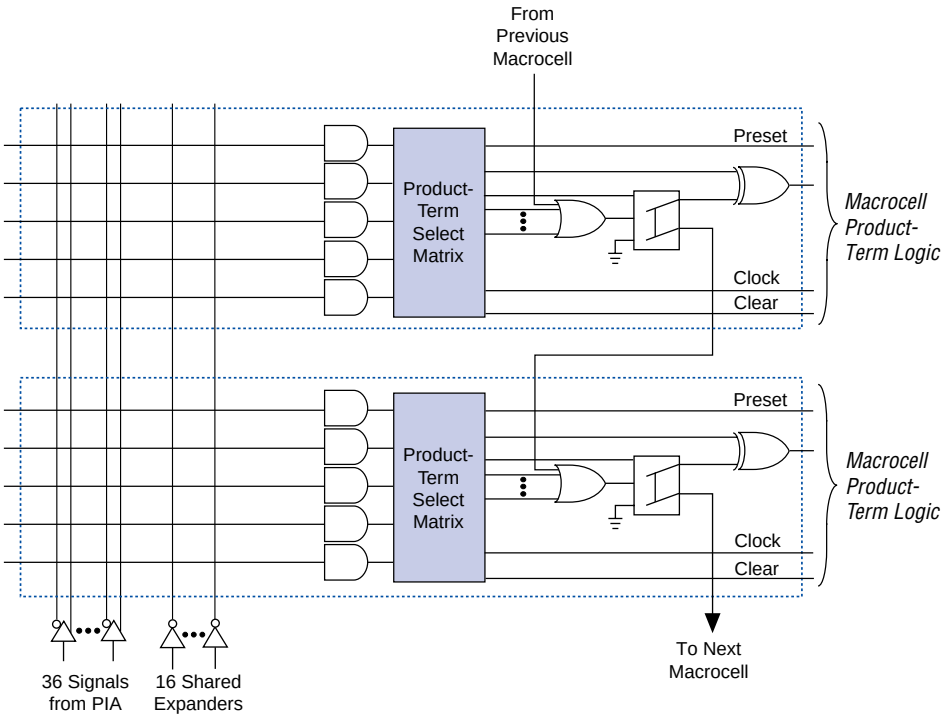

Programmable Interconnect Array

Logic is routed between LABs on the PIA. This global bus is a programmable path that connects any signal source to any destination on the device. All MAX 7000A dedicated inputs, I/O pins, and macrocell outputs feed the PIA, which makes the signals available throughout the entire device. Only the signals required by each LAB are actually routed from the PIA into the LAB. Figure 5 shows how the PIA signals are routed into the LAB. An EEPROM cell controls one input to a 2-input AND gate, which selects a PIA signal to drive into the LAB.

EPM7256AEQI208-7N Intel IC CPLD 256MC 7.5NS 208QFP

Figure 5. MAX 7000A PIA Routing

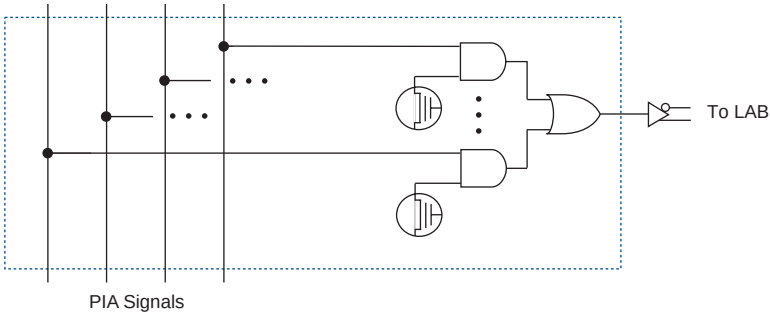

While the routing delays of channel-based routing schemes in masked or FPGAs are cumulative, variable, and path-dependent, the MAX 7000A PIA has a predictable delay. The PIA makes a design's timing performance easy to predict.

I/O Control Blocks

The I/O control block allows each I/O pin to be individually configured for input, output, or bidirectional operation. All I/O pins have a tri-state buffer that is individually controlled by one of the global output enable signals or directly connected to ground or V_{CC}. Figure 6 shows the I/O control block for MAX 7000A devices. The I/O control block has 6 or 10 global output enable signals that are driven by the true or complement of two output enable signals, a subset of the I/O pins, or a subset of the I/O macrocells.

EPM7256AEQI208-7N Intel IC CPLD 256MC 7.5NS 208QFP

Figure 6. I/O Control Block of MAX 7000A Devices

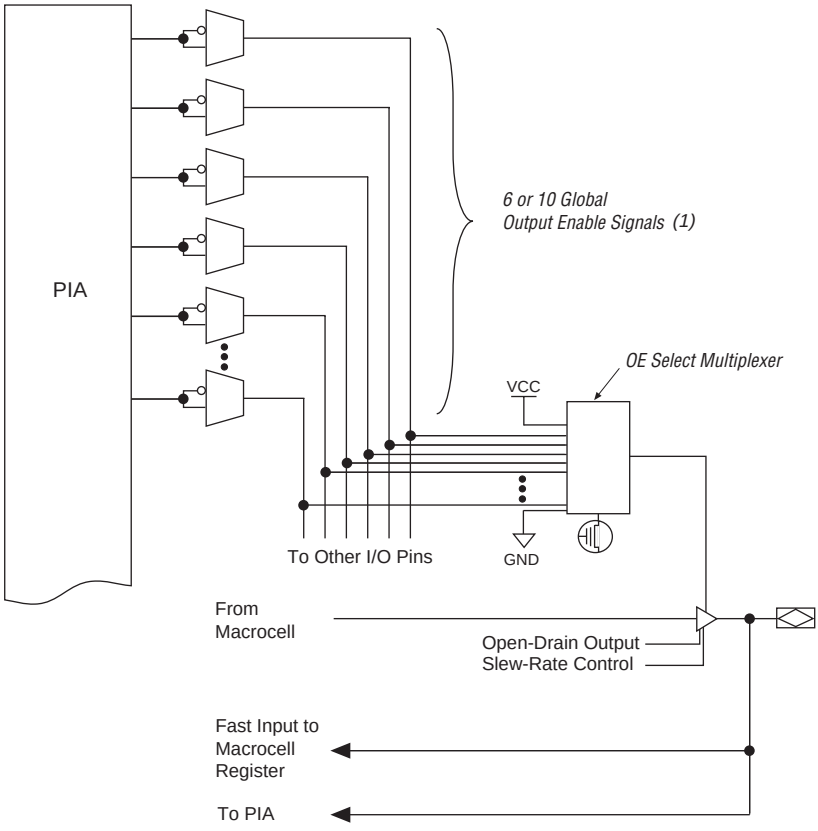

Note:

(1) EPM7032AE, EPM7064AE, EPM7128A, EPM7128AE, EPM7256A, and EPM7256AE devices have six output enable signals. EPM7512AE devices have 10 output enable signals.

When the tri-state buffer control is connected to ground, the output is tri-stated (high impedance) and the I/O pin can be used as a dedicated input. When the tri-state buffer control is connected to V_{CC}, the output is enabled.

The MAX 7000A architecture provides dual I/O feedback, in which macrocell and pin feedbacks are independent. When an I/O pin is configured as an input, the associated macrocell can be used for buried logic.

EPM7256AEQI208-7N Intel IC CPLD 256MC 7.5NS 208QFP

SameFrame Pin-Outs

MAX 7000A devices support the SameFrame pin-out feature for FineLine BGA packages. The SameFrame pin-out feature is the arrangement of balls on FineLine BGA packages such that the lower-ball-count packages form a subset of the higher-ball-count packages. SameFrame pin-outs provide the flexibility to migrate not only from device to device within the same package, but also from one package to another. A given printed circuit board (PCB) layout can support multiple device density/package combinations. For example, a single board layout can support a range of devices from an EPM7128AE device in a 100-pin FineLine BGA package to an EPM7512AE device in a 256-pin FineLine BGA package.

The Altera design software provides support to design PCBs with SameFrame pin-out devices. Devices can be defined for present and future use. The software generates pin-outs describing how to lay out a board to take advantage of this migration (see Figure 7).

Figure 7. SameFrame Pin-Out Example

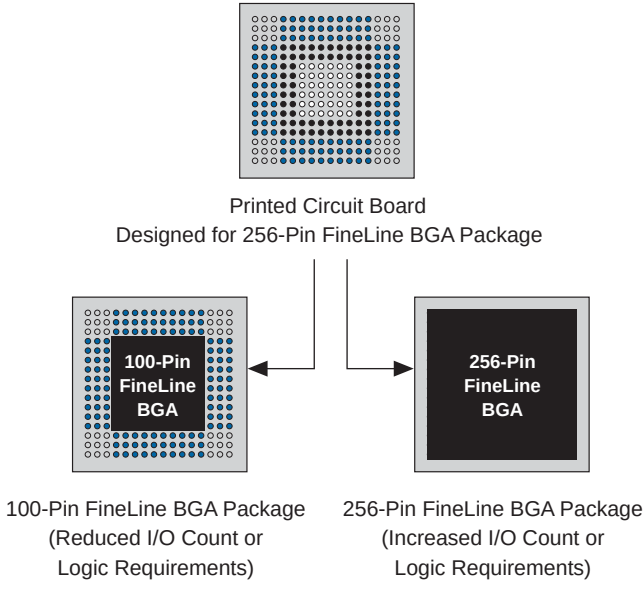

EPM7256AEQI208-7N Intel IC CPLD 256MC 7.5NS 208QFP

In-System Programmability

MAX 7000A devices can be programmed in-system via an industry-standard 4-pin IEEE Std. 1149.1 (JTAG) interface. ISP offers quick, efficient iterations during design development and debugging cycles. The MAX 7000A architecture internally generates the high programming voltages required to program EEPROM cells, allowing in-system programming with only a single 3.3-V power supply. During in-system programming, the I/O pins are tri-stated and weakly pulled-up to eliminate board conflicts. The pull-up value is nominally 50 kΩ.

MAX 7000AE devices have an enhanced ISP algorithm for faster programming. These devices also offer an ISP_Done bit that provides safe operation when in-system programming is interrupted. This ISP_Done bit, which is the last bit programmed, prevents all I/O pins from driving until the bit is programmed. This feature is only available in EPM7032AE, EPM7064AE, EPM7128AE, EPM7256AE, and EPM7512AE devices.

ISP simplifies the manufacturing flow by allowing devices to be mounted on a PCB with standard pick-and-place equipment before they are programmed. MAX 7000A devices can be programmed by downloading the information via in-circuit testers, embedded processors, the Altera MasterBlaster serial/USB communications cable, ByteBlasterMV parallel port download cable, and BitBlaster serial download cable. Programming the devices after they are placed on the board eliminates lead damage on high-pin-count packages (e.g., QFP packages) due to device handling. MAX 7000A devices can be reprogrammed after a system has already shipped to the field. For example, product upgrades can be performed in the field via software or modem.

In-system programming can be accomplished with either an adaptive or constant algorithm. An adaptive algorithm reads information from the unit and adapts subsequent programming steps to achieve the fastest possible programming time for that unit. A constant algorithm uses a pre-defined (non-adaptive) programming sequence that does not take advantage of adaptive algorithm programming time improvements. Some in-circuit testers cannot program using an adaptive algorithm. Therefore, a constant algorithm must be used. MAX 7000AE devices can be programmed with either an adaptive or constant (non-adaptive) algorithm. EPM7128A and EPM7256A device can only be programmed with an adaptive algorithm; users programming these two devices on platforms that cannot use an adaptive algorithm should use EPM7128AE and EPM7256AE devices.

The Jam Standard Test and Programming Language (STAPL), JEDEC standard JESD 71, can be used to program MAX 7000A devices with in-circuit testers, PCs, or embedded processors.

EPM7256AEQI208-7N Intel IC CPLD 256MC 7.5NS 208QFP

For more information on using the Jam STAPL language, see *Application Note 88 (Using the Jam Language for ISP & ICR via an Embedded Processor)* and *Application Note 122 (Using Jam STAPL for ISP & ICR via an Embedded Processor)*.

ISP circuitry in MAX 7000AE devices is compliant with the IEEE Std. 1532 specification. The IEEE Std. 1532 is a standard developed to allow concurrent ISP between multiple PLD vendors.

Programming Sequence

During in-system programming, instructions, addresses, and data are shifted into the MAX 7000A device through the `TDI` input pin. Data is shifted out through the `TDO` output pin and compared against the expected data.

Programming a pattern into the device requires the following six ISP stages. A stand-alone verification of a programmed pattern involves only stages 1, 2, 5, and 6.

1. *Enter ISP*. The enter ISP stage ensures that the I/O pins transition smoothly from user mode to ISP mode. The enter ISP stage requires 1 ms.

2. *Check ID*. Before any program or verify process, the silicon ID is checked. The time required to read this silicon ID is relatively small compared to the overall programming time.

3. *Bulk Erase*. Erasing the device in-system involves shifting in the instructions to erase the device and applying one erase pulse of 100 ms.

4. *Program*. Programming the device in-system involves shifting in the address and data and then applying the programming pulse to program the EEPROM cells. This process is repeated for each EEPROM address.

5. *Verify*. Verifying an Altera device in-system involves shifting in addresses, applying the read pulse to verify the EEPROM cells, and shifting out the data for comparison. This process is repeated for each EEPROM address.

6. *Exit ISP*. An exit ISP stage ensures that the I/O pins transition smoothly from ISP mode to user mode. The exit ISP stage requires 1 ms.

EPM7256AEQI208-7N Intel IC CPLD 256MC 7.5NS 208QFP

Programming Times

The time required to implement each of the six programming stages can be broken into the following two elements:

- A pulse time to erase, program, or read the EEPROM cells.
- A shifting time based on the test clock (TCK) frequency and the number of TCK cycles to shift instructions, address, and data into the device.

By combining the pulse and shift times for each of the programming stages, the program or verify time can be derived as a function of the TCK frequency, the number of devices, and specific target device(s). Because different ISP-capable devices have a different number of EEPROM cells, both the total fixed and total variable times are unique for a single device.

Programming a Single MAX 7000A Device

The time required to program a single MAX 7000A device in-system can be calculated from the following formula:

$$t_{PROG} = t_{PPULSE} + \frac{Cycle_{PTCK}}{f_{TCK}}$$

where: t_{PROG} = Programming time
t_{PPULSE} = Sum of the fixed times to erase, program, and verify the EEPROM cells
$Cycle_{PTCK}$ = Number of TCK cycles to program a device
f_{TCK} = TCK frequency

The ISP times for a stand-alone verification of a single MAX 7000A device can be calculated from the following formula:

$$t_{VER} = t_{VPULSE} + \frac{Cycle_{VTCK}}{f_{TCK}}$$

where: t_{VER} = Verify time
t_{VPULSE} = Sum of the fixed times to verify the EEPROM cells
$Cycle_{VTCK}$ = Number of TCK cycles to verify a device

EPM7256AEQI208-7N Intel IC CPLD 256MC 7.5NS 208QFP

The programming times described in Tables 5 through 7 are associated with the worst-case method using the enhanced ISP algorithm.

Table 5. MAX 7000A t_{PULSE} & $Cycle_{TCK}$ Values

Device	Programming		Stand-Alone Verification	
	t_{PPULSE} (s)	$Cycle_{PTCK}$	t_{VPULSE} (s)	$Cycle_{VTCK}$
EPM7032AE	2.00	55,000	0.002	18,000
EPM7064AE	2.00	105,000	0.002	35,000
EPM7128AE	2.00	205,000	0.002	68,000
EPM7256AE	2.00	447,000	0.002	149,000
EPM7512AE	2.00	890,000	0.002	297,000
EPM7128A *(1)*	5.11	832,000	0.03	528,000
EPM7256A *(1)*	6.43	1,603,000	0.03	1,024,000

Tables 6 and 7 show the in-system programming and stand alone verification times for several common test clock frequencies.

Table 6. MAX 7000A In-System Programming Times for Different Test Clock Frequencies

Device	f_{TCK}								Units
	10 MHz	5 MHz	2 MHz	1 MHz	500 kHz	200 kHz	100 kHz	50 kHz	
EPM7032AE	2.01	2.01	2.03	2.06	2.11	2.28	2.55	3.10	s
EPM7064AE	2.01	2.02	2.05	2.11	2.21	2.53	3.05	4.10	s
EPM7128AE	2.02	2.04	2.10	2.21	2.41	3.03	4.05	6.10	s
EPM7256AE	2.05	2.09	2.23	2.45	2.90	4.24	6.47	10.94	s
EPM7512AE	2.09	2.18	2.45	2.89	3.78	6.45	10.90	19.80	s
EPM7128A *(1)*	5.19	5.27	5.52	5.94	6.77	9.27	13.43	21.75	s
EPM7256A *(1)*	6.59	6.75	7.23	8.03	9.64	14.45	22.46	38.49	s

EPM7256AEQI208-7N Intel IC CPLD 256MC 7.5NS 208QFP

Table 7. MAX 7000A Stand-Alone Verification Times for Different Test Clock Frequencies

Device	f_{TCK}								Units
	10 MHz	5 MHz	2 MHz	1 MHz	500 kHz	200 kHz	100 kHz	50 kHz	
EPM7032AE	0.00	0.01	0.01	0.02	0.04	0.09	0.18	0.36	s
EPM7064AE	0.01	0.01	0.02	0.04	0.07	0.18	0.35	0.70	s
EPM7128AE	0.01	0.02	0.04	0.07	0.14	0.34	0.68	1.36	s
EPM7256AE	0.02	0.03	0.08	0.15	0.30	0.75	1.49	2.98	s
EPM7512AE	0.03	0.06	0.15	0.30	0.60	1.49	2.97	5.94	s
EPM7128A *(1)*	0.08	0.14	0.29	0.56	1.09	2.67	5.31	10.59	s
EPM7256A *(1)*	0.13	0.24	0.54	1.06	2.08	5.15	10.27	20.51	s

Note to tables:

(1) EPM7128A and EPM7256A devices can only be programmed with an adaptive algorithm; users programming these two devices on platforms that cannot use an adaptive algorithm should use EPM7128AE and EPM7256AE devices.

Programming with External Hardware

MAX 7000A devices can be programmed on Windows-based PCs with an Altera Logic Programmer card, the MPU, and the appropriate device adapter. The MPU performs continuity checks to ensure adequate electrical contact between the adapter and the device.

For more information, see the *Altera Programming Hardware Data Sheet*.

The Altera software can use text- or waveform-format test vectors created with the Altera Text Editor or Waveform Editor to test the programmed device. For added design verification, designers can perform functional testing to compare the functional device behavior with the results of simulation.

Data I/O, BP Microsystems, and other programming hardware manufacturers provide programming support for Altera devices.

For more information, see *Programming Hardware Manufacturers*.

IEEE Std. 1149.1 (JTAG) Boundary-Scan Support

MAX 7000A devices include the JTAG BST circuitry defined by IEEE Std. 1149.1. Table 8 describes the JTAG instructions supported by MAX 7000A devices. The pin-out tables, available from the Altera web site (**http://www.altera.com**), show the location of the JTAG control pins for each device. If the JTAG interface is not required, the JTAG pins are available as user I/O pins.

EPM7256AEQI208-7N Intel IC CPLD 256MC 7.5NS 208QFP

Table 8. MAX 7000A JTAG Instructions

JTAG Instruction	Description
SAMPLE/PRELOAD	Allows a snapshot of signals at the device pins to be captured and examined during normal device operation, and permits an initial data pattern output at the device pins
EXTEST	Allows the external circuitry and board-level interconnections to be tested by forcing a test pattern at the output pins and capturing test results at the input pins
BYPASS	Places the 1-bit bypass register between the TDI and TDO pins, which allows the BST data to pass synchronously through a selected device to adjacent devices during normal device operation
IDCODE	Selects the IDCODE register and places it between the TDI and TDO pins, allowing the IDCODE to be serially shifted out of TDO
USERCODE	Selects the 32-bit USERCODE register and places it between the TDI and TDO pins, allowing the USERCODE value to be shifted out of TDO. The USERCODE instruction is available for MAX 7000AE devices only
UESCODE	These instructions select the user electronic signature (UESCODE) and allow the UESCODE to be shifted out of TDO. UESCODE instructions are available for EPM7128A and EPM7256A devices only.
ISP Instructions	These instructions are used when programming MAX 7000A devices via the JTAG ports with the MasterBlaster, ByteBlasterMV, or BitBlaster download cable, or using a Jam STAPL File, JBC File, or SVF File via an embedded processor or test equipment.

EPM7256AEQI208-7N Intel IC CPLD 256MC 7.5NS 208QFP

The instruction register length of MAX 7000A devices is 10 bits. The user electronic signature (UES) register length in MAX 7000A devices is 16 bits. The MAX 7000AE USERCODE register length is 32 bits. Tables 9 and 10 show the boundary-scan register length and device IDCODE information for MAX 7000A devices.

Table 9. MAX 7000A Boundary-Scan Register Length

Device	Boundary-Scan Register Length
EPM7032AE	96
EPM7064AE	192
EPM7128A	288
EPM7128AE	288
EPM7256A	480
EPM7256AE	480
EPM7512AE	624

Table 10. 32-Bit MAX 7000A Device IDCODE *Note (1)*

Device	IDCODE (32 Bits)			
	Version (4 Bits)	Part Number (16 Bits)	Manufacturer's Identity (11 Bits)	1 (1 Bit) *(2)*
EPM7032AE	0001	0111 0000 0011 0010	00001101110	1
EPM7064AE	0001	0111 0000 0110 0100	00001101110	1
EPM7128A	0000	0111 0001 0010 1000	00001101110	1
EPM7128AE	0001	0111 0001 0010 1000	00001101110	1
EPM7256A	0000	0111 0010 0101 0110	00001101110	1
EPM7256AE	0001	0111 0010 0101 0110	00001101110	1
EPM7512AE	0001	0111 0101 0001 0010	00001101110	1

Notes:
(1) The most significant bit (MSB) is on the left.
(2) The least significant bit (LSB) for all JTAG IDCODEs is 1.

See *Application Note 39 (IEEE 1149.1 (JTAG) Boundary-Scan Testing in Altera Devices)* for more information on JTAG BST.

EPM7256AEQI208-7N Intel IC CPLD 256MC 7.5NS 208QFP

Figure 8 shows timing information for the JTAG signals.

Figure 8. MAX 7000A JTAG Waveforms

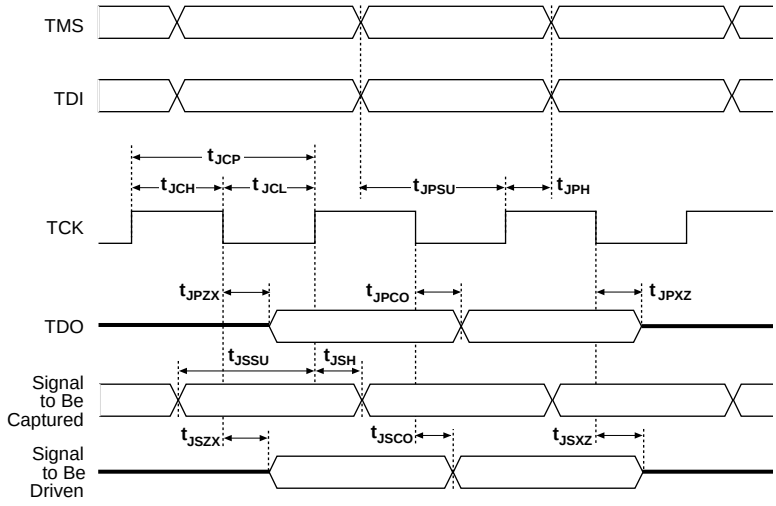

Table 11 shows the JTAG timing parameters and values for MAX 7000A devices.

Table 11. JTAG Timing Parameters & Values for MAX 7000A Devices Note (1)

Symbol	Parameter	Min	Max	Unit
t_{JCP}	TCK clock period	100		ns
t_{JCH}	TCK clock high time	50		ns
t_{JCL}	TCK clock low time	50		ns
t_{JPSU}	JTAG port setup time	20		ns
t_{JPH}	JTAG port hold time	45		ns
t_{JPCO}	JTAG port clock to output		25	ns
t_{JPZX}	JTAG port high impedance to valid output		25	ns
t_{JPXZ}	JTAG port valid output to high impedance		25	ns
t_{JSSU}	Capture register setup time	20		ns
t_{JSH}	Capture register hold time	45		ns
t_{JSCO}	Update register clock to output		25	ns
t_{JSZX}	Update register high impedance to valid output		25	ns
t_{JSXZ}	Update register valid output to high impedance		25	ns

Note:
(1) Timing parameters shown in this table apply for all specified VCCIO levels.

EPM7256AEQI208-7N Intel IC CPLD 256MC 7.5NS 208QFP

Programmable Speed/Power Control

MAX 7000A devices offer a power-saving mode that supports low-power operation across user-defined signal paths or the entire device. This feature allows total power dissipation to be reduced by 50% or more because most logic applications require only a small fraction of all gates to operate at maximum frequency.

The designer can program each individual macrocell in a MAX 7000A device for either high-speed (i.e., with the Turbo Bit™ option turned on) or low-power operation (i.e., with the Turbo Bit option turned off). As a result, speed-critical paths in the design can run at high speed, while the remaining paths can operate at reduced power. Macrocells that run at low power incur a nominal timing delay adder (t_{LPA}) for the t_{LAD}, t_{LAC}, t_{IC}, t_{EN}, t_{SEXP}, $\mathbf{t_{ACL}}$, and $\mathbf{t_{CPPW}}$ parameters.

Output Configuration

MAX 7000A device outputs can be programmed to meet a variety of system-level requirements.

MultiVolt I/O Interface

The MAX 7000A device architecture supports the MultiVolt I/O interface feature, which allows MAX 7000A devices to connect to systems with differing supply voltages. MAX 7000A devices in all packages can be set for 2.5-V, 3.3-V, or 5.0-V I/O pin operation. These devices have one set of `VCC` pins for internal operation and input buffers (`VCCINT`), and another set for I/O output drivers (`VCCIO`).

The `VCCIO` pins can be connected to either a 3.3-V or 2.5-V power supply, depending on the output requirements. When the `VCCIO` pins are connected to a 2.5-V power supply, the output levels are compatible with 2.5-V systems. When the `VCCIO` pins are connected to a 3.3-V power supply, the output high is at 3.3 V and is therefore compatible with 3.3-V or 5.0-V systems. Devices operating with V_{CCIO} levels lower than 3.0 V incur a slightly greater timing delay of t_{OD2} instead of t_{OD1}. Inputs can always be driven by 2.5-V, 3.3-V, or 5.0-V signals.

Table 12 describes the MAX 7000A MultiVolt I/O support.

Table 12. MAX 7000A MultiVolt I/O Support

V_{CCIO} Voltage	Input Signal (V)			Output Signal (V)		
	2.5	3.3	5.0	2.5	3.3	5.0
2.5	✓	✓	✓	✓		
3.3	✓	✓	✓		✓	✓

EPM7256AEQI208-7N Intel IC CPLD 256MC 7.5NS 208QFP

Open-Drain Output Option

MAX 7000A devices provide an optional open-drain (equivalent to open-collector) output for each I/O pin. This open-drain output enables the device to provide system-level control signals (e.g., interrupt and write enable signals) that can be asserted by any of several devices. This output can also provide an additional wired-OR plane.

Open-drain output pins on MAX 7000A devices (with a pull-up resistor to the 5.0-V supply) can drive 5.0-V CMOS input pins that require a high V_{IH}. When the open-drain pin is active, it will drive low. When the pin is inactive, the resistor will pull up the trace to 5.0 V to meet CMOS V_{OH} requirements. The open-drain pin will only drive low or tri-state; it will never drive high. The rise time is dependent on the value of the pull-up resistor and load impedance. The I_{OL} current specification should be considered when selecting a pull-up resistor.

Programmable Ground Pins

Each unused I/O pin on MAX 7000A devices may be used as an additional ground pin. In EPM7128A and EPM7256A devices, utilizing unused I/O pins as additional ground pins requires using the associated macrocell. In MAX 7000AE devices, this programmable ground feature does not require the use of the associated macrocell; therefore, the buried macrocell is still available for user logic.

Slew-Rate Control

The output buffer for each MAX 7000A I/O pin has an adjustable output slew rate that can be configured for low-noise or high-speed performance. A faster slew rate provides high-speed transitions for high-performance systems. However, these fast transitions may introduce noise transients into the system. A slow slew rate reduces system noise, but adds a nominal delay of 4 to 5 ns. When the configuration cell is turned off, the slew rate is set for low-noise performance. Each I/O pin has an individual EEPROM bit that controls the slew rate, allowing designers to specify the slew rate on a pin-by-pin basis. The slew rate control affects both the rising and falling edges of the output signal.

EPM7256AEQI208-7N Intel IC CPLD 256MC 7.5NS 208QFP

Power Sequencing & Hot-Socketing

Because MAX 7000A devices can be used in a mixed-voltage environment, they have been designed specifically to tolerate any possible power-up sequence. The V_{CCIO} and V_{CCINT} power planes can be powered in any order.

Signals can be driven into MAX 7000AE devices before and during power-up (and power-down) without damaging the device. Additionally, MAX 7000AE devices do not drive out during power-up. Once operating conditions are reached, MAX 7000AE devices operate as specified by the user.

MAX 7000AE device I/O pins will not source or sink more than 300 µA of DC current during power-up. All pins can be driven up to 5.75 V during hot-socketing, except the `OE1` and `GLCRn` pins. The `OE1` and `GLCRn` pins can be driven up to 3.6 V during hot-socketing. After V_{CCINT} and V_{CCIO} reach the recommended operating conditions, these two pins are 5.0-V tolerant.

EPM7128A and EPM7256A devices do not support hot-socketing and may drive out during power-up.

Design Security

All MAX 7000A devices contain a programmable security bit that controls access to the data programmed into the device. When this bit is programmed, a design implemented in the device cannot be copied or retrieved. This feature provides a high level of design security because programmed data within EEPROM cells is invisible. The security bit that controls this function, as well as all other programmed data, is reset only when the device is reprogrammed.

Generic Testing

MAX 7000A devices are fully tested. Complete testing of each programmable EEPROM bit and all internal logic elements ensures 100% programming yield. AC test measurements are taken under conditions equivalent to those shown in Figure 9. Test patterns can be used and then erased during early stages of the production flow.

EPM7256AEQI208-7N Intel IC CPLD 256MC 7.5NS 208QFP

Figure 9. MAX 7000A AC Test Conditions

Power supply transients can affect AC measurements. Simultaneous transitions of multiple outputs should be avoided for accurate measurement. Threshold tests must not be performed under AC conditions. Large-amplitude, fast-ground-current transients normally occur as the device outputs discharge the load capacitances. When these transients flow through the parasitic inductance between the device ground pin and the test system ground, significant reductions in observable noise immunity can result. Numbers in brackets are for 2.5-V outputs. Numbers without brackets are for 3.3-V outputs.

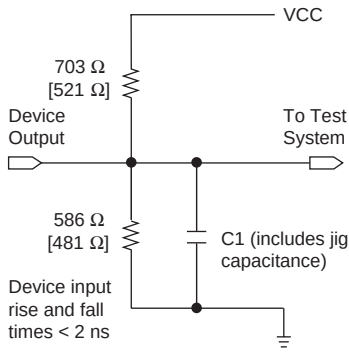

Operating Conditions

Tables 13 through 16 provide information on absolute maximum ratings, recommended operating conditions, operating conditions, and capacitance for MAX 7000A devices.

Table 13. MAX 7000A Device Absolute Maximum Ratings *Note (1)*

Symbol	Parameter	Conditions	Min	Max	Unit
V_{CC}	Supply voltage	With respect to ground *(2)*	–0.5	4.6	V
V_I	DC input voltage		–2.0	5.75	V
I_{OUT}	DC output current, per pin		–25	25	mA
T_{STG}	Storage temperature	No bias	–65	150	° C
T_A	Ambient temperature	Under bias	–65	135	° C
T_J	Junction temperature	BGA, FineLine BGA, PQFP, and TQFP packages, under bias		135	° C

EPM7256AEQI208-7N Intel IC CPLD 256MC 7.5NS 208QFP

Table 14. MAX 7000A Device Recommended Operating Conditions

Symbol	Parameter	Conditions	Min	Max	Unit
V_{CCINT}	Supply voltage for internal logic and input buffers	*(3)*, *(13)*	3.0	3.6	V
V_{CCIO}	Supply voltage for output drivers, 3.3-V operation	*(3)*	3.0	3.6	V
	Supply voltage for output drivers, 2.5-V operation	*(3)*	2.3	2.7	V
V_{CCISP}	Supply voltage during in-system programming		3.0	3.6	V
V_I	Input voltage	*(4)*	–0.5	5.75	V
V_O	Output voltage		0	V_{CCIO}	V
T_A	Ambient temperature	Commercial range	0	70	° C
		Industrial range *(5)*	–40	85	° C
T_J	Junction temperature	Commercial range	0	90	° C
		Industrial range *(5)*	–40	105	° C
		Extended range *(5)*	–40	130	° C
t_R	Input rise time			40	ns
t_F	Input fall time			40	ns

EPM7256AEQI208-7N Intel IC CPLD 256MC 7.5NS 208QFP

Table 15. MAX 7000A Device DC Operating Conditions *Note (6)*

Symbol	Parameter	Conditions	Min	Max	Unit
V_{IH}	High-level input voltage		1.7	5.75	V
V_{IL}	Low-level input voltage		–0.5	0.8	V
V_{OH}	3.3-V high-level TTL output voltage	I_{OH} = –8 mA DC, V_{CCIO} = 3.00 V *(7)*	2.4		V
	3.3-V high-level CMOS output voltage	I_{OH} = –0.1 mA DC, V_{CCIO} = 3.00 V *(7)*	V_{CCIO} – 0.2		V
	2.5-V high-level output voltage	I_{OH} = –100 µA DC, V_{CCIO} = 2.30 V *(7)*	2.1		V
		I_{OH} = –1 mA DC, V_{CCIO} = 2.30 V *(7)*	2.0		V
		I_{OH} = –2 mA DC, V_{CCIO} = 2.30 V *(7)*	1.7		V
V_{OL}	3.3-V low-level TTL output voltage	I_{OL} = 8 mA DC, V_{CCIO} = 3.00 V *(8)*		0.45	V
	3.3-V low-level CMOS output voltage	I_{OL} = 0.1 mA DC, V_{CCIO} = 3.00 V *(8)*		0.2	V
	2.5-V low-level output voltage	I_{OL} = 100 µA DC, V_{CCIO} = 2.30 V *(8)*		0.2	V
		I_{OL} = 1 mA DC, V_{CCIO} = 2.30 V *(8)*		0.4	V
		I_{OL} = 2 mA DC, V_{CCIO} = 2.30 V *(8)*		0.7	V
I_I	Input leakage current	V_I = –0.5 to 5.5 V *(9)*	–10	10	µA
I_{OZ}	Tri-state output off-state current	V_I = –0.5 to 5.5 V *(9)*	–10	10	µA
R_{ISP}	Value of I/O pin pull-up resistor during in-system programming or during power-up	V_{CCIO} = 3.0 to 3.6 V *(10)*	20	50	kΩ
		V_{CCIO} = 2.3 to 2.7 V *(10)*	30	80	kΩ
		V_{CCIO} = 2.3 to 3.6 V *(11)*	20	74	kΩ

Table 16. MAX 7000A Device Capacitance *Note (12)*

Symbol	Parameter	Conditions	Min	Max	Unit
C_{IN}	Input pin capacitance	V_{IN} = 0 V, f = 1.0 MHz		8	pF
$C_{I/O}$	I/O pin capacitance	V_{OUT} = 0 V, f = 1.0 MHz		8	pF

EPM7256AEQI208-7N Intel IC CPLD 256MC 7.5NS 208QFP

Notes to tables:

(1) See the *Operating Requirements for Altera Devices Data Sheet*.
(2) Minimum DC input voltage is –0.5 V. During transitions, the inputs may undershoot to –2.0 V for input currents less than 100 mA and periods shorter than 20 ns.
(3) For EPM7128A and EPM7256A devices only, V_{CC} must rise monotonically.
(4) In MAX 7000AE devices, all pins, including dedicated inputs, I/O pins, and JTAG pins, may be driven before V_{CCINT} and V_{CCIO} are powered.
(5) These devices support in-system programming for –40° to 100° C. For in-system programming support between –40° and 0° C, contact Altera Applications.
(6) These values are specified under the recommended operating conditions shown in Table 14 on page 28.
(7) The parameter is measured with 50% of the outputs each sourcing the specified current. The I_{OH} parameter refers to high-level TTL or CMOS output current.
(8) The parameter is measured with 50% of the outputs each sinking the specified current. The I_{OL} parameter refers to low-level TTL or CMOS output current.
(9) This value is specified for normal device operation. For MAX 7000AE devices, the maximum leakage current during power-up is ±300 µA. For EPM7128A and EPM7256A devices, leakage current during power-up is not specified.
(10) For EPM7128A and EPM7256A devices, this pull-up exists while a device is programmed in-system.
(11) For MAX 7000AE devices, this pull-up exists while devices are programmed in-system and in unprogrammed devices during power-up.
(12) Capacitance is measured at 25 °C and is sample-tested only. The `OE1` pin (high-voltage pin during programming) has a maximum capacitance of 20 pF.
(13) The POR time for MAX 7000AE devices (except MAX 7128A and MAX 7256A devices) does not exceed 100 µs. The sufficient V_{CCINT} voltage level for POR is 3.0 V. The device is fully initialized within the POR time after V_{CCINT} reaches the sufficient POR voltage level.

EPM7256AEQI208-7N Intel IC CPLD 256MC 7.5NS 208QFP

Figure 10 shows the typical output drive characteristics of MAX 7000A devices.

Figure 10. Output Drive Characteristics of MAX 7000A Devices

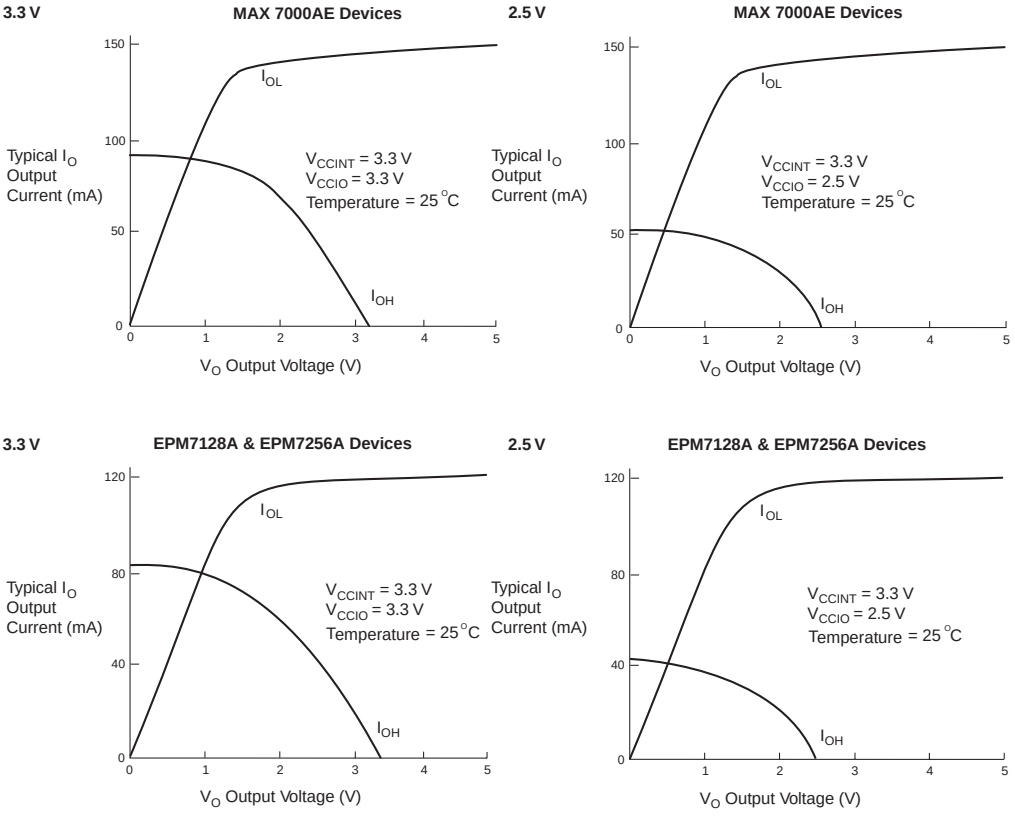

Timing Model

MAX 7000A device timing can be analyzed with the Altera software, a variety of popular industry-standard EDA simulators and timing analyzers, or with the timing model shown in Figure 11. MAX 7000A devices have predictable internal delays that enable the designer to determine the worst-case timing of any design. The software provides timing simulation, point-to-point delay prediction, and detailed timing analysis for device-wide performance evaluation.

EPM7256AEQI208-7N Intel IC CPLD 256MC 7.5NS 208QFP

Figure 11. MAX 7000A Timing Model

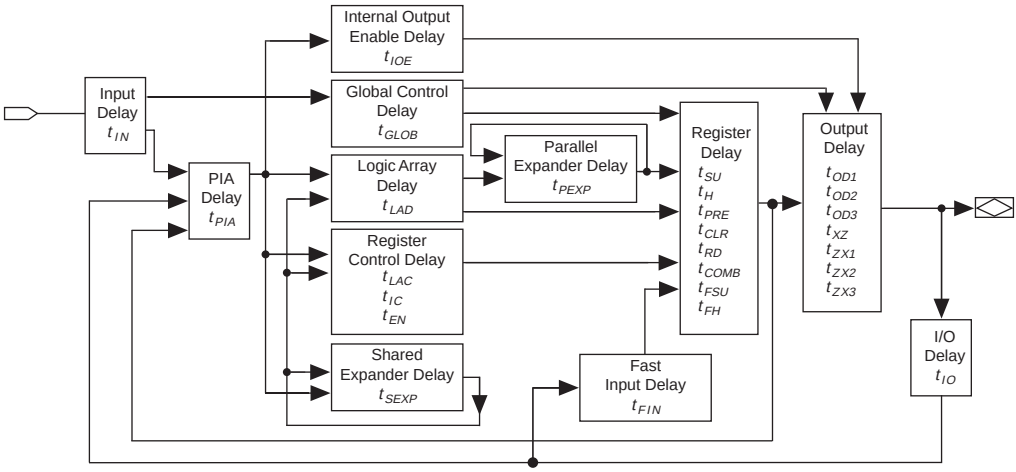

The timing characteristics of any signal path can be derived from the timing model and parameters of a particular device. External timing parameters, which represent pin-to-pin timing delays, can be calculated as the sum of internal parameters. Figure 12 shows the timing relationship between internal and external delay parameters.

See *Application Note 94 (Understanding MAX 7000 Timing)* for more information.

EPM7256AEQI208-7N Intel IC CPLD 256MC 7.5NS 208QFP

Figure 12. MAX 7000A Switching Waveforms

t_R & t_F < 2 ns. Inputs are driven at 3 V for a logic high and 0 V for a logic low. All timing characteristics are measured at 1.5 V.

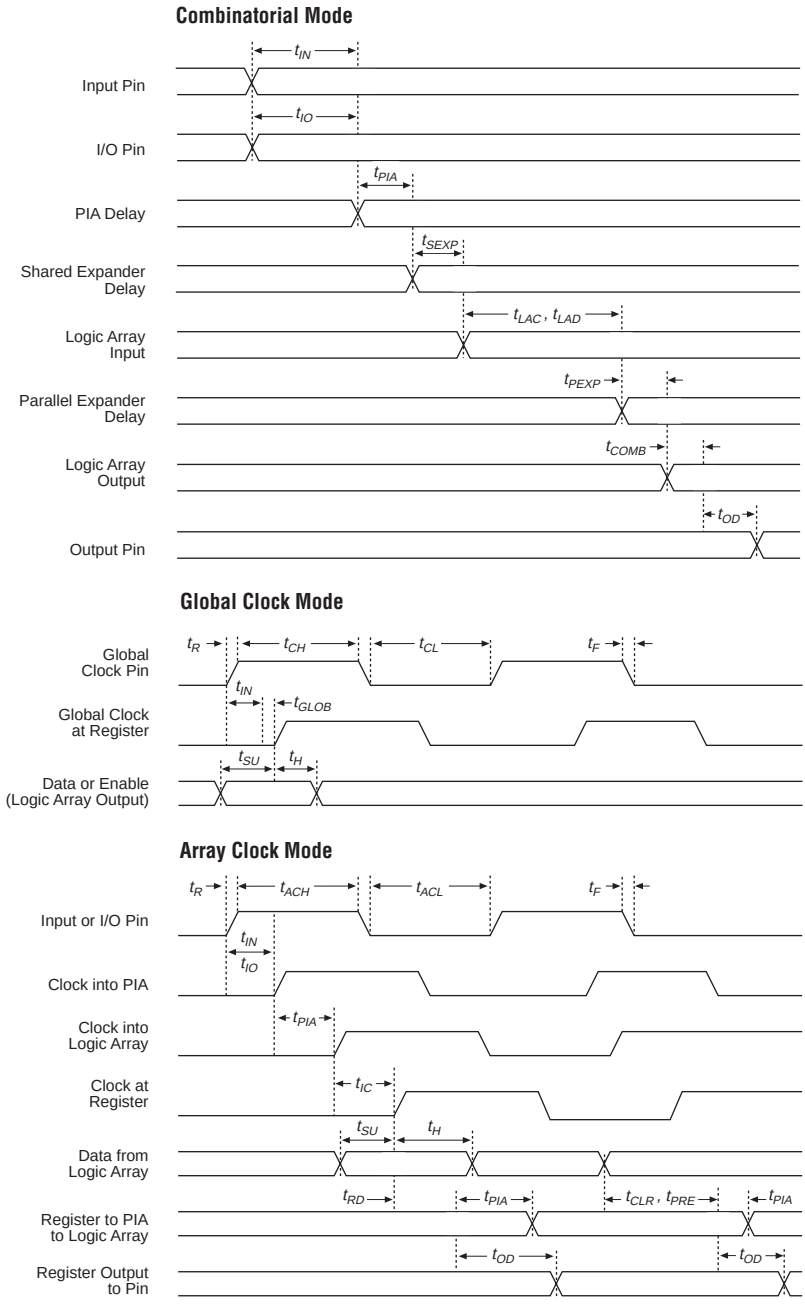

EPM7256AEQI208-7N Intel IC CPLD 256MC 7.5NS 208QFP

Tables 17 through 30 show EPM7032AE, EPM7064AE, EPM7128AE, EPM7256AE, EPM7512AE, EPM7128A, and EPM7256A timing information.

Table 17. EPM7032AE External Timing Parameters *Note (1)*

Symbol	Parameter	Conditions	Speed Grade						Unit
			-4		-7		-10		
			Min	Max	Min	Max	Min	Max	
t_{PD1}	Input to non-registered output	C1 = 35 pF *(2)*		4.5		7.5		10	ns
t_{PD2}	I/O input to non-registered output	C1 = 35 pF *(2)*		4.5		7.5		10	ns
t_{SU}	Global clock setup time	*(2)*	2.9		4.7		6.3		ns
t_{H}	Global clock hold time	*(2)*	0.0		0.0		0.0		ns
t_{FSU}	Global clock setup time of fast input		2.5		3.0		3.0		ns
t_{FH}	Global clock hold time of fast input		0.0		0.0		0.0		ns
t_{CO1}	Global clock to output delay	C1 = 35 pF	1.0	3.0	1.0	5.0	1.0	6.7	ns
t_{CH}	Global clock high time		2.0		3.0		4.0		ns
t_{CL}	Global clock low time		2.0		3.0		4.0		ns
t_{ASU}	Array clock setup time	*(2)*	1.6		2.5		3.6		ns
t_{AH}	Array clock hold time	*(2)*	0.3		0.5		0.5		ns
t_{ACO1}	Array clock to output delay	C1 = 35 pF *(2)*	1.0	4.3	1.0	7.2	1.0	9.4	ns
t_{ACH}	Array clock high time		2.0		3.0		4.0		ns
t_{ACL}	Array clock low time		2.0		3.0		4.0		ns
t_{CPPW}	Minimum pulse width for clear and preset	*(3)*	2.0		3.0		4.0		ns
t_{CNT}	Minimum global clock period	*(2)*		4.4		7.2		9.7	ns
f_{CNT}	Maximum internal global clock frequency	*(2)*, *(4)*	227.3		138.9		103.1		MHz
t_{ACNT}	Minimum array clock period	*(2)*		4.4		7.2		9.7	ns
f_{ACNT}	Maximum internal array clock frequency	*(2)*, *(4)*	227.3		138.9		103.1		MHz

EPM7256AEQI208-7N Intel IC CPLD 256MC 7.5NS 208QFP

Table 18. EPM7032AE Internal Timing Parameters (Part 1 of 2) *Note (1)*

Symbol	Parameter	Conditions	Speed Grade						Unit
			-4		-7		-10		
			Min	Max	Min	Max	Min	Max	
t_{IN}	Input pad and buffer delay			0.7		1.2		1.5	ns
t_{IO}	I/O input pad and buffer delay			0.7		1.2		1.5	ns
t_{FIN}	Fast input delay			2.3		2.8		3.4	ns
t_{SEXP}	Shared expander delay			1.9		3.1		4.0	ns
t_{PEXP}	Parallel expander delay			0.5		0.8		1.0	ns
t_{LAD}	Logic array delay			1.5		2.5		3.3	ns
t_{LAC}	Logic control array delay			0.6		1.0		1.2	ns
t_{IOE}	Internal output enable delay			0.0		0.0		0.0	ns
t_{OD1}	Output buffer and pad delay, slow slew rate = off V_{CCIO} = 3.3 V	C1 = 35 pF		0.8		1.3		1.8	ns
t_{OD2}	Output buffer and pad delay, slow slew rate = off V_{CCIO} = 2.5 V	C1 = 35 pF *(5)*		1.3		1.8		2.3	ns
t_{OD3}	Output buffer and pad delay, slow slew rate = on V_{CCIO} = 2.5 V or 3.3 V	C1 = 35 pF		5.8		6.3		6.8	ns
t_{ZX1}	Output buffer enable delay, slow slew rate = off V_{CCIO} = 3.3 V	C1 = 35 pF		4.0		4.0		5.0	ns
t_{ZX2}	Output buffer enable delay, slow slew rate = off V_{CCIO} = 2.5 V	C1 = 35 pF *(5)*		4.5		4.5		5.5	ns
t_{ZX3}	Output buffer enable delay, slow slew rate = on V_{CCIO} = 3.3 V	C1 = 35 pF		9.0		9.0		10.0	ns
t_{XZ}	Output buffer disable delay	C1 = 5 pF		4.0		4.0		5.0	ns
t_{SU}	Register setup time		1.3		2.0		2.8		ns
t_{H}	Register hold time		0.6		1.0		1.3		ns
t_{FSU}	Register setup time of fast input		1.0		1.5		1.5		ns
t_{FH}	Register hold time of fast input		1.5		1.5		1.5		ns
t_{RD}	Register delay			0.7		1.2		1.5	ns
t_{COMB}	Combinatorial delay			0.6		1.0		1.3	ns

EPM7256AEQI208-7N Intel IC CPLD 256MC 7.5NS 208QFP

Table 18. EPM7032AE Internal Timing Parameters (Part 2 of 2) *Note (1)*

Symbol	Parameter	Conditions	Speed Grade						Unit
			-4		-7		-10		
			Min	Max	Min	Max	Min	Max	
t_{IC}	Array clock delay			1.2		2.0		2.5	ns
t_{EN}	Register enable time			0.6		1.0		1.2	ns
t_{GLOB}	Global control delay			0.8		1.3		1.9	ns
t_{PRE}	Register preset time			1.2		1.9		2.6	ns
t_{CLR}	Register clear time			1.2		1.9		2.6	ns
t_{PIA}	PIA delay	*(2)*		0.9		1.5		2.1	ns
t_{LPA}	Low-power adder	*(6)*		2.5		4.0		5.0	ns

EPM7256AEQI208-7N Intel IC CPLD 256MC 7.5NS 208QFP

Table 19. EPM7064AE External Timing Parameters *Note (1)*

Symbol	Parameter	Conditions	Speed Grade						Unit
			-4		-7		-10		
			Min	Max	Min	Max	Min	Max	
t_{PD1}	Input to non-registered output	C1 = 35 pF *(2)*		4.5		7.5		10.0	ns
t_{PD2}	I/O input to non-registered output	C1 = 35 pF *(2)*		4.5		7.5		10.0	ns
t_{SU}	Global clock setup time	*(2)*	2.8		4.7		6.2		ns
t_{H}	Global clock hold time	*(2)*	0.0		0.0		0.0		ns
t_{FSU}	Global clock setup time of fast input		2.5		3.0		3.0		ns
t_{FH}	Global clock hold time of fast input		0.0		0.0		0.0		ns
t_{CO1}	Global clock to output delay	C1 = 35 pF	1.0	3.1	1.0	5.1	1.0	7.0	ns
t_{CH}	Global clock high time		2.0		3.0		4.0		ns
t_{CL}	Global clock low time		2.0		3.0		4.0		ns
t_{ASU}	Array clock setup time	*(2)*	1.6		2.6		3.6		ns
t_{AH}	Array clock hold time	*(2)*	0.3		0.4		0.6		ns
t_{ACO1}	Array clock to output delay	C1 = 35 pF *(2)*	1.0	4.3	1.0	7.2	1.0	9.6	ns
t_{ACH}	Array clock high time		2.0		3.0		4.0		ns
t_{ACL}	Array clock low time		2.0		3.0		4.0		ns
t_{CPPW}	Minimum pulse width for clear and preset	*(3)*	2.0		3.0		4.0		ns
t_{CNT}	Minimum global clock period	*(2)*		4.5		7.4		10.0	ns
f_{CNT}	Maximum internal global clock frequency	*(2)*, *(4)*	222.2		135.1		100.0		MHz
t_{ACNT}	Minimum array clock period	*(2)*		4.5		7.4		10.0	ns
f_{ACNT}	Maximum internal array clock frequency	*(2)*, *(4)*	222.2		135.1		100.0		MHz

EPM7256AEQI208-7N Intel IC CPLD 256MC 7.5NS 208QFP

Table 20. EPM7064AE Internal Timing Parameters (Part 1 of 2) *Note (1)*

Symbol	Parameter	Conditions	Speed Grade						Unit
			-4		-7		-10		
			Min	Max	Min	Max	Min	Max	
t_{IN}	Input pad and buffer delay			0.6		1.1		1.4	ns
t_{IO}	I/O input pad and buffer delay			0.6		1.1		1.4	ns
t_{FIN}	Fast input delay			2.5		3.0		3.7	ns
t_{SEXP}	Shared expander delay			1.8		3.0		3.9	ns
t_{PEXP}	Parallel expander delay			0.4		0.7		0.9	ns
t_{LAD}	Logic array delay			1.5		2.5		3.2	ns
t_{LAC}	Logic control array delay			0.6		1.0		1.2	ns
t_{IOE}	Internal output enable delay			0.0		0.0		0.0	ns
t_{OD1}	Output buffer and pad delay, slow slew rate = off V_{CCIO} = 3.3 V	C1 = 35 pF		0.8		1.3		1.8	ns
t_{OD2}	Output buffer and pad delay, slow slew rate = off V_{CCIO} = 2.5 V	C1 = 35 pF *(5)*		1.3		1.8		2.3	ns
t_{OD3}	Output buffer and pad delay, slow slew rate = on V_{CCIO} = 2.5 V or 3.3 V	C1 = 35 pF		5.8		6.3		6.8	ns
t_{ZX1}	Output buffer enable delay, slow slew rate = off V_{CCIO} = 3.3 V	C1 = 35 pF		4.0		4.0		5.0	ns
t_{ZX2}	Output buffer enable delay, slow slew rate = off V_{CCIO} = 2.5 V	C1 = 35 pF *(5)*		4.5		4.5		5.5	ns
t_{ZX3}	Output buffer enable delay, slow slew rate = on V_{CCIO} = 3.3 V	C1 = 35 pF		9.0		9.0		10.0	ns
t_{XZ}	Output buffer disable delay	C1 = 5 pF		4.0		4.0		5.0	ns
t_{SU}	Register setup time		1.3		2.0		2.9		ns
t_{H}	Register hold time		0.6		1.0		1.3		ns
t_{FSU}	Register setup time of fast input		1.0		1.5		1.5		ns
t_{FH}	Register hold time of fast input		1.5		1.5		1.5		ns
t_{RD}	Register delay			0.7		1.2		1.6	ns
t_{COMB}	Combinatorial delay			0.6		0.9		1.3	ns
t_{IC}	Array clock delay			1.2		1.9		2.5	ns

EPM7256AEQI208-7N Intel IC CPLD 256MC 7.5NS 208QFP

Table 20. EPM7064AE Internal Timing Parameters (Part 2 of 2) *Note (1)*

Symbol	Parameter	Conditions	Speed Grade						Unit
			-4		-7		-10		
			Min	Max	Min	Max	Min	Max	
t_{EN}	Register enable time			0.6		1.0		1.2	ns
t_{GLOB}	Global control delay			1.0		1.5		2.2	ns
t_{PRE}	Register preset time			1.3		2.1		2.9	ns
t_{CLR}	Register clear time			1.3		2.1		2.9	ns
t_{PIA}	PIA delay	*(2)*		1.0		1.7		2.3	ns
t_{LPA}	Low-power adder	*(6)*		3.5		4.0		5.0	ns

EPM7256AEQI208-7N Intel IC CPLD 256MC 7.5NS 208QFP

Table 21. EPM7128AE External Timing Parameters *Note (1)*

Symbol	Parameter	Conditions	Speed Grade						Unit
			-5		-7		-10		
			Min	Max	Min	Max	Min	Max	
t_{PD1}	Input to non-registered output	C1 = 35 pF *(2)*		5.0		7.5		10	ns
t_{PD2}	I/O input to non-registered output	C1 = 35 pF *(2)*		5.0		7.5		10	ns
t_{SU}	Global clock setup time	*(2)*	3.3		4.9		6.6		ns
t_{H}	Global clock hold time	*(2)*	0.0		0.0		0.0		ns
t_{FSU}	Global clock setup time of fast input		2.5		3.0		3.0		ns
t_{FH}	Global clock hold time of fast input		0.0		0.0		0.0		ns
t_{CO1}	Global clock to output delay	C1 = 35 pF	1.0	3.4	1.0	5.0	1.0	6.6	ns
t_{CH}	Global clock high time		2.0		3.0		4.0		ns
t_{CL}	Global clock low time		2.0		3.0		4.0		ns
t_{ASU}	Array clock setup time	*(2)*	1.8		2.8		3.8		ns
t_{AH}	Array clock hold time	*(2)*	0.2		0.3		0.4		ns
t_{ACO1}	Array clock to output delay	C1 = 35 pF *(2)*	1.0	4.9	1.0	7.1	1.0	9.4	ns
t_{ACH}	Array clock high time		2.0		3.0		4.0		ns
t_{ACL}	Array clock low time		2.0		3.0		4.0		ns
t_{CPPW}	Minimum pulse width for clear and preset	*(3)*	2.0		3.0		4.0		ns
t_{CNT}	Minimum global clock period	*(2)*		5.2		7.7		10.2	ns
f_{CNT}	Maximum internal global clock frequency	*(2)*, *(4)*	192.3		129.9		98.0		MHz
t_{ACNT}	Minimum array clock period	*(2)*		5.2		7.7		10.2	ns
f_{ACNT}	Maximum internal array clock frequency	*(2)*, *(4)*	192.3		129.9		98.0		MHz

EPM7256AEQI208-7N Intel IC CPLD 256MC 7.5NS 208QFP

Table 22. EPM7128AE Internal Timing Parameters (Part 1 of 2) *Note (1)*

Symbol	Parameter	Conditions	Speed Grade						Unit
			-5		-7		-10		
			Min	Max	Min	Max	Min	Max	
t_{IN}	Input pad and buffer delay			0.7		1.0		1.4	ns
t_{IO}	I/O input pad and buffer delay			0.7		1.0		1.4	ns
t_{FIN}	Fast input delay			2.5		3.0		3.4	ns
t_{SEXP}	Shared expander delay			2.0		2.9		3.8	ns
t_{PEXP}	Parallel expander delay			0.4		0.7		0.9	ns
t_{LAD}	Logic array delay			1.6		2.4		3.1	ns
t_{LAC}	Logic control array delay			0.7		1.0		1.3	ns
t_{IOE}	Internal output enable delay			0.0		0.0		0.0	ns
t_{OD1}	Output buffer and pad delay, slow slew rate = off V_{CCIO} = 3.3 V	C1 = 35 pF		0.8		1.2		1.6	ns
t_{OD2}	Output buffer and pad delay, slow slew rate = off V_{CCIO} = 2.5 V	C1 = 35 pF *(5)*		1.3		1.7		2.1	ns
t_{OD3}	Output buffer and pad delay, slow slew rate = on V_{CCIO} = 2.5 V or 3.3 V	C1 = 35 pF		5.8		6.2		6.6	ns
t_{ZX1}	Output buffer enable delay, slow slew rate = off V_{CCIO} = 3.3 V	C1 = 35 pF		4.0		4.0		5.0	ns
t_{ZX2}	Output buffer enable delay, slow slew rate = off V_{CCIO} = 2.5 V	C1 = 35 pF *(5)*		4.5		4.5		5.5	ns
t_{ZX3}	Output buffer enable delay, slow slew rate = on V_{CCIO} = 3.3 V	C1 = 35 pF		9.0		9.0		10.0	ns
t_{XZ}	Output buffer disable delay	C1 = 5 pF		4.0		4.0		5.0	ns
t_{SU}	Register setup time		1.4		2.1		2.9		ns
t_{H}	Register hold time		0.6		1.0		1.3		ns
t_{FSU}	Register setup time of fast input		1.1		1.6		1.6		ns
t_{FH}	Register hold time of fast input		1.4		1.4		1.4		ns
t_{RD}	Register delay			0.8		1.2		1.6	ns
t_{COMB}	Combinatorial delay			0.5		0.9		1.3	ns
t_{IC}	Array clock delay			1.2		1.7		2.2	ns

EPM7256AEQI208-7N Intel IC CPLD 256MC 7.5NS 208QFP

Table 22. EPM7128AE Internal Timing Parameters (Part 2 of 2) *Note (1)*

Symbol	Parameter	Conditions	Speed Grade						Unit
			-5		-7		-10		
			Min	Max	Min	Max	Min	Max	
t_{EN}	Register enable time			0.7		1.0		1.3	ns
t_{GLOB}	Global control delay			1.1		1.6		2.0	ns
t_{PRE}	Register preset time			1.4		2.0		2.7	ns
t_{CLR}	Register clear time			1.4		2.0		2.7	ns
t_{PIA}	PIA delay	*(2)*		1.4		2.0		2.6	ns
t_{LPA}	Low-power adder	*(6)*		4.0		4.0		5.0	ns

EPM7256AEQI208-7N Intel IC CPLD 256MC 7.5NS 208QFP

Table 23. EPM7256AE External Timing Parameters *Note (1)*

Symbol	Parameter	Conditions	Speed Grade						Unit
			-5		-7		-10		
			Min	Max	Min	Max	Min	Max	
t_{PD1}	Input to non-registered output	C1 = 35 pF *(2)*		5.5		7.5		10	ns
t_{PD2}	I/O input to non-registered output	C1 = 35 pF *(2)*		5.5		7.5		10	ns
t_{SU}	Global clock setup time	*(2)*	3.9		5.2		6.9		ns
t_{H}	Global clock hold time	*(2)*	0.0		0.0		0.0		ns
t_{FSU}	Global clock setup time of fast input		2.5		3.0		3.0		ns
t_{FH}	Global clock hold time of fast input		0.0		0.0		0.0		ns
t_{CO1}	Global clock to output delay	C1 = 35 pF	1.0	3.5	1.0	4.8	1.0	6.4	ns
t_{CH}	Global clock high time		2.0		3.0		4.0		ns
t_{CL}	Global clock low time		2.0		3.0		4.0		ns
t_{ASU}	Array clock setup time	*(2)*	2.0		2.7		3.6		ns
t_{AH}	Array clock hold time	*(2)*	0.2		0.3		0.5		ns
t_{ACO1}	Array clock to output delay	C1 = 35 pF *(2)*	1.0	5.4	1.0	7.3	1.0	9.7	ns
t_{ACH}	Array clock high time		2.0		3.0		4.0		ns
t_{ACL}	Array clock low time		2.0		3.0		4.0		ns
t_{CPPW}	Minimum pulse width for clear and preset	*(3)*	2.0		3.0		4.0		ns
t_{CNT}	Minimum global clock period	*(2)*		5.8		7.9		10.5	ns
f_{CNT}	Maximum internal global clock frequency	*(2)*, *(4)*	172.4		126.6		95.2		MHz
t_{ACNT}	Minimum array clock period	*(2)*		5.8		7.9		10.5	ns
f_{ACNT}	Maximum internal array clock frequency	*(2)*, *(4)*	172.4		126.6		95.2		MHz

EPM7256AEQI208-7N Intel IC CPLD 256MC 7.5NS 208QFP

Table 24. EPM7256AE Internal Timing Parameters (Part 1 of 2) *Note (1)*

Symbol	Parameter	Conditions	Speed Grade						Unit
			-5		-7		-10		
			Min	Max	Min	Max	Min	Max	
t_{IN}	Input pad and buffer delay			0.7		0.9		1.2	ns
t_{IO}	I/O input pad and buffer delay			0.7		0.9		1.2	ns
t_{FIN}	Fast input delay			2.4		2.9		3.4	ns
t_{SEXP}	Shared expander delay			2.1		2.8		3.7	ns
t_{PEXP}	Parallel expander delay			0.3		0.5		0.6	ns
t_{LAD}	Logic array delay			1.7		2.2		2.8	ns
t_{LAC}	Logic control array delay			0.8		1.0		1.3	ns
t_{IOE}	Internal output enable delay			0.0		0.0		0.0	ns
t_{OD1}	Output buffer and pad delay, slow slew rate = off V_{CCIO} = 3.3 V	C1 = 35 pF		0.9		1.2		1.6	ns
t_{OD2}	Output buffer and pad delay, slow slew rate = off V_{CCIO} = 2.5 V	C1 = 35 pF *(5)*		1.4		1.7		2.1	ns
t_{OD3}	Output buffer and pad delay, slow slew rate = on V_{CCIO} = 2.5 V or 3.3 V	C1 = 35 pF		5.9		6.2		6.6	ns
t_{ZX1}	Output buffer enable delay, slow slew rate = off V_{CCIO} = 3.3 V	C1 = 35 pF		4.0		4.0		5.0	ns
t_{ZX2}	Output buffer enable delay, slow slew rate = off V_{CCIO} = 2.5 V	C1 = 35 pF *(5)*		4.5		4.5		5.5	ns
t_{ZX3}	Output buffer enable delay, slow slew rate = on V_{CCIO} = 3.3 V	C1 = 35 pF		9.0		9.0		10.0	ns
t_{XZ}	Output buffer disable delay	C1 = 5 pF		4.0		4.0		5.0	ns
t_{SU}	Register setup time		1.5		2.1		2.9		ns
t_{H}	Register hold time		0.7		0.9		1.2		ns
t_{FSU}	Register setup time of fast input		1.1		1.6		1.6		ns
t_{FH}	Register hold time of fast input		1.4		1.4		1.4		ns
t_{RD}	Register delay			0.9		1.2		1.6	ns
t_{COMB}	Combinatorial delay			0.5		0.8		1.2	ns

EPM7256AEQI208-7N Intel IC CPLD 256MC 7.5NS 208QFP

Table 24. EPM7256AE Internal Timing Parameters (Part 2 of 2) *Note (1)*

Symbol	Parameter	Conditions	Speed Grade						Unit
			-5		-7		-10		
			Min	Max	Min	Max	Min	Max	
t_{IC}	Array clock delay			1.2		1.6		2.1	ns
t_{EN}	Register enable time			0.8		1.0		1.3	ns
t_{GLOB}	Global control delay			1.0		1.5		2.0	ns
t_{PRE}	Register preset time			1.6		2.3		3.0	ns
t_{CLR}	Register clear time			1.6		2.3		3.0	ns
t_{PIA}	PIA delay	*(2)*		1.7		2.4		3.2	ns
t_{LPA}	Low-power adder	*(6)*		4.0		4.0		5.0	ns

EPM7256AEQI208-7N Intel IC CPLD 256MC 7.5NS 208QFP

Table 25. EPM7512AE External Timing Parameters *Note (1)*

Symbol	Parameter	Conditions	Speed Grade						Unit
			-7		-10		-12		
			Min	Max	Min	Max	Min	Max	
t_{PD1}	Input to non-registered output	C1 = 35 pF *(2)*		7.5		10.0		12.0	ns
t_{PD2}	I/O input to non-registered output	C1 = 35 pF *(2)*		7.5		10.0		12.0	ns
t_{SU}	Global clock setup time	*(2)*	5.6		7.6		9.1		ns
t_{H}	Global clock hold time	*(2)*	0.0		0.0		0.0		ns
t_{FSU}	Global clock setup time of fast input		3.0		3.0		3.0		ns
t_{FH}	Global clock hold time of fast input		0.0		0.0		0.0		ns
t_{CO1}	Global clock to output delay	C1 = 35 pF	1.0	4.7	1.0	6.3	1.0	7.5	ns
t_{CH}	Global clock high time		3.0		4.0		5.0		ns
t_{CL}	Global clock low time		3.0		4.0		5.0		ns
t_{ASU}	Array clock setup time	*(2)*	2.5		3.5		4.1		ns
t_{AH}	Array clock hold time	*(2)*	0.2		0.3		0.4		ns
t_{ACO1}	Array clock to output delay	C1 = 35 pF *(2)*	1.0	7.8	1.0	10.4	1.0	12.5	ns
t_{ACH}	Array clock high time		3.0		4.0		5.0		ns
t_{ACL}	Array clock low time		3.0		4.0		5.0		ns
t_{CPPW}	Minimum pulse width for clear and preset	*(3)*	3.0		4.0		5.0		ns
t_{CNT}	Minimum global clock period	*(2)*		8.6		11.5		13.9	ns
f_{CNT}	Maximum internal global clock frequency	*(2)*, *(4)*	116.3		87.0		71.9		MHz
t_{ACNT}	Minimum array clock period	*(2)*		8.6		11.5		13.9	ns
f_{ACNT}	Maximum internal array clock frequency	*(2)*, *(4)*	116.3		87.0		71.9		MHz

EPM7256AEQI208-7N Intel IC CPLD 256MC 7.5NS 208QFP

Table 26. EPM7512AE Internal Timing Parameters (Part 1 of 2) *Note (1)*

Symbol	Parameter	Conditions	Speed Grade						Unit
			-7		-10		-12		
			Min	Max	Min	Max	Min	Max	
t_{IN}	Input pad and buffer delay			0.7		0.9		1.0	ns
t_{IO}	I/O input pad and buffer delay			0.7		0.9		1.0	ns
t_{FIN}	Fast input delay			3.1		3.6		4.1	ns
t_{SEXP}	Shared expander delay			2.7		3.5		4.4	ns
t_{PEXP}	Parallel expander delay			0.4		0.5		0.6	ns
t_{LAD}	Logic array delay			2.2		2.8		3.5	ns
t_{LAC}	Logic control array delay			1.0		1.3		1.7	ns
t_{IOE}	Internal output enable delay			0.0		0.0		0.0	ns
t_{OD1}	Output buffer and pad delay, slow slew rate = off V_{CCIO} = 3.3 V	C1 = 35 pF		1.0		1.5		1.7	ns
t_{OD2}	Output buffer and pad delay, slow slew rate = off V_{CCIO} = 2.5 V	C1 = 35 pF *(5)*		1.5		2.0		2.2	ns
t_{OD3}	Output buffer and pad delay, slow slew rate = on V_{CCIO} = 2.5 V or 3.3 V	C1 = 35 pF		6.0		6.5		6.7	ns
t_{ZX1}	Output buffer enable delay, slow slew rate = off V_{CCIO} = 3.3 V	C1 = 35 pF		4.0		5.0		5.0	ns
t_{ZX2}	Output buffer enable delay, slow slew rate = off V_{CCIO} = 2.5 V	C1 = 35 pF *(5)*		4.5		5.5		5.5	ns
t_{ZX3}	Output buffer enable delay, slow slew rate = on V_{CCIO} = 3.3 V	C1 = 35 pF		9.0		10.0		10.0	ns
t_{XZ}	Output buffer disable delay	C1 = 5 pF		4.0		5.0		5.0	ns
t_{SU}	Register setup time		2.1		3.0		3.5		ns
t_{H}	Register hold time		0.6		0.8		1.0		ns
t_{FSU}	Register setup time of fast input		1.6		1.6		1.6		ns
t_{FH}	Register hold time of fast input		1.4		1.4		1.4		ns
t_{RD}	Register delay			1.3		1.7		2.1	ns
t_{COMB}	Combinatorial delay			0.6		0.8		1.0	ns

EPM7256AEQI208-7N Intel IC CPLD 256MC 7.5NS 208QFP

Table 26. EPM7512AE Internal Timing Parameters (Part 2 of 2) *Note (1)*

Symbol	Parameter	Conditions	Speed Grade						Unit
			-7		-10		-12		
			Min	Max	Min	Max	Min	Max	
t_{IC}	Array clock delay			1.8		2.3		2.9	ns
t_{EN}	Register enable time			1.0		1.3		1.7	ns
t_{GLOB}	Global control delay			1.7		2.2		2.7	ns
t_{PRE}	Register preset time			1.0		1.4		1.7	ns
t_{CLR}	Register clear time			1.0		1.4		1.7	ns
t_{PIA}	PIA delay	*(2)*		3.0		4.0		4.8	ns
t_{LPA}	Low-power adder	*(6)*		4.5		5.0		5.0	ns

EPM7256AEQI208-7N Intel IC CPLD 256MC 7.5NS 208QFP

Table 27. EPM7128A External Timing Parameters *Note (1)*

Symbol	Parameter	Conditions	Speed Grade								Unit
			-6		-7		-10		-12		
			Min	Max	Min	Max	Min	Max	Min	Max	
t_{PD1}	Input to non-registered output	C1 = 35 pF *(2)*		6.0		7.5		10.0		12.0	ns
t_{PD2}	I/O input to non-registered output	C1 = 35 pF *(2)*		6.0		7.5		10.0		12.0	ns
t_{SU}	Global clock setup time	*(2)*	4.2		5.3		7.0		8.5		ns
t_{H}	Global clock hold time	*(2)*	0.0		0.0		0.0		0.0		ns
t_{FSU}	Global clock setup time of fast input		2.5		3.0		3.0		3.0		ns
t_{FH}	Global clock hold time of fast input		0.0		0.0		0.0		0.0		ns
t_{CO1}	Global clock to output delay	C1 = 35 pF	1.0	3.7	1.0	4.6	1.0	6.1	1.0	7.3	ns
t_{CH}	Global clock high time		3.0		3.0		4.0		5.0		ns
t_{CL}	Global clock low time		3.0		3.0		4.0		5.0		ns
t_{ASU}	Array clock setup time	*(2)*	1.9		2.4		3.1		3.8		ns
t_{AH}	Array clock hold time	*(2)*	1.5		2.2		3.3		4.3		ns
t_{ACO1}	Array clock to output delay	C1 = 35 pF *(2)*	1.0	6.0	1.0	7.5	1.0	10.0	1.0	12.0	ns
t_{ACH}	Array clock high time		3.0		3.0		4.0		5.0		ns
t_{ACL}	Array clock low time		3.0		3.0		4.0		5.0		ns
t_{CPPW}	Minimum pulse width for clear and preset	*(3)*	3.0		3.0		4.0		5.0		ns
t_{CNT}	Minimum global clock period	*(2)*		6.9		8.6		11.5		13.8	ns
f_{CNT}	Maximum internal global clock frequency	*(2)*, *(4)*	144.9		116.3		87.0		72.5		MHz
t_{ACNT}	Minimum array clock period	*(2)*		6.9		8.6		11.5		13.8	ns
f_{ACNT}	Maximum internal array clock frequency	*(2)*, *(4)*	144.9		116.3		87		72.5		MHz

EPM7256AEQI208-7N Intel IC CPLD 256MC 7.5NS 208QFP

Table 28. EPM7128A Internal Timing Parameters (Part 1 of 2) *Note (1)*

Symbol	Parameter	Conditions	Speed Grade								Unit
			-6		-7		-10		-12		
			Min	Max	Min	Max	Min	Max	Min	Max	
t_{IN}	Input pad and buffer delay			0.6		0.7		0.9		1.1	ns
t_{IO}	I/O input pad and buffer delay			0.6		0.7		0.9		1.1	ns
t_{FIN}	Fast input delay			2.7		3.1		3.6		3.9	ns
t_{SEXP}	Shared expander delay			2.5		3.2		4.3		5.1	ns
t_{PEXP}	Parallel expander delay			0.7		0.8		1.1		1.3	ns
t_{LAD}	Logic array delay			2.4		3.0		4.1		4.9	ns
t_{LAC}	Logic control array delay			2.4		3.0		4.1		4.9	ns
t_{IOE}	Internal output enable delay			0.0		0.0		0.0		0.0	ns
t_{OD1}	Output buffer and pad delay, slow slew rate = off V_{CCIO} = 3.3 V	C1 = 35 pF		0.4		0.6		0.7		0.9	ns
t_{OD2}	Output buffer and pad delay, slow slew rate = off V_{CCIO} = 2.5 V	C1 = 35 pF *(5)*		0.9		1.1		1.2		1.4	ns
t_{OD3}	Output buffer and pad delay, slow slew rate = on V_{CCIO} = 2.5 V or 3.3 V	C1 = 35 pF		5.4		5.6		5.7		5.9	ns
t_{ZX1}	Output buffer enable delay, slow slew rate = off V_{CCIO} = 3.3 V	C1 = 35 pF		4.0		4.0		5.0		5.0	ns
t_{ZX2}	Output buffer enable delay, slow slew rate = off V_{CCIO} = 2.5 V	C1 = 35 pF *(5)*		4.5		4.5		5.5		5.5	ns
t_{ZX3}	Output buffer enable delay, slow slew rate = on V_{CCIO} = 3.3 V	C1 = 35 pF		9.0		9.0		10.0		10.0	ns
t_{XZ}	Output buffer disable delay	C1 = 5 pF		4.0		4.0		5.0		5.0	ns
t_{SU}	Register setup time		1.9		2.4		3.1		3.8		ns
t_{H}	Register hold time		1.5		2.2		3.3		4.3		ns
t_{FSU}	Register setup time of fast input		0.8		1.1		1.1		1.1		ns
t_{FH}	Register hold time of fast input		1.7		1.9		1.9		1.9		ns

EPM7256AEQI208-7N Intel IC CPLD 256MC 7.5NS 208QFP

Table 28. EPM7128A Internal Timing Parameters (Part 2 of 2) *Note (1)*

Symbol	Parameter	Conditions	Speed Grade								Unit
			-6		-7		-10		-12		
			Min	Max	Min	Max	Min	Max	Min	Max	
t_{RD}	Register delay			1.7		2.1		2.8		3.3	ns
t_{COMB}	Combinatorial delay			1.7		2.1		2.8		3.3	ns
t_{IC}	Array clock delay			2.4		3.0		4.1		4.9	ns
t_{EN}	Register enable time			2.4		3.0		4.1		4.9	ns
t_{GLOB}	Global control delay			1.0		1.2		1.7		2.0	ns
t_{PRE}	Register preset time			3.1		3.9		5.2		6.2	ns
t_{CLR}	Register clear time			3.1		3.9		5.2		6.2	ns
t_{PIA}	PIA delay	*(2)*		0.9		1.1		1.5		1.8	ns
t_{LPA}	Low-power adder	*(6)*		11.0		10.0		10.0		10.0	ns

EPM7256AEQI208-7N Intel IC CPLD 256MC 7.5NS 208QFP

Table 29. EPM7256A External Timing Parameters *Note (1)*

Symbol	Parameter	Conditions	Speed Grade								Unit
			-6		-7		-10		-12		
			Min	Max	Min	Max	Min	Max	Min	Max	
t_{PD1}	Input to non-registered output	C1 = 35 pF *(2)*		6.0		7.5		10.0		12.0	ns
t_{PD2}	I/O input to non-registered output	C1 = 35 pF *(2)*		6.0		7.5		10.0		12.0	ns
t_{SU}	Global clock setup time	*(2)*	3.7		4.6		6.2		7.4		ns
t_{H}	Global clock hold time	*(2)*	0.0		0.0		0.0		0.0		ns
t_{FSU}	Global clock setup time of fast input		2.5		3.0		3.0		3.0		ns
t_{FH}	Global clock hold time of fast input		0.0		0.0		0.0		0.0		ns
t_{CO1}	Global clock to output delay	C1 = 35 pF	1.0	3.3	1.0	4.2	1.0	5.5	1.0	6.6	ns
t_{CH}	Global clock high time		3.0		3.0		4.0		4.0		ns
t_{CL}	Global clock low time		3.0		3.0		4.0		4.0		ns
t_{ASU}	Array clock setup time	*(2)*	0.8		1.0		1.4		1.6		ns
t_{AH}	Array clock hold time	*(2)*	1.9		2.7		4.0		5.1		ns
t_{ACO1}	Array clock to output delay	C1 = 35 pF *(2)*	1.0	6.2	1.0	7.8	1.0	10.3	1.0	12.4	ns
t_{ACH}	Array clock high time		3.0		3.0		4.0		4.0		ns
t_{ACL}	Array clock low time		3.0		3.0		4.0		4.0		ns
t_{CPPW}	Minimum pulse width for clear and preset	*(3)*	3.0		3.0		4.0		4.0		ns
t_{CNT}	Minimum global clock period	*(2)*		6.4		8.0		10.7		12.8	ns
f_{CNT}	Maximum internal global clock frequency	*(2)*, *(4)*	156.3		125.0		93.5		78.1		MHz
t_{ACNT}	Minimum array clock period	*(2)*		6.4		8.0		10.7		12.8	ns
f_{ACNT}	Maximum internal array clock frequency	*(2)*, *(4)*	156.3		125.0		93.5		78.1		MHz

EPM7256AEQI208-7N Intel IC CPLD 256MC 7.5NS 208QFP

Table 30. EPM7256A Internal Timing Parameters (Part 1 of 2) *Note (1)*

Symbol	Parameter	Conditions	Speed Grade								Unit
			-6		-7		-10		-12		
			Min	Max	Min	Max	Min	Max	Min	Max	
t_{IN}	Input pad and buffer delay			0.3		0.4		0.5		0.6	ns
t_{IO}	I/O input pad and buffer delay			0.3		0.4		0.5		0.6	ns
t_{FIN}	Fast input delay			2.4		3.0		3.4		3.8	ns
t_{SEXP}	Shared expander delay			2.8		3.5		4.7		5.6	ns
t_{PEXP}	Parallel expander delay			0.5		0.6		0.8		1.0	ns
t_{LAD}	Logic array delay			2.5		3.1		4.2		5.0	ns
t_{LAC}	Logic control array delay			2.5		3.1		4.2		5.0	ns
t_{IOE}	Internal output enable delay			0.2		0.3		0.4		0.5	ns
t_{OD1}	Output buffer and pad delay, slow slew rate = off V_{CCIO} = 3.3 V	C1 = 35 pF		0.3		0.4		0.5		0.6	ns
t_{OD2}	Output buffer and pad delay, slow slew rate = off V_{CCIO} = 2.5 V	C1 = 35 pF *(5)*		0.8		0.9		1.0		1.1	ns
t_{OD3}	Output buffer and pad delay slow slew rate = on V_{CCIO} = 2.5 V or 3.3 V	C1 = 35 pF		5.3		5.4		5.5		5.6	ns
t_{ZX1}	Output buffer enable delay slow slew rate = off V_{CCIO} = 3.3 V	C1 = 35 pF		4.0		4.0		5.0		5.0	ns
t_{ZX2}	Output buffer enable delay slow slew rate = off V_{CCIO} = 2.5 V	C1 = 35 pF *(5)*		4.5		4.5		5.5		5.5	ns
t_{ZX3}	Output buffer enable delay slow slew rate = on V_{CCIO} = 2.5 V or 3.3 V	C1 = 35 pF		9.0		9.0		10.0		10.0	ns
t_{XZ}	Output buffer disable delay	C1 = 5 pF		4.0		4.0		5.0		5.0	ns
t_{SU}	Register setup time		1.0		1.3		1.7		2.0		ns
t_{H}	Register hold time		1.7		2.4		3.7		4.7		ns
t_{FSU}	Register setup time of fast input		1.2		1.4		1.4		1.4		ns
t_{FH}	Register hold time of fast input		1.3		1.6		1.6		1.6		ns
t_{RD}	Register delay			1.6		2.0		2.7		3.2	ns

EPM7256AEQI208-7N Intel IC CPLD 256MC 7.5NS 208QFP

Table 30. EPM7256A Internal Timing Parameters (Part 2 of 2) *Note (1)*

Symbol	Parameter	Conditions	Speed Grade								Unit
			-6		-7		-10		-12		
			Min	Max	Min	Max	Min	Max	Min	Max	
t_{COMB}	Combinatorial delay			1.6		2.0		2.7		3.2	ns
t_{IC}	Array clock delay			2.7		3.4		4.5		5.4	ns
t_{EN}	Register enable time			2.5		3.1		4.2		5.0	ns
t_{GLOB}	Global control delay			1.1		1.4		1.8		2.2	ns
t_{PRE}	Register preset time			2.3		2.9		3.8		4.6	ns
t_{CLR}	Register clear time			2.3		2.9		3.8		4.6	ns
t_{PIA}	PIA delay	*(2)*		1.3		1.6		2.1		2.6	ns
t_{LPA}	Low-power adder	*(6)*		11.0		10.0		10.0		10.0	ns

Notes to tables:

(1) These values are specified under the recommended operating conditions shown in Table 14 on page 28. See Figure 12 for more information on switching waveforms.
(2) These values are specified for a PIA fan-out of one LAB (16 macrocells). For each additional LAB fan-out in these devices, add an additional 0.1 ns to the PIA timing value.
(3) This minimum pulse width for preset and clear applies for both global clear and array controls. The t_{LPA} parameter must be added to this minimum width if the clear or reset signal incorporates the t_{LAD} parameter into the signal path.
(4) This parameter is measured with a 16-bit loadable, enabled, up/down counter programmed into each LAB.
(5) Operating conditions: $V_{CCIO} = 2.5 \pm 0.2$ V for commercial and industrial use.
(6) The t_{LPA} parameter must be added to the t_{LAD}, t_{LAC}, t_{IC}, t_{EN}, t_{SEXP}, $\mathbf{t_{ACL}}$, and $\mathbf{t_{CPPW}}$ parameters for macrocells running in low-power mode.

Power Consumption

Supply power (P) versus frequency ($\mathbf{f_{MAX}}$, in MHz) for MAX 7000A devices is calculated with the following equation:

$$P = P_{INT} + P_{IO} = I_{CCINT} \times V_{CC} + P_{IO}$$

The P_{IO} value, which depends on the device output load characteristics and switching frequency, can be calculated using the guidelines given in *Application Note 74 (Evaluating Power for Altera Devices)*.

The I_{CCINT} value depends on the switching frequency and the application logic. The I_{CCINT} value is calculated with the following equation:

$$I_{CCINT} =$$

$$(A \times MC_{TON}) + [B \times (MC_{DEV} - MC_{TON})] + (C \times MC_{USED} \times \mathbf{f_{MAX}} \times \mathbf{tog_{LC}})$$

EPM7256AEQI208-7N Intel IC CPLD 256MC 7.5NS 208QFP

The parameters in this equation are:

MC_{TON} = Number of macrocells with the Turbo Bit option turned on, as reported in the MAX+PLUS II Report File (**.rpt**)
MC_{DEV} = Number of macrocells in the device
MC_{USED} = Total number of macrocells in the design, as reported in the Report File
$\mathbf{f_{MAX}}$ = Highest clock frequency to the device
$\mathbf{tog_{LC}}$ = Average percentage of logic cells toggling at each clock (typically 12.5%)
A, B, C = Constants, shown in Table 31

Table 31. MAX 7000A I_{CC} Equation Constants

Device	A	B	C
EPM7032AE	0.71	0.30	0.014
EPM7064AE	0.71	0.30	0.014
EPM7128A	0.71	0.30	0.014
EPM7128AE	0.71	0.30	0.014
EPM7256A	0.71	0.30	0.014
EPM7256AE	0.71	0.30	0.014
EPM7512AE	0.71	0.30	0.014

This calculation provides an I_{CC} estimate based on typical conditions using a pattern of a 16-bit, loadable, enabled, up/down counter in each LAB with no output load. Actual I_{CC} should be verified during operation because this measurement is sensitive to the actual pattern in the device and the environmental operating conditions.

EPM7256AEQI208-7N Intel IC CPLD 256MC 7.5NS 208QFP

Figure 13 shows the typical supply current versus frequency for MAX 7000A devices.

Figure 13. I_{CC} vs. Frequency for MAX 7000A Devices (Part 1 of 2)

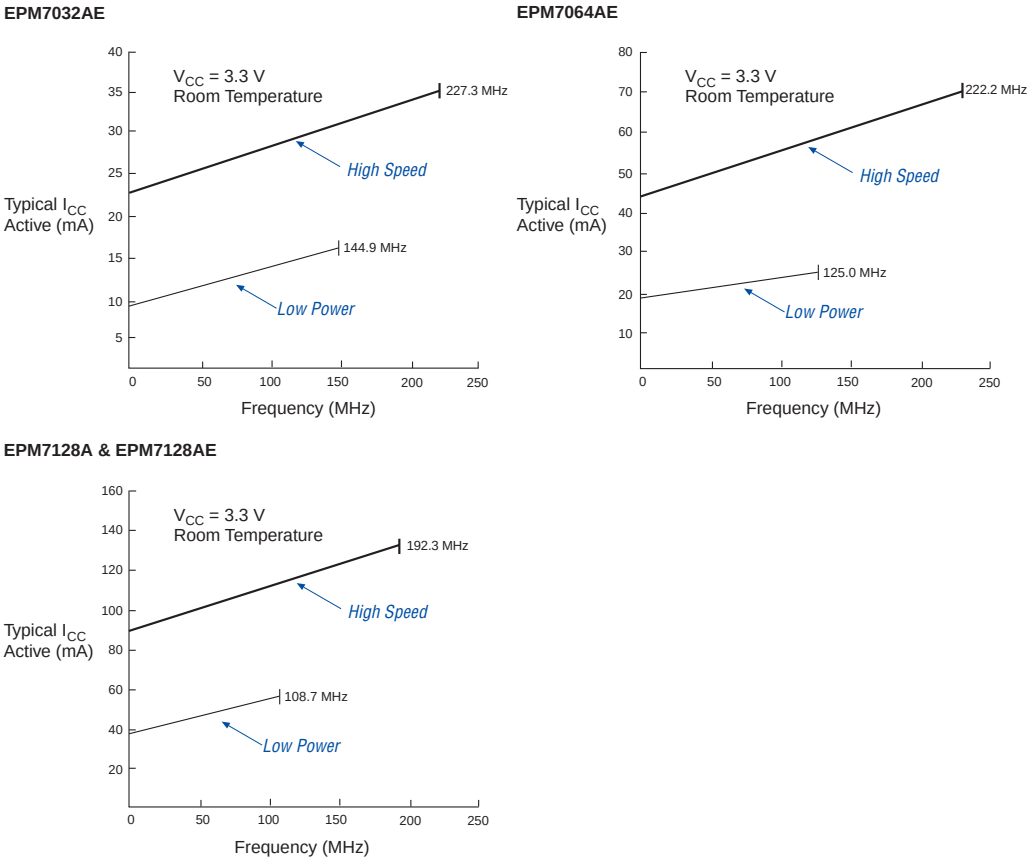

EPM7256AEQI208-7N Intel IC CPLD 256MC 7.5NS 208QFP

Figure 13. I_{CC} vs. Frequency for MAX 7000A Devices (Part 2 of 2)

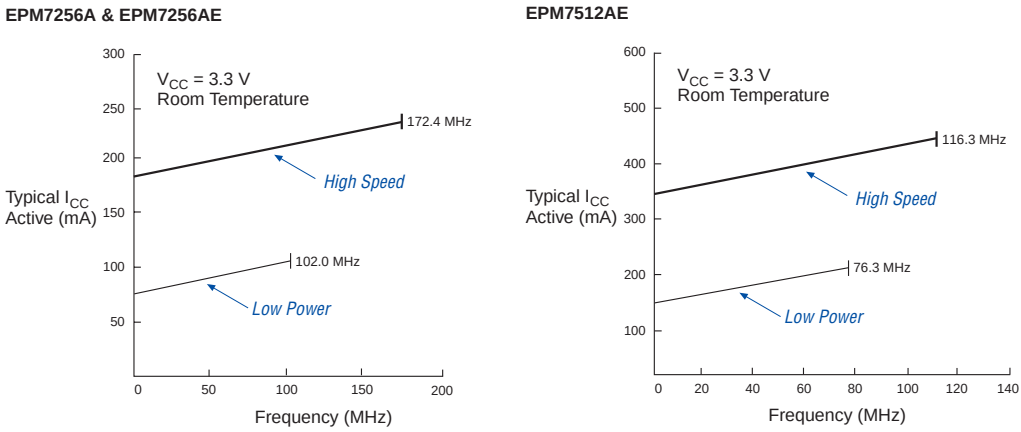

Device Pin-Outs

See the Altera web site (**http://www.altera.com**) or the *Altera Digital Library* for pin-out information.

Figures 14 through 23 show the package pin-out diagrams for MAX 7000A devices.

Figure 14. 44-Pin PLCC/TQFP Package Pin-Out Diagram

Package outlines not drawn to scale.

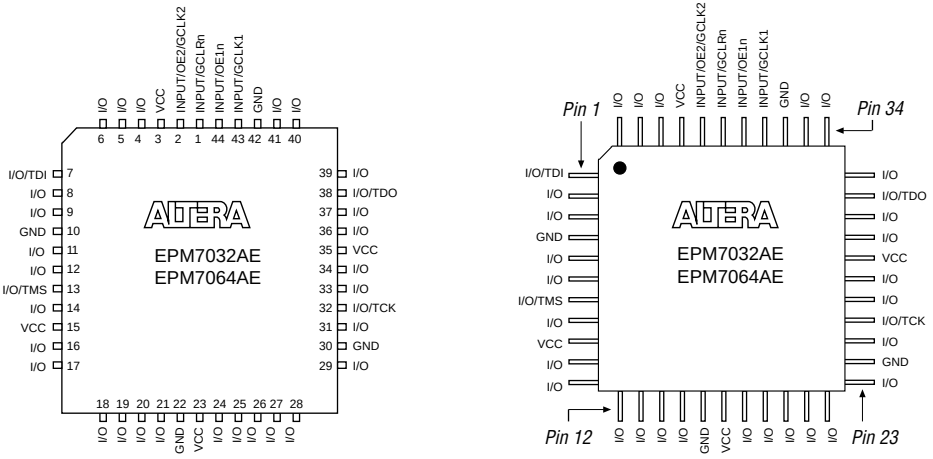

44-Pin PLCC

44-Pin TQFP

EPM7256AEQI208-7N Intel IC CPLD 256MC 7.5NS 208QFP

Figure 15. 49-Pin Ultra FineLine BGA Package Pin-Out Diagram

Package outlines not drawn to scale.

Figure 16. 84-Pin PLCC Package Pin-Out Diagram

Package outline not drawn to scale.

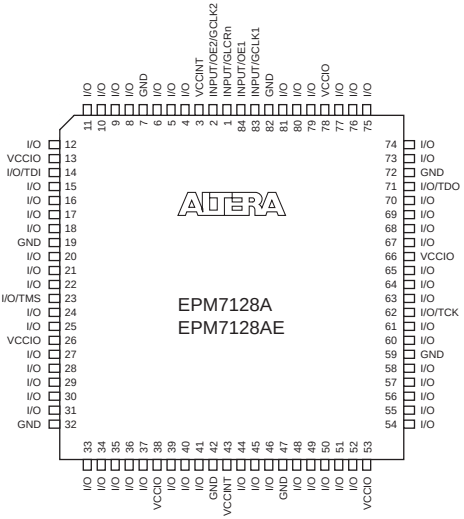

EPM7256AEQI208-7N Intel IC CPLD 256MC 7.5NS 208QFP

Figure 17. 100-Pin TQFP Package Pin-Out Diagram

Package outline not drawn to scale.

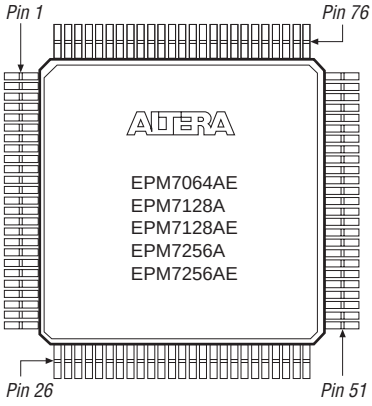

Figure 18. 100-Pin FineLine BGA Package Pin-Out Diagram

Package outline not drawn to scale.

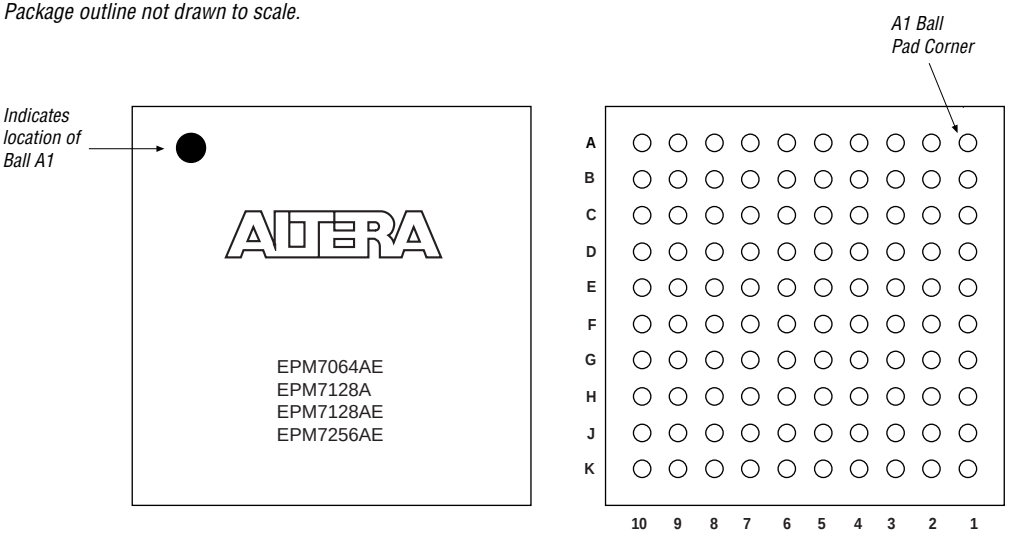

EPM7256AEQI208-7N Intel IC CPLD 256MC 7.5NS 208QFP

Figure 19. 144-Pin TQFP Package Pin-Out Diagram

Package outline not drawn to scale.

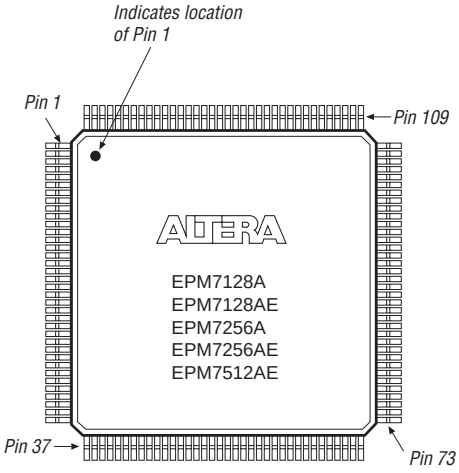

Figure 20. 169-Pin Ultra FineLine BGA Package Pin-Out Diagram

Package outline not drawn to scale.

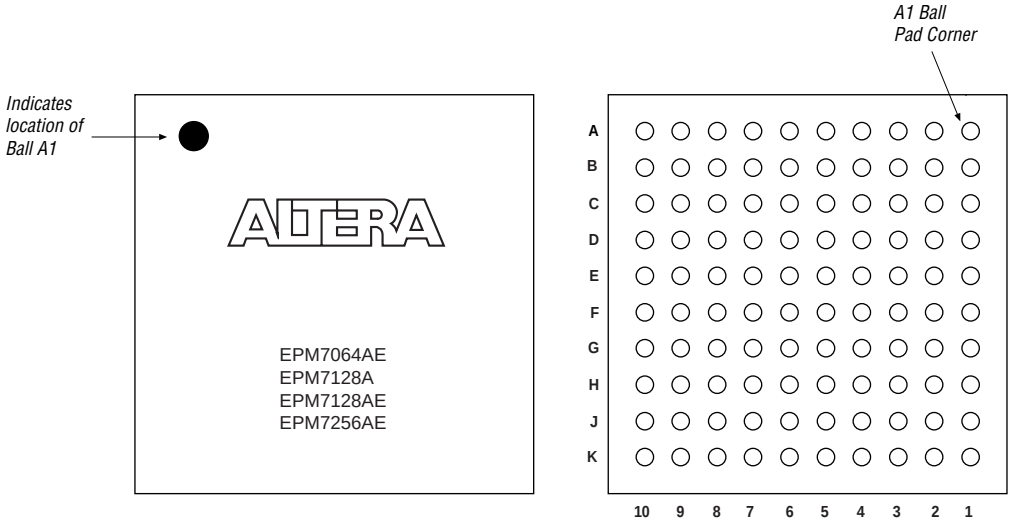

EPM7256AEQI208-7N Intel IC CPLD 256MC 7.5NS 208QFP

Figure 21. 208-Pin PQFP Package Pin-Out Diagram

Package outline not drawn to scale.

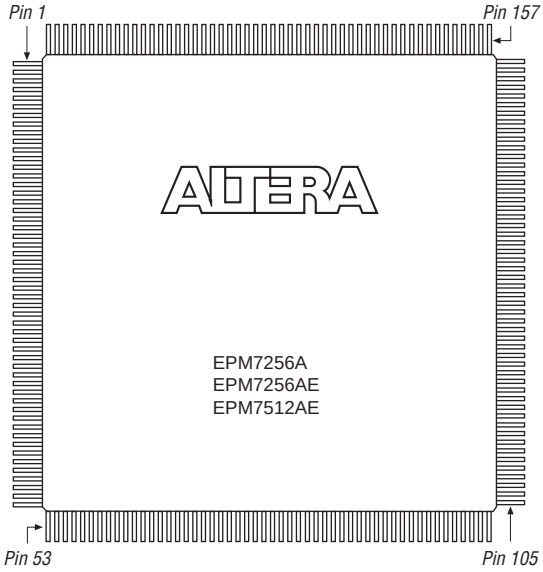

EPM7256AEQI208-7N Intel IC CPLD 256MC 7.5NS 208QFP

Figure 22. 256-Pin BGA Package Pin-Out Diagram

Package outline not drawn to scale.

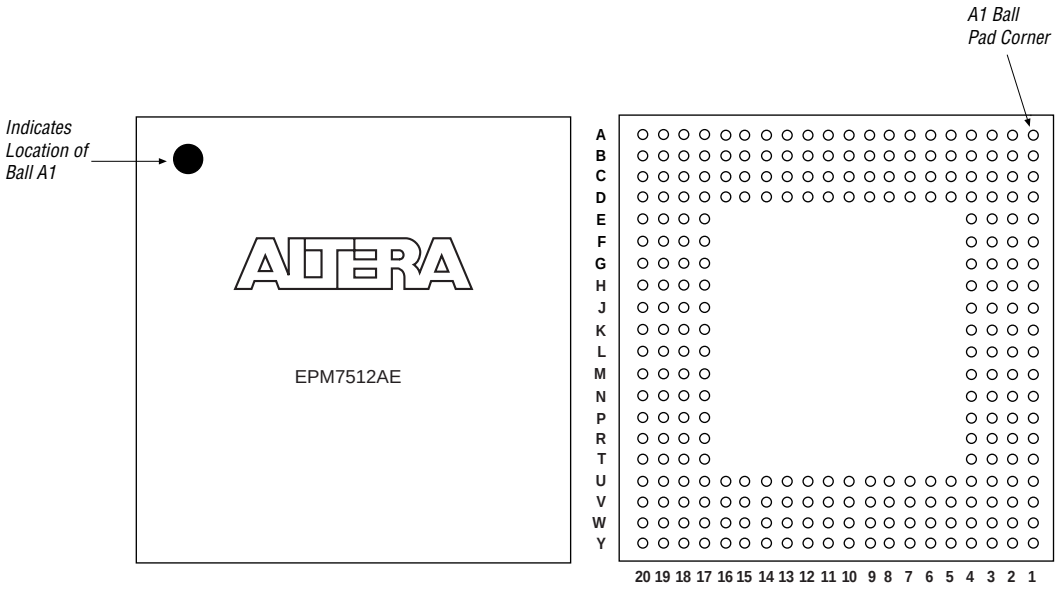

EPM7256AEQI208-7N Intel IC CPLD 256MC 7.5NS 208QFP

Figure 23. 256-Pin FineLine BGA Package Pin-Out Diagram

Package outline not drawn to scale.

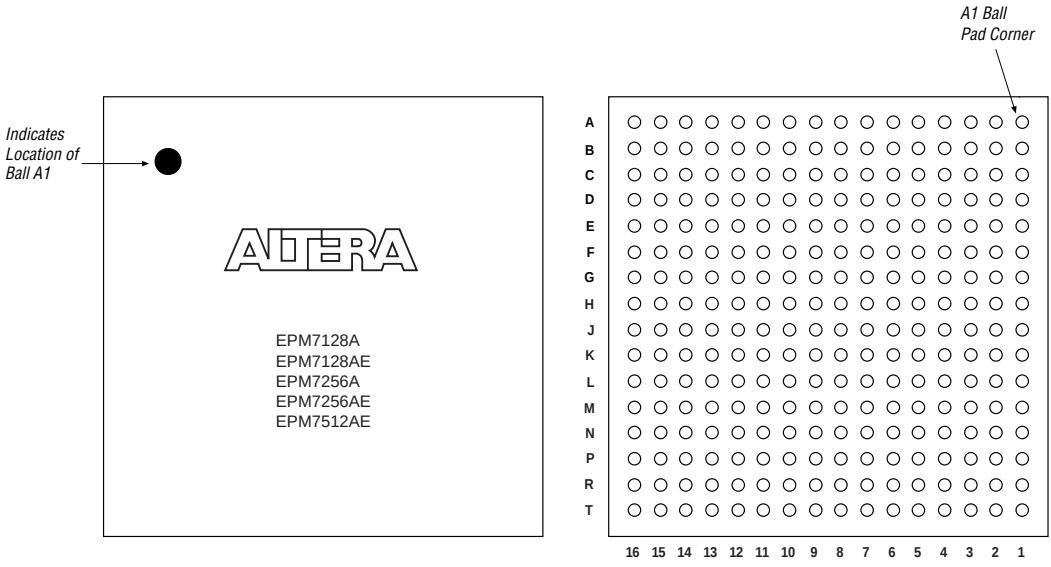

Revision History

The information contained in the *MAX 7000A Programmable Logic Device Data Sheet* version 4.5 supersedes information published in previous versions.

Version 4.5

The following changes were made in the *MAX 7000A Programmable Logic Device Data Sheet* version 4.5:

- Updated text in the "Power Sequencing & Hot-Socketing" section.

Version 4.4

The following changes were made in the *MAX 7000A Programmable Logic Device Data Sheet* version 4.4:

- Added Tables 5 through 7.
- Added "Programming Sequence" on page 17 and "Programming Times" on page 18.

EPM7256AEQI208-7N Intel IC CPLD 256MC 7.5NS 208QFP

Version 4.3

The following changes were made in the *MAX 7000A Programmable Logic Device Data Sheet* version 4.3:

- Added extended temperature devices to document
- Updated Table 14.

Version 4.2

The following changes were made in the *MAX 7000A Programmable Logic Device Data Sheet* version 4.2:

- Removed *Note (1)* from Table 2.
- Removed *Note (4)* from Tables 3 and 4.

Version 4.1

The following changes were made in the *MAX 7000A Programmable Logic Device Data Sheet* version 4.1:

- Updated leakage current information in Table 15.
- Updated *Note (9)* of Table 15.
- Updated *Note (1)* of Tables 17 through 30.

101 Innovation Drive
San Jose, CA 95134
(408) 544-7000
http://www.altera.com
Applications Hotline:
(800) 800-EPLD
Literature Services:
lit_req@altera.com

Copyright © 2003 Altera Corporation. All rights reserved. Altera, The Programmable Solutions Company, the stylized Altera logo, specific device designations, and all other words and logos that are identified as trademarks and/or service marks are, unless noted otherwise, the trademarks and service marks of Altera Corporation in the U.S. and other countries. All other product or service names are the property of their respective holders. Altera products are protected under numerous U.S. and foreign patents and pending applications, maskwork rights, and copyrights. Altera warrants performance of its semiconductor products to current specifications in accordance with Altera's standard warranty, but reserves the right to make changes to any products and services at any time without notice. Altera assumes no responsibility or liability arising out of the application or use of any information, product, or service described herein except as expressly agreed to in writing by Altera Corporation. Altera customers are advised to obtain the latest version of device specifications before relying on any published information and before placing orders for products or services.

I.S. EN ISO 9001

FPGAMALL
Authorized Distributor

OUR CERTIFICATE

A long-term cooperative relationship can be built between global customers and us by providing excellent products

Business Type	Trading Company, Distributor/Wholesaler
Main Products	Electronic Integrated Circuit
Certifications	ISO9001
Total Annual Revenue	US$2.5 Million - US$5 Million
Country / Region	Hongkong, China
Total Employees	100 - 200 People
Year Established	2018
Main Markets	North America South Asia Western Europe

sales@fpgamall.com +00852-56428680