https://www.fpgamall.com

THE DATASHEET OF FPGA

Virtex-II Pro and Virtex-II Pro X Platform FPGAs: Complete Data Sheet

DS083 (v5.0) June 21, 2011 **Product Specification**

Module 1: Introduction and Overview

10 pages

- Summary of Features
- General Description
- Architecture
- IP Core and Reference Support
- Device/Package Combinations and Maximum I/O
- Ordering Information

Module 2: Functional Description

60 pages

- Functional Description: RocketIO™ X Multi-Gigabit Transceiver
- Functional Description: RocketIO Multi-Gigabit Transceiver
- Functional Description: Processor Block
- Functional Description: PowerPC™ 405 Core
- Functional Description: FPGA
  - Input/Output Blocks (IOBs)
  - Digitally Controlled Impedance (DCI)
  - On-Chip Differential Termination
  - Configurable Logic Blocks (CLBs)
  - 3-State Buffers
  - CLB/Slice Configurations
  - 18-Kb Block SelectRAM™ Resources
  - 18-Bit x 18-Bit Multipliers
  - Global Clock Multiplexer Buffers
  - Digital Clock Manager (DCM)
- Routing
- Configuration

Module 3: DC and Switching Characteristics

59 pages

- Electrical Characteristics
- Performance Characteristics
- Switching Characteristics
- Pin-to-Pin Output Parameter Guidelines
- Pin-to-Pin Input Parameter Guidelines
- DCM Timing Parameters
- Source-Synchronous Switching Characteristics

Module 4: Pinout Information

302 pages

- Pin Definitions
- Pinout Tables
  - FG256/FGG256 Wire-Bond Fine-Pitch BGA Package
  - FG456/FGG456 Wire-Bond Fine-Pitch BGA Package
  - FG676/FGG676 Wire-Bond Fine-Pitch BGA Package
  - FF672 Flip-Chip Fine-Pitch BGA Package
  - FF896 Flip-Chip Fine-Pitch BGA Package
  - FF1148 Flip-Chip Fine-Pitch BGA Package
  - FF1152 Flip-Chip Fine-Pitch BGA Package
  - FF1517 Flip-Chip Fine-Pitch BGA Package
  - FF1696 Flip-Chip Fine-Pitch BGA Package
  - FF1704 Flip-Chip Fine-Pitch BGA Package

IMPORTANT NOTE: *Page, figure, and table numbers begin at 1 for each module, and each module has its own Revision History at the end. Use the PDF "Bookmarks" pane for easy navigation in this volume.*

© 2000–2011 Xilinx, Inc. All rights reserved. XILINX, the Xilinx logo, the Brand Window, and other designated brands included herein are trademarks of Xilinx, Inc. PowerPC is a trademark of IBM Corp. and is used under license. All other trademarks are the property of their respective owners.

Virtex-II Pro and Virtex-II Pro X Platform FPGAs: Introduction and Overview

DS083 (v5.0) June 21, 2011 **Product Specification**

Summary of Virtex-II Pro™ / Virtex-II Pro X Features

- High-Performance Platform FPGA Solution, Including
  - Up to twenty RocketIO™ or RocketIO X embedded Multi-Gigabit Transceivers (MGTs)
  - Up to two IBM PowerPC™ RISC processor blocks
- Based on Virtex-II™ Platform FPGA Technology
  - Flexible logic resources
  - SRAM-based in-system configuration
  - Active Interconnect technology
  - SelectRAM™+ memory hierarchy
  - Dedicated 18-bit x 18-bit multiplier blocks
  - High-performance clock management circuitry
  - SelectI/O™-Ultra technology
  - XCITE Digitally Controlled Impedance (DCI) I/O

Virtex-II Pro / Virtex-II Pro X family members and resources are shown in Table 1.

Table 1: **Virtex-II Pro / Virtex-II Pro X FPGA Family Members**

Device[1]	RocketIO Transceiver Blocks	PowerPC Processor Blocks	Logic Cells[2]	CLB (1 = 4 slices = max 128 bits)		18 X 18 Bit Multiplier Blocks	Block SelectRAM+		DCMs	Maximum User I/O Pads
				Slices	Max Distr RAM (Kb)		18 Kb Blocks	Max Block RAM (Kb)		
XC2VP2	4	0	3,168	1,408	44	12	12	216	4	204
XC2VP4	4	1	6,768	3,008	94	28	28	504	4	348
XC2VP7	8	1	11,088	4,928	154	44	44	792	4	396
XC2VP20	8	2	20,880	9,280	290	88	88	1,584	8	564
XC2VPX20	8[4]	1	22,032	9,792	306	88	88	1,584	8	552
XC2VP30	8	2	30,816	13,696	428	136	136	2,448	8	644
XC2VP40	0[3], 8, or 12	2	43,632	19,392	606	192	192	3,456	8	804
XC2VP50	0[3] or 16	2	53,136	23,616	738	232	232	4,176	8	852
XC2VP70	16 or 20	2	74,448	33,088	1,034	328	328	5,904	8	996
XC2VPX70	20[4]	2	74,448	33,088	1,034	308	308	5,544	8	992
XC2VP100	0[3] or 20	2	99,216	44,096	1,378	444	444	7,992	12	1,164

Notes:
1. -7 speed grade devices are not available in Industrial grade.
2. Logic Cell ≈ (1) 4-input LUT + (1)FF + Carry Logic
3. These devices can be ordered in a configuration without RocketIO transceivers. See Table 3 for package configurations.
4. Virtex-II Pro X devices equipped with RocketIO X transceiver cores.

RocketIO X Transceiver Features (XC2VPX20 and XC2VPX70 Only)

- Variable-Speed Full-Duplex Transceiver (XC2VPX20) Allowing 2.488 Gb/s to 6.25 Gb/s Baud Transfer Rates.
  - Includes specific baud rates used by various standards, as listed in Table 4, Module 2.
- Fixed-Speed Full-Duplex Tranceiver (XC2VPX70) Operating at 4.25 Gb/s Baud Transfer Rate.
- Eight or Twenty Transceiver Modules on an FPGA, Depending upon Device
- Monolithic Clock Synthesis and Clock Recovery
  - Eliminates the need for external components
- Automatic Lock-to-Reference Function
- Programmable Serial Output Differential Swing
  - 200 mV to 1600 mV, peak-peak
  - Allows compatibility with other serial system voltage levels
- Programmable Pre-emphasis Levels 0 to 500%
- Telecom/Datacom Support Modes
  - "x8" and "x10" clocking/data paths
  - 64B/66B clocking support

© 2000–2011 Xilinx, Inc. All rights reserved. XILINX, the Xilinx logo, the Brand Window, and other designated brands included herein are trademarks of Xilinx, Inc. PowerPC is a trademark of IBM Corp. and is used under license. All other trademarks are the property of their respective owners.

- Programmable Receiver Equalization
- Internal AC Coupling
- On-Chip 50Ω Termination
  - Eliminates the need for external termination resistors
- Pre- and Post-Driver Serial and Parallel TX-to-RX Internal Loopback Modes for Testing Operability
- Programmable Comma Detection
  - Allows for any protocol
  - Allows for detection of any 10-bit character
- 8B/10B and 64B/66B Encoding Blocks

RocketIO Transceiver Features (All Except XC2VPX20 and XC2VPX70)

- Full-Duplex Serial Transceiver (SERDES) Capable of Baud Rates from 600 Mb/s to 3.125 Gb/s
- 100 Gb/s Duplex Data Rate (20 Channels)
- Monolithic Clock Synthesis and Clock Recovery (CDR)
- Fibre Channel, 10G Fibre Channel, Gigabit Ethernet, 10 Gb Attachment Unit Interface (XAUI), and Infiniband-Compliant Transceivers
- 8-, 16-, or 32-bit Selectable Internal FPGA Interface
- 8B/10B Encoder and Decoder (optional)
- 50Ω/75Ω on-chip Selectable Transmit and Receive Terminations
- Programmable Comma Detection
- Channel Bonding Support (from 2 to 20 Channels)
- Rate Matching via Insertion/Deletion Characters
- Four Levels of Selectable Pre-Emphasis
- Five Levels of Output Differential Voltage
- Per-Channel Internal Loopback Modes
- 2.5V Transceiver Supply Voltage

PowerPC RISC Processor Block Features (All Except XC2VP2)

- Embedded 300+ MHz Harvard Architecture Block
- Low Power Consumption: 0.9 mW/MHz
- Five-Stage Data Path Pipeline
- Hardware Multiply/Divide Unit
- Thirty-Two 32-bit General Purpose Registers
- 16 KB Two-Way Set-Associative Instruction Cache
- 16 KB Two-Way Set-Associative Data Cache
- Memory Management Unit (MMU)
  - 64-entry unified Translation Look-aside Buffers (TLB)
  - Variable page sizes (1 KB to 16 MB)
- Dedicated On-Chip Memory (OCM) Interface
- Supports IBM CoreConnect™ Bus Architecture
- Debug and Trace Support
- Timer Facilities

Virtex-II Pro Platform FPGA Technology (All Devices)

- SelectRAM+ Memory Hierarchy
  - Up to 8 Mb of True Dual-Port RAM in 18 Kb block SelectRAM+ resources
  - Up to 1,378 Kb of distributed SelectRAM+ resources
  - High-performance interfaces to external memory
- Arithmetic Functions
  - Dedicated 18-bit x 18-bit multiplier blocks
  - Fast look-ahead carry logic chains
- Flexible Logic Resources
  - Up to 88,192 internal registers/latches with Clock Enable
  - Up to 88,192 look-up tables (LUTs) or cascadable variable (1 to 16 bits) shift registers
  - Wide multiplexers and wide-input function support
  - Horizontal cascade chain and Sum-of-Products support
  - Internal 3-state busing
- High-Performance Clock Management Circuitry
  - Up to twelve Digital Clock Manager (DCM) modules
    - Precise clock de-skew
    - Flexible frequency synthesis
    - High-resolution phase shifting
  - 16 global clock multiplexer buffers in all parts
- Active Interconnect Technology
  - Fourth-generation segmented routing structure
  - Fast, predictable routing delay, independent of fanout
  - Deep sub-micron noise immunity benefits
- SelectIO™-Ultra Technology
  - Up to 1,164 user I/Os
  - Twenty-two single-ended standards and ten differential standards
  - Programmable LVCMOS sink/source current (2 mA to 24 mA) per I/O
  - XCITE Digitally Controlled Impedance (DCI) I/O
  - PCI/PCI-X support (1)
  - Differential signaling
    - 840 Mb/s Low-Voltage Differential Signaling I/O (LVDS) with current mode drivers
    - On-chip differential termination
    - Bus LVDS I/O

1. Refer to XAPP653 for more information.

  - HyperTransport (LDT) I/O with current driver buffers
  - Built-in DDR input and output registers
- Proprietary high-performance SelectLink technology for communications between Xilinx devices
  - High-bandwidth data path
  - Double Data Rate (DDR) link
  - Web-based HDL generation methodology
- SRAM-Based In-System Configuration
  - Fast SelectMAP™ configuration
  - Triple Data Encryption Standard (DES) security option (bitstream encryption)
  - IEEE 1532 support
  - Partial reconfiguration
  - Unlimited reprogrammability
  - Readback capability
- Supported by Xilinx Foundation™ and Alliance Series™ Development Systems
  - Integrated VHDL and Verilog design flows
  - ChipScope™ Integrated Logic Analyzer
- 0.13 µm Nine-Layer Copper Process with 90 nm High-Speed Transistors
- 1.5V (V_{CCINT}) core power supply, dedicated 2.5V V_{CCAUX} auxiliary and V_{CCO} I/O power supplies
- IEEE 1149.1 Compatible Boundary-Scan Logic Support
- Flip-Chip and Wire-Bond Ball Grid Array (BGA) Packages in Standard 1.00 mm Pitch.
- Wire-Bond BGA Devices Available in Pb-Free Packaging (**www.xilinx.com/pbfree)**
- Each Device 100% Factory Tested

General Description

The Virtex-II Pro and Virtex-II Pro X families contain platform FPGAs for designs that are based on IP cores and customized modules. The family incorporates multi-gigabit transceivers and PowerPC CPU blocks in Virtex-II Pro Series FPGA architecture. It empowers complete solutions for telecommunication, wireless, networking, video, and DSP applications.

The leading-edge 0.13 µm CMOS nine-layer copper process and Virtex-II Pro architecture are optimized for high performance designs in a wide range of densities. Combining a wide variety of flexible features and IP cores, the Virtex-II Pro family enhances programmable logic design capabilities and is a powerful alternative to mask-programmed gate arrays.

Architecture

Array Overview

Virtex-II Pro and Virtex-II Pro X devices are user-programmable gate arrays with various configurable elements and embedded blocks optimized for high-density and high-performance system designs. Virtex-II Pro devices implement the following functionality:

- Embedded high-speed serial transceivers enable data bit rate up to 3.125 Gb/s per channel (RocketIO) or 6.25 Gb/s (RocketIO X).
- Embedded IBM PowerPC 405 RISC processor blocks provide performance up to 400 MHz.
- SelectIO-Ultra blocks provide the interface between package pins and the internal configurable logic. Most popular and leading-edge I/O standards are supported by the programmable IOBs.
- Configurable Logic Blocks (CLBs) provide functional elements for combinatorial and synchronous logic, including basic storage elements. BUFTs (3-state buffers) associated with each CLB element drive dedicated segmentable horizontal routing resources.
- Block SelectRAM+ memory modules provide large 18 Kb storage elements of True Dual-Port RAM.
- Embedded multiplier blocks are 18-bit x 18-bit dedicated multipliers.
- Digital Clock Manager (DCM) blocks provide self-calibrating, fully digital solutions for clock distribution delay compensation, clock multiplication and division, and coarse- and fine-grained clock phase shifting.

A new generation of programmable routing resources called Active Interconnect Technology interconnects all these elements. The general routing matrix (GRM) is an array of routing switches. Each programmable element is tied to a switch matrix, allowing multiple connections to the general routing matrix. The overall programmable interconnection is hierarchical and supports high-speed designs.

All programmable elements, including the routing resources, are controlled by values stored in static memory cells. These values are loaded in the memory cells during configuration and can be reloaded to change the functions of the programmable elements.

Features

This section briefly describes Virtex-II Pro / Virtex-II Pro X features. For more details, refer to Virtex-II Pro and Virtex-II Pro X Platform FPGAs: Functional Description.

RocketIO / RocketIO X MGT Cores

The RocketIO and RocketIO X Multi-Gigabit Transceivers are flexible parallel-to-serial and serial-to-parallel embedded transceiver cores used for high-bandwidth interconnection between buses, backplanes, or other subsystems.

Multiple user instantiations in an FPGA are possible, providing up to 100 Gb/s (RocketIO) or 170 Gb/s (RocketIO X) of full-duplex raw data transfer. Each channel can be operated at a maximum data transfer rate of 3.125 Gb/s (RocketIO) or 6.25 Gb/s (RocketIO X).

Each RocketIO or RocketIO X core implements the following technology:

- Serializer and deserializer (SERDES)
- Monolithic clock synthesis and clock recovery (CDR)
- 10 Gigabit Attachment Unit Interface (XAUI) Fibre Channel (3.1875 Gb/s XAUI), Infiniband, PCI Express, Aurora, SXI-5 (SFI-5,/SPI-5), and OC-48 compatibility(1)
- 8/16/32-bit (RocketIO) or 8/16/32/64-bit (RocketIO X) selectable FPGA interface
- 8B/10B (RocketIO) or 8B/10B and 64B/66B (RocketIO X) encoder and decoder with bypassing option on each channel
- Channel bonding support (two to twenty channels)
  - Elastic buffers for inter-chip deskewing and channel-to-channel alignment
- Receiver clock recovery tolerance of up to 75 non-transitioning bits
- 50Ω (RocketIO X) or 50Ω /75Ω selectable (RocketIO) on-chip transmit and receive terminations
- Programmable comma detection and word alignment
- Rate matching via insertion/deletion characters
- Automatic lock-to-reference function
- Programmable pre-emphasis support
- Per-channel serial and parallel transmitter-to-receiver internal loopback modes
- Optional transmit and receive data inversion
- Cyclic Redundancy Check support (RocketIO only)

PowerPC 405 Processor Block

The PPC405 RISC CPU can execute instructions at a sustained rate of one instruction per cycle. On-chip instruction and data cache reduce design complexity and improve system throughput.

The PPC405 features include:

- PowerPC RISC CPU
  - Implements the PowerPC User Instruction Set Architecture (UISA) and extensions for embedded applications
  - Thirty-two 32-bit general purpose registers (GPRs)
  - Static branch prediction
  - Five-stage pipeline with single-cycle execution of most instructions, including loads/stores
  - Unaligned and aligned load/store support to cache, main memory, and on-chip memory
  - Hardware multiply/divide for faster integer arithmetic (4-cycle multiply, 35-cycle divide)
  - Enhanced string and multiple-word handling
  - Big/little endian operation support
- Storage Control
  - Separate instruction and data cache units, both two-way set-associative and non-blocking
  - Eight words (32 bytes) per cache line
  - 16 KB array Instruction Cache Unit (ICU), 16 KB array Data Cache Unit (DCU)
  - Operand forwarding during instruction cache line fill
  - Copy-back or write-through DCU strategy
  - Doubleword instruction fetch from cache improves branch latency
- Virtual mode memory management unit (MMU)
  - Translation of the 4 GB logical address space into physical addresses
  - Software control of page replacement strategy
  - Supports multiple simultaneous page sizes ranging from 1 KB to 16 MB
- OCM controllers provide dedicated interfaces between Block SelectRAM+ memory and processor block instruction and data paths for high-speed access
- PowerPC timer facilities
  - 64-bit time base
  - Programmable interval timer (PIT)
  - Fixed interval timer (FIT)
  - Watchdog timer (WDT)
- Debug Support
  - Internal debug mode
  - External debug mode
  - Debug Wait mode
  - Real Time Trace debug mode
  - Enhanced debug support with logical operators
  - Instruction trace and trace-back support
  - Forward or backward trace
- Two hardware interrupt levels support
- Advanced power management support

Input/Output Blocks (IOBs)

IOBs are programmable and can be categorized as follows:

- Input block with an optional single data rate (SDR) or double data rate (DDR) register
- Output block with an optional SDR or DDR register and an optional 3-state buffer to be driven directly or through an SDR or DDR register
- Bidirectional block (any combination of input and output configurations)

These registers are either edge-triggered D-type flip-flops or level-sensitive latches.

IOBs support the following single-ended I/O standards:

- LVTTL, LVCMOS (3.3V,(2) 2.5V, 1.8V, and 1.5V)
- PCI-X compatible (133 MHz and 66 MHz) at 3.3V(3)
- PCI compliant (66 MHz and 33 MHz) at 3.3V(3)
- GTL and GTLP

1. Refer to Table 4, Module 2 for detailed information about RocketIO and RocketIO X transceiver compatible protocols.
2. Refer to **XAPP659** for more information.
3. Refer to **XAPP653** for more information.

- HSTL (1.5V and 1.8V, Class I, II, III, and IV)
- SSTL (1.8V and 2.5V, Class I and II)

The DCI I/O feature automatically provides on-chip termination for each single-ended I/O standard.

The IOB elements also support the following differential signaling I/O standards:

- LVDS and Extended LVDS (2.5V)
- BLVDS (Bus LVDS)
- ULVDS
- LDT
- LVPECL (2.5V)

Two adjacent pads are used for each differential pair. Two or four IOBs connect to one switch matrix to access the routing resources. On-chip differential termination is available for LVDS, LVDS Extended, ULVDS, and LDT standards.

Configurable Logic Blocks (CLBs)

CLB resources include four slices and two 3-state buffers. Each slice is equivalent and contains:

- Two function generators (F & G)
- Two storage elements
- Arithmetic logic gates
- Large multiplexers
- Wide function capability
- Fast carry look-ahead chain
- Horizontal cascade chain (OR gate)

The function generators F & G are configurable as 4-input look-up tables (LUTs), as 16-bit shift registers, or as 16-bit distributed SelectRAM+ memory.

In addition, the two storage elements are either edge-triggered D-type flip-flops or level-sensitive latches.

Each CLB has internal fast interconnect and connects to a switch matrix to access general routing resources.

Block SelectRAM+ Memory

The block SelectRAM+ memory resources are 18 Kb of True Dual-Port RAM, programmable from 16K x 1 bit to 512 x 36 bit, in various depth and width configurations. Each port is totally synchronous and independent, offering three "read-during-write" modes. Block SelectRAM+ memory is cascadable to implement large embedded storage blocks. Supported memory configurations for dual-port and single-port modes are shown in Table 2.

Table 2: **Dual-Port and Single-Port Configurations**

16K x 1 bit	4K x 4 bits	1K x 18 bits
8K x 2 bits	2K x 9 bits	512 x 36 bits

18 X 18 Bit Multipliers

A multiplier block is associated with each SelectRAM+ memory block. The multiplier block is a dedicated 18 x 18-bit 2s complement signed multiplier, and is optimized for operations based on the block SelectRAM+ content on one port. The 18 x 18 multiplier can be used independently of the block SelectRAM+ resource. Read/multiply/accumulate operations and DSP filter structures are extremely efficient.

Both the SelectRAM+ memory and the multiplier resource are connected to four switch matrices to access the general routing resources.

Global Clocking

The DCM and global clock multiplexer buffers provide a complete solution for designing high-speed clock schemes.

Up to twelve DCM blocks are available. To generate deskewed internal or external clocks, each DCM can be used to eliminate clock distribution delay. The DCM also provides 90-, 180-, and 270-degree phase-shifted versions of its output clocks. Fine-grained phase shifting offers high-resolution phase adjustments in increments of $^{1}/_{256}$ of the clock period. Very flexible frequency synthesis provides a clock output frequency equal to a fractional or integer multiple of the input clock frequency. For exact timing parameters, see Virtex-II Pro and Virtex-II Pro X Platform FPGAs: DC and Switching Characteristics.

Virtex-II Pro devices have 16 global clock MUX buffers, with up to eight clock nets per quadrant. Each clock MUX buffer can select one of the two clock inputs and switch glitch-free from one clock to the other. Each DCM can send up to four of its clock outputs to global clock buffers on the same edge. Any global clock pin can drive any DCM on the same edge.

Routing Resources

The IOB, CLB, block SelectRAM+, multiplier, and DCM elements all use the same interconnect scheme and the same access to the global routing matrix. Timing models are shared, greatly improving the predictability of the performance of high-speed designs.

There are a total of 16 global clock lines, with eight available per quadrant. In addition, 24 vertical and horizontal long lines per row or column, as well as massive secondary and local routing resources, provide fast interconnect. Virtex-II Pro buffered interconnects are relatively unaffected by net fanout, and the interconnect layout is designed to minimize crosstalk.

Horizontal and vertical routing resources for each row or column include:

- 24 long lines
- 120 hex lines
- 40 double lines
- 16 direct connect lines (total in all four directions)

Boundary Scan

Boundary-scan instructions and associated data registers support a standard methodology for accessing and configuring Virtex-II Pro devices, complying with IEEE standards 1149.1 and 1532. A system mode and a test mode are

implemented. In system mode, a Virtex-II Pro device will continue to function while executing non-test Boundary-Scan instructions. In test mode, Boundary-Scan test instructions control the I/O pins for testing purposes. The Virtex-II Pro Test Access Port (TAP) supports BYPASS, PRELOAD, SAMPLE, IDCODE, and USERCODE non-test instructions. The EXTEST, INTEST, and HIGHZ test instructions are also supported.

Configuration

Virtex-II Pro / Virtex-II Pro devices are configured by loading the bitstream into internal configuration memory using one of the following modes:

- Slave-serial mode
- Master-serial mode
- Slave SelectMAP mode
- Master SelectMAP mode
- Boundary-Scan mode (IEEE 1532)

A Data Encryption Standard (DES) decryptor is available on-chip to secure the bitstreams. One or two triple-DES key sets can be used to optionally encrypt the configuration data.

The Xilinx System Advanced Configuration Enviornment (System ACE) family offers high-capacity and flexible solution for FPGA configuration as well as program/data storage for the processor. See **DS080**, *System ACE CompactFlash Solution* for more information.

Readback and Integrated Logic Analyzer

Configuration data stored in Virtex-II Pro / Virtex-II Pro configuration memory can be read back for verification. Along with the configuration data, the contents of all flip-flops and latches, distributed SelectRAM+, and block SelectRAM+ memory resources can be read back. This capability is useful for real-time debugging.

The Xilinx ChipScope Integrated Logic Analyzer (ILA) cores and Integrated Bus Analyzer (IBA) cores, along with the ChipScope Pro Analyzer software, provide a complete solution for accessing and verifying user designs within Virtex-II Pro devices.

IP Core and Reference Support

Intellectual Property is part of the Platform FPGA solution. In addition to the existing FPGA fabric cores, the list below shows some of the currently available hardware and software intellectual properties specially developed for Virtex-II Pro / Virtex-II Pro X by Xilinx. Each IP core is modular, portable, Real-Time Operating System (RTOS) independent, and CoreConnect compatible for ease of design migration. Refer to **www.xilinx.com/ipcenter** for the latest and most complete list of cores.

Hardware Cores

- Bus Infrastructure cores (arbiters, bridges, and more)
- Memory cores (DDR, Flash, and more)
- Peripheral cores (UART, IIC, and more)
- Networking cores (ATM, Ethernet, and more)

Software Cores

- Boot code
- Test code
- Device drivers
- Protocol stacks
- RTOS integration
- Customized board support package

Virtex-II Pro / Virtex-II Pro X Device/Package Combinations and Maximum I/Os

Offerings include ball grid array (BGA) packages with 1.0 mm pitch. In addition to traditional wire-bond interconnect (FG/FGG packages), flip-chip interconnect (FF packages) is used in some of the BGA offerings. Flip-chip interconnect construction supports more I/Os than are possible in wire-bond versions of similar packages, providing a high pin count and excellent power dissipation.

The device/package combination table (Table 3) details the maximum number of user I/Os and RocketIO / RocketIO X MGTs for each device and package using wire-bond or flip-chip technology.

The FF1148 and FF1696 packages have no RocketIO transceivers bonded out. Extra SelectIO-Ultra resources occupy available pins in these packages, resulting in a higher user I/O count. These packages are available for the XC2VP40, XC2VP50, and XC2VP100 devices only.

The I/Os per package count includes all user I/Os except the 15 control pins (CCLK, DONE, M0, M1, M2, PROG_B, PWRDWN_B, TCK, TDI, TDO, TMS, HSWAP_EN, DXN, DXP, and RSVD), VBATT, and the RocketIO / RocketIO X transceiver pins.

Table 3: **Virtex-II Pro Device/Package Combinations and Maximum Number of Available I/Os**

Package(1)	FG256/ FGG256	FG456/ FGG456	FG676	FF672	FF896	FF1152	FF1148	FF1517	FF1704	FF1696
Pitch (mm)	**1.00**	**1.00**	**1.00**	**1.00**	**1.00**	**1.00**	**1.00**	**1.00**	**1.00**	**1.00**
Size (mm)	**17 x 17**	**23 x 23**	**26 x 26**	**27 x 27**	**31 x 31**	**35 x 35**	**35 x 35**	**40 x 40**	**42.5 x 42.5**	**42.5 x 42.5**
XC2VP2	140 / 4	156 / 4		204 / 4						
XC2VP4	140 / 4	248 / 4		348 / 4						
XC2VP7		248 / 8		396 / 8	396 / 8					
XC2VP20			404 / 8		556 / 8	564 / 8				
XC2VPX20					552 / 8(2)					
XC2VP30			416 / 8		556 / 8	644 / 8				
XC2VP40			416 / 8			692 / 12	804 / 0(3)			
XC2VP50						692 / 16	812 / 0(3)	852 / 16		
XC2VP70								964 / 16	996 / 20	
XC2VPX70									992 / 20(2)	
XC2VP100									1,040 / 20	1,164 / 0(3)

Notes:
1. Wirebond packages FG256, FG456, and FG676 are also available in Pb-free versions FGG256, FGG456, and FGG676. See Virtex-II Pro Ordering Examples for details on how to order.
2. Virtex-II Pro X device is equipped with RocketIO X transceiver cores.
3. The RocketIO transceivers in devices in the FF1148 and FF1696 packages are not bonded out to the package pins.

Maximum Performance

Maximum performance of the RocketIO / RocketIO X transceiver and the PowerPC processor block varies, depending on package style and speed grade. See Table 4 for details. Virtex-II Pro and Virtex-II Pro X Platform FPGAs: DC and Switching Characteristics contains the rest of the FPGA fabric performance parameters.

Table 4: **Maximum RocketIO / RocketIO X Transceiver and Processor Block Performance**

Device	Speed Grade			Units
	-7(1)	-6	-5	
RocketIO X Transceiver FlipChip (FF)	N/A	6.25(3)	4.25(3)	Gb/s
RocketIO Transceiver FlipChip (FF)	3.125	3.125	2.0	Gb/s
RocketIO Transceiver Wirebond (FG)	2.5	2.5	2.0	Gb/s
PowerPC Processor Block	400(2)	350(2)	300	MHz

Notes:
1. -7 speed grade devices are not available in Industrial grade.
2. **IMPORTANT!** When CPMC405CLOCK runs at speeds greater than 350 MHz in -7 Commercial grade dual-processor devices, or greater than 300 MHz in -6 Industrial grade dual-processor devices, users must implement the technology presented in **XAPP755**, "PowerPC 405 Clock Macro for -7(C) and -6(I) Speed Grade Dual-Processor Devices." Refer to Table 1 to identify dual-processor devices.
3. XC2VPX70 is only available at fixed 4.25 Gb/s baud rate.

Virtex-II Pro Ordering Examples

Virtex-II Pro ordering examples are shown in Figure 1 (flip-chip package) and Figure 2 (Pb-free wire-bond package).

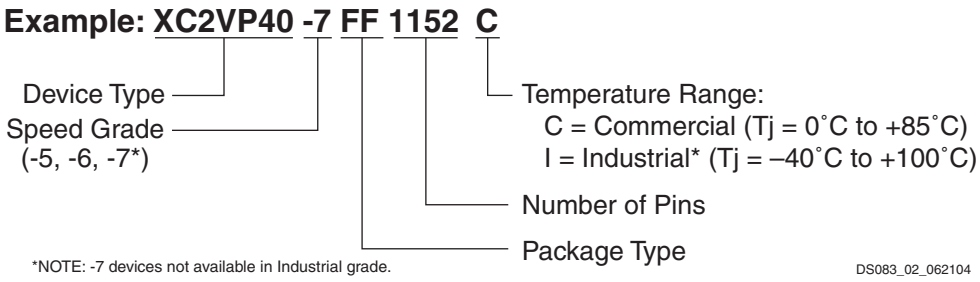

Figure 1: **Virtex-II Pro Ordering Example, Flip-Chip Package**

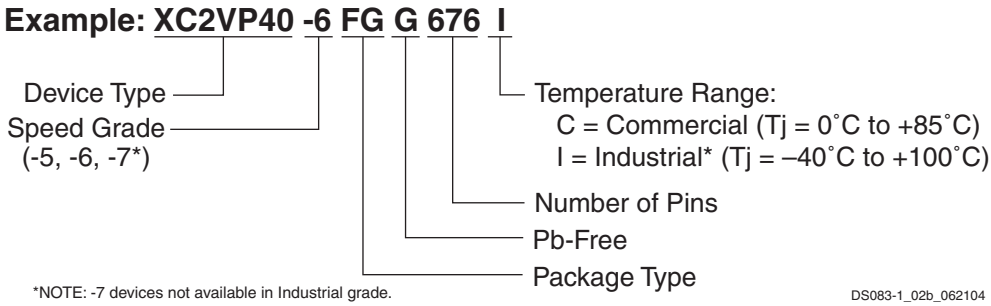

Figure 2: **Virtex-II Pro Ordering Example, Pb-Free Wire-Bond Package**

Virtex-II Pro X Ordering Example

A Virtex-II Pro X ordering example is shown in Figure 3.

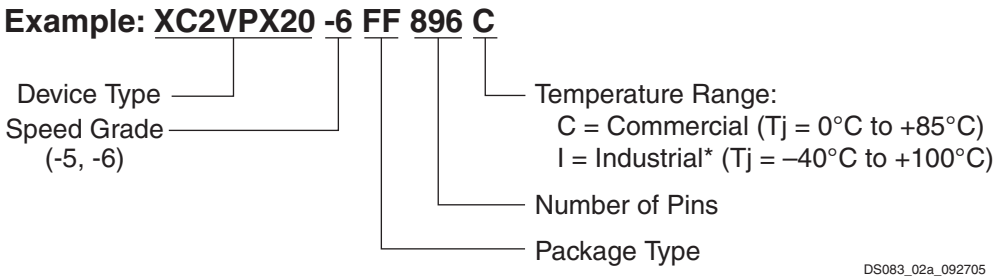

Figure 3: **Virtex-II Pro X Ordering Example, Flip-Chip Package**

Revision History

This section records the change history for this module of the data sheet.

Date	Version	Revision
01/31/02	1.0	Initial Xilinx release.
06/13/02	2.0	New Virtex-II Pro family members. New timing parameters per speedsfile **v1.62**.
09/03/02	2.1	Updates to Table 1 and Table 3. Processor Block information added to Table 4.
09/27/02	2.2	In Table 1, correct max number of XC2VP30 I/Os to 644.
11/20/02	2.3	Add bullet items for 3.3V I/O features.
01/20/03	2.4	• In Table 3, add FG676 package option for XC2VP20, XC2VP30, and XC2VP40. • Remove FF1517 package option for XC2VP40.
03/24/03	2.4.1	• Correct number of single-ended I/O standards from 19 to 22. • Correct minimum RocketIO serial speed from 622 Mbps to 600 Mbps.
08/25/03	2.4.2	• Add footnote referring to XAPP659 to callout for 3.3V I/O standards on page 4.
12/10/03	3.0	• XC2VP2 through XC2VP70 speed grades -5, -6, and -7, and XC2VP100 speed grades -5 and -6, are released to **Production status**.
02/19/04	3.1	• Table 1: Corrected number of RocketIO transceiver blocks for XC2VP40. • Section Virtex-II Pro Platform FPGA Technology (All Devices): Updated number of differential standards supported from six to ten. • Section Input/Output Blocks (IOBs): Added text stating that differential termination is available for LVDS, LVDS Extended, ULVDS, and LDT standards. • Figure 1: Added note stating that -7 devices are not available in Industrial grade.
03/09/04	3.1.1	• Recompiled for backward compatibility with Acrobat 4 and above. No content changes.
06/30/04	4.0	Merged in DS110-1 (Module 1 of Virtex-II Pro X data sheet). Added information on available Pb-free packages.
11/17/04	4.1	*No changes in Module 1 for this revision.*
03/01/05	4.2	Table 3: Corrected number of RocketIO transceivers for XC2VP7-FG456.
06/20/05	4.3	*No changes in Module 1 for this revision.*
09/15/05	4.4	• Changed all instances of 10.3125 Gb/s (RocketIO transceiver maximum bit rate) to 6.25 Gb/s. • Changed all instances of 412.5 Gb/s (RocketIO X transceiver maximum multi-channel raw data transfer rate) to 250 Gb/s.
10/10/05	4.5	• Changed XC2VPX70 variable baud rate specification to fixed-rate operation at 4.25 Gb/s. • Changed maximum performance for -7 Virtex-II Pro X MGT (Table 4) to N/A.
03/05/07	4.6	*No changes in Module 1 for this revision.*
11/05/07	4.7	Updated copyright notice and legal disclaimer.
06/21/11	5.0	Added *Product Not Recommended for New Designs* banner.

XC2VP2-6FF672C Xilinx Inc. IC FPGA 204 I/O 672FCBGA

Notice of Disclaimer

THE XILINX HARDWARE FPGA AND CPLD DEVICES REFERRED TO HEREIN (“PRODUCTS”) ARE SUBJECT TO THE TERMS AND CONDITIONS OF THE XILINX LIMITED WARRANTY WHICH CAN BE VIEWED AT http://www.xilinx.com/warranty.htm. THIS LIMITED WARRANTY DOES NOT EXTEND TO ANY USE OF PRODUCTS IN AN APPLICATION OR ENVIRONMENT THAT IS NOT WITHIN THE SPECIFICATIONS STATED IN THE XILINX DATA SHEET. ALL SPECIFICATIONS ARE SUBJECT TO CHANGE WITHOUT NOTICE. PRODUCTS ARE NOT DESIGNED OR INTENDED TO BE FAIL-SAFE OR FOR USE IN ANY APPLICATION REQUIRING FAIL-SAFE PERFORMANCE, SUCH AS LIFE-SUPPORT OR SAFETY DEVICES OR SYSTEMS, OR ANY OTHER APPLICATION THAT INVOKES THE POTENTIAL RISKS OF DEATH, PERSONAL INJURY, OR PROPERTY OR ENVIRONMENTAL DAMAGE (“CRITICAL APPLICATIONS”). USE OF PRODUCTS IN CRITICAL APPLICATIONS IS AT THE SOLE RISK OF CUSTOMER, SUBJECT TO APPLICABLE LAWS AND REGULATIONS.

Virtex-II Pro Data Sheet

The Virtex-II Pro Data Sheet contains the following modules:

- Virtex-II Pro and Virtex-II Pro X Platform FPGAs: Introduction and Overview (Module 1)
- Virtex-II Pro and Virtex-II Pro X Platform FPGAs: Functional Description (Module 2)
- Virtex-II Pro and Virtex-II Pro X Platform FPGAs: DC and Switching Characteristics (Module 3)
- Virtex-II Pro and Virtex-II Pro X Platform FPGAs: Pinout Information (Module 4)

Virtex-II Pro and Virtex-II Pro X Platform FPGAs: Functional Description

DS083 (v5.0) June 21, 2011 **Product Specification**

Virtex-II Pro[1] Array Functional Description

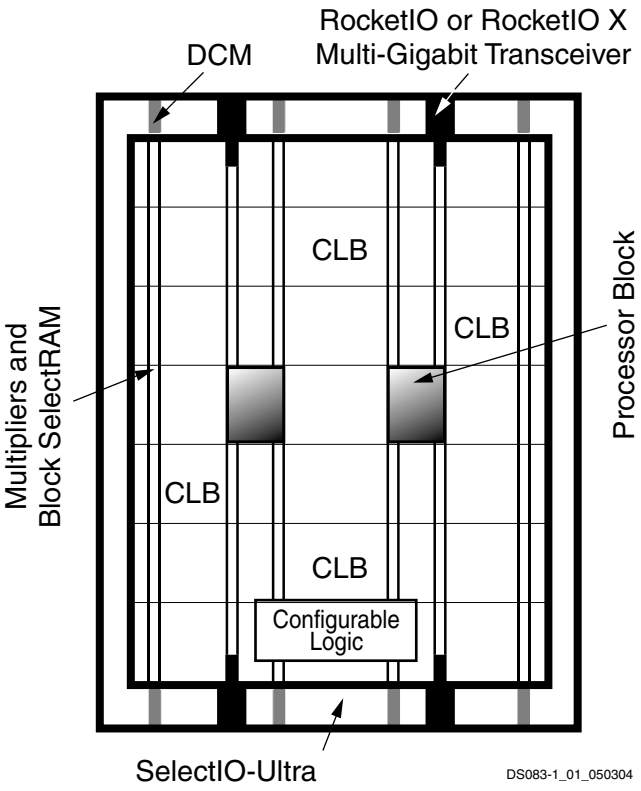

Figure 1: **Virtex-II Pro Generic Architecture Overview**

This module describes the following Virtex™-II Pro functional components, as shown in Figure 1:

- Embedded RocketIO™ (up to 3.125 Gb/s) or RocketIO X (up to 6.25 Gb/s) Multi-Gigabit Transceivers (MGTs)
- Processor blocks with embedded IBM PowerPC™ 405 RISC CPU core (PPC405) and integration circuitry.
- FPGA fabric based on Virtex-II architecture.

Virtex-II Pro User Guides

Virtex-II Pro User Guides cover theory of operation in more detail, and include implementation details, primitives and attributes, command/instruction sets, and many HDL code examples where appropriate. All parameter specifications are given only in Module 3 of this Data Sheet.

These User Guides are available:

- For detailed descriptions of PPC405 embedded core programming models and internal core operations, see **PowerPC Processor Reference Guide** and **PowerPC 405 Processor Block Reference Guide**.
- For detailed RocketIO transceiver digital/analog design considerations, see **RocketIO Transceiver User Guide**.
- For detailed RocketIO X transceiver digital/analog design considerations, see **RocketIO X Transceiver User Guide**,
- For detailed descriptions of the FPGA fabric (CLB, IOB, DCM, etc.), see **Virtex-II Pro Platform FPGA User Guide**.

All of the documents above, as well as a complete listing and description of Xilinx-developed Intellectual Property cores for Virtex-II Pro, are available on the Xilinx website.

Contents of This Module

- Functional Description: RocketIO X Multi-Gigabit Transceiver (MGT)
- Functional Description: RocketIO Multi-Gigabit Transceiver (MGT)
- Functional Description: Processor Block
- Functional Description: Embedded PowerPC 405 Core
- Functional Description: FPGA
- Revision History

Virtex-II Pro Compared to Virtex-II Devices

Virtex-II Pro devices are built on the Virtex-II FPGA architecture. Most FPGA features are identical to Virtex-II devices. Major differences are described below:

- The Virtex-II Pro FPGA family is the first to incorporate embedded PPC405 and RocketIO/RocketIO X cores.
- V_{CCAUX}, the auxiliary supply voltage, is 2.5V instead of 3.3V as for Virtex-II devices. Advanced processing at 0.13 µm has resulted in a smaller die, faster speed, and lower power consumption.
- Virtex-II Pro devices are neither bitstream-compatible nor pin-compatible with Virtex-II devices. However, Virtex-II designs can be compiled into Virtex-II Pro devices.
- On-chip input LVDS differential termination is available.
- SSTL3, AGP-2X/AGP, LVPECL_33, LVDS_33, and LVDSEXT_33 standards are not supported.
- The open-drain output pin TDO does not have an internal pull-up resistor.

1. Unless otherwise noted, "Virtex-II Pro" refers to members of the Virtex-II Pro and/or Virtex-II Pro X families.

© 2000–2011 Xilinx, Inc. All rights reserved. XILINX, the Xilinx logo, the Brand Window, and other designated brands included herein are trademarks of Xilinx, Inc. PowerPC is a trademark of IBM Corp. and is used under license. All other trademarks are the property of their respective owners.

Functional Description: RocketIO X Multi-Gigabit Transceiver (MGT)

This section summarizes the features of the RocketIO X multi-gigabit transceiver. For an in-depth discussion of the RocketIO X MGT, including digital and analog design considerations, refer to the **RocketIO X Transceiver User Guide.**

RocketIO X Overview

Either eight or twenty RocketIO X MGTs are available on the XC2VPX20 and XC2VPX70 devices, respectively. The XC2VPX20 MGT is designed to operate at any baud rate in the range of 2.488 Gb/s to 6.25 Gb/s per channel. This includes specific baud rates used by various standards as listed in Table 1. The XC2VPX70 MGT operates at a fixed 4.25 Gb/s per channel.

The RocketIO X MGT consists of the *Physical Media Attachment* (PMA) and *Physical Coding Sublayer* (PCS). The PMA contains the 6.25 Gb/s serializer/deserializer (SERDES), TX/RX buffers, clock generator, and clock recovery circuitry. The RocketIO X PCS has been significantly updated relative to the RocketIO PCS. In addition to the existing RocketIO PCS features, the RocketIO X PCS features 64B/66B encoder/decoder/scrambler/descrambler and SONET compatibility.

See Table 7, page 17, for a summary of the differences between the RocketIO X PMA/PCS and the RocketIO PMA/PCS.

Figure 4, page 3 shows a high-level block diagram of the RocketIO X transceiver and its FPGA interface signals.

Table 1: **Communications Standards Supported by RocketIO X Transceiver**(2)

Mode	Channels (Lanes)(1)	I/O Bit Rate (Gb/s)
SONET OC-48	1	2.488
PCI Express	1, 2, 4, 8, 16	2.5
Infiniband	1, 4, 12	2.5
XAUI (10-Gb Ethernet)	4	3.125
XAUI (10-Gb Fibre Channel)	4	3.1875
Aurora (Xilinx protocol)	1, 2, 3, 4,...	2.488 to 6.25
Custom Mode	1, 2, 3, 4,...	2.488 to 6.25

Notes:
1. One channel is considered to be one transceiver.
2. XC2VPX70 operates at a fixed 4.25 Gb/s baud rate.

PMA

Transmitter Output

The RocketIO X transceiver is implemented in *Current Mode Logic* (CML). A CML transmitter output consists of transistors configured as shown in Figure 2. CML uses a positive supply and offers easy interface requirements. In this configuration, both legs of the driver, VP and VN, sink current, with one leg always sinking more current than its complement. The CML output consists of a differential pair with 50Ω source resistors. The signal swing is created by switching the current in a common-source differential pair.

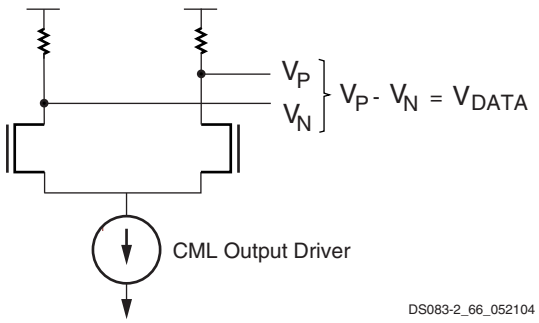

Figure 2: **CML Output Configuration**

Transmitter Termination

On-chip termination is provided at the transmitter, eliminating the need for external termination. The output driver and termination are powered by V_{TTX} at 1.5V. This configuration uses a CML approach with 50Ω termination to TXP and TXN as shown in Figure 3.

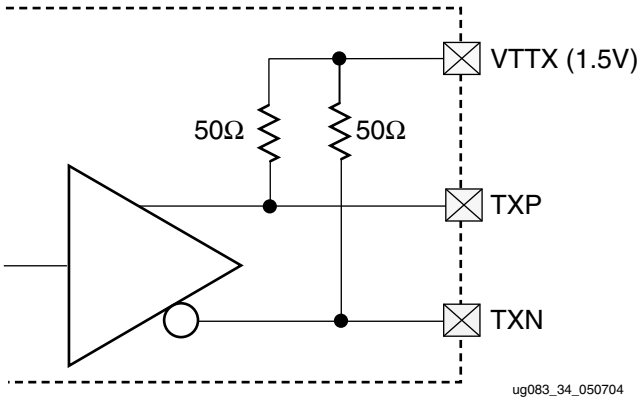

Figure 3: **RocketIO X Transmit Termination**

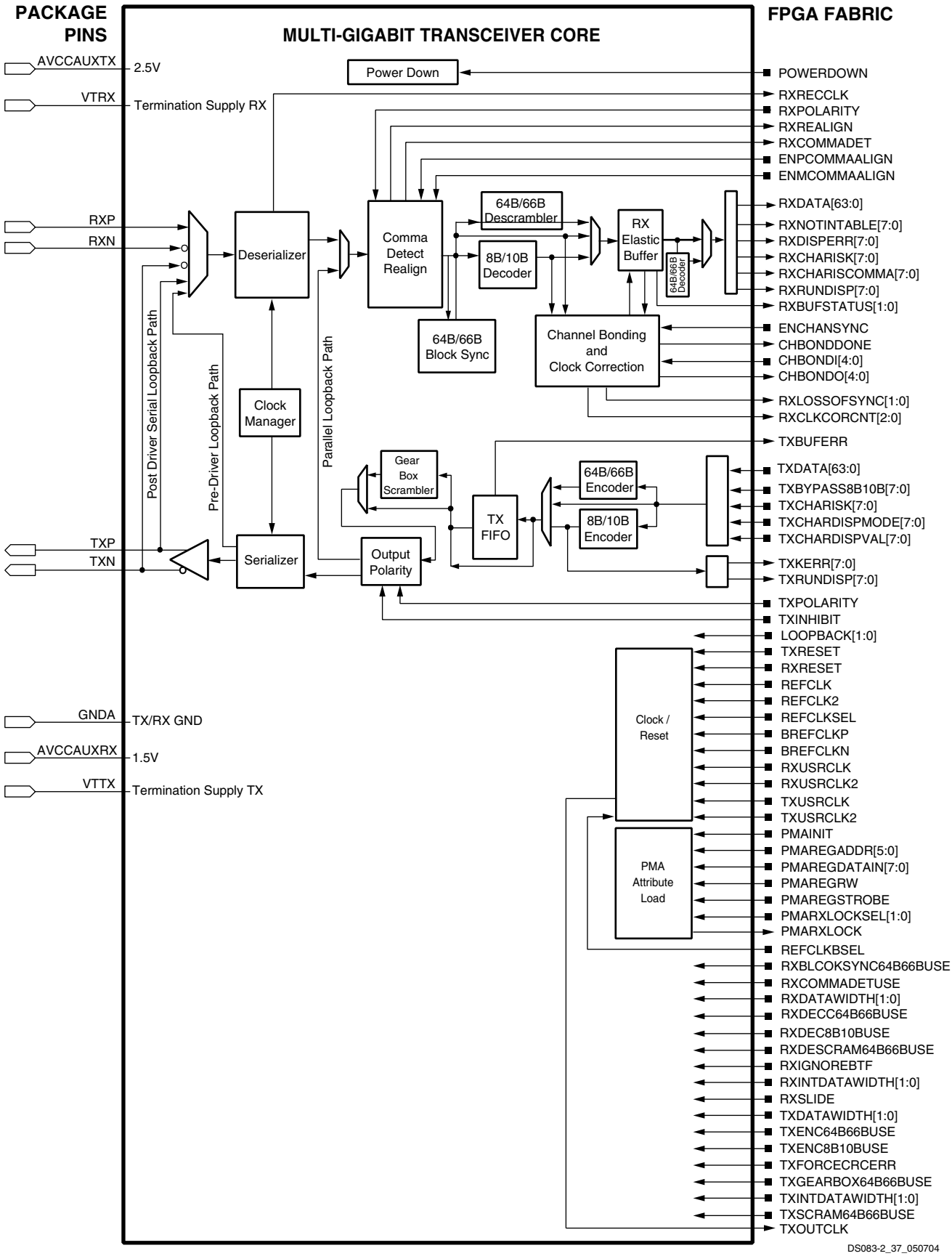

Figure 4: **RocketIO X Transceiver Block Diagram**

Output Swing and Emphasis

The output swing and emphasis levels are fully programmable. Each is controlled via attributes at configuration, and can be modified via the PMA attribute programming bus.

The programmable output swing control can adjust the differential peak-to-peak output level between 200 mV and 1600 mV.

With emphasis, the differential voltage swing is boosted to create a stronger rising or falling waveform. This method compensates for high frequency loss in the transmission media that would otherwise limit the magnitude of this waveform. Lossy transmission lines cause the dissipation of electrical energy. This emphasis technique extends the distance that signals can be driven down lossy line media and increases the signal-to-noise ratio at the receiver.

Emphasis can be described from two perspectives, additive to the smaller voltage (V_{SM}) (pre-emphasis) or subtractive from the larger voltage (V_{LG}) (de-emphasis). The resulting benefits in compensating for channel loss are identical. It is simply a relative way of specifying the effect at the transmitter.

The equations for calculating pre-emphasis as a percentage and dB are as follows:

$$\text{Pre-Emphasis}_{\%} = ((V_{LG}-V_{SM}) / V_{SM}) \times 100$$
$$\text{Pre-Emphasis}_{dB} = 20 \log(V_{LG}/V_{SM})$$

The equations for calculating de-emphasis as a percentage and dB are as follows:

$$\text{De-Emphasis}_{\%} = (V_{LG} - V_{SM}) / V_{LG}) \times 100$$
$$\text{De-Emphasis}_{dB} = 20 \log(V_{SM}/V_{LG})$$

The pre-emphasis amount can be programmed in discrete steps between 0% and 500%. The de-emphasis amount can be programmed in discrete steps between 0% and 83%.

Serializer

The serializer multiplies the reference frequency provided on REFCLK by 10, 16, 20, 32, or 40, depending on the operation mode. The multiplication of the clock is achieved by using an embedded PLL.

Data is converted from parallel to serial format and transmitted on the TXP and TXN differential outputs. The electrical connection of TXP and TXN can be interchanged through configuration. This option can be controlled by an input (TXPOLARITY) at the FPGA transmitter interface.

Deserializer

Synchronous serial data reception is facilitated by a clock and data recovery (CDR) circuit. This circuit uses a fully monolithic Phase Lock Loop (PLL), which does not require any external components. The CDR circuit extracts both phase and frequency from the incoming data stream.

The derived clock, RXRECCLK, is generated and locked to as long as it remains within the specified component range. This clock is presented to the FPGA fabric at $^1/_{10}$, $^1/_{16}$, $^1/_{20}$, $^1/_{32}$, or $^1/_{40}$ the incoming data rate depending on the operating mode.

A sufficient number of transitions must be present in the data stream for CDR to work properly. The CDR circuit is guaranteed to work with 8B/10B and 64B/66B encoding. Further, CDR requires approximately 5,000 transitions upon power-up to guarantee locking to the incoming data rate. Once lock is achieved, up to 75 missing transitions can be tolerated before lock to the incoming data stream is lost.

Another feature of CDR is its ability to accept an external precision reference clock, REFCLK, which either acts to clock incoming data or to assist in synchronizing the derived RXRECCLK.

For further clarity, the TXUSRCLK is used to clock data from the FPGA fabric to the TX FIFO. The FIFO depth accounts for the slight phase difference between these two clocks. If the clocks are locked in frequency, then the FIFO acts much like a pass-through buffer.

The receiver can be configured to reverse the RXP and RXN inputs. This can be useful in the event that printed circuit board traces have been reversed.

Receiver Lock Control

The CDR circuits will lock to the reference clock automatically if the data is not present. For proper operation, the frequency of the reference clock must be within ±100 ppm of the nominal frequency.

During normal operation, the receiver PLL automatically locks to incoming data (when present) or to the local reference clock (when data is not present). This is the default configuration for all primitives. This function can be overridden via the PMARXLOCKSEL port

When receive PLL lock is forced to the local reference, phase information from the incoming data stream is ignored. Data continues to be sampled, but synchronous to the local reference rather than relative to edges in the data stream.

Receive Equalization

In addition to transmit emphasis, the RocketIO X MGT provides a programmable active receive equalization feature to further compensate the effects of channel attenuation at high frequencies.

By adjusting RXFER, the right amount of equalization can be added to reverse the signal degradation caused by a printed circuit board, a backplane, or a line/switch card. RXFER can be set through software configuration or the PMA Attribute Bus.

Receiver Termination

On-chip termination is provided at the receiver, eliminating the need for external termination. The receiver termination supply (V_{TRX}) is the center tap of differential termination to

RXP and RXN as shown in Figure 5. This supports multiple termination styles, including high-side, low-side, and differential (floating or active). This configuration supports receiver termination compatible to Virtex-II Pro devices, using a CML (high-side) termination to an active supply of 1.8V – 2.5V. For DC coupling of two Virtex-II Pro X devices, a 1.5V CML termination for VTRX is recommended.

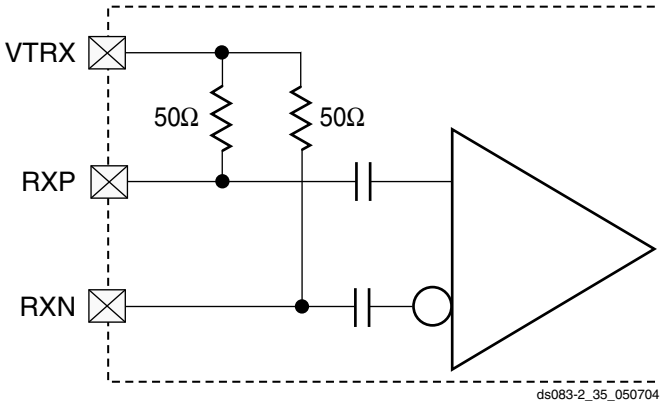

Figure 5: **RocketIO X Receive Termination**

PCS

Fabric Data Interface

Internally, the PCS operates in either 2-byte mode (16/20 bits) or 4-byte mode (32/40 bits). When in 2-byte mode, the FPGA fabric interface can either be 1, 2, or 4 bytes wide. When in 4-byte mode, the FPGA fabric interface can either be 4 or 8 bytes wide. When accompanied by the predefined modes of the PMA, the user thus has a large combination of protocols and data rates from which to choose.

USRCLK2 clocks data on the fabric side, while USRCLK clocks data on the PCS side. This creates distinct USRCLK/USRCLK2 frequency ratios for different combinations of fabric and internal data widths. Table 2 summarizes the USRCLK2-to-USRCLK ratios for the different possible combinations of data widths.

Table 2: **Clock Ratios for Various Data Widths**

Fabric Data Width	Frequency Ratio of USRCLK:USRCLK2	
	2-Byte Internal Data Width	4-Byte Internal Data Width
1 byte	1:2 (1)	N/A
2 byte	1:1	N/A
4 byte	2:1 (1)	1:1
8 byte	N/A	2:1 (1)

Notes:
1. Each edge of slower clock must align with falling edge of faster clock.

As a general guide, use 2-byte internal data width mode when the serial speed is below 5 Gb/s, and 4-byte internal data width mode when the serial speed is greater than 5 Gb/s. In 2-byte mode, the PCS processes 4-byte data every other byte.

No fixed phase relationship is assumed between REFCLK, RXRECCLK, and/or any other clock that is not tied to either of these clocks. When RXUSRCLK and RXUSRCLK2 have different frequencies, each edge of the slower clock is aligned to a falling edge of the faster clock. The same relationships apply to TXUSRCLK and TXUSRCLK2.

FPGA Transmit Interface

The FPGA can send either one, two, or four characters of data to the transmitter. Each character can be either 8 bits or 10 bits wide. If 8-bit data is applied, the additional inputs become control signals for the 8B/10B encoder. When the 8B/10B encoder is bypassed, the 10-bit character order is generated as follows:

TXCHARDISPMODE[0] (first bit transmitted)
TXCHARDISPVAL[0]
TXDATA[7:0] (last bit transmitted is TXDATA[0])

64B/66B Encoder/Decoder

The RocketIO X PCS features a 64B/66B encoder/decoder, scrambler/descrambler, and gearbox functions that can be bypassed as needed. The encoder is compliant with IEEE 802.3ae specifications.

Scrambler/Gearbox

The bypassable scrambler operates on the read side of the transmit FIFO. The scrambler uses the following generator polynomial to scramble 64B/66B payload data:

$$G(x) = 1 + x^{39} + x^{58}$$

The scrambler works in conjunction with the gearbox, which frames 64B/66B data for the PMA. The gearbox should always be enabled when using the 64B/66B protocal.

Disparity Control

The 8B/10B encoder is initialized with a negative running disparity. Unique control allows forcing the current running disparity state.

TXRUNDISP signals its current running disparity. This may be useful in those cases where there is a need to manipulate the initial running disparity value.

Bits TXCHARDISPMODE and TXCHARDISPVAL control the generation of running disparity before each byte.

For example, the transceiver can generate the sequence

```
K28.5+ K28.5+ K28.5- K28.5-
```

or

```
K28.5- K28.5- K28.5+ K28.5+
```

by specifying inverted running disparity for the second and fourth bytes.

Transmit FIFO

Proper operation of the circuit is only possible if the FPGA clock (TXUSRCLK) is frequency-locked to the reference clock (REFCLK). Phase variations up to one clock cycle are allowable. The FIFO has a depth of four. Overflow or underflow conditions are detected and signaled at the interface. Bypassing of this FIFO is programmable.

8B/10B Encoder

Note: In the RocketIO transceiver, the most-significant byte is sent first; in the RocketIO X transceiver, the least-significant byte is sent first.

A bypassable 8B/10B encoder is included. The encoder uses the same 256 data characters and 12 control characters used by Gigabit Ethernet, Fibre Channel, and InfiniBand.

The encoder accepts 8 bits of data along with a K-character signal for a total of 9 bits per character applied, and generates a 10 bit character for transmission. If the K-character signal is High, the data is encoded into one of the twelve possible K-characters available in the 8B/10B code. If the K-character input is Low, the 8 bits are encoded as standard data. If the K-character input is High, and a user applies other than one of the twelve possible combinations, TXKERR indicates the error.

8B/10B Decoder

Note: In the RocketIO transceiver, the most-significant byte is sent first; in the RocketIO X transceiver, the least-significant byte is sent first.

An optional 8B/10B decoder is included. A programmable option allows the decoder to be bypassed. When the 8B/10B decoder is bypassed, the 10-bit character order is, for example,

RXCHARISK[0] (first bit received)
RXRUNDISP[0]
RXDATA[7:0] (last bit received is RXDATA[0])

The decoder uses the same table that is used for Gigabit Ethernet, Fibre Channel, and InfiniBand. In addition to decoding all data and K-characters, the decoder has several extra features. The decoder separately detects both “disparity errors” and “out-of-band” errors. A disparity error is the reception of 10-bit character that exists within the 8B/10B table but has an incorrect disparity. An out-of-band error is the reception of a 10-bit character that does not exist within the 8B/10B table. It is possible to obtain an out-of-band error without having a disparity error. The proper disparity is always computed for both legal and illegal characters. The current running disparity is available at the RXRUNDISP signal.

The 8B/10B decoder performs a unique operation if out-of-band data is detected. If out-of-band data is detected, the decoder signals the error and passes the illegal 10-bits through and places them on the outputs. This can be used for debugging purposes if desired.

The decoder also signals the reception of one of the 12 valid K-characters. In addition, a programmable comma detect is included. The comma detect signal registers a comma on the receipt of any comma+, comma–, or both. Since the comma is defined as a 7-bit character, this includes several out-of-band characters. Another option allows the decoder to detect only the three defined commas (K28.1, K28.5, and K28.7) as comma+, comma–, or both. In total, there are six possible options, three for valid commas and three for "any comma."

Note that all bytes (1, 2, 4, or 8) at the RX FPGA interface each have their own individual 8B/10B indicators (K-character, disparity error, out-of-band error, current running disparity, and comma detect).

Receiver Buffer

The receiver includes buffers (FIFOs) in the datapath. This section gives the reasons for including the buffers and outlines their operation.

The receiver buffer is required for two reasons:

- *Clock correction* to accommodate the slight difference in frequency between the recovered clock RXRECCLK and the internal FPGA user clock RXUSRCLK
- *Channel bonding* to allow realignment of the input stream to ensure proper alignment of data being read through multiple transceivers

The receiver uses an *elastic buffer*, where "elastic" refers to the ability to modify the read pointer for clock correction and channel bonding.

Comma Detection

Word alignment is dependent on the state of comma detect bits. If comma detect is enabled, the transceiver recognizes up to two 10-bit preprogrammed characters. Upon detection of the character or characters, the comma detect output is driven high and the data is synchronously aligned. If a comma is detected and the data is aligned, no further alignment alteration takes place. If a comma is received and realignment is necessary, the data is realigned and an indi-

cation is given at the receiver interface. The realignment indicator is a distinct output.

The transceiver continuously monitors the data for the presence of the 10-bit character(s). Upon each occurrence of a 10-bit character, the data is checked for word alignment. If comma detect is disabled, the data is not aligned to any particular pattern. The programmable option allows a user to align data on comma+, comma–, both, or a unique user-defined and programmed sequence.

Comma detection has been expanded beyond 10-bit symbol detection and alignment to include 8-bit symbol detection and alignment for 16-, 20-, 32-, and 40-bit paths. The ability to detect symbols, and then either align to 1-word, 2-word, or 4-word boundaries is included. The RXSLIDE input allows the user to “slide” or “slip” the alignment by one bit in each 16-, 20-, 32- and 40-bit mode at any time for SONET applications. Comma detection can be bypassed when needed.

Clock Correction

RXRECCLK (the recovered clock) reflects the data rate of the incoming data. RXUSRCLK defines the rate at which the FPGA fabric consumes the data. Ideally, these rates are identical. However, since the clocks typically have different sources, one of the clocks will be faster than the other. The receiver buffer accommodates this difference between the clock rates. See Figure 6.

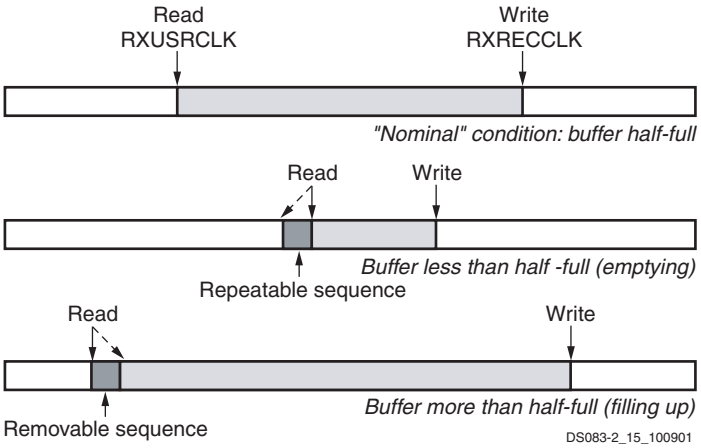

Figure 6: **Clock Correction in Receiver**

Nominally, the buffer is always half full. This is shown in the top buffer, Figure 6, where the shaded area represents buffered data not yet read. Received data is inserted via the write pointer under control of RXRECCLK. The FPGA fabric reads data via the read pointer under control of RXUSRCLK. The half full/half empty condition of the buffer gives a cushion for the differing clock rates. This operation continues indefinitely, regardless of whether or not "meaningful" data is being received. When there is no meaningful data to be received, the incoming data will consist of IDLE characters or other padding.

If RXUSRCLK is faster than RXRECCLK, the buffer becomes more empty over time. The clock correction logic corrects for this by decrementing the read pointer to reread a repeatable byte sequence. This is shown in the middle buffer, Figure 6, where the solid read pointer decrements to the value represented by the dashed pointer. By decrementing the read pointer instead of incrementing it in the usual fashion, the buffer is partially refilled. The transceiver design will repeat a single repeatable byte sequence when necessary to refill a buffer. If the byte sequence length is greater than one, and if attribute CLK_COR_REPEAT_WAIT is 0, then the transceiver may repeat the same sequence multiple times until the buffer is refilled to the desired extent.

Similarly, if RXUSRCLK is slower than RXRECCLK, the buffer will fill up over time. The clock correction logic corrects for this by incrementing the read pointer to skip over a removable byte sequence that need not appear in the final FPGA fabric byte stream. This is shown in the bottom buffer, Figure 6, where the solid read pointer increments to the value represented by the dashed pointer. This accelerates the emptying of the buffer, preventing its overflow. The transceiver design will skip a single byte sequence when necessary to partially empty a buffer. If attribute CLK_COR_REPEAT_WAIT is 0, the transceiver may also skip two consecutive removable byte sequences in one step to further empty the buffer when necessary.

These operations require the clock correction logic to recognize a byte sequence that can be freely repeated or omitted in the incoming data stream. This sequence is generally an IDLE sequence, or other sequence comprised of special values that occur in the gaps separating packets of meaningful data. These gaps are required to occur sufficiently often to facilitate the timely execution of clock correction.

Channel Bonding

Some gigabit I/O standards such as Infiniband specify the use of multiple transceivers in parallel for even higher data rates. Words of data are split into bytes, with each byte sent over a separate channel (transceiver). See Figure 7.

The top half of the figure shows the transmission of words split across four transceivers (channels or lanes). PPPP, QQQQ, RRRR, SSSS, and TTTT represent words sent over the four channels.

The bottom-left portion of Figure 7 shows the initial situation in the FPGA’s receivers at the other end of the four channels. Due to variations in transmission delay—especially if the channels are routed through repeaters—the FPGA fabric might not correctly assemble the bytes into complete words. The bottom-left illustration shows the incorrect assembly of data words PQPP, QRQQ, RSRR, and so forth.

To support correction of this misalignment, the data stream includes special byte sequences that define corresponding points in the several channels. In the bottom half of Figure 7, the shaded "P" bytes represent these special characters. Each receiver recognizes the "P" channel bond-

ing character, and remembers its location in the buffer. At some point, one transceiver designated as the master instructs all the transceivers to align to the channel bonding character "P" (or to some location relative to the channel bonding character).

After this operation, words transmitted to the FPGA fabric are properly aligned: RRRR, SSSS, TTTT, and so forth, as shown in the bottom-right portion of Figure 7. To ensure that the channels remain properly aligned following the channel bonding operation, the master transceiver must also control the clock correction operations described in the previous section for all channel-bonded transceivers.

Transmitter Buffer

The transmitter's buffer write pointer (TXUSRCLK) is frequency-locked to its read pointer (REFCLK). Therefore, clock correction and channel bonding are not required. The purpose of the transmitter's buffer is to accommodate a phase difference between TXUSRCLK and REFCLK. A simple FIFO suffices for this purpose. A FIFO depth of four will permit reliable operation with simple detection of overflow or underflow, which could occur if the clocks are not frequency-locked.

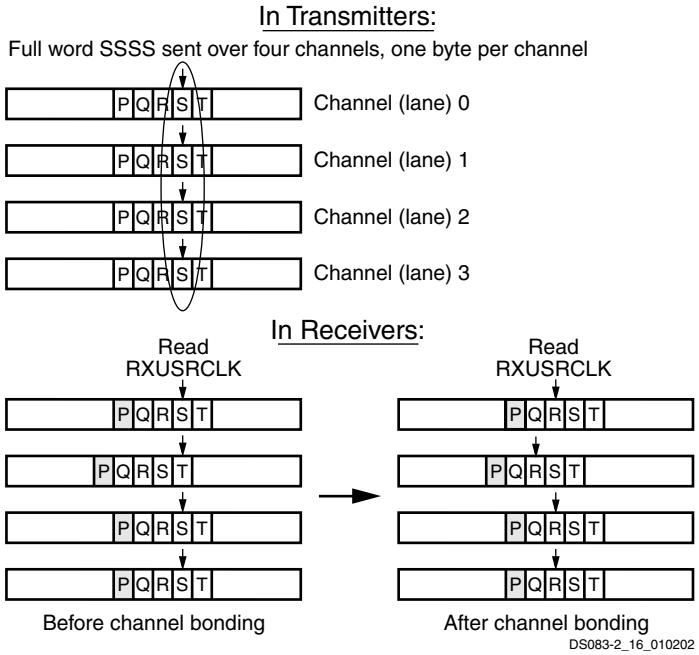

Figure 7: **Channel Bonding (Alignment)**

RocketIO X Configuration

This section outlines functions that can be selected or controlled by configuration. Xilinx implementation software supports the transceiver primitives shown in Table 3.

Table 3: **Supported RocketIO X Transceiver Primitives**

Primitive	Description
GT10_CUSTOM	Fully customizable by user
GT10_OC48_1	SONET OC-48, 1-byte data path
GT10_OC48_2	SONET OC-48, 2-byte data path
GT10_OC48_4	SONET OC-48, 4-byte data path
GT10_PCI_EXPRESS_1	PCI Express, 1-byte data path
GT10_PCI_EXPRESS_2	PCI Express, 2-byte data path
GT10_PCI_EXPRESS_4	PCI Express, 4-byte data path
GT10_INFINIBAND_1	Infiniband, 1-byte data path
GT10_INFINIBAND_2	Infiniband, 2-byte data path
GT10_INFINIBAND_4	Infiniband, 4-byte data path

Other RocketIO X Features and Notes

Loopback

In order to facilitate testing without having the need to either apply patterns or measure data at GHz rates, four programmable loop-back features are available.

The first option, serial loopback, is available in two modes: *pre-driver* and *post-driver*.

- The pre-driver mode loops back to the receiver without going through the output driver. In this mode, TXP and TXN are not driven and therefore need not be terminated.
- The post-driver mode is the same as the RocketIO loopback. In this mode, TXP and TXN are driven and must be properly terminated.

The third option, parallel loopback, checks the digital circuitry. When parallel loopback is enabled, the serial loopback path is disabled. However, the transmitter outputs remain active, and data can be transmitted. If TXINHIBIT is asserted, TXP is forced to 0 until TXINHIBIT is de-asserted.

The fourth option, repeater loopback, allows received data to be transmitted without going through the FPGA fabric.

Reset

The receiver and transmitter have their own synchronous reset inputs. The transmitter reset, TXRESET, recenters the transmission FIFO and resets all transmitter registers and the encoder. The receiver reset, RXRESET, recenters the receiver elastic buffer and resets all receiver registers and the decoder. When the signals TXRESET or RXRESET are asserted High, the PCS is in reset. After TXRESET or RXRESET are deasserted, the PCS takes five clocks to come out of reset for each clock domain.

The PMA configuration vector is not affected during this reset, so the PMA speed, filter settings, and so on, all remain the same. Also, the PMA internal pipeline is not affected and continues to operate in normal fashion.

Power

The transceiver voltage regulator circuits must not be shared with any other supplies (including FPGA supplies V_{CCINT}, V_{CCO}, V_{CCAUX}, and V_{REF}). Voltage regulators can be shared among transceiver power supplies of the same voltage, but each supply pin must still have its own separate passive filtering network.

All RocketIO transceivers in the FPGA, whether instantiated in the design or not, must be connected to power and ground. Unused transceivers can be powered by any 1.5V or 2.5V source, and passive filtering is not required.

The Power Down feature is controlled by the transceiver's POWERDOWN input pin. Any given transceiver that is not instantiated in the design is automatically set to the POWERDOWN state by the Xilinx ISE development software. The Power Down pin on the FPGA package has no effect on the MGT.

Functional Description: RocketIO Multi-Gigabit Transceiver (MGT)

This section summarizes the features of the RocketIO multi-gigabit transceiver. For an in-depth discussion of the RocketIO MGT, including digital and analog design considerations, refer to the ***RocketIO Transceiver User Guide***.

RocketIO Overview

Up to twenty RocketIO MGTs are available. The MGT is designed to operate at any baud rate in the range of 622 Mb/s to 3.125 Gb/s per channel. This includes specific baud rates used by various standards as listed in Table 4.

The RocketIO MGT consists of the *Physical Media Attachment* (PMA) and *Physical Coding Sublayer* (PCS). The PMA contains the 3.125 Gb/s serializer/deserializer (SERDES), TX/RX buffers, clock generator, and clock recovery circuitry. The PCS contains the bypassable 8B/10B encoder/ decoder, elastic buffers, and Cyclic Redundancy Check (CRC) units. The encoder and decoder handle the 8B/10B coding scheme. The elastic buffers support the clock correction (rate matching) and channel bonding features. The CRC units perform CRC generation and checking.

See Table 7, page 17, for a summary of the differences between the RocketIO X PMA/PCS and the RocketIO PMA/PCS.

Figure 10, page 11 shows a high-level block diagram of the RocketIO transceiver and its FPGA interface signals.

Table 4: **Protocols Supported by RocketIO Transceiver**

Mode	Channels (Lanes)(1)	I/O Bit Rate (Gb/s)
Fibre Channel	1	1.06
		2.12
		3.1875 (2)
Gigabit Ethernet	1	1.25
10Gbit Ethernet	4	3.125
Infiniband	1, 4, 12	2.5
Aurora	1, 2, 3, 4, ...	0.622 – 3.125
Custom Protocol	1, 2, 3, 4, ...	up to 3.125

Notes:
1. One channel is considered to be one transceiver.
2. Virtex-II Pro MGT can support the 10G Fibre Channel data rates of 3.1875 Gb/s across 6" of standard FR-4 PCB and one connector (Molex 74441 or equivalent) with a bit error rate of 10^{-12} or better.

PMA

Transmitter Output

The RocketIO transceiver is implemented in *Current Mode Logic* (CML). A CML transmitter output consists of transistors configured as shown in Figure 8. CML uses a positive supply and offers easy interface requirements. In this configuration, both legs of the driver, VP and VN, sink current, with one leg always sinking more current than its complement. The CML output consists of a differential pair with 50Ω (or, optionally, 75Ω) source resistors. The signal swing is created by switching the current in a common-source differential pair.

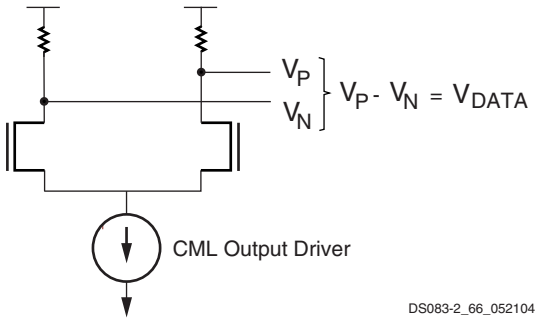

Figure 8: **CML Output Configuration**

Transmitter Termination

On-chip termination is provided at the transmitter, eliminating the need for external termination. The output driver and termination are powered by V_{TTX}. This configuration uses a CML approach with selectable 50Ω or 75Ω termination to TXP and TXN as shown in Figure 9.

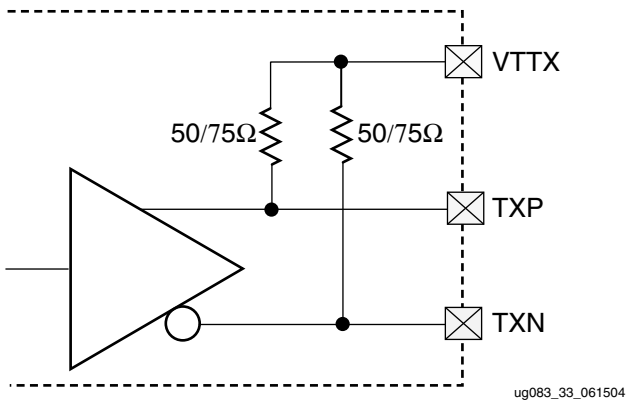

Figure 9: **RocketIO Transmit Termination**

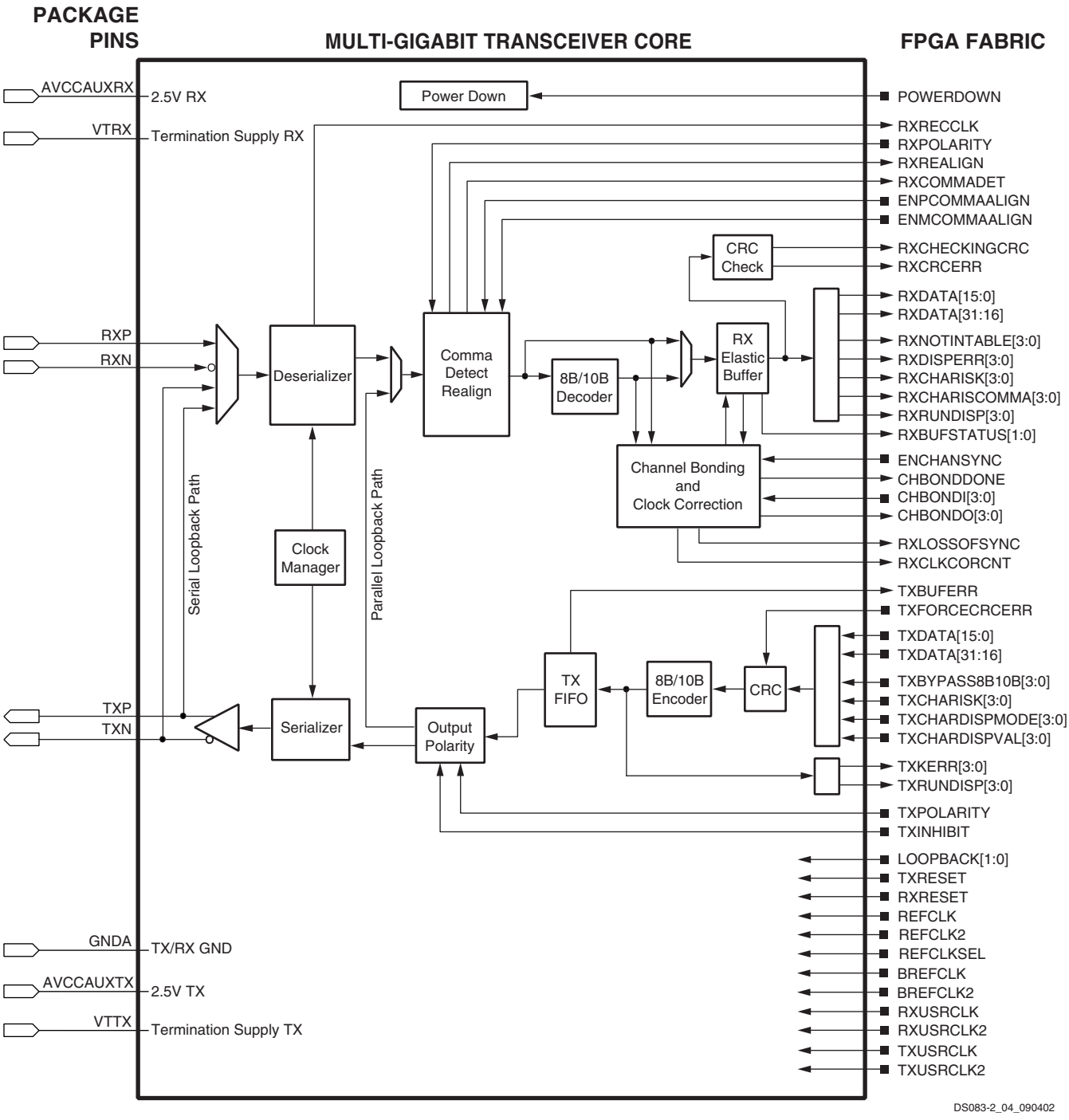

Figure 10: **RocketIO Transceiver Block Diagram**

Output Swing and Pre-emphasis

The output swing and pre-emphasis levels of the RocketIO MGTs are fully programmable. Each is controlled via attributes at configuration, but can be modified via partial reconfiguration.

The programmable output swing control can adjust the differential output level between 400 mV and 800 mV in four increments of 100 mV.

With pre-emphasis, the differential voltage swing is boosted to create a stronger rising waveform. This method compensates for high-frequency loss in the transmission media that would otherwise limit the magnitude of this waveform. Lossy transmission lines cause the dissipation of electrical energy. This pre-emphasis technique extends the distance that signals can be driven down lossy line media and increases the signal-to-noise ratio at the receiver.

Serializer

The serializer multiplies the reference frequency provided on REFCLK by 20. The multiplication of the clock is achieved by using an embedded PLL.

Data is converted from parallel to serial format and transmitted on the TXP and TXN differential outputs. The electrical connection of TXP and TXN can be interchanged through configuration. This option can be controlled by an input (TXPOLARITY) at the FPGA transmitter interface.

Deserializer

The serial transceiver input is locked to the input data stream through Clock and Data Recovery (CDR), a built-in feature of the RocketIO transceiver. CDR keys off the rising and falling edges of incoming data and derives a clock that is representative of the incoming data rate.

The derived clock, RXRECCLK, is generated and locked to as long as it remains within the specified component range. This clock is presented to the FPGA fabric at $^1/_{20}$ the incoming data rate.

A sufficient number of transitions must be present in the data stream for CDR to work properly. CDR requires approximately 5,000 transitions upon power-up to guarantee locking to the incoming data rate. Once lock is achieved, up to 75 missing transitions can be tolerated before lock to the incoming data stream is lost. The CDR circuit is guaranteed to work with 8B/10B encoding.

Another feature of CDR is its ability to accept an external precision reference clock, REFCLK, which either acts to clock incoming data or to assist in synchronizing the derived RXRECCLK.

For further clarity, the TXUSRCLK is used to clock data from the FPGA fabric to the TX FIFO. The FIFO depth accounts for the slight phase difference between these two clocks. If the clocks are locked in frequency, then the FIFO acts much like a pass-through buffer.

The receiver can be configured to reverse the RXP and RXN inputs. This can be useful in the event that printed circuit board traces have been reversed.

Receiver Termination

On-chip termination is provided at the receiver, eliminating the need for external termination. The receiver includes programmable on-chip termination circuitry for 50Ω (default) or 75Ω impedance, as shown in Figure 11.

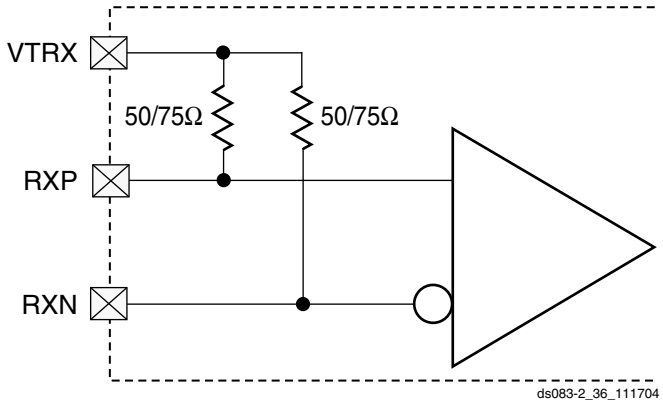

Figure 11: **RocketIO Receive Termination**

PCS

Fabric Data Interface

Internally, the PCS operates in 2-byte mode (16/20 bits). The FPGA fabric interface can either be 1, 2, or 4 bytes wide. When accompanied by the predefined modes of the PMA, the user thus has a large combination of protocols and data rates from which to choose.

USRCLK2 clocks data on the fabric side, while USRCLK clocks data on the PCS side. This creates distinct USRCLK/USRCLK2 frequency ratios for different combinations of fabric and internal data widths. Table 5 summarizes the USRCLK2 to USRCLK ratios for the three fabric data widths.

No fixed phase relationship is assumed between REFCLK, RXRECCLK, and/or any other clock that is not tied to either of these clocks. When RXUSRCLK and RXUSRCLK2 have different frequencies, each edge of the slower clock is aligned to a falling edge of the faster clock. The same relationships apply to TXUSRCLK and TXUSRCLK2.

Table 5: **Clock Ratios for Various Data Widths**

Fabric Data Width	Frequency Ratio of USRCLK:USRCLK2
1-byte	1:2 (1)
2-byte	1:1
4-byte	2:1 (1)

Notes:
1. Each edge of slower clock must align with falling edge of faster clock.

FPGA Transmit Interface

The FPGA can send either one, two, or four characters of data to the transmitter. Each character can be either 8 bits or 10 bits wide. If 8-bit data is applied, the additional inputs become control signals for the 8B/10B encoder. When the 8B/10B encoder is bypassed, the 10-bit character order is generated as follows:

TXCHARDISPMODE[0] (first bit transmitted)
TXCHARDISPVAL[0]
TXDATA[7:0] (last bit transmitted is TXDATA[0])

Disparity Control

The 8B/10B encoder is initialized with a negative running disparity. Unique control allows forcing the current running disparity state.

TXRUNDISP signals its current running disparity. This may be useful in those cases where there is a need to manipulate the initial running disparity value.

Bits TXCHARDISPMODE and TXCHARDISPVAL control the generation of running disparity before each byte.

For example, the transceiver can generate the sequence

```
K28.5+ K28.5+ K28.5- K28.5-
```

or

```
K28.5- K28.5- K28.5+ K28.5+
```

by specifying inverted running disparity for the second and fourth bytes.

Transmit FIFO

Proper operation of the circuit is only possible if the FPGA clock (TXUSRCLK) is frequency-locked to the reference clock (REFCLK). Phase variations up to one clock cycle are allowable. The FIFO has a depth of four. Overflow or underflow conditions are detected and signaled at the interface. Bypassing of this FIFO is programmable.

8B/10B Encoder

Note: In the RocketIO transceiver, the most-significant byte is sent first; in the RocketIO X transceiver, the least-significant byte is sent first.

A bypassable 8B/10B encoder is included. The encoder uses the same 256 data characters and 12 control characters used by Gigabit Ethernet, Fibre Channel, and InfiniBand.

The encoder accepts 8 bits of data along with a K-character signal for a total of 9 bits per character applied, and generates a 10 bit character for transmission. If the K-character signal is High, the data is encoded into one of the twelve possible K-characters available in the 8B/10B code. If the K-character input is Low, the 8 bits are encoded as standard data. If the K-character input is High, and a user applies other than one of the twelve possible combinations, TXKERR indicates the error.

8B/10B Decoder

Note: In the RocketIO transceiver, the most-significant byte is sent first; in the RocketIO X transceiver, the least-significant byte is sent first.

An optional 8B/10B decoder is included. A programmable option allows the decoder to be bypassed. When the 8B/10B decoder is bypassed, the 10-bit character order is, for example,

RXCHARISK[0] (first bit received)
RXRUNDISP[0]
RXDATA[7:0] (last bit received is RXDATA[0])

The decoder uses the same table that is used for Gigabit Ethernet, Fibre Channel, and InfiniBand. In addition to decoding all data and K-characters, the decoder has several extra features. The decoder separately detects both “disparity errors” and “out-of-band” errors. A disparity error is the reception of 10-bit character that exists within the 8B/10B table but has an incorrect disparity. An out-of-band error is the reception of a 10-bit character that does not exist within the 8B/10B table. It is possible to obtain an out-of-band error without having a disparity error. The proper disparity is always computed for both legal and illegal characters. The current running disparity is available at the RXRUNDISP signal.

The 8B/10B decoder performs a unique operation if out-of-band data is detected. If out-of-band data is detected, the decoder signals the error and passes the illegal 10-bits through and places them on the outputs. This can be used for debugging purposes if desired.

The decoder also signals the reception of one of the 12 valid K-characters. In addition, a programmable comma detect is included. The comma detect signal registers a comma on the receipt of any comma+, comma–, or both. Since the comma is defined as a 7-bit character, this includes several out-of-band characters. Another option allows the decoder to detect only the three defined commas (K28.1, K28.5, and K28.7) as comma+, comma–, or both. In total, there are six possible options, three for valid commas and three for "any comma."

Note that all bytes (1, 2, or 4) at the RX FPGA interface each have their own individual 8B/10B indicators (K-character, disparity error, out-of-band error, current running disparity, and comma detect).

Receiver Buffer

The receiver includes buffers (FIFOs) in the datapath. This section gives the reasons for including the buffers and outlines their operation.

The receiver buffer is required for two reasons:

- *Clock correction* to accommodate the slight difference in frequency between the recovered clock RXRECCLK and the internal FPGA user clock RXUSRCLK
- *Channel bonding* to allow realignment of the input stream to ensure proper alignment of data being read through multiple transceivers

The receiver uses an *elastic buffer,* where "elastic" refers to the ability to modify the read pointer for clock correction and channel bonding.

Comma Detection

Word alignment is dependent on the state of comma detect bits. If comma detect is enabled, the transceiver recognizes up to two 10-bit preprogrammed characters. Upon detection of the character or characters, the comma detect output is driven high and the data is synchronously aligned. If a comma is detected and the data is aligned, no further alignment alteration takes place. If a comma is received and realignment is necessary, the data is realigned and an indication is given at the receiver interface. The realignment indicator is a distinct output.

The transceiver continuously monitors the data for the presence of the 10-bit character(s). Upon each occurrence of a 10-bit character, the data is checked for word alignment. If comma detect is disabled, the data is not aligned to any particular pattern. The programmable option allows a user to align data on comma+, comma–, both, or a unique user-defined and programmed sequence.

Clock Correction

RXRECCLK (the recovered clock) reflects the data rate of the incoming data. RXUSRCLK defines the rate at which the FPGA fabric consumes the data. Ideally, these rates are identical. However, since the clocks typically have different sources, one of the clocks will be faster than the other. The receiver buffer accommodates this difference between the clock rates. See Figure 12.

Nominally, the buffer is always half full. This is shown in the top buffer, Figure 12, where the shaded area represents buffered data not yet read. Received data is inserted via the write pointer under control of RXRECCLK. The FPGA fabric reads data via the read pointer under control of RXUSRCLK. The half full/half empty condition of the buffer gives a cushion for the differing clock rates. This operation continues indefinitely, regardless of whether or not "meaningful" data is being received. When there is no meaningful data to be received, the incoming data will consist of IDLE characters or other padding.

If RXUSRCLK is faster than RXRECCLK, the buffer becomes more empty over time. The clock correction logic corrects for this by decrementing the read pointer to reread a repeatable byte sequence. This is shown in the middle buffer, Figure 12, where the solid read pointer decrements to the value represented by the dashed pointer.

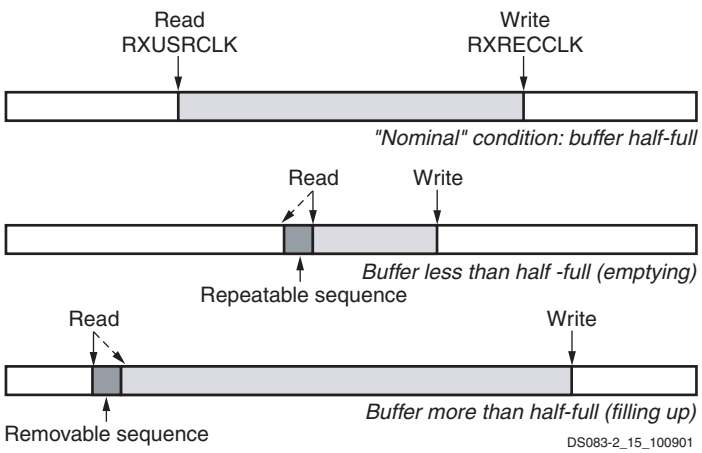

Figure 12: **Clock Correction in Receiver**

By decrementing the read pointer instead of incrementing it in the usual fashion, the buffer is partially refilled. The transceiver design will repeat a single repeatable byte sequence when necessary to refill a buffer. If the byte sequence length is greater than one, and if attribute CLK_COR_REPEAT_WAIT is 0, then the transceiver may repeat the same sequence multiple times until the buffer is refilled to the desired extent.

Similarly, if RXUSRCLK is slower than RXRECCLK, the buffer will fill up over time. The clock correction logic corrects for this by incrementing the read pointer to skip over a removable byte sequence that need not appear in the final FPGA fabric byte stream. This is shown in the bottom buffer, Figure 12, where the solid read pointer increments to the value represented by the dashed pointer. This accelerates the emptying of the buffer, preventing its overflow. The transceiver design will skip a single byte sequence when necessary to partially empty a buffer. If attribute CLK_COR_REPEAT_WAIT is 0, the transceiver may also skip two consecutive removable byte sequences in one step to further empty the buffer when necessary.

These operations require the clock correction logic to recognize a byte sequence that can be freely repeated or omitted in the incoming data stream. This sequence is generally an IDLE sequence, or other sequence comprised of special values that occur in the gaps separating packets of meaningful data. These gaps are required to occur sufficiently often to facilitate the timely execution of clock correction.

Channel Bonding

Some gigabit I/O standards such as Infiniband specify the use of multiple transceivers in parallel for even higher data rates. Words of data are split into bytes, with each byte sent over a separate channel (transceiver). See Figure 13.

The top half of the figure shows the transmission of words split across four transceivers (channels or lanes). PPPP, QQQQ, RRRR, SSSS, and TTTT represent words sent over the four channels.

The bottom-left portion of Figure 13 shows the initial situation in the FPGA's receivers at the other end of the four channels. Due to variations in transmission delay—especially if the channels are routed through repeaters—the FPGA fabric might not correctly assemble the bytes into complete words. The bottom-left illustration shows the incorrect assembly of data words PQPP, QRQQ, RSRR, and so forth.

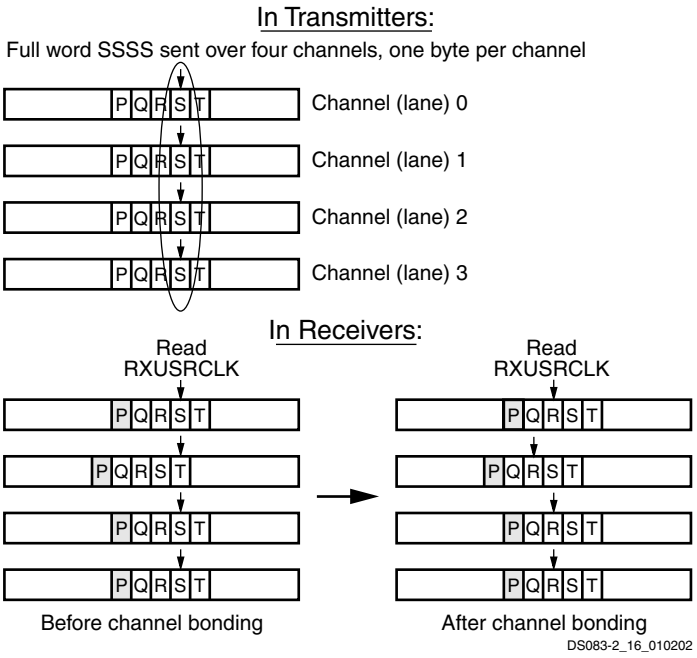

Figure 13: **Channel Bonding (Alignment)**

To support correction of this misalignment, the data stream includes special byte sequences that define corresponding points in the several channels. In the bottom half of Figure 13, the shaded "P" bytes represent these special characters. Each receiver recognizes the "P" channel bonding character, and remembers its location in the buffer. At some point, one transceiver designated as the master instructs all the transceivers to align to the channel bonding character "P" (or to some location relative to the channel bonding character).

After this operation, words transmitted to the FPGA fabric are properly aligned: RRRR, SSSS, TTTT, and so forth, as shown in the bottom-right portion of Figure 13. To ensure that the channels remain properly aligned following the channel bonding operation, the master transceiver must also control the clock correction operations described in the previous section for all channel-bonded transceivers.

Transmitter Buffer

The transmitter's buffer write pointer (TXUSRCLK) is frequency-locked to its read pointer (REFCLK). Therefore, clock correction and channel bonding are not required. The purpose of the transmitter's buffer is to accommodate a phase difference between TXUSRCLK and REFCLK. A simple FIFO suffices for this purpose. A FIFO depth of four will permit reliable operation with simple detection of overflow or underflow, which could occur if the clocks are not frequency-locked.

RocketIO Configuration

This section outlines functions that can be selected or controlled by configuration. Xilinx implementation software supports 16 transceiver primitives, as shown in Table 6.

Each of the primitives in Table 6 defines default values for the configuration attributes, allowing some number of them to be modified by the user. Refer to the ***RocketIO Transceiver User Guide*** for more details.

Table 6: **Supported RocketIO MGT Protocol Primitives**

GT_CUSTOM	Fully customizable by user
GT_FIBRE_CHAN_1	Fibre Channel, 1-byte data path
GT_FIBRE_CHAN_2	Fibre Channel, 2-byte data path
GT_FIBRE_CHAN_4	Fibre Channel, 4-byte data path
GT_ETHERNET_1	Gigabit Ethernet, 1-byte data path
GT_ETHERNET_2	Gigabit Ethernet, 2-byte data path
GT_ETHERNET_4	Gigabit Ethernet, 4-byte data path
GT_XAUI_1	10-gigabit Ethernet, 1-byte data path
GT_XAUI_2	10-gigabit Ethernet, 2-byte data path
GT_XAUI_4	10-gigabit Ethernet, 4-byte data path
GT_INFINIBAND_1	Infiniband, 1-byte data path
GT_INFINIBAND_2	Infiniband, 2-byte data path
GT_INFINIBAND_4	Infiniband, 4-byte data path
GT_AURORA_1(1)	1-byte data path
GT_AURORA_2(1)	2-byte data path
GT_AURORA_4(1)	4-byte data path

Notes:
1. For more information on the Aurora protocol, visit http://www.xilinx.com.

Other RocketIO Features and Notes

CRC

The RocketIO transceiver CRC logic supports the 32-bit invariant CRC calculation used by Infiniband, FibreChannel, and Gigabit Ethernet.

On the transmitter side, the CRC logic recognizes where the CRC bytes should be inserted and replaces four placeholder bytes at the tail of a data packet with the computed CRC. For Gigabit Ethernet and FibreChannel, transmitter

CRC may adjust certain trailing bytes to generate the required running disparity at the end of the packet.

On the receiver side, the CRC logic verifies the received CRC value, supporting the same standards as above.

The CRC logic also supports a user mode, with a simple data packet stucture beginning and ending with user-defined SOP and EOP characters.

Loopback

In order to facilitate testing without having the need to either apply patterns or measure data at GHz rates, two programmable loop-back features are available.

One option, serial loopback, places the gigabit transceiver into a state where transmit data is directly fed back to the receiver. An important point to note is that the feedback path is at the output pads of the transmitter. This tests the entirety of the transmitter and receiver.

The second option, parallel loopback, checks the digital circuitry. When parallel loopback is enabled, the serial loopback path is disabled. However, the transmitter outputs remain active, and data can be transmitted. If TXINHIBIT is asserted, TXP is forced to 0 until TXINHIBIT is de-asserted.

Reset

The receiver and transmitter have their own synchronous reset inputs. The transmitter reset recenters the transmission FIFO, and resets all transmitter registers and the 8B/10B decoder. The receiver reset recenters the receiver elastic buffer, and resets all receiver registers and the 8B/10B encoder. Neither reset has any effect on the PLLs.

Power

All RocketIO transceivers in the FPGA, whether instantiated in the design or not, must be connected to power and ground. Unused transceivers can be powered by any 2.5V source, and passive filtering is not required.

Power Down

The Power Down module is controlled by the transceiver's POWERDOWN input pin. The Power Down pin on the FPGA package has no effect on the transceiver.

RocketIO and RocketIO X Feature Comparison

Table 7 summarizes the major differences between the RocketIO and RocketIO X MGTs. The ***RocketIO X Transceiver User Guide*** has more details, including a design migration guide in the Appendix.

Table 7: **RocketIO PMA versus RocketIO X PMA**

	RocketIO X Transceiver	RocketIO Transceiver
PCS Features:		
FPGA interface	1, 2, 4, and 8 byte width	1, 2, and 4 byte width
Coding support	8B/10B and 64B/66B bypassable	8B/10B bypassable
Gearbox/scrambler support	Yes	N/A
CRC Support	No	Yes
Half rate	No	Yes
PMA Features:		
Baud rate	2.488 Gb/s - 6.25 Gb/s(2)	622 Mb/s - 3.125 Gb/s
Reference clock frequency tolerance	350 PPM	100 PPM
Reference clock multiplier	x16, x20, x32, x40	x20
Max run length	75	75
Receive equalization	Built-in analog linear, programmable	None
Output swing (differential p-p)	200 mV to 1600 mV, programmable	800 mV to 1600 mV, programmable
Pre-emphasis	0% to 500%, programmable	4 selectable levels from 10% to 33%
Slew rate control	2 selectable levels	None
Termination	On-chip internal, 50Ω	On-chip internal, 50Ω/75Ω selectable
AC coupling capacitor	On-chip internal. Can be AC- or DC-coupled externally	None
Transmit supply voltage (AVCCAUXTX)	2.5V	2.5V
Receive supply voltage (AVCCAUXRX)	1.5V, 1.8V(1)	2.5V
PMA configuration support	Direct, dynamic, and partial configuration	Partial configuration
Others:		
JTAG support	Input only	None
Process technology	0.13 µm	0.25 µm
Available packages	Flip-chip only	Flip-chip and wire-bond

Notes:
1. AVCCAUXRX for RocketIO X MGT is 1.5V (nominal) for 8B/10B-encoded data. For all other encoding protocols, AVCCAUXRX is 1.8V (nominal).
2. The XC2VPX70 operates at a fixed 4.25 Gb/s baud rate.

Functional Description: Processor Block

This section briefly describes the interfaces and components of the Processor Block. The subsequent section, Functional Description: Embedded PowerPC 405 Core beginning on page 20, offers a summary of major PPC405 core features. For an in-depth discussion on both the Processor Block and PPC405, see tthe **PowerPC Processor Reference Guide** and the **PowerPC 405 Processor Block Reference Guide** available on the Xilinx website at **http://www.xilinx.com**.

Processor Block Overview

Figure 14 shows the internal architecture of the Processor Block.

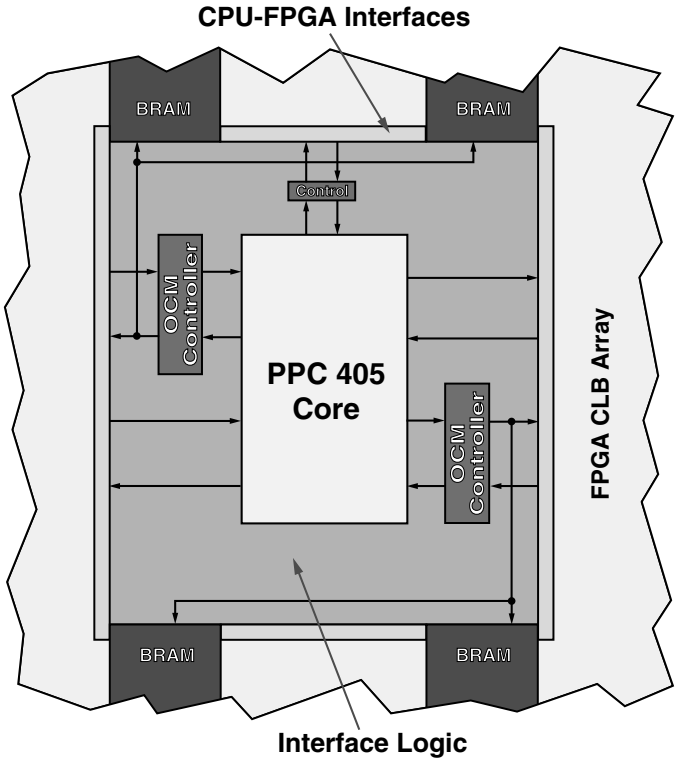

Figure 14: **Processor Block Architecture**

Within the Virtex-II Pro Processor Block, there are four components:

- Embedded IBM PowerPC 405-D5 RISC CPU core
- On-Chip Memory (OCM) controllers and interfaces
- Clock/control interface logic
- CPU-FPGA Interfaces

Embedded PowerPC 405 RISC Core

The PowerPC 405D5 core is a 0.13 µm implementation of the IBM PowerPC 405D4 core. The advanced process technology enables the embedded PowerPC 405 (PPC405) core to operate at 300+ MHz while maintaining low power consumption. Specially designed interface logic integrates the core with the surrounding CLBs, block RAMs, and general routing resources. Up to four Processor Blocks can be available in a single Virtex-II Pro device.

The embedded PPC405 core implements the PowerPC User Instruction Set Architecture (UISA), user-level registers, programming model, data types, and addressing modes for 32-bit fixed-point operations. 64-bit operations, auxiliary processor operations, and floating-point operations are trapped and can be emulated in software.

Most of the PPC405 core features are compatible with the specifications for the PowerPC Virtual Environment Architecture (VEA) and Operating Environment Architecture (OEA). They also provide a number of optimizations and extensions to the lower layers of the PowerPC Architecture. The full architecture of the PPC405 is defined by the PowerPC Embedded Environment and PowerPC UISA documentation, available from IBM.

On-Chip Memory (OCM) Controllers

Introduction

The OCM controllers serve as dedicated interfaces between the block RAMs in the FPGA fabric (see 18 Kb Block SelectRAM+ Resources, page 44) and OCM signals available on the embedded PPC405 core. The OCM signals on the PPC405 core are designed to provide very quick access to a fixed amount of instruction and data memory space. The OCM controller provides an interface to both the 64-bit Instruction-Side Block RAM (ISBRAM) and the 32-bit Data-Side Block RAM (DSBRAM). The designer can choose to implement:

- ISBRAM only
- DSBRAM only
- Both ISBRAM and DSBRAM
- No ISBRAM and no DSBRAM

One of OCM's primary advantages is that it guarantees a fixed latency of execution for a higher level of determinism. Additionally, it reduces cache pollution and thrashing, since the cache remains available for caching code from other memory resources.

Typical applications for DSOCM include scratch-pad memory, as well as use of the dual-port feature of block RAM to enable bidirectional data transfer between processor and FPGA. Typical applications for ISOCM include storage of interrupt service routines.

Functional Features

Common Features

- Separate Instruction and Data memory interface between processor core and BRAMs in FPGA
- Dedicated interface to Device Control Register (DCR) bus for ISOCM and DSOCM

- Single-cycle and multi-cycle mode option for I-side and D-side interfaces
- Single cycle = one CPU clock cycle; multi-cycle = minimum of two and maximum of eight CPU clock cycles
- FPGA configurable DCR addresses within DSOCM and ISOCM.
- Independent 16 MB logical memory space available within PPC405 memory map for each of the DSOCM and ISOCM. The number of block RAMs in the device might limit the maximum amount of OCM supported.
- Maximum of 64K and 128K bytes addressable from DSOCM and ISOCM interfaces, respectively, using address outputs from OCM directly without additional decoding logic.

Data-Side OCM (DSOCM)

- 32-bit Data Read bus and 32-bit Data Write bus
- Byte write access to DSBRAM support
- Second port of dual port DSBRAM is available to read/write from an FPGA interface
- 22-bit address to DSBRAM port
- 8-bit DCR Registers: DSCNTL, DSARC
- Three alternatives to write into DSBRAM: BRAM initialization, CPU, FPGA H/W using second port

Instruction-Side OCM (ISOCM)

The ISOCM interface contains a 64-bit read only port, for instruction fetches, and a 32-bit write only port, to initialize or test the ISBRAM. When implementing the read only port, the user must deassert the write port inputs. The preferred method of initializing the ISBRAM is through the configuration bitstream.

- 64-bit Data Read Only bus (two instructions per cycle)
- 32-bit Data Write Only bus (through DCR)
- Separate 21-bit address to ISBRAM
- 8-bit DCR Registers: ISCNTL, ISARC
- 32-bit DCR Registers: ISINIT, ISFILL
- Two alternatives to write into ISBRAM: BRAM initialization, DCR and write instruction

Clock/Control Interface Logic

The clock/control interface logic provides proper initialization and connections for PPC405 clock/power management, resets, PLB cycle control, and OCM interfaces. It also couples user signals between the FPGA fabric and the embedded PPC405 CPU core.

The processor clock connectivity is similar to CLB clock pins. It can connect either to global clock nets or general routing resources. Therefore the processor clock source can come from DCM, CLB, or user package pin.

CPU-FPGA Interfaces

All Processor Block user pins link up with the general FPGA routing resources through the CPU-FPGA interface. Therefore processor signals have the same routability as other non-Processor Block user signals. Longlines and hex lines travel across the Processor Block both vertically and horizontally, allowing signals to route through the Processor Block.

Processor Local Bus (PLB) Interfaces

The PPC405 core accesses high-speed system resources through PLB interfaces on the instruction and data cache controllers. The PLB interfaces provide separate 32-bit address/64-bit data buses for the instruction and data sides.

The cache controllers are both PLB masters. PLB arbiters are implemented in the FPGA fabric and are available as soft IP cores.

Device Control Register (DCR) Bus Interface

The device control register (DCR) bus has 10 bits of address space for components external to the PPC405 core. Using the DCR bus to manage status and configuration registers reduces PLB traffic and improves system integrity. System resources on the DCR bus are protected or isolated from wayward code since the DCR bus is not part of the system memory map.

External Interrupt Controller (EIC) Interface

Two level-sensitive user interrupt pins (critical and non-critical) are available. They can be either driven by user defined logic or Xilinx soft interrupt controller IP core outside the Processor Block.

Clock/Power Management (CPM) Interface

The CPM interface supports several methods of clock distribution and power management. Three modes of operation that reduce power consumption below the normal operational level are available.

Reset Interface

There are three user reset input pins (core, chip, and system) and three user reset output pins for different levels of reset, if required.

Debug Interface

Debugging interfaces on the embedded PPC405 core, consisting of the JTAG and Trace ports, offer access to resources internal to the core and assist in software development. The JTAG port provides basic JTAG chip testing functionality as well as the ability for external debug tools to gain control of the processor for debug purposes. The Trace port furnishes programmers with a mechanism for acquiring instruction execution traces.

The JTAG port is compatible with IEEE Std 1149.1, which defines a test access port (TAP) and Boundary-Scan architecture. Extensions to the JTAG interface provide debuggers with processor control that includes stopping, starting, and stepping the PPC405 core. These extensions are compliant with the IEEE 1149.1 specifications for vendor-specific extensions.

The Trace port provides instruction execution trace information to an external trace tool. The PPC405 core is capable of back trace and forward trace. Back trace is the tracing of instructions prior to a debug event while forward trace is the tracing of instructions after a debug event.

The processor JTAG port and the FPGA JTAG port can be accessed independently, or the two can be programmatically linked together and accessed via the dedicated FPGA JTAG pins.

For detailed information on the PPC405 JTAG interface, please refer to the "JTAG Interface" section of the **PowerPC 405 Processor Block Reference Guide**

CoreConnect™ Bus Architecture

The Processor Block is compatible with the CoreConnect™ bus architecture. Any CoreConnect compliant cores including Xilinx soft IP can integrate with the Processor Block through this high-performance bus architecture implemented on FPGA fabric.

The CoreConnect architecture provides three buses for interconnecting Processor Blocks, Xilinx soft IP, third party IP, and custom logic, as shown in Figure 15:

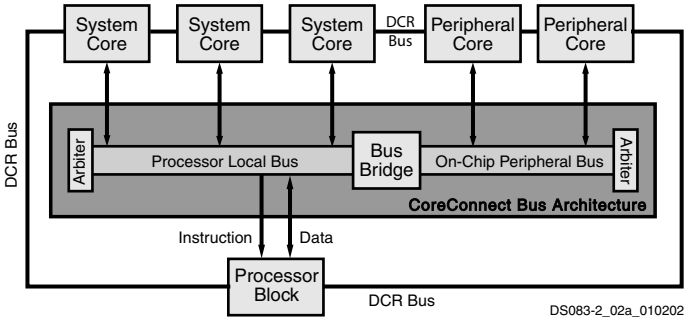

Figure 15: **CoreConnect Block Diagram**

- Processor Local Bus (PLB)
- On-Chip Peripheral Bus (OPB)
- Device Control Register (DCR) bus

High-performance peripherals connect to the high-bandwidth, low-latency PLB. Slower peripheral cores connect to the OPB, which reduces traffic on the PLB, resulting in greater overall system performance.

For more information, refer to:
http://www-3.ibm.com/chips/techlib/techlib.nfs/productfamilies/CoreConnect_Bus_Architecture/

Functional Description: Embedded PowerPC 405 Core

This section offers a brief overview of the various functional blocks shown in Figure 16.

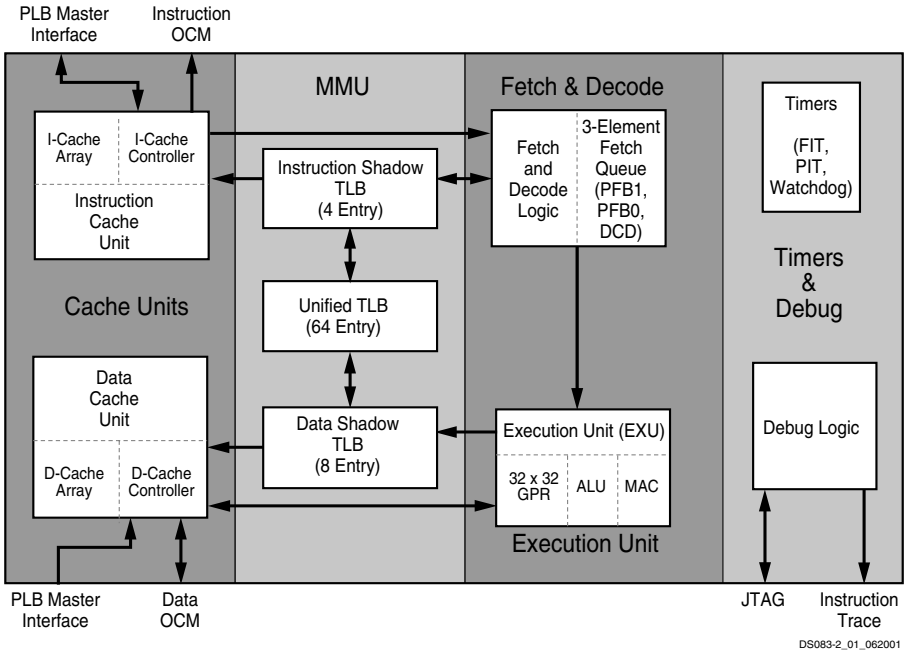

Figure 16: **Embedded PPC405 Core Block Diagram**

Embedded PPC405 Core

The embedded PPC405 core is a 32-bit Harvard architecture processor. Figure 16 illustrates its functional blocks:

- Cache units
- Memory Management unit
- Fetch Decode unit

- Execution unit
- Timers
- Debug logic unit

It operates on instructions in a five stage pipeline consisting of a fetch, decode, execute, write-back, and load write-back stage. Most instructions execute in a single cycle, including loads and stores.

Instruction and Data Cache

The embedded PPC405 core provides an instruction cache unit (ICU) and a data cache unit (DCU) that allow concurrent accesses and minimize pipeline stalls. The instruction and data cache array are 16 KB each. Both cache units are two-way set associative. Each way is organized into 256 lines of 32 bytes (eight words). The instruction set provides a rich assortment of cache control instructions, including instructions to read tag information and data arrays.

The PPC405 core accesses external memory through the instruction (ICU) and data cache units (DCU). The cache units each include a 64-bit PLB master interface, cache arrays, and a cache controller. The ICU and DCU handle cache misses as requests over the PLB to another PLB device such as an external bus interface unit. Cache hits are handled as single cycle memory accesses to the instruction and data caches.

Instruction Cache Unit (ICU)

The ICU provides one or two instructions per cycle to the instruction queue over a 64-bit bus. A line buffer (built into the output of the array for manufacturing test) enables the ICU to be accessed only once for every four instructions, to reduce power consumption by the array.

The ICU can forward any or all of the four or eight words of a line fill to the EXU to minimize pipeline stalls caused by cache misses. The ICU aborts speculative fetches abandoned by the EXU, eliminating unnecessary line fills and enabling the ICU to handle the next EXU fetch. Aborting abandoned requests also eliminates unnecessary external bus activity, thereby increasing external bus utilization.

Data Cache Unit (DCU)

The DCU transfers one, two, three, four, or eight bytes per cycle, depending on the number of byte enables presented by the CPU. The DCU contains a single-element command and store data queue to reduce pipeline stalls; this queue enables the DCU to independently process load/store and cache control instructions. Dynamic PLB request prioritization reduces pipeline stalls even further. When the DCU is busy with a low-priority request while a subsequent storage operation requested by the CPU is stalled; the DCU automatically increases the priority of the current request to the PLB.

The DCU provides additional features that allow the programmer to tailor its performance for a given application. The DCU can function in write-back or write-through mode, as controlled by the Data Cache Write-through Register (DCWR) or the Translation Look-aside Buffer (TLB); the cache controller can be tuned for a balance of performance and memory coherency. Write-on-allocate, controlled by the store word on allocate (SWOA) field of the Core Configuration Register 0 (CCR0), can inhibit line fills caused by store misses, to further reduce potential pipeline stalls and unwanted external bus traffic.

Fetch and Decode Logic

The fetch/decode logic maintains a steady flow of instructions to the execution unit by placing up to two instructions in the fetch queue. The fetch queue consists of three buffers: pre-fetch buffer 1 (PFB1), pre-fetch buffer 0 (PFB0), and decode (DCD). The fetch logic ensures that instructions proceed directly to decode when the queue is empty.

Static branch prediction as implemented on the PPC405 core takes advantage of some standard statistical properties of code. Branches with negative address displacement are by default assumed taken. Branches that do not test the condition or count registers are also predicted as taken. The PPC405 core bases branch prediction upon these default conditions when a branch is not resolved and speculatively fetches along the predicted path. The default prediction can be overridden by software at assembly or compile time.

Branches are examined in the decode and pre-fetch buffer 0 fetch queue stages. Two branch instructions can be handled simultaneously. If the branch in decode is not taken, the fetch logic fetches along the predicted path of the branch instruction in pre-fetch buffer 0. If the branch in decode is taken, the fetch logic ignores the branch instruction in pre-fetch buffer 0.

Execution Unit

The embedded PPC405 core has a single issue execution unit (EXU) containing the register file, arithmetic logic unit (ALU), and the multiply-accumulate (MAC) unit. The execution unit performs all 32-bit PowerPC integer instructions in hardware.

The register file is comprised of thirty-two 32-bit general purpose registers (GPR), which are accessed with three read ports and two write ports. During the decode stage, data is read out of the GPRs and fed to the execution unit. Likewise, during the write-back stage, results are written to the GPR. The use of the five ports on the register file enables either a load or a store operation to execute in parallel with an ALU operation.

Memory Management Unit (MMU)

The embedded PPC405 core has a 4 GB address space, which is presented as a flat address space.

The MMU provides address translation, protection functions, and storage attribute control for embedded applications. The MMU supports demand-paged virtual memory and other management schemes that require precise control of logical-to-physical address mapping and flexible

memory protection. Working with appropriate system-level software, the MMU provides the following functions:

- Translation of the 4 GB effective address space into physical addresses
- Independent enabling of instruction and data translation/protection
- Page-level access control using the translation mechanism
- Software control of page replacement strategy
- Additional control over protection using zones
- Storage attributes for cache policy and speculative memory access control

The MMU can be disabled under software control. If the MMU is not used, the PPC405 core provides other storage control mechanisms.

Translation Look-Aside Buffer (TLB)

The Translation Look-Aside Buffer (TLB) is the hardware resource that controls translation and protection. It consists of 64 entries, each specifying a page to be translated. The TLB is fully associative; a given page entry can be placed anywhere in the TLB. The translation function of the MMU occurs pre-cache. Cache tags and indexing use physical addresses.

Software manages the establishment and replacement of TLB entries. This gives system software significant flexibility in implementing a custom page replacement strategy. For example, to reduce TLB thrashing or translation delays, software can reserve several TLB entries in the TLB for globally accessible static mappings. The instruction set provides several instructions used to manage TLB entries. These instructions are privileged and require the software to be executing in supervisor state. Additional TLB instructions are provided to move TLB entry fields to and from GPRs.

The MMU divides logical storage into pages. Eight page sizes (1 KB, 4 KB, 16 KB, 64 KB, 256 KB, 1 MB, 4 MB, and 16 MB) are simultaneously supported, such that, at any given time, the TLB can contain entries for any combination of page sizes. In order for a logical to physical translation to exist, a valid entry for the page containing the logical address must be in the TLB. Addresses for which no TLB entry exists cause TLB-Miss exceptions.

To improve performance, four instruction-side and eight data-side TLB entries are kept in shadow arrays. The shadow arrays allow single-cycle address translation and also help to avoid TLB contention between load/store and instruction fetch operations. Hardware manages the replacement and invalidation of shadow-TLB entries; no system software action is required.

Memory Protection

When address translation is enabled, the translation mechanism provides a basic level of protection.

The Zone Protection Register (ZPR) enables the system software to override the TLB access controls. For example, the ZPR provides a way to deny read access to application programs. The ZPR can be used to classify storage by type; access by type can be changed without manipulating individual TLB entries.

The PowerPC Architecture provides WIU0GE (write-back / write-through, cacheability, user-defined 0, guarded, endian) storage attributes that control memory accesses, using bits in the TLB or, when address translation is disabled, storage attribute control registers.

When address translation is enabled, storage attribute control bits in the TLB control the storage attributes associated with the current page. When address translation is disabled, bits in each storage attribute control register control the storage attributes associated with storage regions. Each storage attribute control register contains 32 fields. Each field sets the associated storage attribute for a 128 MB memory region.

Timers

The embedded PPC405 core contains a 64-bit time base and three timers, as shown in Figure 17:

- Programmable Interval Timer (PIT)
- Fixed Interval Timer (FIT)
- Watchdog Timer (WDT)

The time base counter increments either by an internal signal equal to the CPU clock rate or by a separate external timer clock signal. No interrupts are generated when the time base rolls over. The three timers are synchronous with the time base.

The PIT is a 32-bit register that decrements at the same rate as the time base is incremented. The user loads the PIT register with a value to create the desired delay. When the register reaches zero, the timer stops decrementing and generates a PIT interrupt. Optionally, the PIT can be programmed to auto-reload the last value written to the PIT register, after which the PIT continues to decrement.

The FIT generates periodic interrupts based on one of four selectable bits in the time base. When the selected bit changes from 0 to 1, the PPC405 core generates a FIT interrupt.

The WDT provides a periodic critical-class interrupt based on a selected bit in the time base. This interrupt can be used for system error recovery in the event of software or system lockups. Users may select one of four time periods for the interval and the type of reset generated if the WDT expires twice without an intervening clear from software. If enabled, the watchdog timer generates a reset unless an exception handler updates the WDT status bit before the timer has completed two of the selected timer intervals.

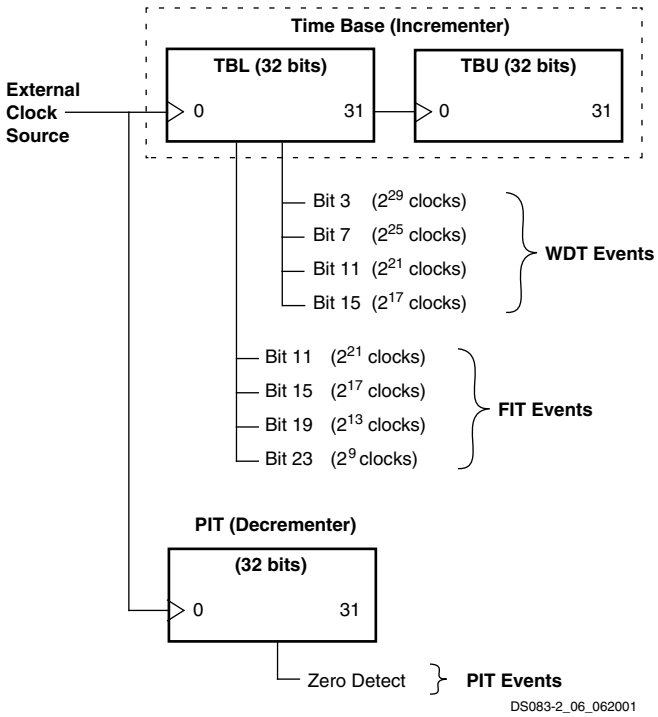

Figure 17: **Relationship of Timer Facilities to Base Clock**

Interrupts

The PPC405 provides an interface to an interrupt controller that is logically outside the PPC405 core. This controller combines the asynchronous interrupt inputs and presents them to the embedded core as a single interrupt signal. The sources of asynchronous interrupts are external signals, the JTAG/debug unit, and any implemented peripherals.

Debug Logic

All architected resources on the embedded PPC405 core can be accessed through the debug logic. Upon a debug event, the PPC405 core provides debug information to an external debug tool. Three different types of tools are supported depending on the debug mode: ROM monitors, JTAG debuggers, and instruction trace tools.

In internal debug mode, a debug event enables exception-handling software at a dedicated interrupt vector to take over the CPU core and communicate with a debug tool. The debug tool has read-write access to all registers and can set hardware or software breakpoints. ROM monitors typically use the internal debug mode.

In external debug mode, the CPU core enters stop state (stops instruction execution) when a debug event occurs. This mode offers a debug tool read-write access to all registers in the PPC405 core. Once the CPU core is in stop state, the debug tool can start the CPU core, step an instruction, freeze the timers, or set hardware or software break points. In addition to CPU core control, the debug logic is capable of writing instructions into the instruction cache, eliminating the need for external memory during initial board bring-up. Communication to a debug tool using external debug mode is through the JTAG port.

Debug wait mode offers the same functionality as external debug mode with one exception. In debug wait mode, the CPU core goes into wait state instead of stop state after a debug event. Wait state is identical to stop state until an interrupt occurs. In wait state, the PPC405 core can vector to an exception handler, service an interrupt and return to wait state. This mode is particularly useful when debugging real time control systems.

Real-time trace debug mode is always enabled. The debug logic continuously broadcasts instruction trace information to the trace port. When a debug event occurs, the debug logic signals an external debug tool to save instruction trace information before and after the event. The number of instructions traced depends on the trace tool.

Debug events signal the debug logic to stop the CPU core, put the CPU core in debug wait state, cause a debug exception or save instruction trace information.

Big Endian and Little Endian Support

The embedded PPC405 core supports big endian or little endian byte ordering for instructions stored in external memory. Since the PowerPC architecture is big endian internally, the ICU rearranges the instructions stored as little endian into the big endian format. Therefore, the instruction cache always contains instructions in big endian format so that the byte ordering is correct for the execution unit. This feature allows the 405 core to be used in systems designed to function in a little endian environment.

Functional Description: FPGA

Input/Output Blocks (IOBs)

Virtex-II Pro I/O blocks (IOBs) are provided in groups of two or four on the perimeter of each device. Each IOB can be used as input and/or output for single-ended I/Os. Two IOBs can be used as a differential pair. A differential pair is always connected to the same switch matrix, as shown in Figure 18.

IOB blocks are designed for high-performance I/O, supporting 22 single-ended standards, as well as differential signaling with LVDS, LDT, bus LVDS, and LVPECL.

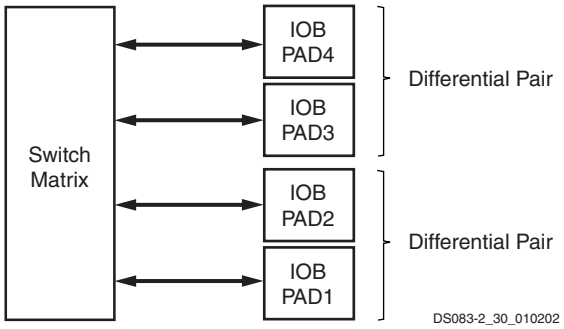

Figure 18: **Virtex-II Pro Input/Output Tile**

Note: Differential I/Os must use the same clock.

Supported I/O Standards

Virtex-II Pro IOB blocks feature SelectIO-Ultra inputs and outputs that support a wide variety of I/O signaling standards. In addition to the internal supply voltage (V_{CCINT} = 1.5V), output driver supply voltage (V_{CCO}) is dependent on the I/O standard (see Table 8 and Table 9). An auxiliary supply voltage (V_{CCAUX} = 2.5V) is required, regardless of the I/O standard used. For exact supply voltage absolute maximum ratings, see Virtex-II Pro and Virtex-II Pro X Platform FPGAs: DC and Switching Characteristics.

All of the user IOBs have fixed-clamp diodes to V_{CCO} and to ground. The IOBs are not compatible or compliant with 5V I/O standards (not 5V-tolerant).

Table 10 lists supported I/O standards with Digitally Controlled Impedance. See Digitally Controlled Impedance (DCI), page 31.

Table 8: **Supported Single-Ended I/O Standards**

IOSTANDARD Attribute	Output V_{CCO}	Input V_{CCO}	Input V_{REF}	Board Termination Voltage (V_{TT})
LVTTL(1)	3.3	3.3	N/R	N/R
LVCMOS33(1)	3.3	3.3	N/R	N/R
LVCMOS25	2.5	2.5	N/R	N/R
LVCMOS18	1.8	1.8	N/R	N/R
LVCMOS15	1.5	1.5	N/R	N/R
PCI33_3	Note (2)	Note (2)	N/R	N/R
PCI66_3	Note (2)	Note (2)	N/R	N/R
PCIX	Note (2)	Note (2)	N/R	N/R
GTL	Note (3)	Note (3)	0.8	1.2
GTLP	Note (3)	Note (3)	1.0	1.5
HSTL_I	1.5	N/R	0.75	0.75
HSTL_II	1.5	N/R	0.75	0.75
HSTL_III	1.5	N/R	0.9	1.5
HSTL_IV	1.5	N/R	0.9	1.5
HSTL_I_18	1.8	N/R	0.9	0.9
HSTL_II_18	1.8	N/R	0.9	0.9
HSTL_III _18	1.8	N/R	1.1	1.8
HSTL_IV_18	1.8	N/R	1.1	1.8
SSTL2_I	2.5	N/R	1.25	1.25
SSTL2_II	2.5	N/R	1.25	1.25
SSTL18_I (4)	1.8	N/R	0.9	0.9
SSTL18_II	1.8	N/R	0.9	0.9

Notes:
1. Refer to **XAPP659** for more details on interfacing to these 3.3V standards.
2. For PCI and PCI-X standards, refer to **XAPP653**.
3. V_{CCO} of GTL or GTLP should not be lower than the termination voltage or the voltage seen at the I/O pad. *Example:* If the pin High level is 1.5V, connect V_{CCO} to 1.5V.
4. SSTL18_I is not a JEDEC-supported standard.
5. N/R = no requirement.

Table 9: **Supported Differential Signal I/O Standards**

I/O Standard	Output V_{CCO}	Input V_{CCO}	Input V_{REF}	Output V_{OD}
LDT_25	2.5	N/R	N/R	0.500 – 0.740
LVDS_25	2.5	N/R	N/R	0.247 – 0.454
LVDSEXT_25	2.5	N/R	N/R	0.440 – 0.820
BLVDS_25	2.5	N/R	N/R	0.250 – 0.450
ULVDS_25	2.5	N/R	N/R	0.500 – 0.740
LVPECL_25	2.5	N/R	N/R	0.345 – 1.185
LDT_25_DT(1)	2.5	2.5	N/R	0.500 – 0.740
LVDS_25_DT(1)	2.5	2.5	N/R	0.247 – 0.454
LVDSEXT_25_DT(1)	2.5	2.5	N/R	0.330 – 0.700
ULVDS_25_DT(1)	2.5	2.5	N/R	0.500 – 0.740

Notes:
1. These standards support on-chip 100Ω termination.
2. N/R = no requirement.

Table 10: **Supported DCI I/O Standards**

I/O Standard	Output V_{CCO}	Input V_{CCO}	Input V_{REF}	Termination Type
LVDCI_33(1)	3.3	3.3	N/R	Series
LVDCI_25	2.5	2.5	N/R	Series
LVDCI_DV2_25	2.5	2.5	N/R	Series
LVDCI_18	1.8	1.8	N/R	Series
LVDCI_DV2_18	1.8	1.8	N/R	Series
LVDCI_15	1.5	1.5	N/R	Series
LVDCI_DV2_15	1.5	1.5	N/R	Series
GTL_DCI	1.2	1.2	0.8	Single
GTLP_DCI	1.5	1.5	1.0	Single
HSTL_I_DCI	1.5	1.5	0.75	Split
HSTL_II_DCI	1.5	1.5	0.75	Split
HSTL_III_DCI	1.5	1.5	0.9	Single
HSTL_IV_DCI	1.5	1.5	0.9	Single
HSTL_I_DCI_18	1.8	1.8	0.9	Split
HSTL_II_DCI_18	1.8	1.8	0.9	Split
HSTL_III_DCI_18	1.8	1.8	1.1	Single
HSTL_IV_DCI_18	1.8	1.8	1.1	Single
SSTL2_I_DCI(2)	2.5	2.5	1.25	Split
SSTL2_II_DCI(2)	2.5	2.5	1.25	Split
SSTL18_I_DCI (3)	1.8	1.8	0.9	Split
SSTL18_II_DCI	1.8	1.8	0.9	Split

Table 10: **Supported DCI I/O Standards *(Continued)***

I/O Standard	Output V_{CCO}	Input V_{CCO}	Input V_{REF}	Termination Type
LVDS_25_DCI	2.5	2.5	N/R	Split
LVDSEXT_25_DCI	2.5	2.5	N/R	Split

Notes:
1. LVDCI_XX is LVCMOS output controlled impedance buffers, matching all or half of the reference resistors.
2. These are SSTL compatible.
3. SSTL18_I is not a JEDEC-supported standard.
4. N/R = no requirement.

Logic Resources

IOB blocks include six storage elements, as shown in Figure 19.

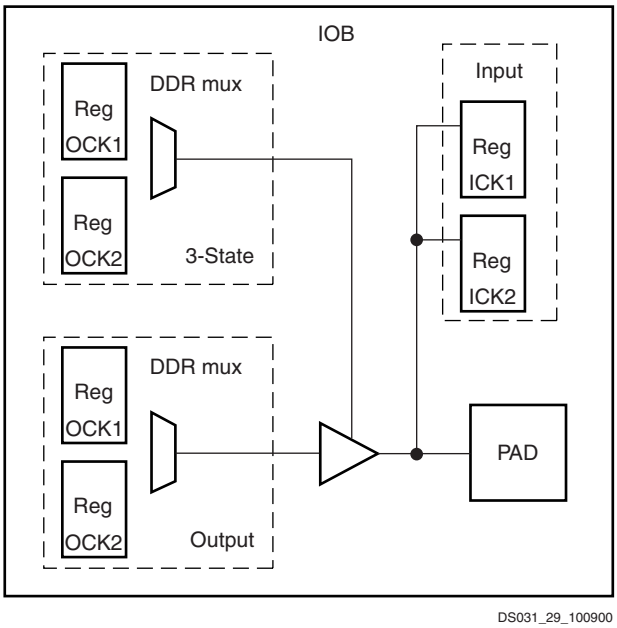

Figure 19: **Virtex-II Pro IOB Block**

Each storage element can be configured either as an edge-triggered D-type flip-flop or as a level-sensitive latch. On the input, output, and 3-state path, one or two DDR registers can be used.

Double data rate is directly accomplished by the two registers on each path, clocked by the rising edges (or falling edges) from two different clock nets. The two clock signals are generated by the DCM and must be 180 degrees out of phase, as shown in Figure 20. There are two input, output, and 3-state data signals, each being alternately clocked out.

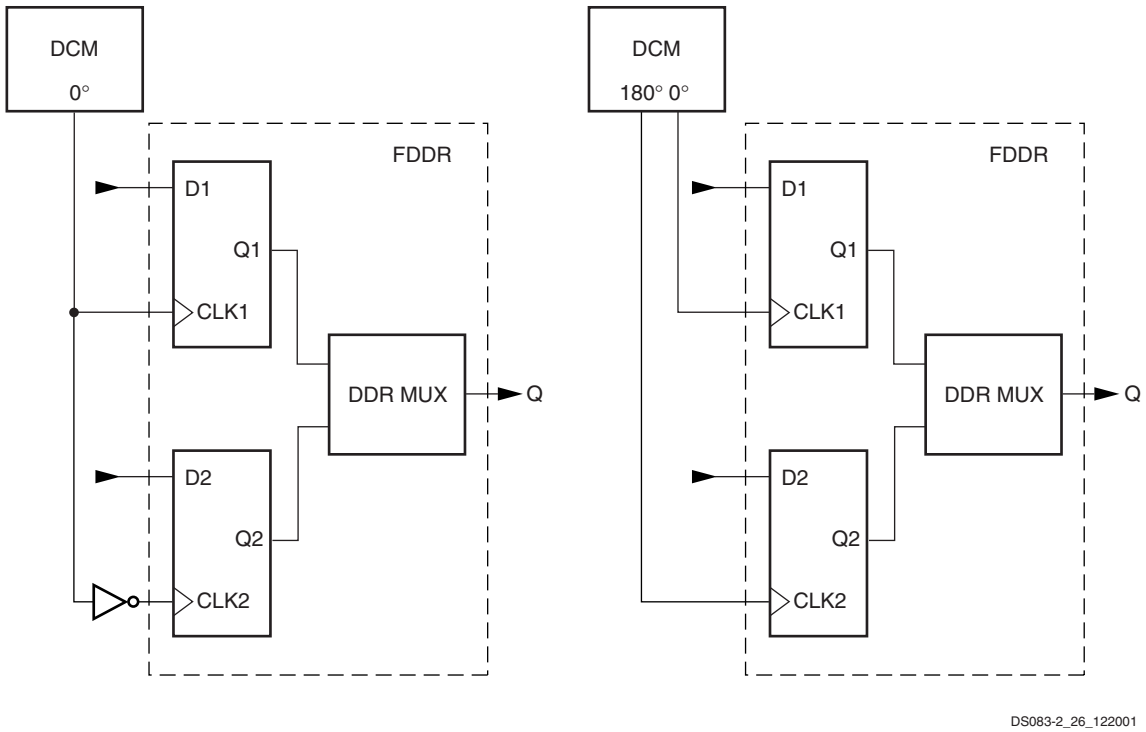

Figure 20: **Double Data Rate Registers**

This DDR mechanism can be used to mirror a copy of the clock on the output. This is useful for propagating a clock along the data that has an identical delay. It is also useful for multiple clock generation, where there is a unique clock driver for every clock load. Virtex-II Pro devices can produce many copies of a clock with very little skew.

Each group of two registers has a clock enable signal (ICE for the input registers, OCE for the output registers, and TCE for the 3-state registers). The clock enable signals are active High by default. If left unconnected, the clock enable for that storage element defaults to the active state.

Each IOB block has common synchronous or asynchronous set and reset (SR and REV signals). Two neighboring IOBs have a shared routing resource connecting the ICLK and OTCLK pins on pairs of IOBs. If two adjacent IOBs using DDR registers do not share the same clock signals on their clock pins (ICLK1, ICLK2, OTCLK1, and OTCLK2), one of the clock signals will be unroutable.

The IOB pairing is identical to the LVDS IOB pairs. Hence, the package pin-out table can also be used for pin assignment to avoid conflict.

SR forces the storage element into the state specified by the SRHIGH or SRLOW attribute. SRHIGH forces a logic 1. SRLOW forces a logic “0”. When SR is used, a second input (REV) forces the storage element into the opposite state. The reset condition predominates over the set condition. The initial state after configuration or global initialization state is defined by a separate INIT0 and INIT1 attribute. By default, the SRLOW attribute forces INIT0, and the SRHIGH attribute forces INIT1.

For each storage element, the SRHIGH, SRLOW, INIT0, and INIT1 attributes are independent. Synchronous or asynchronous set / reset is consistent in an IOB block.

All the control signals have independent polarity. Any inverter placed on a control input is automatically absorbed.

Each register or latch, independent of all other registers or latches, can be configured as follows:

- No set or reset
- Synchronous set
- Synchronous reset
- Synchronous set and reset
- Asynchronous set (preset)
- Asynchronous reset (clear)
- Asynchronous set and reset (preset and clear)

The synchronous reset overrides a set, and an asynchronous clear overrides a preset.

Refer to Figure 21.

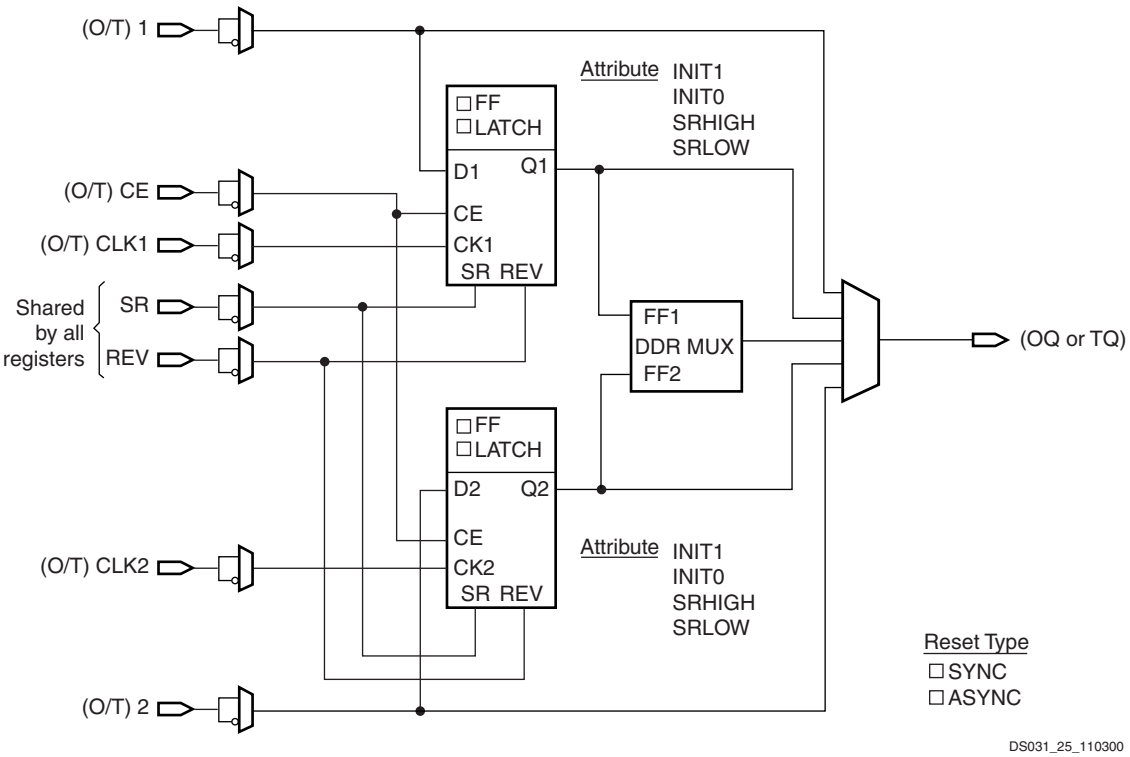

Figure 21: **Register / Latch Configuration in an IOB Block**

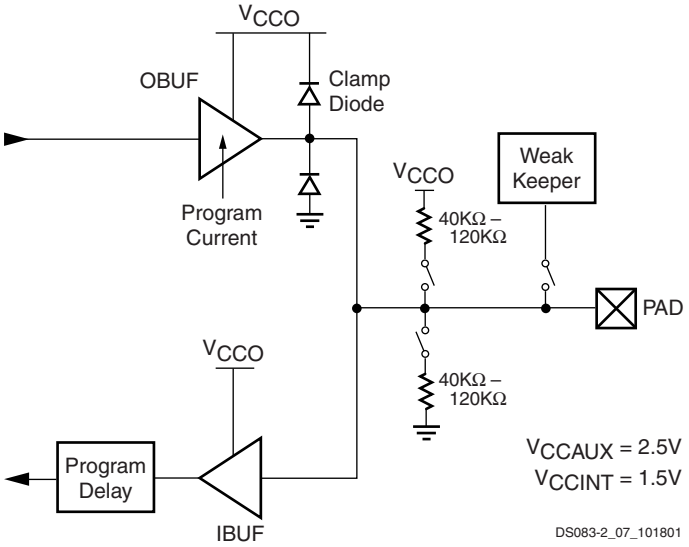

Figure 22: **LVTTL, LVCMOS, or PCI SelectIO-Ultra Standard**

Input/Output Individual Options

Each device pad has optional pull-up/pull-down resistors and weak-keeper circuit in the LVTTL, LVCMOS, and PCI SelectIO-Ultra configurations, as illustrated in Figure 22. Values of the optional pull-up and pull-down resistors fall within a range of 40 KΩ to 120 KΩ when V_{CCO} = 2.5V (from 2.38V to 2.63V only). The clamp diodes are always present, even when power is not.

The optional weak-keeper circuit is connected to each user I/O pad. When selected, the circuit monitors the voltage on the pad and weakly drives the pin High or Low. If the pin is connected to a multiple-source signal, the weak-keeper holds the signal in its last state if all drivers are disabled. Maintaining a valid logic level in this way eliminates bus chatter. An enabled pull-up or pull-down overrides the weak-keeper circuit.

LVCMOS25 sinks and sources current up to 24 mA. The current is programmable (see Table 11). Drive strength and slew rate controls for each output driver minimize bus transients. For LVDCI and LVDCI_DV2 standards, drive strength and slew rate controls are not available.

Table 11: **LVCMOS Programmable Currents (Sink and Source)**

SelectIO-Ultra	Programmable Current (Worst-Case Guaranteed Minimum)						
LVTTL	2 mA	4 mA	6 mA	8 mA	12 mA	16 mA	24 mA
LVCMOS33	2 mA	4 mA	6 mA	8 mA	12 mA	16 mA	24 mA
LVCMOS25	2 mA	4 mA	6 mA	8 mA	12 mA	16 mA	24 mA
LVCMOS18	2 mA	4 mA	6 mA	8 mA	12 mA	16 mA	n/a
LVCMOS15	2 mA	4 mA	6 mA	8 mA	12 mA	16 mA	n/a

Figure 23 shows the SSTL2, SSTL18, and HSTL configurations. HSTL can sink current up to 48 mA. (HSTL IV)

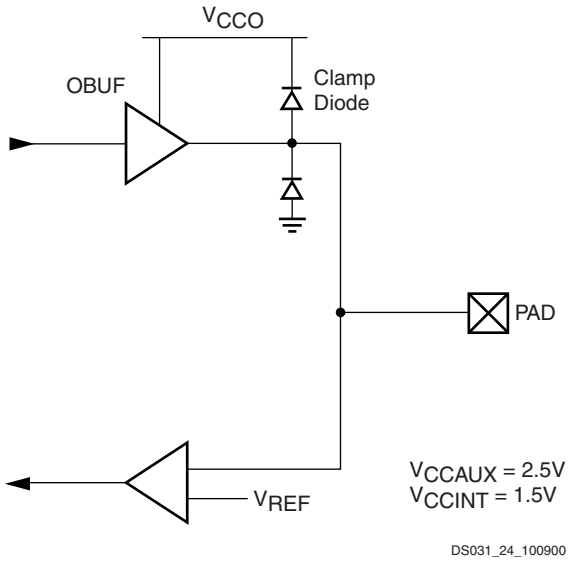

Figure 23: **SSTL or HSTL SelectIO-Ultra Standards**

All pads are protected against damage from electrostatic discharge (ESD) and from over-voltage transients. Virtex-II Pro uses two memory cells to control the configuration of an I/O as an input. This is to reduce the probability of an I/O configured as an input from flipping to an output when subjected to a single event upset (SEU) in space applications.

Prior to configuration, all outputs not involved in configuration are forced into their high-impedance state. The pull-down resistors and the weak-keeper circuits are inactive. The dedicated pin HSWAP_EN controls the pull-up resistors prior to configuration. By default, HSWAP_EN is set High, which disables the pull-up resistors on user I/O pins. When HSWAP_EN is set Low, the pull-up resistors are activated on user I/O pins.

All Virtex-II Pro IOBs (except RocketIO transceiver pins) support IEEE 1149.1 and IEEE 1532 compatible Boundary-Scan testing.

Input Path

The Virtex-II Pro IOB input path routes input signals directly to internal logic and / or through an optional input flip-flop or latch, or through the DDR input registers. An optional delay element at the D-input of the storage element eliminates pad-to-pad hold time. The delay is matched to the internal clock-distribution delay of the Virtex-II Pro device, and when used, assures that the pad-to-pad hold time is zero.

Each input buffer can be configured to conform to any of the low-voltage signaling standards supported. In some of these standards the input buffer utilizes a user-supplied threshold voltage, V_{REF}. The need to supply V_{REF} imposes constraints on which standards can be used in the same bank. See I/O banking description.

Output Path

The output path includes a 3-state output buffer that drives the output signal onto the pad. The output and / or the 3-state signal can be routed to the buffer directly from the internal logic or through an output / 3-state flip-flop or latch, or through the DDR output / 3-state registers.

Each output driver can be individually programmed for a wide range of low-voltage signaling standards. In most signaling standards, the output High voltage depends on an externally supplied V_{CCO} voltage. The need to supply V_{CCO} imposes constraints on which standards can be used in the same bank. See I/O banking description.

I/O Banking

Some of the I/O standards described above require V_{CCO} and V_{REF} voltages. These voltages are externally supplied and connected to device pins that serve groups of IOB blocks, called banks. Consequently, restrictions exist about which I/O standards can be combined within a given bank.

Eight I/O banks result from dividing each edge of the FPGA into two banks, as shown in Figure 24 and Figure 25. Each bank has multiple V_{CCO} pins, all of which must be connected to the same voltage. This voltage is determined by the output standards in use.

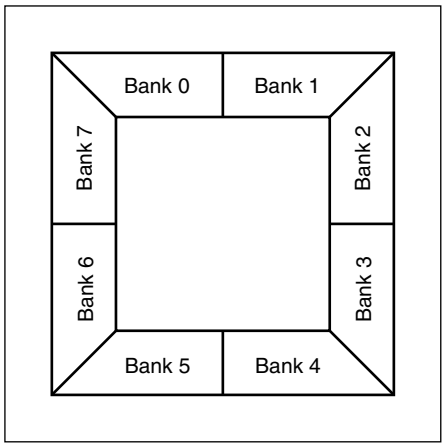

Figure 24: **I/O Banks: Wire-Bond Packages (FG) Top View**

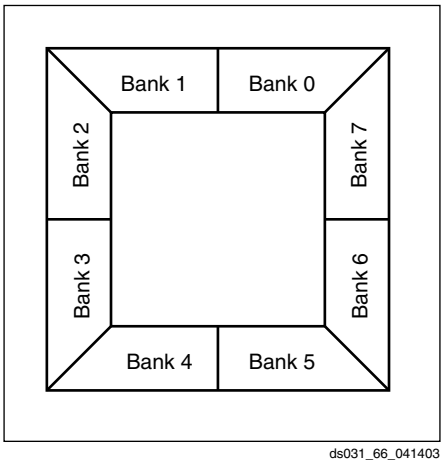

Figure 25: **I/O Banks: Flip-Chip Packages (FF) Top View**

Some input standards require a user-supplied threshold voltage (V_{REF}), and certain user-I/O pins are automatically configured as V_{REF} inputs. Approximately one in six of the I/O pins in the bank assume this role.

V_{REF} pins within a bank are interconnected internally, thus only one V_{REF} voltage can be used within each bank. However, for correct operation, all V_{REF} pins in the bank must be connected to the external reference voltage source.

The V_{CCO} and the V_{REF} pins for each bank appear in the device pinout tables. Within a given package, the number of V_{REF} and V_{CCO} pins can vary depending on the size of device. In larger devices, more I/O pins convert to V_{REF} pins. Since these are always a superset of the V_{REF} pins used for smaller devices, it is possible to design a PCB that permits migration to a larger device if necessary.

All V_{REF} pins for the largest device anticipated must be connected to the V_{REF} voltage and not used for I/O. In smaller devices, some V_{CCO} pins used in larger devices do not connect within the package. These unconnected pins can be left unconnected externally, or, if necessary, they can be connected to V_{CCO} to permit migration to a larger device.

Rules for Combining I/O Standards in the Same Bank

The following rules must be obeyed to combine different input, output, and bi-directional standards in the same bank:

1. **Combining output standards only.** Output standards with the same output V_{CCO} requirement can be combined in the same bank.
   Compatible example:
   SSTL2_I and LVDS_25 outputs
   Incompatible example:
   SSTL2_I (output V_{CCO} = 2.5V) and
   LVCMOS33 (output V_{CCO} = 3.3V) outputs
2. **Combining input standards only.** Input standards with the same input V_{CCO} and input V_{REF} requirements can be combined in the same bank.
   Compatible example:
   LVCMOS15 and HSTL_IV inputs
   Incompatible example:
   LVCMOS15 (input V_{CCO} = 1.5V) and
   LVCMOS18 (input V_{CCO} = 1.8V) inputs
   Incompatible example:
   HSTL_I_DCI_18 (V_{REF} = 0.9V) and
   HSTL_IV_DCI_18 (V_{REF} = 1.1V) inputs
3. **Combining input standards and output standards.** Input standards and output standards with the same input V_{CCO} and output V_{CCO} requirement can be combined in the same bank.
   Compatible example:
   LVDS_25 output and HSTL_I input
   Incompatible example:
   LVDS_25 output (output V_{CCO} = 2.5V) and
   HSTL_I_DCI_18 input (input V_{CCO} = 1.8V)
4. **Combining bi-directional standards with input or output standards.** When combining bi-directional I/O with other standards, make sure the bi-directional standard can meet rules 1 through 3 above.
5. **Additional rules for combining DCI I/O standards.**
   a. No more than one Single Termination type (input or output) is allowed in the same bank.
      Incompatible example:
      HSTL_IV_DCI input and HSTL_III_DCI input
   b. No more than one Split Termination type (input or output) is allowed in the same bank.
      Incompatible example:
      HSTL_I_DCI input and HSTL_II_DCI input

The implementation tools will enforce the above design rules.

Table 12, page 30, summarizes all standards and voltage supplies.

XC2VP2-6FF672C Xilinx Inc. IC FPGA 204 I/O 672FCBGA

Table 12: **Summary of Voltage Supply Requirements for All Input and Output Standards**

I/O Standard	V_{CCO}		V_{REF}	Termination Type	
	Output	Input	Input	Output	Input
LVTTL(1)	3.3	3.3	N/R	N/R	N/R
LVCMOS33(1)			N/R	N/R	N/R
LVDCI_33(1)			N/R	Series	N/R
PCIX(2)			N/R	N/R	N/R
PCI33_3(2)			N/R	N/R	N/R
PCI66_3(2)			N/R	N/R	N/R
LVDS_25	2.5	Note (3)	N/R	N/R	N/R
LVDSEXT_25			N/R	N/R	N/R
LDT_25			N/R	N/R	N/R
ULVDS_25			N/R	N/R	N/R
BLVDS_25			N/R	N/R	N/R
LVPECL_25			N/R	N/R	N/R
SSTL2_I			1.25	N/R	N/R
SSTL2_II			1.25	N/R	N/R
LVCMOS25		2.5	N/R	N/R	N/R
LVDCI_25			N/R	Series	N/R
LVDCI_DV2_25			N/R	Series	N/R
LVDS_25_DCI			N/R	N/R	Split
LVDSEXT_25_DCI			N/R	N/R	Split
SSTL2_I_DCI			1.25	N/R	Split
SSTL2_II_DCI			1.25	Split	Split
LVDS_25_DT			N/R	N/R	N/R
LVDSEXT_25_DT			N/R	N/R	N/R
LDT_25_DT			N/R	N/R	N/R
ULVDS_25_DT			N/R	N/R	N/R

Table 12: **Summary of Voltage Supply Requirements for All Input and Output Standards *(Continued)***

I/O Standard	V_{CCO}		V_{REF}	Termination Type	
	Output	Input	Input	Output	Input
HSTL_III_18	1.8	Note (3)	1.1	N/R	N/R
HSTL_IV_18			1.1	N/R	N/R
HSTL_I_18			0.9	N/R	N/R
HSTL_II_18			0.9	N/R	N/R
SSTL18_I			0.9	N/R	N/R
SSTL18_II			0.9	N/R	N/R
LVCMOS18		1.8	N/R	N/R	N/R
LVDCI_18			N/R	Series	N/R
LVDCI_DV2_18			N/R	Series	N/R
HSTL_III_DCI_18			1.1	N/R	Single
HSTL_IV_DCI_18			1.1	Single	Single
HSTL_I_DCI_18			0.9	N/R	Split
HSTL_II_DCI_18			0.9	Split	Split
SSTL18_I_DCI			0.9	N/R	Split
SSTL18_II_DCI			0.9	Split	Split
HSTL_III	1.5	Note (3)	0.9	N/R	N/R
HSTL_IV			0.9	N/R	N/R
HSTL_I			0.75	N/R	N/R
HSTL_II			0.75	N/R	N/R
LVCMOS15		1.5	N/R	N/R	N/R
LVDCI_15			N/R	Series	N/R
LVDCI_DV2_15			N/R	Series	N/R
GTLP_DCI			1	Single	Single
HSTL_III_DCI			0.9	N/R	Single
HSTL_IV_DCI			0.9	Single	Single
HSTL_I_DCI			0.75	N/R	Split
HSTL_II_DCI			0.75	Split	Split
GTL_DCI	1.2	1.2	0.8	Single	Single
GTLP	N/R	Note (3)	1	N/R	N/R
GTL			0.8	N/R	N/R

Notes:
1. See application note **XAPP659** for more detailed information.
2. See application note **XAPP653** for more detailed information.
3. Pin voltage must not exceed V_{CCO}.
4. N/R = no requirement.

Digitally Controlled Impedance (DCI)

Today's chip output signals with fast edge rates require termination to prevent reflections and maintain signal integrity. High pin count packages (especially ball grid arrays) can not accommodate external termination resistors.

Virtex-II Pro XCITE DCI provides controlled impedance drivers and on-chip termination for single-ended and differential I/Os. This eliminates the need for external resistors and improves signal integrity. The DCI feature can be used on any IOB by selecting one of the DCI I/O standards.

When applied to inputs, DCI provides input parallel termination. When applied to outputs, DCI provides controlled impedance drivers (series termination) or output parallel termination.

DCI operates independently on each I/O bank. When a DCI I/O standard is used in a particular I/O bank, external reference resistors must be connected to two dual-function pins on the bank. These resistors, voltage reference of N transistor (VRN) and the voltage reference of P transistor (VRP) are shown in Figure 26.

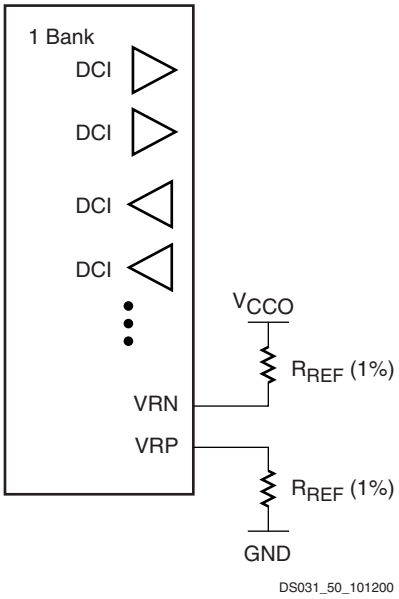

Figure 26: **DCI in a Virtex-II Pro Bank**

When used with a terminated I/O standard, the value of the resistors are specified by the standard (typically 50Ω). When used with a controlled impedance driver, the resistors set the output impedance of the driver within the specified range (20Ω to 100Ω). For all series and parallel terminations listed in Table 13 and Table 14, the reference resistors must have the same value for any given bank. One percent resistors are recommended.

The DCI system adjusts the I/O impedance to match the two external reference resistors, or half of the reference resistors, and compensates for impedance changes due to voltage and/or temperature fluctuations. The adjustment is done by turning parallel transistors in the IOB on or off.

Controlled Impedance Drivers (Series Termination)

DCI can be used to provide a buffer with a controlled output impedance. It is desirable for this output impedance to match the transmission line impedance (Z_0). Virtex-II Pro input buffers also support LVDCI and LVDCI_DV2.

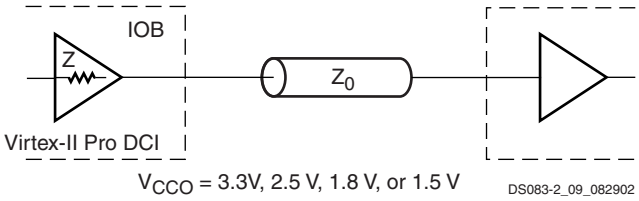

Figure 27: **Internal Series Termination**

Table 13: **SelectIO-Ultra Controlled Impedance Buffers**

V_{CCO}	DCI	DCI Half Impedance
3.3V	LVDCI_33	N/A
2.5V	LVDCI_25	LVDCI_DV2_25
1.8V	LVDCI_18	LVDCI_DV2_18
1.5V	LVDCI_15	LVDCI_DV2_15

Controlled Impedance Terminations (Parallel)

DCI also provides on-chip termination for SSTL2, SSTL18, HSTL (Class I, II, III, or IV), LVDS_25, LVDSEXT_25, and GTL/GTLP receivers or transmitters on bidirectional lines. Table 14 and Table 15 list the on-chip parallel terminations available in Virtex-II Pro devices. V_{CCO} must be set according to Table 10. There is a V_{CCO} requirement for GTL_DCI and GTLP_DCI, due to the on-chip termination resistor.

Table 14: **SelectIO-Ultra Buffers With On-Chip Parallel Termination**

I/O Standard Description	IOSTANDARD Attribute	
	External Termination	On-Chip Termination
SSTL Class I, 2.5V	SSTL2_I	SSTL2_I_DCI(1)
SSTL Class II, 2.5V	SSTL2_II	SSTL2_II_DCI(1)
SSTL Class I, 1.8V	SSTL18_I	SSTL18_I_DCI
SSTL Class II, 1.8V	SSTL18_II	SSTL18_II_DCI
HSTL Class I	HSTL_I	HSTL_I_DCI
HSTL Class I, 1.8V	HSTL_I_18	HSTL_I_DCI_18
HSTL Class II	HSTL_II	HSTL_II_DCI
HSTL Class II, 1.8V	HSTL_II_18	HSTL_II_DCI_18
HSTL Class III	HSTL_III	HSTL_III_DCI
HSTL Class III, 1.8V	HSTL_III_18	HSTL_III_DCI_18
HSTL Class IV	HSTL_IV	HSTL_IV_DCI
HSTL Class IV, 1.8V	HSTL_IV_18	HSTL_IV_DCI_18
GTL	GTL	GTL_DCI
GTL Plus	GTLP	GTLP_DCI

Notes:
1. SSTL compatible.

Table 15: **SelectIO-Ultra Differential Buffers With On-Chip Termination**

I/O Standard Description	IOSTANDARD Attribute	
	External Termination	On-Chip Termination
LVDS 2.5V	LVDS_25	LVDS_25_DCI
LVDS Extended 2.5V	LVDSEXT_25	LVDSEXT_25_DCI

Figure 28 provides examples illustrating the use of the HSTL_I_DCI, HSTL_II_DCI, HSTL_III_DCI, and HSTL_IV_DCI I/O standards. For a complete list, see the ***Virtex-II Pro Platform FPGA User Guide***.

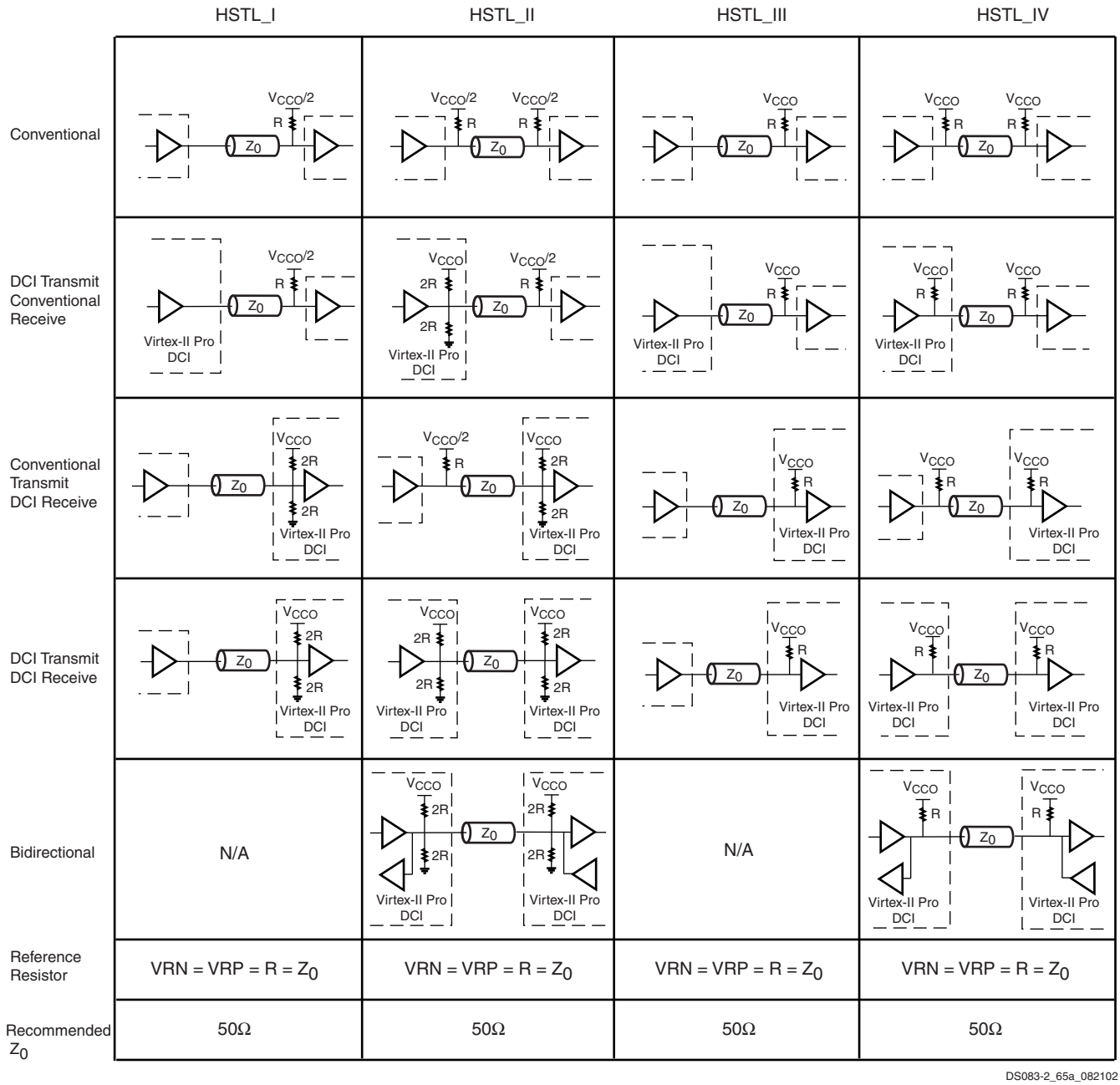

Figure 28: **HSTL DCI Usage Examples**

Figure 29 provides examples illustrating the use of the SSTL2_I_DCI, SSTL2_II_DCI, SSTL18_I_DCI, and SSTL18_II_DCI I/O standards. For a complete list, see the ***Virtex-II Pro Platform FPGA User Guide***.

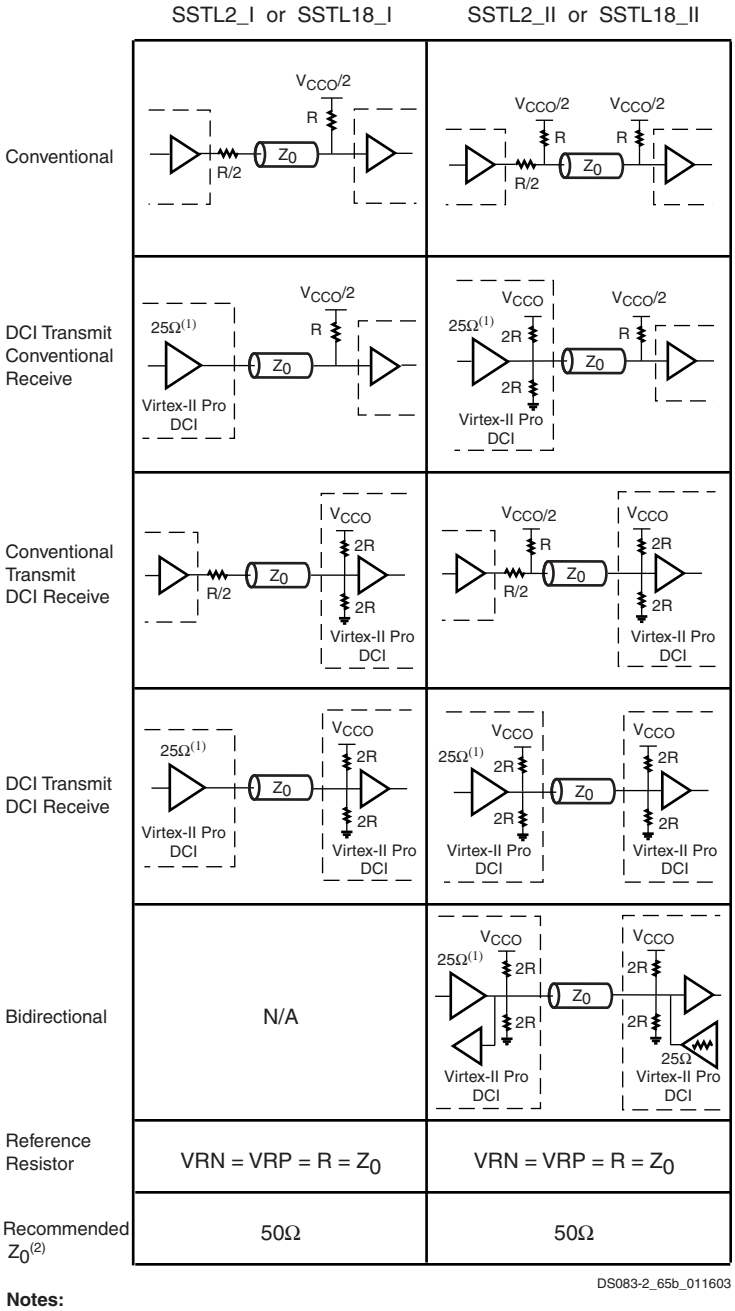

Notes:
1. The SSTL-compatible 25Ω series resistor is accounted for in the DCI buffer, and it is not DCI controlled.
2. Z_0 is the recommended PCB trace impedance.

Figure 29: **SSTL DCI Usage Examples**

Figure 30 provides examples illustrating the use of the LVDS_25_DCI and LVDSEXT_25_DCI I/O standards. For a complete list, see the ***Virtex-II Pro Platform FPGA User Guide***.

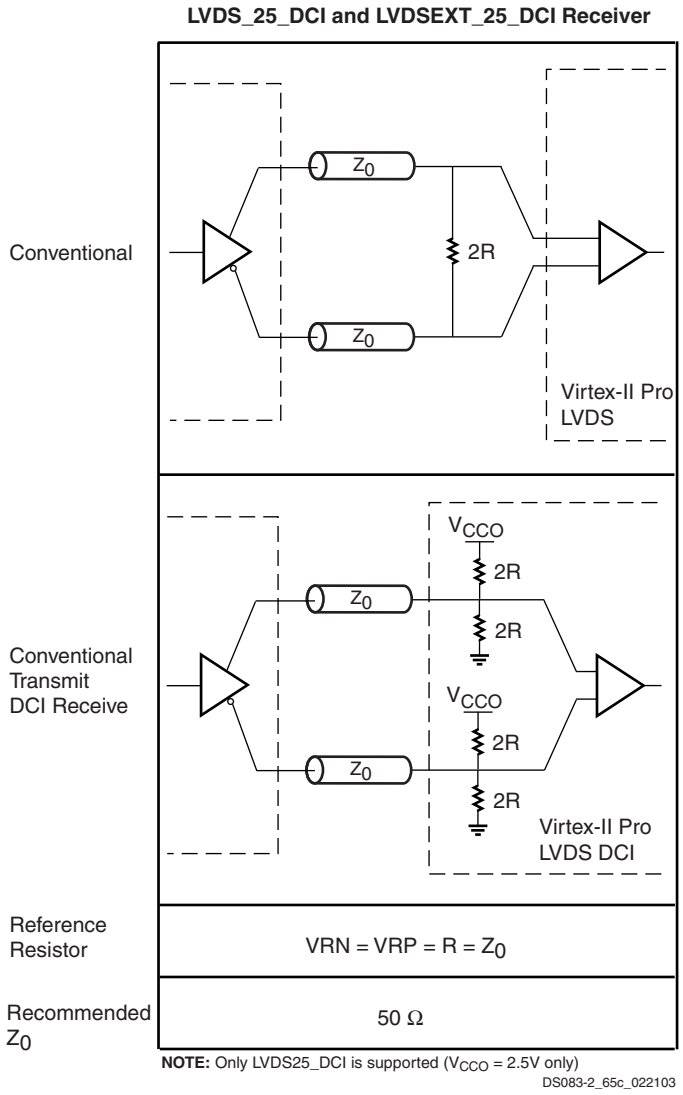

Figure 30: **LVDS DCI Usage Examples**

On-Chip Differential Termination

Virtex-II Pro provides a true 100Ω differential termination (DT) across the input differential receiver terminals. The LVDS_25_DT, LVDSEXT_25_DT, LDT_25_DT, and ULVDS_25_DT standards support on-chip differential termination.

The on-chip input differential termination in Virtex-II Pro provides major advantages over the external resistor or the DCI termination solution:

- Eliminates the stub at the receiver completely and therefore greatly improve signal integrity
- Consumes less power than DCI termination
- Supports LDT (not supported by DCI termination)
- Frees up VRP/VRN pins

Figure 31 provides examples illustrating the use of the LVDS_25_DT, LVDSEXT_25_DT, LDT_25_DT, and ULVDS_25_DT I/O standards. For further details, refer to **Solution Record 17244**. Also see the ***Virtex-II Pro Platform FPGA User Guide*** for more design information.

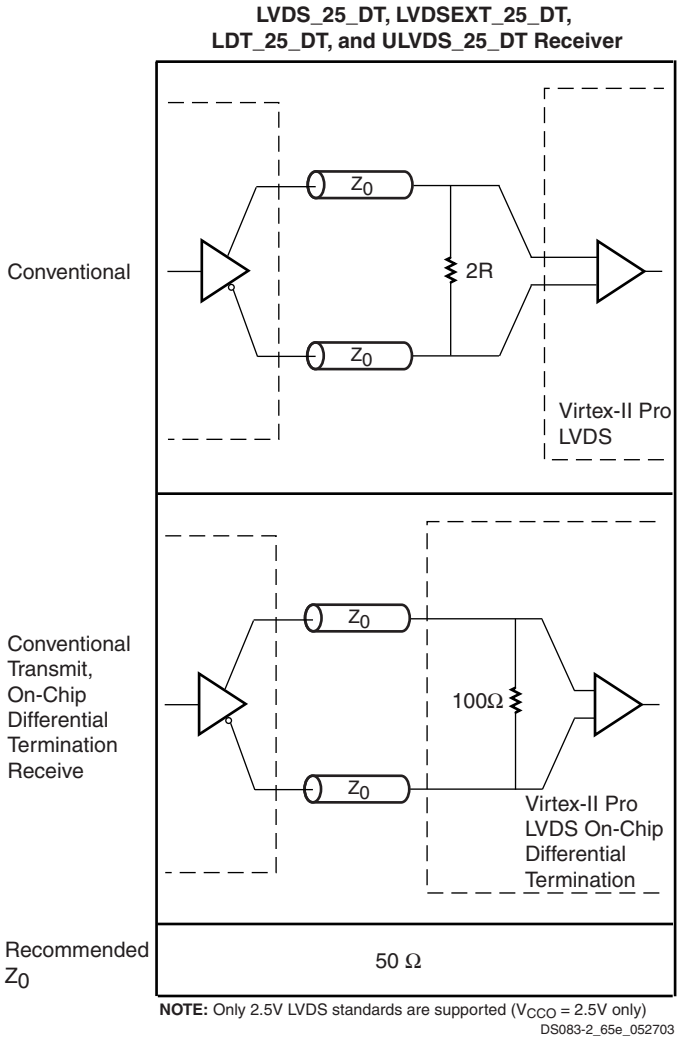

Figure 31: **LVDS Differential Termination Usage Examples**

Configurable Logic Blocks (CLBs)

The Virtex-II Pro configurable logic blocks (CLB) are organized in an array and are used to build combinatorial and synchronous logic designs. Each CLB element is tied to a switch matrix to access the general routing matrix, as shown in Figure 32. A CLB element comprises 4 similar slices, with fast local feedback within the CLB. The four slices are split in two columns of two slices with two independent carry logic chains and one common shift chain.

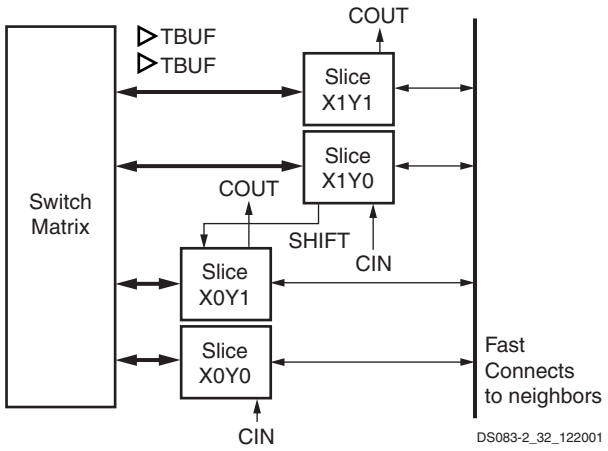

Figure 32: **Virtex-II Pro CLB Element**

Slice Description

Each slice includes two 4-input function generators, carry logic, arithmetic logic gates, wide function multiplexers and two storage elements. As shown in Figure 33, each 4-input function generator is programmable as a 4-input LUT, 16 bits of distributed SelectRAM+ memory, or a 16-bit variable-tap shift register element.

The output from the function generator in each slice drives both the slice output and the D input of the storage element. Figure 34 shows a more detailed view of a single slice.

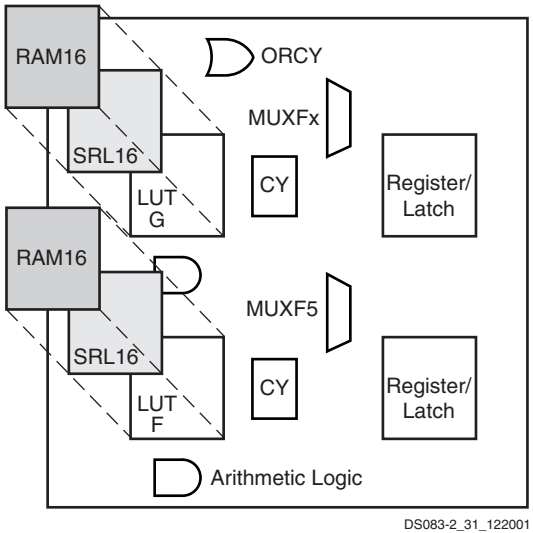

Figure 33: **Virtex-II Pro Slice Configuration**

Configurations

Look-Up Table

Virtex-II Pro function generators are implemented as 4-input look-up tables (LUTs). Four independent inputs are provided to each of the two function generators in a slice (F and G). These function generators are each capable of implementing any arbitrarily defined boolean function of four inputs. The propagation delay is therefore independent of the function implemented. Signals from the function generators can exit the slice (X or Y output), can input the XOR dedicated gate (see arithmetic logic), or input the carry-logic multiplexer (see fast look-ahead carry logic), or feed the D input of the storage element, or go to the MUXF5 (not shown in Figure 34).

In addition to the basic LUTs, the Virtex-II Pro slice contains logic (MUXF5 and MUXFX multiplexers) that combines function generators to provide any function of five, six, seven, or eight inputs. The MUXFX is either MUXF6, MUXF7, or MUXF8 according to the slice considered in the CLB. Selected functions up to nine inputs (MUXF5 multiplexer) can be implemented in one slice. The MUXFX can also be a MUXF6, MUXF7, or MUXF8 multiplexer to map any function of six, seven, or eight inputs and selected wide logic functions.

Register/Latch

The storage elements in a Virtex-II Pro slice can be configured either as edge-triggered D-type flip-flops or as level-sensitive latches. The D input can be directly driven by the X or Y output via the DX or DY input, or by the slice inputs bypassing the function generators via the BX or BY input. The clock enable signal (CE) is active High by default. If left unconnected, the clock enable for that storage element defaults to the active state.

In addition to clock (CK) and clock enable (CE) signals, each slice has set and reset signals (SR and BY slice inputs). SR forces the storage element into the state specified by the attribute SRHIGH or SRLOW. SRHIGH forces a logic 1 when SR is asserted. SRLOW forces a logic 0. When SR is used, an optional second input (BY) forces the storage element into the opposite state via the REV pin. The reset condition is predominant over the set condition. (See Figure 35.)

The initial state after configuration or global initial state is defined by a separate INIT0 and INIT1 attribute. By default, setting the SRLOW attribute sets INIT0, and setting the SRHIGH attribute sets INIT1. For each slice, set and reset can be set to be synchronous or asynchronous. Virtex-II Pro devices also have the ability to set INIT0 and INIT1 independent of SRHIGH and SRLOW.

The control signals clock (CLK), clock enable (CE) and set/reset (SR) are common to both storage elements in one slice. All of the control signals have independent polarity. Any inverter placed on a control input is automatically absorbed.

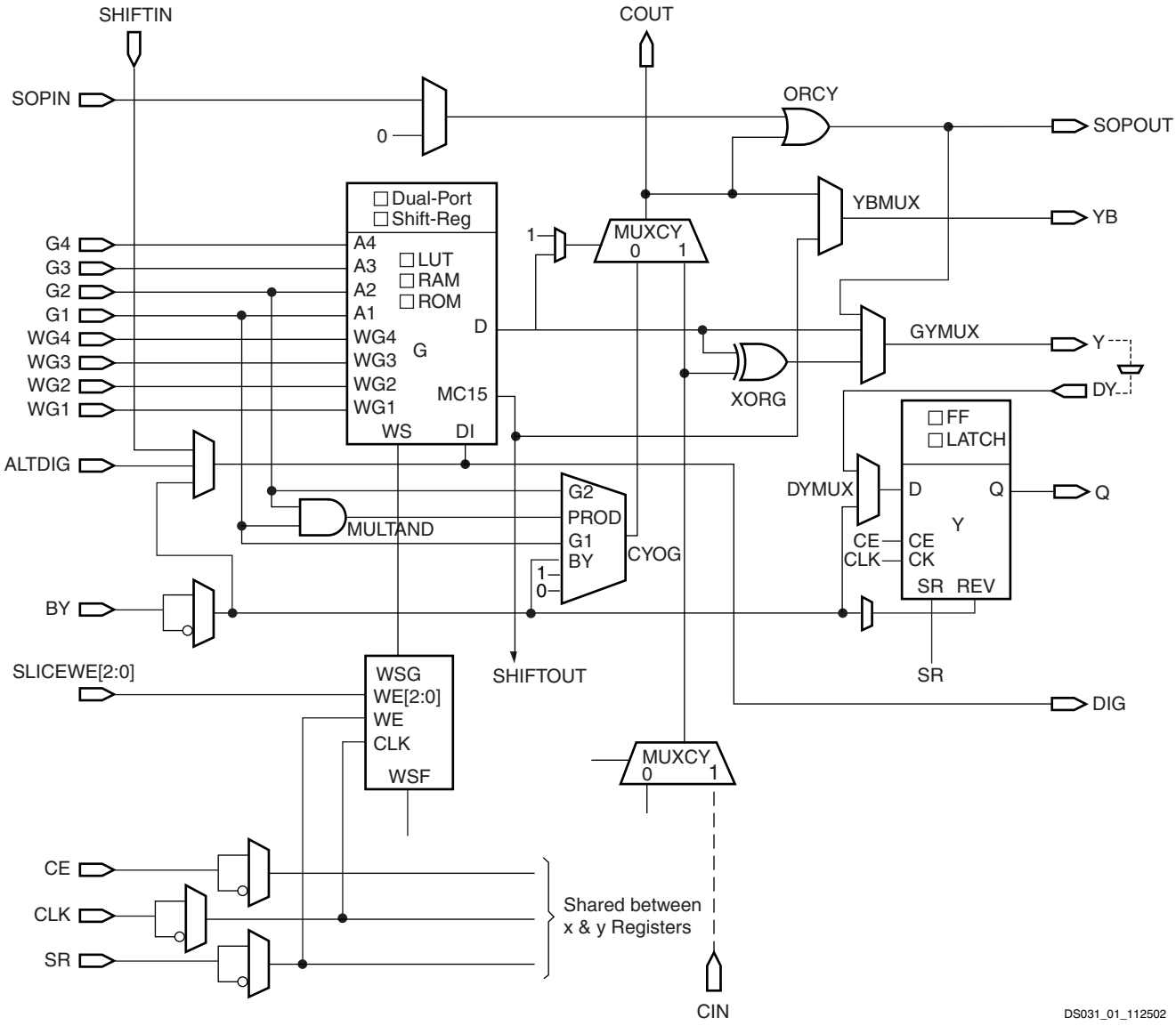

Figure 34: **Virtex-II Pro Slice (Top Half)**

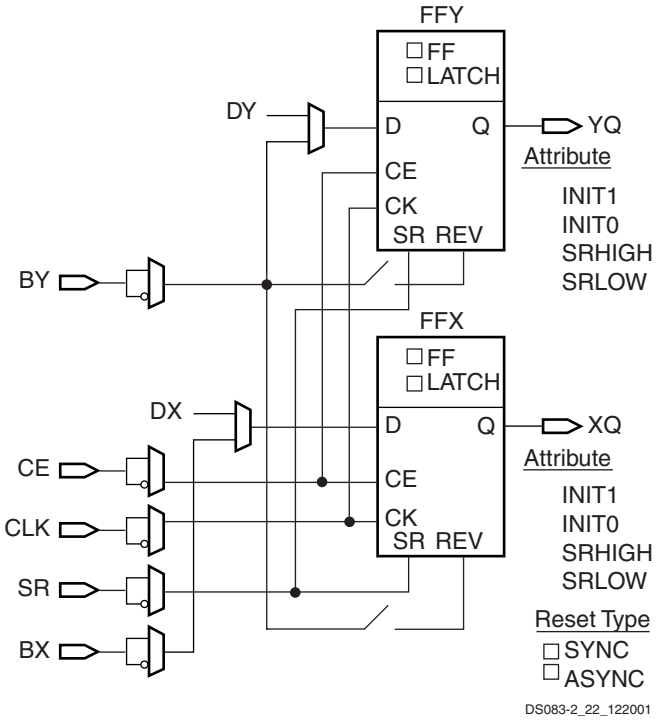

Figure 35: **Register / Latch Configuration in a Slice**

The set and reset functionality of a register or a latch can be configured as follows:

- No set or reset
- Synchronous set
- Synchronous reset
- Synchronous set and reset
- Asynchronous set (preset)
- Asynchronous reset (clear)
- Asynchronous set and reset (preset and clear)

The synchronous reset has precedence over a set, and an asynchronous clear has precedence over a preset.

Distributed SelectRAM+ Memory

Each function generator (LUT) can implement a 16 x 1-bit synchronous RAM resource called a distributed SelectRAM+ element. SelectRAM+ elements are configurable within a CLB to implement the following:

- Single-Port 16 x 8-bit RAM
- Single-Port 32 x 4-bit RAM
- Single-Port 64 x 2-bit RAM
- Single-Port 128 x 1-bit RAM
- Dual-Port 16 x 4-bit RAM
- Dual-Port 32 x 2-bit RAM
- Dual-Port 64 x 1-bit RAM

Distributed SelectRAM+ memory modules are synchronous (write) resources. The combinatorial read access time is extremely fast, while the synchronous write simplifies high-speed designs. A synchronous read can be implemented with a storage element in the same slice. The distributed SelectRAM+ memory and the storage element share the same clock input. A Write Enable (WE) input is active High, and is driven by the SR input.

Table 16 shows the number of LUTs (2 per slice) occupied by each distributed SelectRAM+ configuration.

Table 16: **Distributed SelectRAM+ Configurations**

RAM	Number of LUTs
16 x 1S	1
16 x 1D	2
32 x 1S	2
32 x 1D	4
64 x 1S	4
64 x 1D	8
128 x 1S	8

Notes:
1. S = single-port configuration; D = dual-port configuration

For single-port configurations, distributed SelectRAM+ memory has one address port for synchronous writes and asynchronous reads.

For dual-port configurations, distributed SelectRAM+ memory has one port for synchronous writes and asynchronous reads and another port for asynchronous reads. The function generator (LUT) has separated read address inputs (A1, A2, A3, A4) and write address inputs (WG1/WF1, WG2/WF2, WG3/WF3, WG4/WF4).

In single-port mode, read and write addresses share the same address bus. In dual-port mode, one function generator (R/W port) is connected with shared read and write addresses. The second function generator has the A inputs (read) connected to the second read-only port address and the W inputs (write) shared with the first read/write port

Figure 36, Figure 37, and Figure 38 illustrate various example configurations.

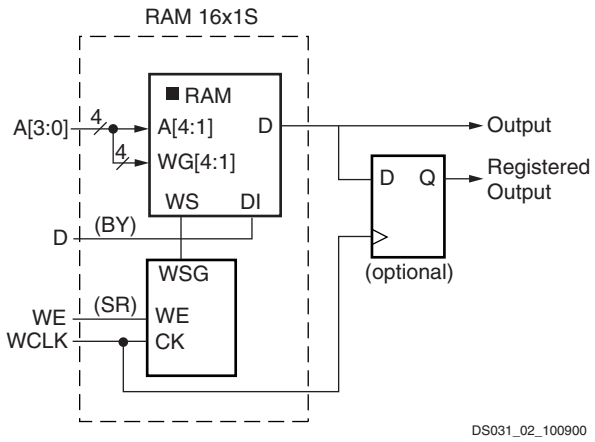

Figure 36: **Distributed SelectRAM+ (RAM16x1S)**

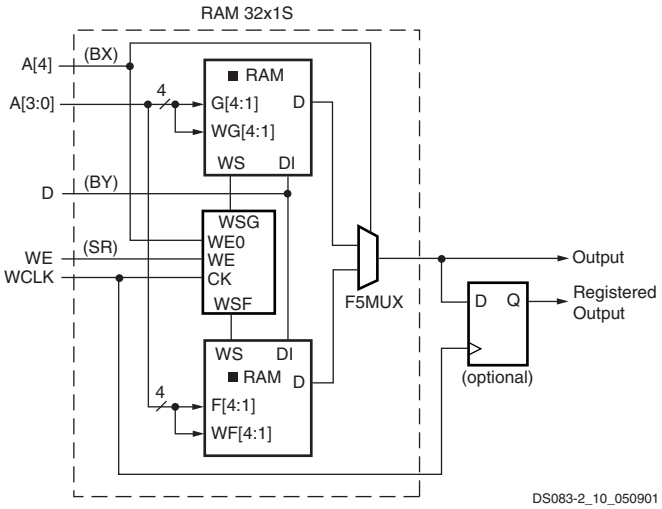

Figure 37: **Single-Port Distributed SelectRAM+ (RAM32x1S)**

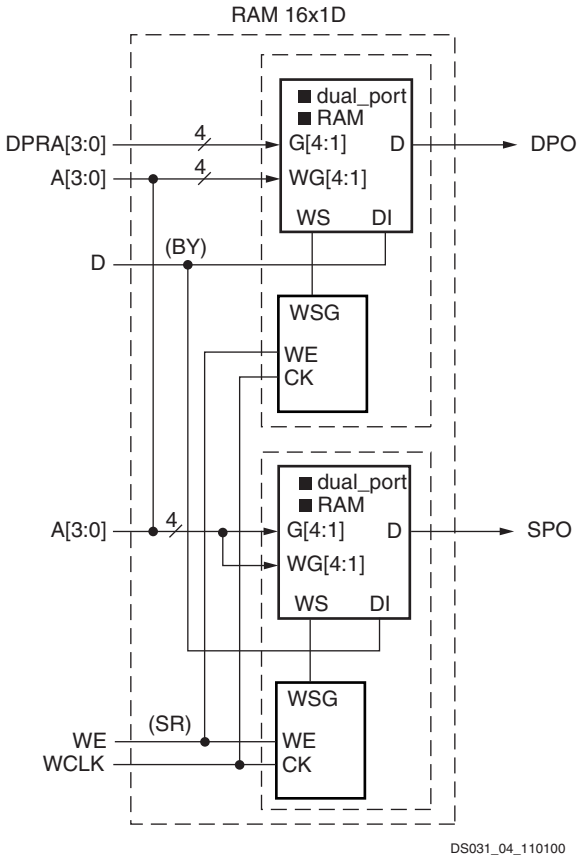

Figure 38: **Dual-Port Distributed SelectRAM+ (RAM16x1D)**

Similar to the RAM configuration, each function generator (LUT) can implement a 16 x 1-bit ROM. Five configurations are available: ROM16x1, ROM32x1, ROM64x1, ROM128x1, and ROM256x1. The ROM elements are cascadable to implement wider or/and deeper ROM. ROM contents are loaded at configuration. Table 17 shows the number of LUTs occupied by each configuration.

Table 17: **ROM Configuration**

ROM	Number of LUTs
16 x 1	1
32 x 1	2
64 x 1	4
128 x 1	8 (1 CLB)
256 x 1	16 (2 CLBs)

Shift Registers

Each function generator can also be configured as a 16-bit shift register. The write operation is synchronous with a clock input (CLK) and an optional clock enable, as shown in Figure 39. A dynamic read access is performed through the 4-bit address bus, A[3:0]. The configurable 16-bit shift register cannot be set or reset. The read is asynchronous; however, the storage element or flip-flop is available to implement a synchronous read. Any of the 16 bits can be read out asynchronously by varying the address. The storage element should always be used with a constant address. For example, when building an 8-bit shift register and configuring the addresses to point to the 7th bit, the 8th bit can be the flip-flop. The overall system performance is improved by using the superior clock-to-out of the flip-flops.

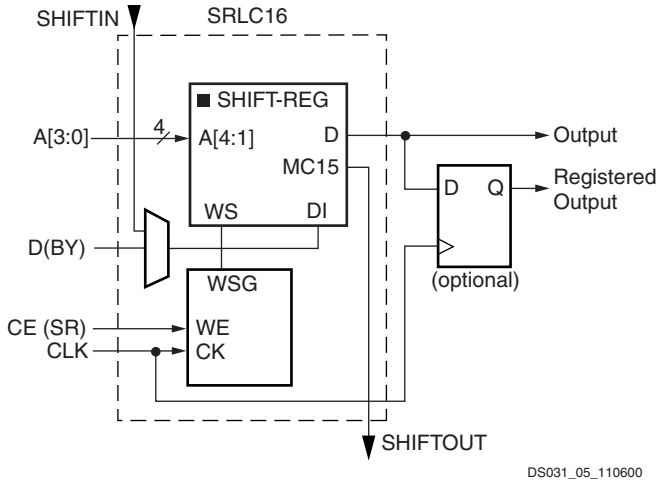

Figure 39: **Shift Register Configurations**

An additional dedicated connection between shift registers allows connecting the last bit of one shift register to the first bit of the next, without using the ordinary LUT output. (See Figure 40.) Longer shift registers can be built with dynamic access to any bit in the chain. The shift register chaining and the MUXF5, MUXF6, and MUXF7 multiplexers allow up to a 128-bit shift register with addressable access to be implemented in one CLB.

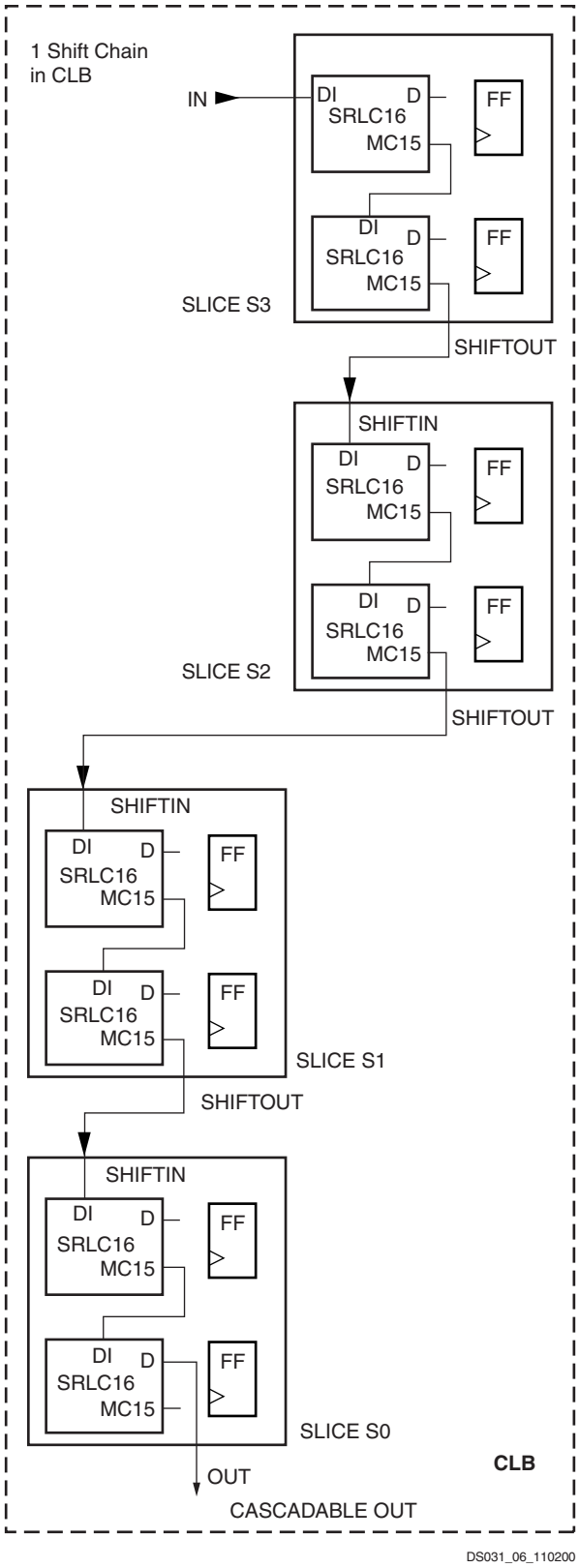

Figure 40: **Cascadable Shift Register**

Multiplexers

Virtex-II Pro function generators and associated multiplexers can implement the following:

- 4:1 multiplexer in one slice
- 8:1 multiplexer in two slices
- 16:1 multiplexer in one CLB element (4 slices)
- 32:1 multiplexer in two CLB elements (8 slices)

Each Virtex-II Pro slice has one MUXF5 multiplexer and one MUXFX multiplexer. The MUXFX multiplexer implements the MUXF6, MUXF7, or MUXF8, as shown in Figure 41. Each CLB element has two MUXF6 multiplexers, one MUXF7 multiplexer and one MUXF8 multiplexer. Examples of multiplexers are shown in the *Virtex-II Pro Platform FPGA User Guide*. Any LUT can implement a 2:1 multiplexer.

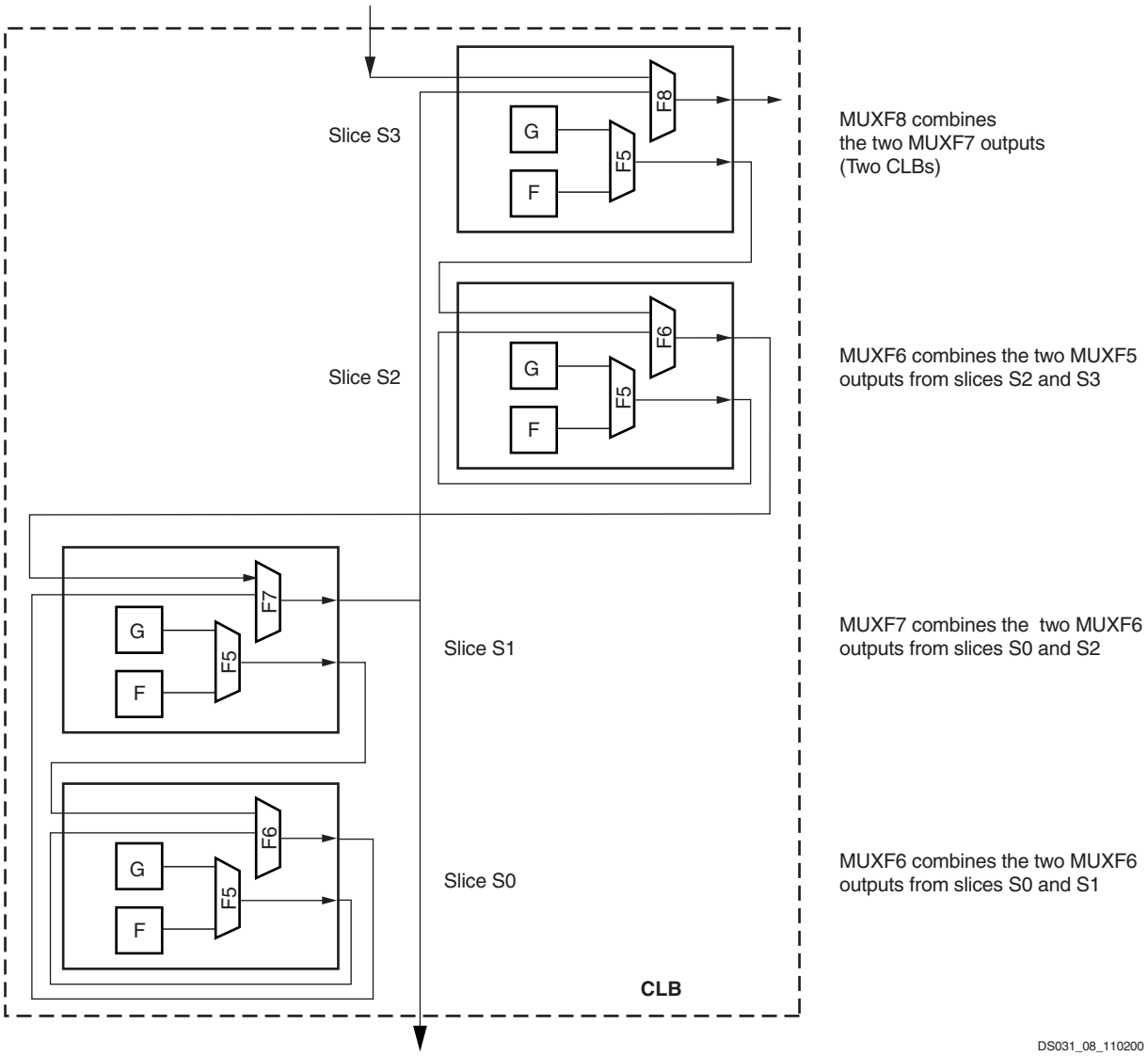

Figure 41: **MUXF5 and MUXFX multiplexers**

Fast Lookahead Carry Logic

Dedicated carry logic provides fast arithmetic addition and subtraction. The Virtex-II Pro CLB has two separate carry chains, as shown in the Figure 42.

The height of the carry chains is two bits per slice. The carry chain in the Virtex-II Pro device is running upward. The dedicated carry path and carry multiplexer (MUXCY) can also be used to cascade function generators for implementing wide logic functions.

Arithmetic Logic

The arithmetic logic includes an XOR gate that allows a 2-bit full adder to be implemented within a slice. In addition, a dedicated AND (MULT_AND) gate (shown in Figure 34) improves the efficiency of multiplier implementation.

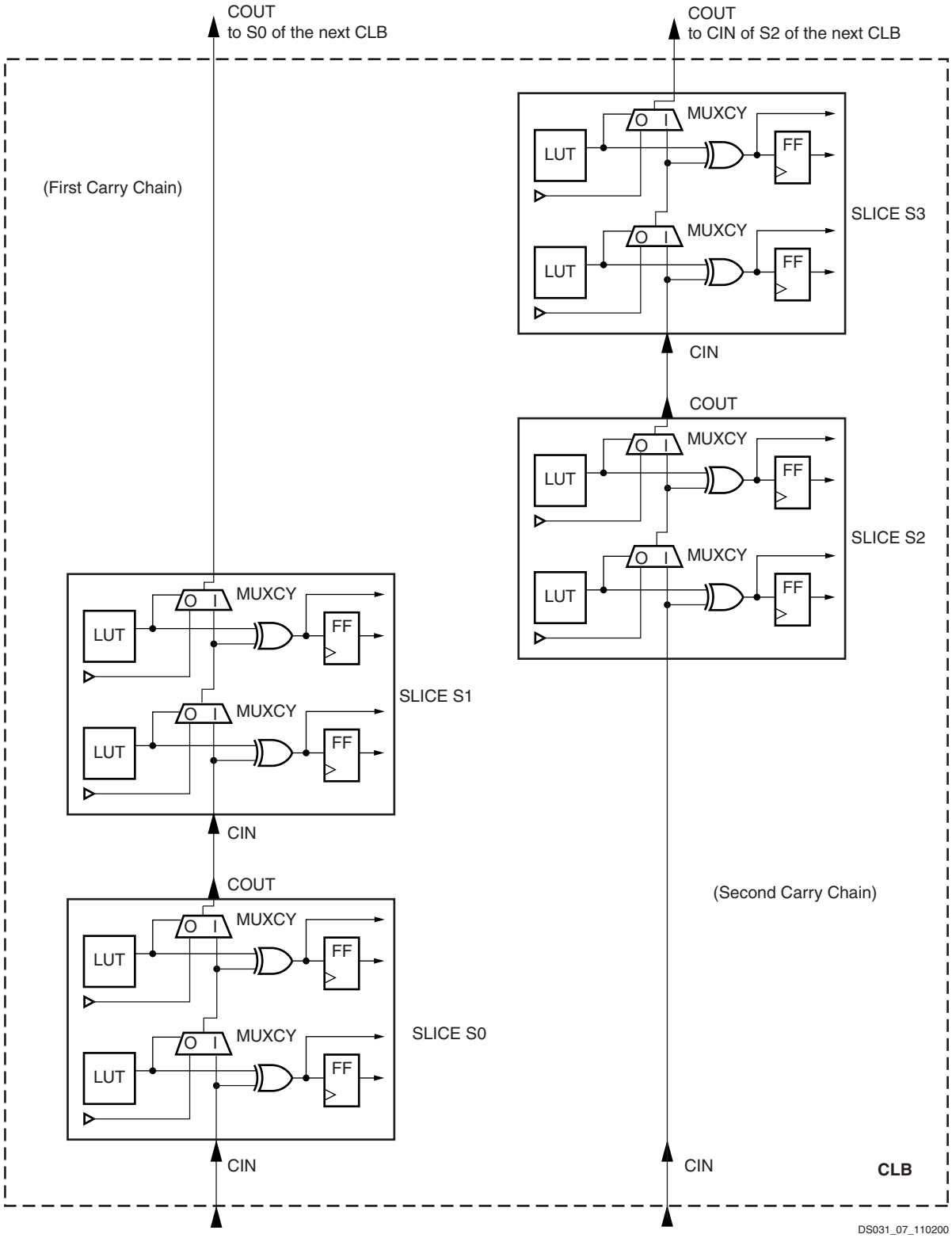

Figure 42: **Fast Carry Logic Path**

Sum of Products

Each Virtex-II Pro slice has a dedicated OR gate named ORCY, ORing together outputs from the slices carryout and the ORCY from an adjacent slice. The ORCY gate with the dedicated Sum of Products (SOP) chain are designed for implementing large, flexible SOP chains. One input of each ORCY is connected through the fast SOP chain to the output of the previous ORCY in the same slice row. The second input is connected to the output of the top MUXCY in the same slice, as shown in Figure 43.

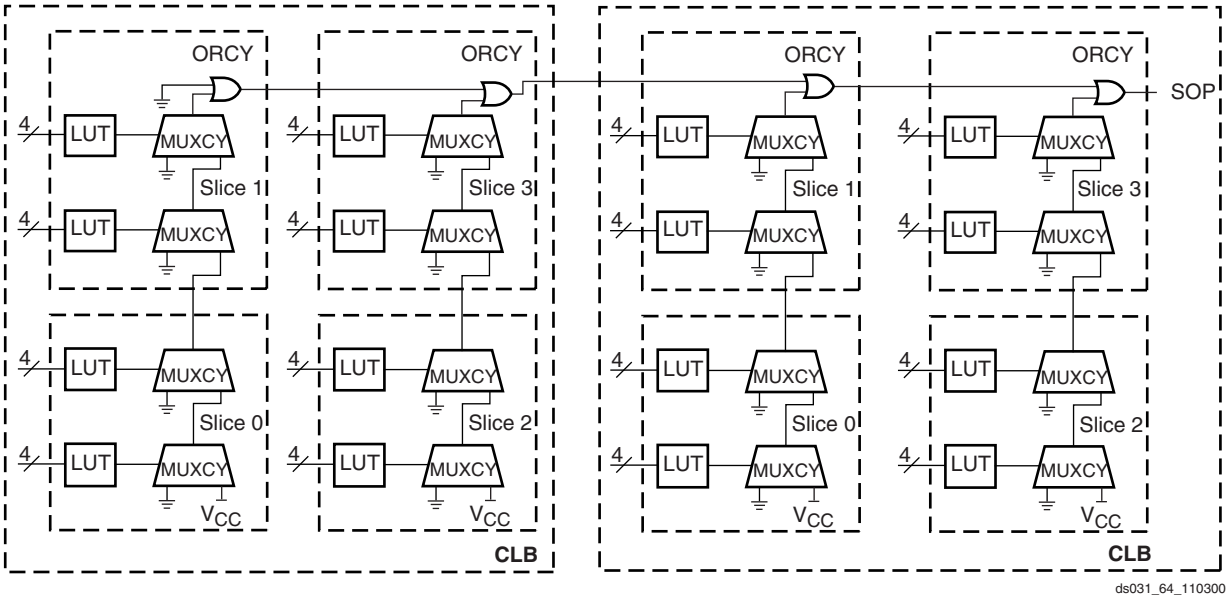

Figure 43: **Horizontal Cascade Chain**

LUTs and MUXCYs can implement large AND gates or other combinatorial logic functions. Figure 44 illustrates LUT and MUXCY resources configured as a 16-input AND gate.

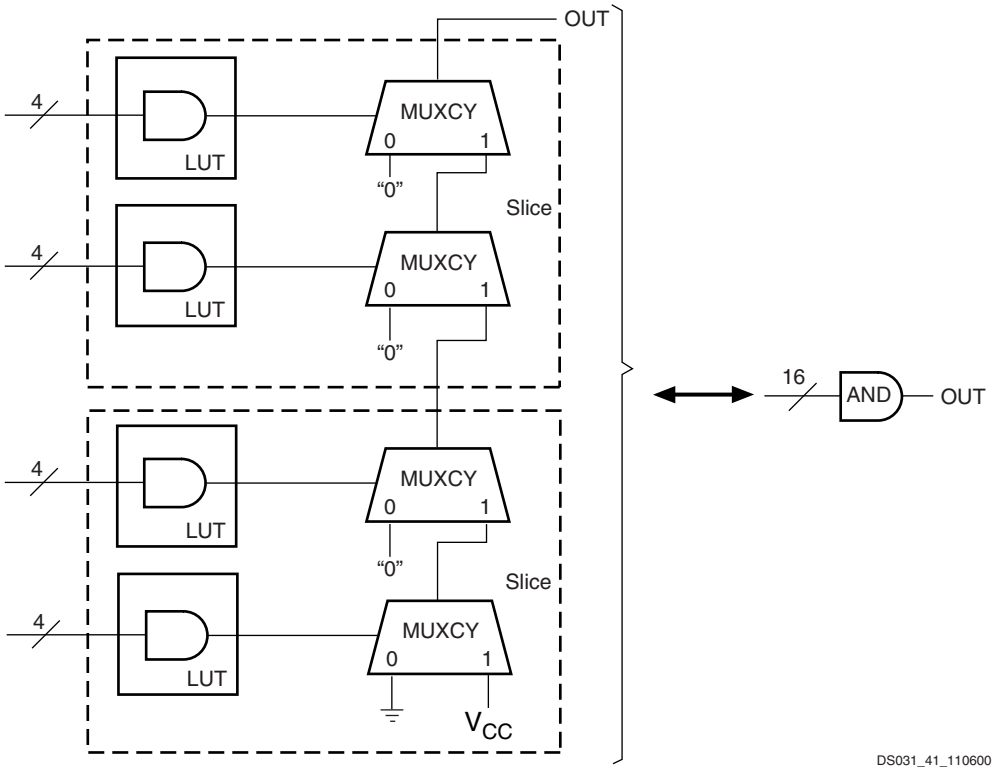

Figure 44: **Wide-Input AND Gate (16 Inputs)**

3-State Buffers

Introduction

Each Virtex-II Pro CLB contains two 3-state drivers (TBUFs) that can drive on-chip buses. Each 3-state buffer has its own 3-state control pin and its own input pin.

Each of the four slices have access to the two 3-state buffers through the switch matrix, as shown in Figure 45. TBUFs in neighboring CLBs can access slice outputs by direct connects. The outputs of the 3-state buffers drive horizontal routing resources used to implement 3-state buses.

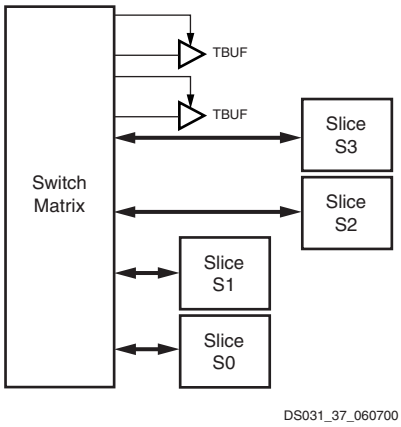

Figure 45: **Virtex-II Pro 3-State Buffers**

The 3-state buffer logic is implemented using AND-OR logic rather than 3-state drivers, so that timing is more predictable and less load dependant especially with larger devices.

Locations / Organization

Four horizontal routing resources per CLB are provided for on-chip 3-state buses. Each 3-state buffer has access alternately to two horizontal lines, which can be partitioned as shown in Figure 46. The switch matrices corresponding to SelectRAM+ memory and multiplier or I/O blocks are skipped.

Number of 3-State Buffers

Table 18 shows the number of 3-state buffers available in each Virtex-II Pro device. The number of 3-state buffers is twice the number of CLB elements.

Table 18: **Virtex-II Pro 3-State Buffers**

Device	3-State Buffers per Row	Total Number of 3-State Buffers
XC2VP2	44	704
XC2VP4	44	1,504
XC2VP7	68	2,464
XC2VP20	92	4,640
XC2VPX20	92	4,896
XC2VP30	92	6,848
XC2VP40	116	9,696
XC2VP50	140	11,808
XC2VP70	164	16,544
XC2VPX70	164	16,544
XC2VP100	188	22,048

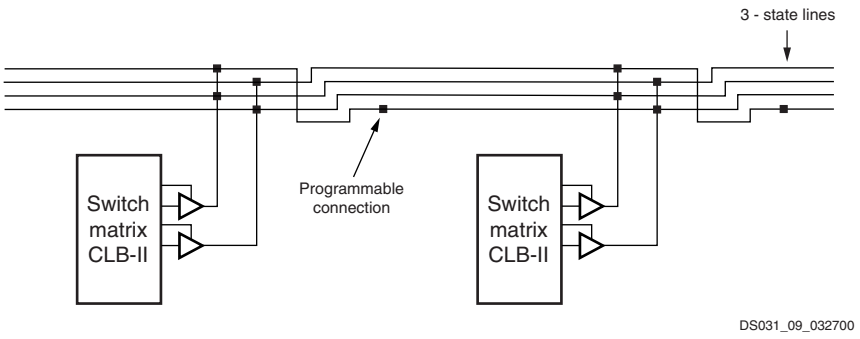

Figure 46: **3-State Buffer Connection to Horizontal Lines**

CLB/Slice Configurations

Table 19 summarizes the logic resources in one CLB. All of the CLBs are identical and each CLB or slice can be implemented in one of the configurations listed. Table 20 shows the available resources in all CLBs.

Table 19: **Logic Resources in One CLB**

Slices	LUTs	Flip-Flops	MULT_ANDs	Arithmetic & Carry-Chains	SOP Chains	Distributed SelectRAM+	Shift Registers	TBUF
4	8	8	8	2	2	128 bits	128 bits	2

Table 20: **Virtex-II Pro Logic Resources Available in All CLBs**

Device	CLB Array: Row x Column	Number of Slices	Number of LUTs	Max Distributed SelectRAM or Shift Register (bits)	Number of Flip-Flops	Number of Carry-Chains(1)	Number of SOP Chains(1)
XC2VP2	16 x 22	1,408	2,816	45,056	2,816	44	32
XC2VP4	40 x 22	3,008	6,016	96,256	6,016	44	80
XC2VP7	40 x 34	4,928	9,856	157,696	9,856	68	80
XC2VP20	56 x 46	9,280	18,560	296,960	18,560	92	112
XC2VPX20	56 x 46	9,792	19,584	313,334	18,560	92	112
XC2VP30	80 x 46	13,696	27,392	438,272	27,392	92	160
XC2VP40	88 x 58	19,392	38,784	620,544	38,784	116	176
XC2VP50	88 x 70	23,616	47,232	755,712	47,232	140	176
XC2VP70	104 x 82	33,088	66,176	1,058,816	66,176	164	208
XC2VPX70	104 x 82	33,088	66,176	1,058,816	66,176	164	208
XC2VP100	120 x 94	44,096	88,192	1,411,072	88,192	188	240

Notes:
1. The carry-chains and SOP chains can be split or cascaded.

18 Kb Block SelectRAM+ Resources

Introduction

Virtex-II Pro devices incorporate large amounts of 18 Kb block SelectRAM+ resources. These complement the distributed SelectRAM+ resources that provide shallow RAM structures implemented in CLBs. Each Virtex-II Pro block SelectRAM+ resource is an 18 Kb true dual-port RAM with two independently clocked and independently controlled synchronous ports that access a common storage area. Both ports are functionally identical. CLK, EN, WE, and SSR polarities are defined through configuration.

Each port has the following types of inputs: Clock and Clock Enable, Write Enable, Set/Reset, and Address, as well as separate Data/parity data inputs (for write) and Data/parity data outputs (for read).

Operation is synchronous; the block SelectRAM+ behaves like a register. Control, address and data inputs must (and need only) be valid during the set-up time window prior to a rising (or falling, a configuration option) clock edge. Data outputs change as a result of the same clock edge.

Configuration

Virtex-II Pro block SelectRAM+ supports various configurations, including single- and dual-port RAM and various data/address aspect ratios. Supported memory configurations for single- and dual-port modes are shown in Table 21.

Table 21: **Dual- and Single-Port Configurations**

16K x 1 bit	2K x 9 bits
8K x 2 bits	1K x 18 bits
4K x 4 bits	512 x 36 bits

Single-Port Configuration

As a single-port RAM, the block SelectRAM+ has access to the 18 Kb memory locations in any of the 2K x 9-bit, 1K x 18-bit, or 512 x 36-bit configurations and to 16 Kb memory locations in any of the 16K x 1-bit, 8K x 2-bit, or 4K x 4-bit configurations. The advantage of the 9-bit, 18-bit and 36-bit widths is the ability to store a parity bit for each eight bits. Parity bits must be generated or checked exter-

nally in user logic. In such cases, the width is viewed as 8 + 1, 16 + 2, or 32 + 4. These extra parity bits are stored and behave exactly as the other bits, including the timing parameters. Video applications can use the 9-bit ratio of Virtex-II Pro block SelectRAM+ memory to advantage.

Each block SelectRAM+ cell is a fully synchronous memory as illustrated in Figure 47. Input data bus and output data bus widths are identical.

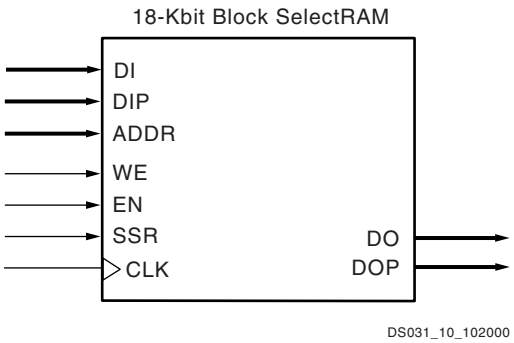

Figure 47: **18 Kb Block SelectRAM+ Memory in Single-Port Mode**

Dual-Port Configuration

As a dual-port RAM, each port of block SelectRAM+ has access to a common 18 Kb memory resource. These are fully synchronous ports with independent control signals for each port. The data widths of the two ports can be configured independently, providing built-in bus-width conversion.

Table 22 illustrates the different configurations available on ports A and B.

If both ports are configured in either 2K x 9-bit, 1K x 18-bit, or 512 x 36-bit configurations, the 18 Kb block is accessible from port A or B. If both ports are configured in either 16K x 1-bit, 8K x 2-bit. or 4K x 4-bit configurations, the 16 K-bit block is accessible from Port A or Port B. All other configurations result in one port having access to an 18 Kb memory block and the other port having access to a 16 K-bit subset of the memory block equal to 16 Kbs.

Table 22: **Dual-Port Mode Configurations**

Port A	16K x 1	16K x 1	16K x 1	16K x 1	16K x 1	16K x 1
Port B	16K x 1	8K x 2	4K x 4	2K x 9	1K x 18	512 x 36
Port A	8K x 2	8K x 2	8K x 2	8K x 2	8K x 2	
Port B	8K x 2	4K x 4	2K x 9	1K x 18	512 x 36	
Port A	4K x 4	4K x 4	4K x 4	4K x 4		
Port B	4K x 4	2K x 9	1K x 18	512 x 36		
Port A	2K x 9	2K x 9	2K x 9			
Port B	2K x 9	1K x 18	512 x 36			
Port A	1K x 18	1K x 18				
Port B	1K x 18	512 x 36				
Port A	512 x 36					
Port B	512 x 36					

Each block SelectRAM+ cell is a fully synchronous memory, as illustrated in Figure 48. The two ports have independent inputs and outputs and are independently clocked.

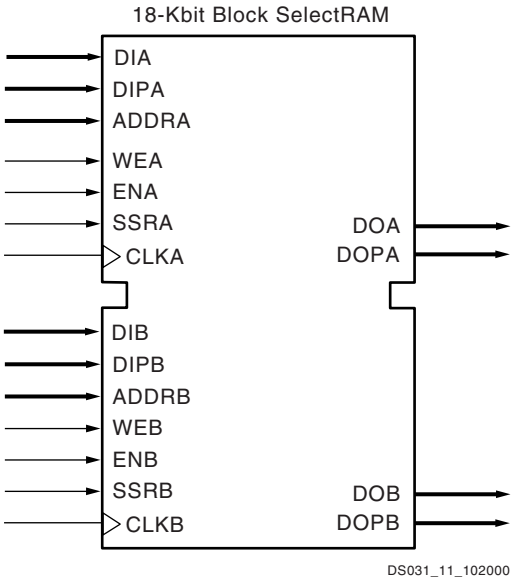

Figure 48: **18 Kb Block SelectRAM+ in Dual-Port Mode**

Port Aspect Ratios

Table 23 shows the depth and the width aspect ratios for the 18 Kb block SelectRAM+ resource. Virtex-II Pro block SelectRAM+ also includes dedicated routing resources to provide an efficient interface with CLBs, block SelectRAM+, and multipliers.

Table 23: **18 Kb Block SelectRAM+ Port Aspect Ratio**

Width	Depth	Address Bus	Data Bus	Parity Bus
1	16,384	ADDR[13:0]	DATA[0]	N/A
2	8,192	ADDR[12:0]	DATA[1:0]	N/A
4	4,096	ADDR[11:0]	DATA[3:0]	N/A
9	2,048	ADDR[10:0]	DATA[7:0]	Parity[0]
18	1,024	ADDR[9:0]	DATA[15:0]	Parity[1:0]
36	512	ADDR[8:0]	DATA[31:0]	Parity[3:0]

Read/Write Operations

The Virtex-II Pro block SelectRAM+ read operation is fully synchronous. An address is presented, and the read operation is enabled by control signal ENA or ENB. Then, depending on clock polarity, a rising or falling clock edge causes the stored data to be loaded into output registers.

The write operation is also fully synchronous. Data and address are presented, and the write operation is enabled by control signals WEA and WEB in addition to ENA or ENB. Then, again depending on the clock input mode, a rising or falling clock edge causes the data to be loaded into the memory cell addressed.

A write operation performs a simultaneous read operation. Three different options are available, selected by configuration:

1. **WRITE_FIRST**

   The WRITE_FIRST option is a transparent mode. The same clock edge that writes the data input (DI) into the memory also transfers DI into the output registers DO, as shown in Figure 49.

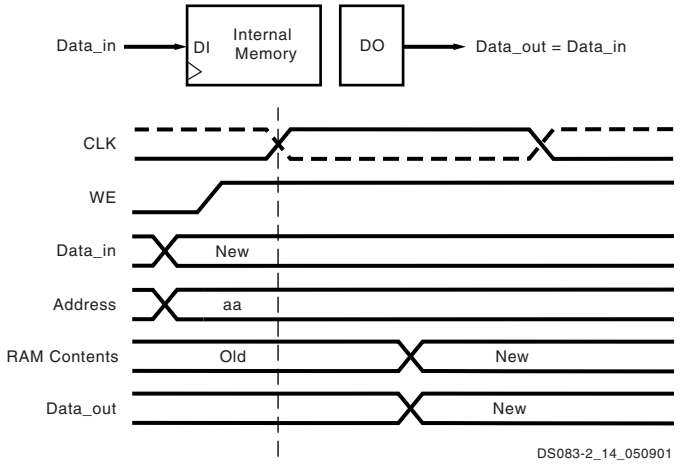

Figure 49: **WRITE_FIRST Mode**

2. **READ_FIRST**

The READ_FIRST option is a read-before-write mode.

The same clock edge that writes data input (DI) into the memory also transfers the prior content of the memory cell addressed into the data output registers DO, as shown in Figure 50.

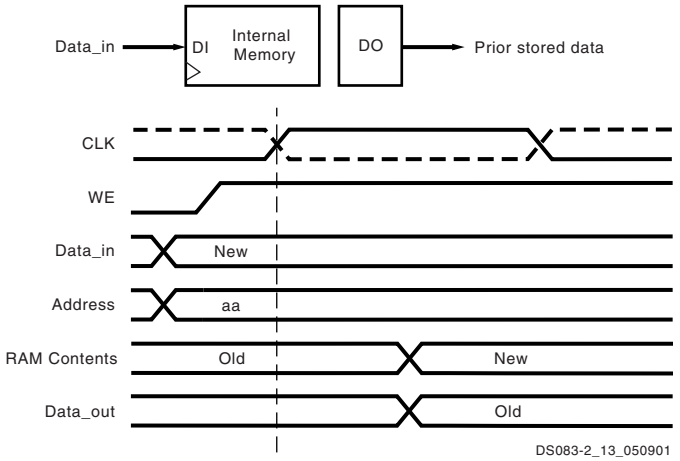

Figure 50: **READ_FIRST Mode**

3. NO_CHANGE

The NO_CHANGE option maintains the content of the output registers, regardless of the write operation. The clock edge during the write mode has no effect on the content of the data output register DO. When the port is configured as NO_CHANGE, only a read operation loads a new value in the output register DO, as shown in Figure 51.

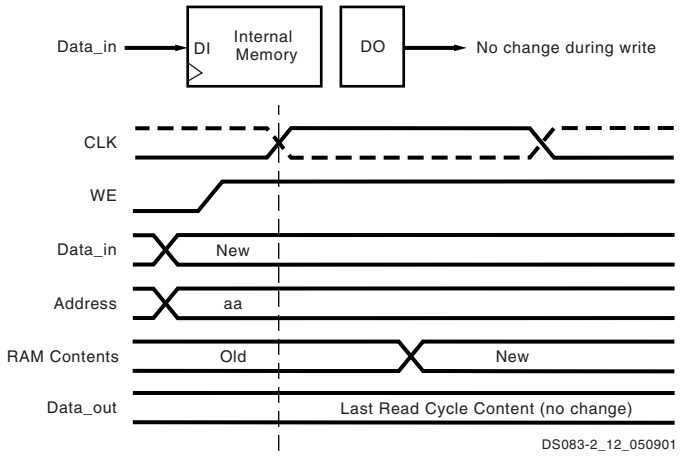

Figure 51: **NO_CHANGE Mode**

Control Pins and Attributes

Virtex-II Pro SelectRAM+ memory has two independent ports with the control signals described in Table 24. All control inputs including the clock have an optional inversion.

Table 24: **Control Functions**

Control Signal	Function
CLK	Read and Write Clock
EN	Enable affects Read, Write, Set, Reset
WE	Write Enable
SSR	Set DO register to SRVAL (attribute)

Initial memory content is determined by the INIT_xx attributes. Separate attributes determine the output register value after device configuration (INIT) and SSR is asserted (SRVAL). Both attributes (INIT_B and SRVAL) are available for each port when a block SelectRAM+ resource is configured as dual-port RAM.

Total Amount of SelectRAM+ Memory

Virtex-II Pro SelectRAM+ memory blocks are organized in multiple columns. The number of blocks per column depends on the row size, the number of Processor Blocks, and the number of RocketIO transceivers.

Table 25 shows the number of columns as well as the total amount of block SelectRAM+ memory available for each Virtex-II Pro device. The 18 Kb SelectRAM+ blocks are cascadable to implement deeper or wider single- or dual-port memory resources.

Table 25: **Virtex-II Pro SelectRAM+ Memory Available**

Device	Columns	Total SelectRAM+ Memory		
		Blocks	in Kb	in Bits
XC2VP2	4	12	216	221,184
XC2VP4	4	28	504	516,096
XC2VP7	6	44	792	811,008
XC2VP20	8	88	1,584	1,622,016
XC2VP30	8	136	2,448	2,506,752
XC2VPX20	8	88	1,584	1,622,016
XC2VP40	10	192	3,456	3,538,944
XC2VP50	12	232	4,176	4,276,224
XC2VP70	14	328	5,904	6,045,696
XC2VPX70	14	308	5,544	5,677,056
XC2VP100	16	444	7,992	8,183,808

Figure 52 shows the layout of the block RAM columns in the XC2VP4 device.

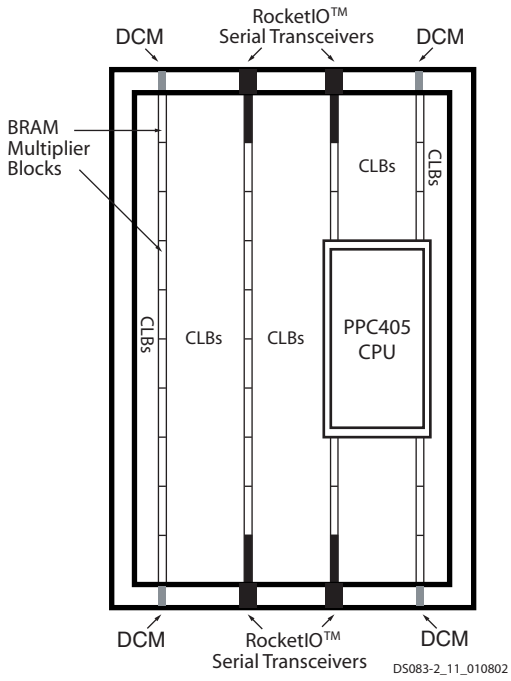

Figure 52: **XC2VP4 Block RAM Column Layout**

18-Bit x 18-Bit Multipliers

Introduction

A Virtex-II Pro multiplier block is an 18-bit by 18-bit 2's complement signed multiplier. Virtex-II Pro devices incorporate many embedded multiplier blocks. These multipliers can be associated with an 18 Kb block SelectRAM+ resource or can be used independently. They are optimized for high-speed operations and have a lower power consumption compared to an 18-bit x 18-bit multiplier in slices.

Each SelectRAM+ memory and multiplier block is tied to four switch matrices, as shown in Figure 53.

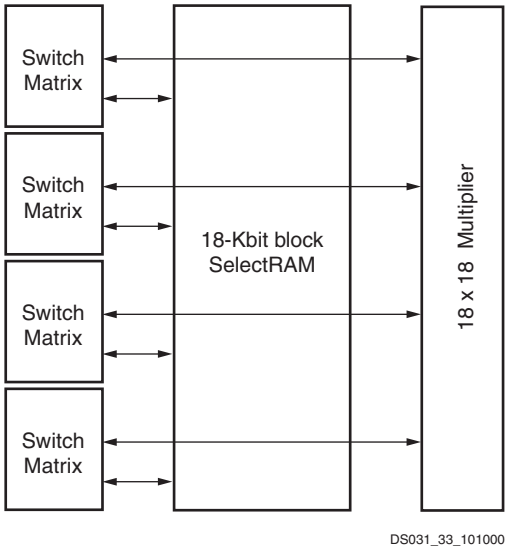

Figure 53: **SelectRAM+ and Multiplier Blocks**

Association With Block SelectRAM+ Memory

The interconnect is designed to allow SelectRAM+ memory and multiplier blocks to be used at the same time, but some interconnect is shared between the SelectRAM+ and the multiplier. Thus, SelectRAM+ memory can be used only up to 18 bits wide when the multiplier is used, because the multiplier shares inputs with the upper data bits of the SelectRAM+ memory.

This sharing of the interconnect is optimized for an 18-bit-wide block SelectRAM+ resource feeding the multiplier. The use of SelectRAM+ memory and the multiplier with an accumulator in LUTs allows for implementation of a digital signal processor (DSP) multiplier-accumulator (MAC) function, which is commonly used in finite and infinite impulse response (FIR and IIR) digital filters.

Configuration

The multiplier block is an 18-bit by 18-bit signed multiplier (2's complement). Both A and B are 18-bit-wide inputs, and the output is 36 bits. Figure 54 shows a multiplier block.

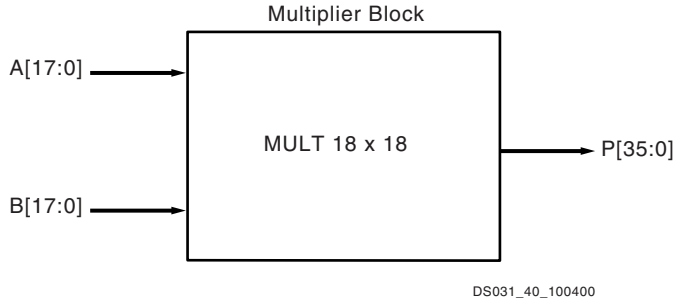

Figure 54: **Multiplier Block**

Locations / Organization

Multiplier organization is identical to the 18 Kb SelectRAM+ organization, because each multiplier is associated with an 18 Kb block SelectRAM+ resource.

Table 26: **Multiplier Resources**

Device	Columns	Total Multipliers
XC2VP2	4	12
XC2VP4	4	28
XC2VP7	6	44
XC2VP20	8	88
XC2VP30	8	136
XC2VPX20	8	88
XC2VP40	10	192
XC2VP50	12	232
XC2VP70	14	328
XC2VPX70	14	308
XC2VP100	16	444

In addition to the built-in multiplier blocks, the CLB elements have dedicated logic to implement efficient multipliers in logic. (Refer to Configurable Logic Blocks (CLBs), page 35).

Global Clock Multiplexer Buffers

Virtex-II Pro devices have 16 clock input pins that can also be used as regular user I/Os. Eight clock pads center on both the top edge and the bottom edge of the device, as illustrated in Figure 55.

The global clock multiplexer buffer represents the input to dedicated low-skew clock tree distribution in Virtex-II Pro devices. Like the clock pads, eight global clock multiplexer buffers are on the top edge of the device and eight are on the bottom edge.

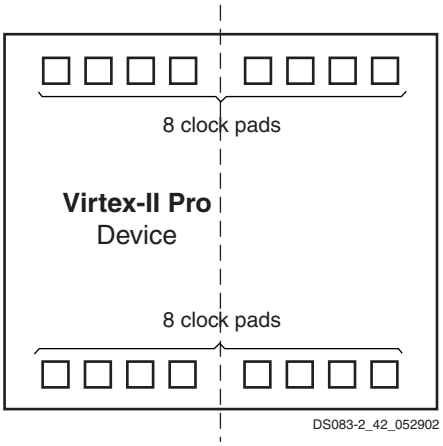

Figure 55: **Virtex-II Pro Clock Pads**

Each global clock multiplexer buffer can be driven either by the clock pad to distribute a clock directly to the device, or by the Digital Clock Manager (DCM), discussed in Digital Clock Manager (DCM), page 51. Each global clock multiplexer buffer can also be driven by local interconnects. The DCM has clock output(s) that can be connected to global clock multiplexer buffer inputs, as shown in Figure 56.

Global clock buffers are used to distribute the clock to some or all synchronous logic elements (such as registers in CLBs and IOBs, and SelectRAM+ blocks.

Eight global clocks can be used in each quadrant of the Virtex-II Pro device. Designers should consider the clock distribution detail of the device prior to pin-locking and floorplanning. (See the *Virtex-II Pro Platform FPGA User Guide*.)

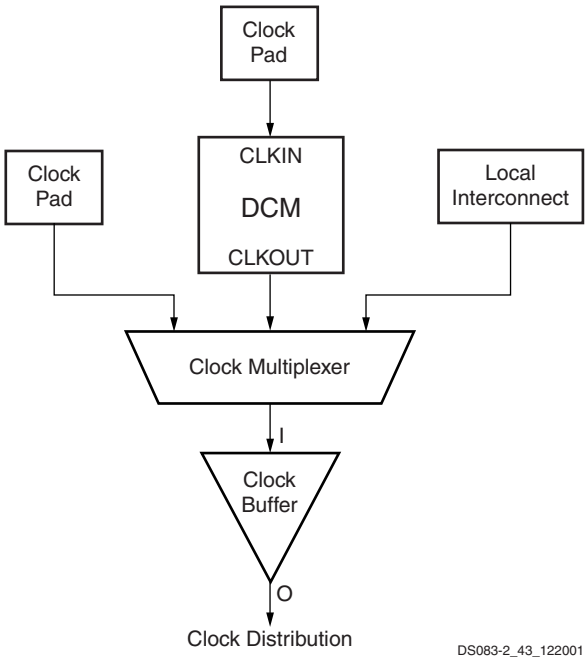

Figure 56: **Virtex-II Pro Clock Multiplexer Buffer Configuration**

Figure 57 shows clock distribution in Virtex-II Pro devices.

In each quadrant, up to eight clocks are organized in clock rows. A clock row supports up to 16 CLB rows (eight up and eight down). To reduce power consumption, any unused clock branches remain static.

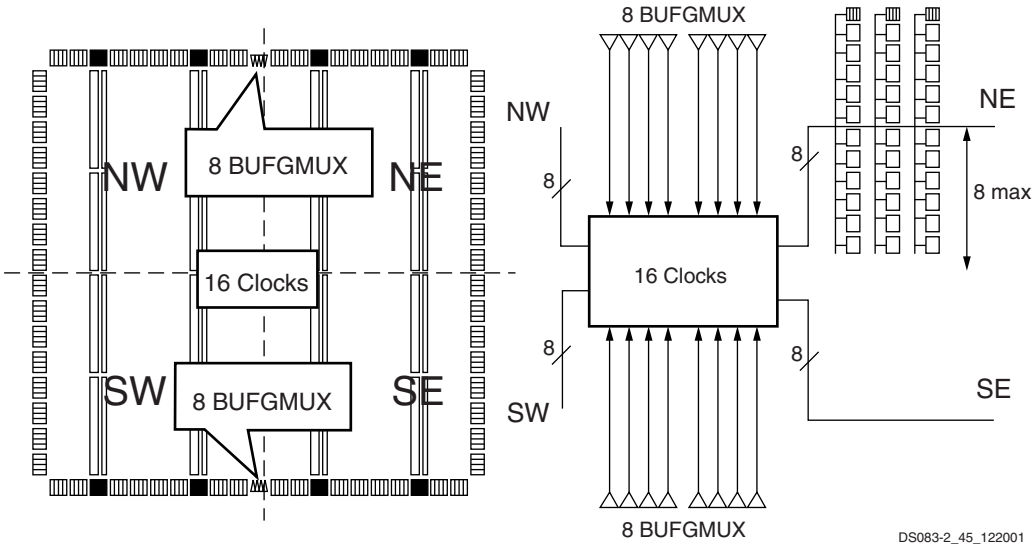

Figure 57: **Virtex-II Pro Clock Distribution**

Global clocks are driven by dedicated clock buffers (BUFG), which can also be used to gate the clock (BUFGCE) or to multiplex between two independent clock inputs (BUFGMUX).

The most common configuration option of this element is as a buffer. A BUFG function in this (global buffer) mode, is shown in Figure 58.

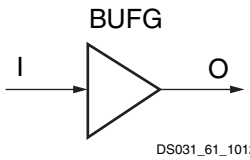

Figure 58: **Virtex-II Pro BUFG Function**

The Virtex-II Pro global clock buffer BUFG can also be configured as a clock enable/disable circuit (Figure 59), as well as a two-input clock multiplexer (Figure 60). A functional description of these two options is provided below. Each of them can be used in either of two modes, selected by configuration: rising clock edge or falling clock edge.

This section describes the rising clock edge option. For the opposite option, falling clock edge, just change all "rising" references to "falling" and all "High" references to "Low", except for the description of the CE and S levels. The rising clock edge option uses the BUFGCE and BUFGMUX primitives. The falling clock edge option uses the BUFGCE_1 and BUFGMUX_1 primitives.

BUFGCE

If the CE input is active (High) prior to the incoming rising clock edge, this Low-to-High-to-Low clock pulse passes through the clock buffer. Any level change of CE during the incoming clock High time has no effect.

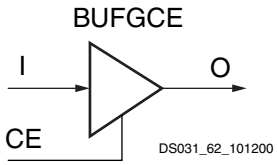

Figure 59: **Virtex-II Pro BUFGCE Function**

If the CE input is inactive (Low) prior to the incoming rising clock edge, the following clock pulse does not pass through the clock buffer, and the output stays Low. Any level change of CE during the incoming clock High time has no effect. CE must not change during a short setup window just prior to the rising clock edge on the BUFGCE input I. Violating this setup time requirement can result in an undefined runt pulse output.

BUFGMUX

BUFGMUX can switch between two unrelated, even asynchronous clocks. Basically, a Low on S selects the I_0 input, a High on S selects the I_1 input. Switching from one clock to the other is done in such a way that the output High and Low time is never shorter than the shortest High or Low time of either input clock. As long as the presently selected clock is High, any level change of S has no effect.

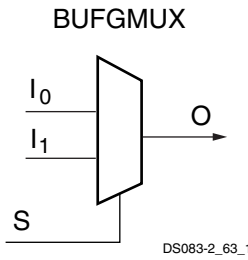

Figure 60: **Virtex-II Pro BUFGMUX Function**

If the presently selected clock is Low while S changes, or if it goes Low after S has changed, the output is kept Low until the other ("to-be-selected") clock has made a transition from High to Low. At that instant, the new clock starts driving the output.

The two clock inputs can be asynchronous with regard to each other, and the S input can change at any time, except for a short setup time prior to the rising edge of the presently selected clock (I0 or I1). Violating this setup time requirement can result in an undefined runt pulse output.

All Virtex-II Pro devices have 16 global clock multiplexer buffers.

Figure 61 shows a switchover from I0 to I1.

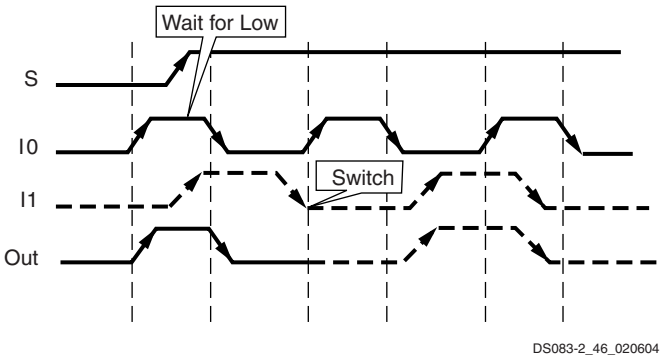

Figure 61: **Clock Multiplexer Waveform Diagram**

- The current clock is CLK0.
- S is activated High.
- If CLK0 is currently High, the multiplexer waits for CLK0 to go Low.
- Once CLK0 is Low, the multiplexer output stays Low until CLK1 transitions High to Low.
- When CLK1 transitions from High to Low, the output switches to CLK1.
- No glitches or short pulses can appear on the output.

Local Clocking

In addition to global clocks, there are local clock resources in the Virtex-II Pro devices. There are more than 72 local clocks in the Virtex-II Pro family. These resources can be used for many different applications, including but not limited to memory interfaces. For example, even using only the left and right I/O banks, Virtex-II Pro FPGAs can support up to 50 local clocks for DDR SDRAM. These interfaces can operate beyond 200 MHz on Virtex-II Pro devices.

Digital Clock Manager (DCM)

The Virtex-II Pro DCM offers a wide range of powerful clock management features.

- **Clock De-skew**: The DCM generates new system clocks (either internally or externally to the FPGA), which are phase-aligned to the input clock, thus eliminating clock distribution delays.
- **Frequency Synthesis**: The DCM generates a wide range of output clock frequencies, performing very flexible clock multiplication and division.
- **Phase Shifting**: The DCM provides both coarse phase shifting and fine-grained phase shifting with dynamic phase shift control.

The DCM utilizes fully digital delay lines allowing robust high-precision control of clock phase and frequency. It also utilizes fully digital feedback systems, operating dynamically to compensate for temperature and voltage variations during operation.

Up to four of the nine DCM clock outputs can drive inputs to global clock buffers or global clock multiplexer buffers simultaneously (see Figure 62). All DCM clock outputs can simultaneously drive general routing resources, including routes to output buffers.

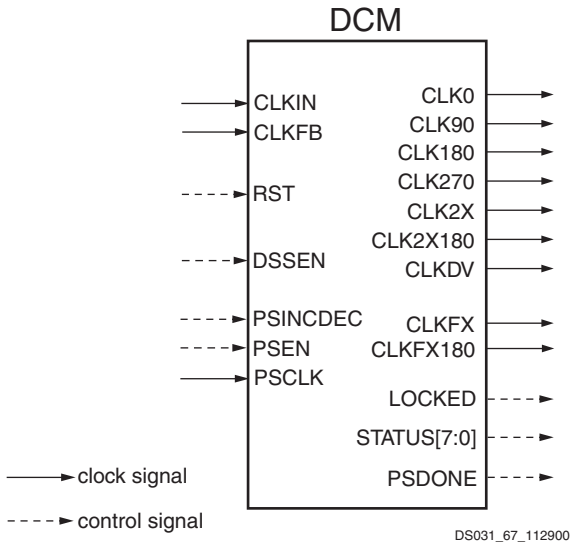

Figure 62: **Digital Clock Manager**

The DCM can be configured to delay the completion of the Virtex-II Pro configuration process until after the DCM has achieved lock. This guarantees that the chip does not begin operating until after the system clocks generated by the DCM have stabilized.

The DCM has the following general control signals:

- RST input pin: resets the entire DCM
- LOCKED output pin: asserted High when all enabled DCM circuits have locked.
- STATUS output pins (active High): shown in Table 27.

Table 27: **DCM Status Pins**

Status Pin	Function
0	Phase Shift Overflow
1	CLKIN Stopped
2	CLKFX Stopped
3	N/A
4	N/A
5	N/A
6	N/A
7	N/A

Clock De-skew

The DCM de-skews the output clocks relative to the input clock by automatically adjusting a digital delay line. Additional delay is introduced so that clock edges arrive at internal registers and block RAMs simultaneously with the clock edges arriving at the input clock pad. Alternatively, external clocks, which are also de-skewed relative to the input clock, can be generated for board-level routing. All DCM output clocks are phase-aligned to CLK0 and, therefore, are also phase-aligned to the input clock.

To achieve clock de-skew, connect the CLKFB input to CLK0. Note that CLKFB must always be connected, unless only the CLKFX or CLKFX180 outputs are used and de-skew is not required.

Frequency Synthesis

The DCM provides flexible methods for generating new clock frequencies. Each method has a different operating frequency range and different AC characteristics. The CLK2X and CLK2X180 outputs double the clock frequency. The CLKDV output creates divided output clocks with division options of 1.5, 2, 2.5, 3, 3.5, 4, 4.5, 5, 5.5, 6, 6.5, 7, 7.5, 8, 9, 10, 11, 12, 13, 14, 15, and 16.

The CLKFX and CLKFX180 outputs can be used to produce clocks at the following frequency:

$$\mathrm{FREQ}_{\mathrm{CLKFX}} = (M/D) \bullet \mathrm{FREQ}_{\mathrm{CLKIN}}$$

where M and D are two integers. Specifications for M and D are provided under **DCM Timing Parameters** in Virtex-II Pro and Virtex-II Pro X Platform FPGAs: DC and Switching Characteristics. By default, $M = 4$ and $D = 1$, which results in a clock output frequency four times faster than the clock input frequency (CLKIN).

CLK2X180 is phase shifted 180 degrees relative to CLK2X. CLKFX180 is phase shifted 180 degrees relative to CLKFX. All frequency synthesis outputs automatically have 50/50 duty cycles, with the exception of the CLKDV output when performing a non-integer divide in high-frequency mode. See Table 28 for more details.

Note that CLK2X and CLK2X180 are not available in high-frequency mode.

Table 28: **CLKDV Duty Cycle for Non-integer Divides**

CLKDV_DIVIDE	Duty Cycle
1.5	1/3
2.5	2/5
3.5	3/7
4.5	4/9
5.5	5/11
6.5	6/13
7.5	7/15

Phase Shifting

The DCM provides additional control over clock skew through either coarse or fine-grained phase shifting. The CLK0, CLK90, CLK180, and CLK270 outputs are each phase shifted by ¼ of the input clock period relative to each other, providing coarse phase control. Note that CLK90 and CLK270 are not available in high-frequency mode.

Fine-phase adjustment affects all nine DCM output clocks. When activated, the phase shift between the rising edges of CLKIN and CLKFB is a specified fraction of the input clock period.

In variable mode, the PHASE_SHIFT value can also be dynamically incremented or decremented as determined by PSINCDEC synchronously to PSCLK, when the PSEN input is active. Figure 63 illustrates the effects of fine-phase shifting. For more information on DCM features, see the *Virtex-II Pro Platform FPGA User Guide*.

Table 29 lists fine-phase shifting control pins, when used in variable mode.

Table 29: **Fine Phase Shifting Control Pins**

Control Pin	Direction	Function
PSINCDEC	In	Increment or decrement
PSEN	In	Enable ± phase shift
PSCLK	In	Clock for phase shift
PSDONE	Out	Active when completed

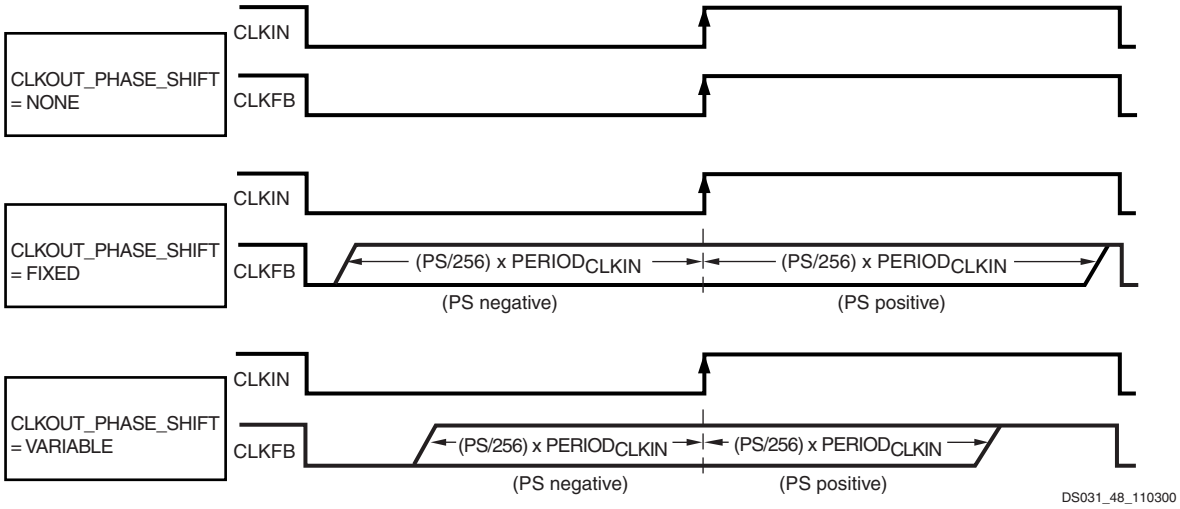

Figure 63: **Fine-Phase Shifting Effects**

Two separate components of the phase shift range must be understood:

- PHASE_SHIFT attribute range
- FINE_SHIFT_RANGE DCM timing parameter range

The PHASE_SHIFT attribute is the numerator in the following equation:

Phase Shift (ns) = (PHASE_SHIFT/256) * $PERIOD_{CLKIN}$

The full range of this attribute is always -255 to +255, but its practical range varies with CLKIN frequency, as constrained by the FINE_SHIFT_RANGE component, which represents the total delay achievable by the phase shift delay line. Total delay is a function of the number of delay taps used in the circuit. Across process, voltage, and temperature, this absolute range is guaranteed to be as specified under **DCM Timing Parameters** in Virtex-II Pro and Virtex-II Pro X Platform FPGAs: DC and Switching Characteristics.

Absolute range (fixed mode) = ± FINE_SHIFT_RANGE

Absolute range (variable mode) = ± FINE_SHIFT_RANGE/2

The reason for the difference between fixed and variable modes is as follows. For variable mode to allow symmetric, dynamic sweeps from -255/256 to +255/256, the DCM sets the "zero phase skew" point as the middle of the delay line, thus dividing the total delay line range in half. In fixed mode, since the PHASE_SHIFT value never changes after configuration, the entire delay line is available for insertion into either the CLKIN or CLKFB path (to create either positive or negative skew).

Taking both of these components into consideration, the following are some usage examples:

- If $PERIOD_{CLKIN}$ = 2 * FINE_SHIFT_RANGE, then PHASE_SHIFT in fixed mode is limited to ± 128, and in variable mode it is limited to ± 64.
- If $PERIOD_{CLKIN}$ = FINE_SHIFT_RANGE, then PHASE_SHIFT in fixed mode is limited to ± 255, and in variable mode it is limited to ± 128.
- If $PERIOD_{CLKIN} \leq 0.5$ * FINE_SHIFT_RANGE, then PHASE_SHIFT is limited to ± 255 in either mode.

Operating Modes

The frequency ranges of DCM input and output clocks depend on the operating mode specified, either low-frequency mode or high-frequency mode, according to Table 30. For actual values, see Virtex-II Pro and Virtex-II Pro X Platform FPGAs: DC and Switching Characteristics. The CLK2X, CLK2X180, CLK90, and CLK270 outputs are not available in high-frequency mode.

High or low-frequency mode is selected by an attribute.

Table 30: **DCM Frequency Ranges**

Output Clock	Low-Frequency Mode		High-Frequency Mode	
	CLKIN Input	CLK Output	CLKIN Input	CLK Output
CLK0, CLK180	CLKIN_FREQ_DLL_LF	CLKOUT_FREQ_1X_LF	CLKIN_FREQ_DLL_HF	CLKOUT_FREQ_1X_HF
CLK90, CLK270	CLKIN_FREQ_DLL_LF	CLKOUT_FREQ_1X_LF	NA	NA
CLK2X, CLK2X180	CLKIN_FREQ_DLL_LF	CLKOUT_FREQ_2X_LF	NA	NA
CLKDV	CLKIN_FREQ_DLL_LF	CLKOUT_FREQ_DV_LF	CLKIN_FREQ_DLL_HF	CLKOUT_FREQ_DV_HF
CLKFX, CLKFX180	CLKIN_FREQ_FX_LF	CLKOUT_FREQ_FX_LF	CLKIN_FREQ_FX_HF	CLKOUT_FREQ_FX_HF

Routing

DCM and MGT Locations/Organization

Virtex-II Pro DCMs and serial transceivers (MGTs) are placed on the top and bottom of each block RAM and multiplier column in some combination, as shown in Table 31. The number of DCMs and RocketIO transceivers total twice the number of block RAM columns in the device. Refer to Figure 52, page 47 for an illustration of this in the XC2VP4 device.

Table 31: **DCM and MGT Organization**

Device	Block RAM Columns	DCMs	MGTs
XC2VP2	4	4	4
XC2VP4	4	4	4
XC2VP7	6	4	8
XC2VP20	8	8	8
XC2VPX20	8	8	8
XC2VP30	8	8	8
XC2VP40	10	8	12
XC2VP50	12	8	16
XC2VP70	14	8	20
XC2VPX70	14	8	20
XC2VP100	16	12	20

Place-and-route software takes advantage of this regular array to deliver optimum system performance and fast compile times. The segmented routing resources are essential to guarantee IP cores portability and to efficiently handle an incremental design flow that is based on modular implementations. Total design time is reduced due to fewer and shorter design iterations.

Hierarchical Routing Resources

Most Virtex-II Pro signals are routed using the global routing resources, which are located in horizontal and vertical routing channels between each switch matrix.

As shown in Figure 64, page 54, Virtex-II Pro has fully buffered programmable interconnections, with a number of resources counted between any two adjacent switch matrix rows or columns. Fanout has minimal impact on the performance of each net.

- The long lines are bidirectional wires that distribute signals across the device. Vertical and horizontal long lines span the full height and width of the device.
- The hex lines route signals to every third or sixth block away in all four directions. Organized in a staggered pattern, hex lines can only be driven from one end. Hex-line signals can be accessed either at the endpoints or at the midpoint (three blocks from the source).

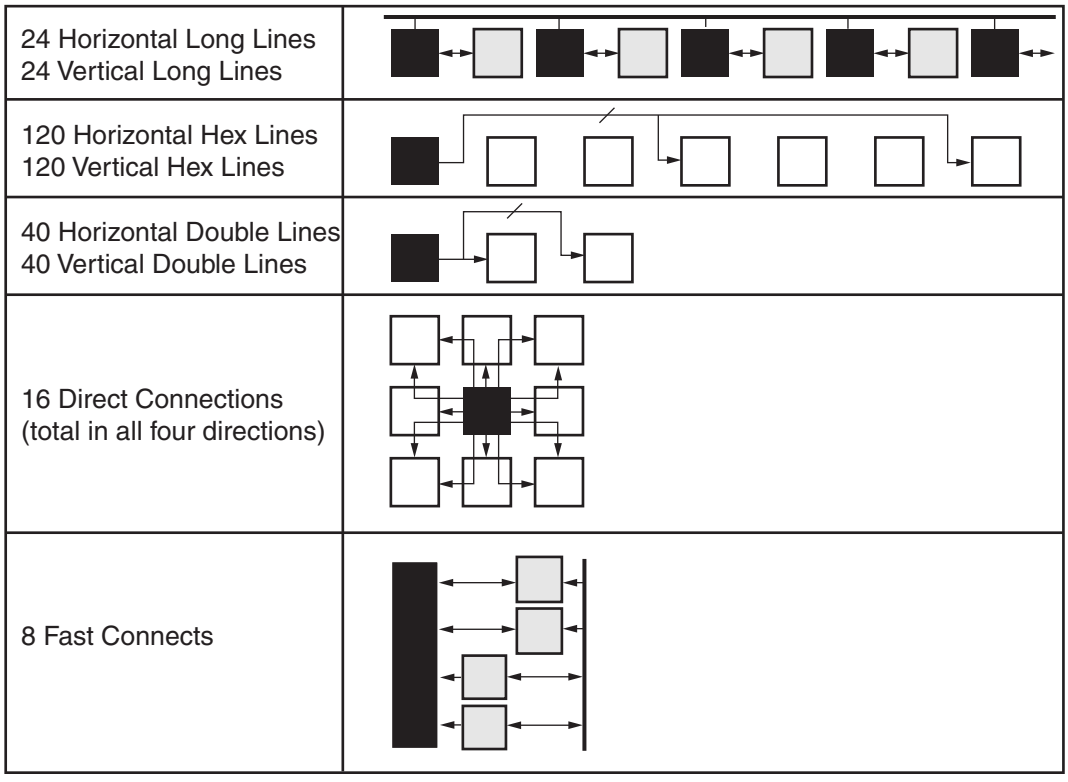

Figure 64: **Hierarchical Routing Resources**

- The double lines route signals to every first or second block away in all four directions. Organized in a staggered pattern, double lines can be driven only at their endpoints. Double-line signals can be accessed either at the endpoints or at the midpoint (one block from the source).
- The direct connect lines route signals to neighboring blocks: vertically, horizontally, and diagonally.
- The fast connect lines are the internal CLB local interconnections from LUT outputs to LUT inputs.

Dedicated Routing

In addition to the global and local routing resources, dedicated signals are available.

- There are eight global clock nets per quadrant. (See Global Clock Multiplexer Buffers, page 48.)
- Horizontal routing resources are provided for on-chip 3-state buses. Four partitionable bus lines are provided per CLB row, permitting multiple buses within a row. (See 3-State Buffers, page 43.)
- Two dedicated carry-chain resources per slice column (two per CLB column) propagate carry-chain MUXCY output signals vertically to the adjacent slice. (See CLB/Slice Configurations, page 44.)
- One dedicated SOP chain per slice row (two per CLB row) propagate ORCY output logic signals horizontally to the adjacent slice. (See Sum of Products, page 42.)
- One dedicated shift-chain per CLB connects the output of LUTs in shift-register mode to the input of the next LUT in shift-register mode (vertically) inside the CLB. (See Shift Registers, page 39.)

XC2VP2-6FF672C Xilinx Inc. IC FPGA 204 I/O 672FCBGA

Configuration

Virtex-II Pro devices are configured by loading application specific configuration data into the internal configuration memory. Configuration is carried out using a subset of the device pins, some of which are dedicated, while others can be re-used as general purpose inputs and outputs once configuration is complete.

Depending on the system design, several configuration modes are supported, selectable via mode pins. The mode pins M2, M1, and M0 are dedicated pins. The M2, M1, and M0 mode pins should be set at a constant DC voltage level, either through pull-up or pull-down resistors, or tied directly to ground or V_{CCAUX}. The mode pins should not be toggled during and after configuration.

An additional pin, HSWAP_EN is used in conjunction with the mode pins to select whether user I/O pins have pull-ups during configuration. By default, HSWAP_EN is tied High (internal pull-up) which shuts off the pull-ups on the user I/O pins during configuration. When HSWAP_EN is tied Low, user I/Os have pull-ups during configuration. Other dedicated pins are CCLK (the configuration clock pin), DONE, PROG_B, and the Boundary-Scan pins: TDI, TDO, TMS, and TCK. (The TDO pin is open-drain and does not have an internal pull-up resistor.) Depending on the configuration mode chosen, CCLK can be an output generated by the FPGA, or an input accepting an externally generated clock. The configuration pins and Boundary-Scan pins are independent of the V_{CCO}. The auxiliary power supply (V_{CCAUX}) of 2.5V is used for these pins. All configuration pins are LVCMOS25 12mA. See Virtex-II Pro and Virtex-II Pro X Platform FPGAs: DC and Switching Characteristics.

A "persist" option is available which can be used to force the configuration pins to retain their configuration function even after device configuration is complete. If the persist option is not selected then the configuration pins with the exception of CCLK, PROG_B, and DONE can be used as user I/O in normal operation. The persist option does not apply to the Boundary-Scan related pins. The persist feature is valuable in applications which employ partial reconfiguration or reconfiguration on the fly.

Configuration Modes

Virtex-II Pro supports the following five configuration modes:

- Slave-Serial Mode
- Master-Serial Mode
- Slave SelectMAP Mode
- Master SelectMAP Mode
- Boundary-Scan (JTAG, IEEE 1532) Mode

Refer to Table 32, page 57.

A detailed description of configuration modes is provided in the *Virtex-II Pro Platform FPGA User Guide.*

Slave-Serial Mode

In slave-serial mode, the FPGA receives configuration data in bit-serial form from a serial PROM or other serial source of configuration data. The CCLK pin on the FPGA is an input in this mode. The serial bitstream must be setup at the DIN input pin a short time before each rising edge of the externally generated CCLK.

Multiple FPGAs can be daisy-chained for configuration from a single source. After a particular FPGA has been configured, the data for the next device is routed internally to the DOUT pin. The data on the DOUT pin changes on the falling edge of CCLK.

Slave-serial mode is selected by applying [111] to the mode pins (M2, M1, M0). A weak pull-up on the mode pins makes slave serial the default mode if the pins are left unconnected.

Master-Serial Mode

In master-serial mode, the CCLK pin is an output pin. It is the Virtex-II Pro FPGA device that drives the configuration clock on the CCLK pin to a Xilinx Serial PROM which in turn feeds bit-serial data to the DIN input. The FPGA accepts this data on each rising CCLK edge. After the FPGA has been loaded, the data for the next device in a daisy-chain is presented on the DOUT pin after the falling CCLK edge.

The interface is identical to slave serial except that an internal oscillator is used to generate the configuration clock (CCLK). A wide range of frequencies can be selected for CCLK which always starts at a slow default frequency. Configuration bits then switch CCLK to a higher frequency for the remainder of the configuration.

Slave SelectMAP Mode

The SelectMAP mode is the fastest configuration option. Byte-wide data is written into the Virtex-II Pro FPGA device with a BUSY flag controlling the flow of data. An external data source provides a byte stream, CCLK, an active Low Chip Select (CS_B) signal and a Write signal (RDWR_B). If BUSY is asserted (High) by the FPGA, the data must be held until BUSY goes Low. Data can also be read using the SelectMAP mode. If RDWR_B is asserted, configuration data is read out of the FPGA as part of a readback operation.

After configuration, the pins of the SelectMAP port can be used as additional user I/O. Alternatively, the port can be retained to permit high-speed 8-bit readback using the persist option.

Multiple Virtex-II Pro FPGAs can be configured using the SelectMAP mode, and be made to start-up simultaneously. To configure multiple devices in this way, wire the individual CCLK, Data, RDWR_B, and BUSY pins of all the devices in parallel. The individual devices are loaded separately by deasserting the CS_B pin of each device in turn and writing the appropriate data.

Master SelectMAP Mode

This mode is a master version of the SelectMAP mode. The device is configured byte-wide on a CCLK supplied by the Virtex-II Pro FPGA device. Timing is similar to the Slave SerialMAP mode except that CCLK is supplied by the Virtex-II Pro FPGA.

Boundary-Scan (JTAG, IEEE 1532) Mode

In Boundary-Scan mode, dedicated pins are used for configuring the Virtex-II Pro device. The configuration is done entirely through the IEEE 1149.1 Test Access Port (TAP). Virtex-II Pro device configuration using Boundary-Scan is compatible with with IEEE 1149.1-1993 standard and the new IEEE 1532 standard for In-System Configurable (ISC) devices. The IEEE 1532 standard is backward compliant with the IEEE 1149.1-1993 TAP and state machine. The IEEE Standard 1532 for In-System Configurable (ISC) devices is intended to be programmed, reprogrammed, or tested on the board via a physical and logical protocol. Configuration through the Boundary-Scan port is always available, independent of the mode selection. Selecting the Boundary-Scan mode simply turns off the other modes.

Table 32: **Virtex-II Pro Configuration Mode Pin Settings**

Configuration Mode(1)	M2	M1	M0	CCLK Direction	Data Width	Serial D_{OUT}(2)
Master Serial	0	0	0	Out	1	Yes
Slave Serial	1	1	1	In	1	Yes
Master SelectMAP	0	1	1	Out	8	No
Slave SelectMAP	1	1	0	In	8	No
Boundary-Scan	1	0	1	N/A	1	No

Notes:
1. The HSWAP_EN pin controls the pull-ups. Setting M2, M1, and M0 selects the configuration mode, while the HSWAP_EN pin controls whether or not the pull-ups are used.
2. Daisy chaining is possible only in modes where Serial D_{OUT} is used. For example, in SelectMAP modes, the first device does NOT support daisy chaining of downstream devices.

Table 33 lists the default total number of bits required to configure each device.

Table 33: **Virtex-II Pro Default Bitstream Lengths**

Device	Number of Configuration Bits
XC2VP2	1,305,376
XC2VP4	3,006,496
XC2VP7	4,485,408
XC2VP20	8,214,560
XC2VPX20	8,214,560
XC2VP30	11,589,920
XC2VP40	15,868,192
XC2VP50	19,021,344
XC2VP70	26,098,976
XC2VPX70	26,098,976
XC2VP100	34,292,768

Configuration Sequence

The configuration of Virtex-II Pro devices is a three-phase process. First, the configuration memory is cleared. Next, configuration data is loaded into the memory, and finally, the logic is activated by a start-up process.

Configuration is automatically initiated on power-up unless it is delayed by the user. The INIT_B pin can be held Low using an open-drain driver. An open-drain is required since INIT_B is a bidirectional open-drain pin that is held Low by a Virtex-II Pro FPGA device while the configuration memory is being cleared. Extending the time that the pin is Low causes the configuration sequencer to wait. Thus, configuration is delayed by preventing entry into the phase where data is loaded.

The configuration process can also be initiated by asserting the PROG_B pin. The end of the memory-clearing phase is signaled by the INIT_B pin going High, and the completion of the entire process is signaled by the DONE pin going High. The Global Set/Reset (GSR) signal is pulsed after the last frame of configuration data is written but before the start-up sequence. The GSR signal resets all flip-flops on the device.

The default start-up sequence is that one CCLK cycle after DONE goes High, the global 3-state signal (GTS) is released. This permits device outputs to turn on as necessary. One CCLK cycle later, the Global Write Enable (GWE) signal is released. This permits the internal storage elements to begin changing state in response to the logic and the user clock.

The relative timing of these events can be changed via configuration options in software. In addition, the GTS and GWE events can be made dependent on the DONE pins of multiple devices all going High, forcing the devices to start

synchronously. The sequence can also be paused at any stage, until lock has been achieved on any or all DCMs, as well as DCI.

Readback

In this mode, configuration data from the Virtex-II Pro FPGA device can be read back. Readback is supported only in the SelectMAP (master and slave) and Boundary-Scan mode.

Along with the configuration data, it is possible to read back the contents of all registers, distributed SelectRAM+, and block RAM resources. This capability is used for real-time debugging. For more detailed configuration information, see the *Virtex-II Pro Platform FPGA User Guide.*

Bitstream Encryption

Virtex-II Pro devices have an on-chip decryptor using one or two sets of three keys for triple-key Data Encryption Standard (DES) operation. Xilinx software tools offer an optional encryption of the configuration data (bitstream) with a triple-key DES determined by the designer.

The keys are stored in the FPGA by JTAG instruction and retained by a battery connected to the V_{BATT} pin, when the device is not powered. Virtex-II Pro devices can be configured with the corresponding encrypted bitstream, using any of the configuration modes described previously.

A detailed description of how to use bitstream encryption is provided in the ***Virtex-II Pro Platform FPGA User Guide***. Your local FAE can also provide specific information on this feature.

Partial Reconfiguration

Partial reconfiguration of Virtex-II Pro devices can be accomplished in either Slave SelectMAP mode or Boundary-Scan mode. Instead of resetting the chip and doing a full configuration, new data is loaded into a specified area of the chip, while the rest of the chip remains in operation. Data is loaded on a column basis, with the smallest load unit being a configuration “frame” of the bitstream (device size dependent).

Partial reconfiguration is useful for applications that require different designs to be loaded into the same area of a chip, or that require the ability to change portions of a design without having to reset or reconfigure the entire chip.

For more information on Partial Reconfiguration in Virtex-II Pro devices, please refer to Xilinx Application Note **XAPP290**, *Two Flows for Partial Reconfiguration*.

Revision History

This section records the change history for this module of the data sheet.

Date	Version	Revision
01/31/02	1.0	Initial Xilinx release.
06/13/02	2.0	New Virtex-II Pro family members. New timing parameters per speedsfile **v1.62**.
09/03/02	2.1	• Revised Reset and Power sections. • Updated Table 8, which lists compatible input standards. [Table deleted in v2.6.] • Added Figure 28, Figure 29, and Figure 30, which provide examples illustrating the use of I/O standards.
09/27/02	2.2	• In section RocketIO Overview, corrected max number of MGTs from 16 to 24. • In section Input/Output Blocks (IOBs), added references to XAPP653 regarding implementation of 3.3V I/O standards.
11/20/02	2.3	• Table 8: Added rows for LVTTL, LVCMOS33, and PCI-X. • Table 8: Added LVTTL and LVCMOS33 to compatible 3.3V cells. [Table deleted in v2.6.] • Table 33: Correct bitstream lengths.
12/03/02	2.4	• Added mention of LVTTL and PCI with respect to SelectIO-Ultra configurations. See section Input/Output Individual Options and Figure 22.
01/20/03	2.5	• Added qualification to features vs. Virtex-II (open-drain output pin TDO does not have internal pull-up resistor) • Table 7: Added HSTL18 (I, II, III, & IV) and HSTL18_DCI (I,II, III & IV) to 1.8V VCCO row. [Table deleted in v2.6.] • Table 8: Numerous revisions. [Table deleted in v2.6.]

Date	Version	Revision
03/24/03	2.5.1	• Table 10: Corrected I/O standard names SSTL18_I and SSTL18_II to SSTL18_I_DCI and SSTL18_II_DCI respectively. • Figure 61, text below: Corrected wording of criteria for clock switching.
05/27/03	2.6	• Removed Compatible Output Standards and Compatible Input Standards tables. • Added new Table 12, Summary of Voltage Supply Requirements for All Input and Output Standards. This table replaces deleted I/O standards tables. • Corrected sentence in section Input/Output Individual Options, page 27, to read “The optional weak-keeper circuit is connected to each *user I/O pad*.” • Added section Rules for Combining I/O Standards in the Same Bank, page 29.
06/02/03	2.7	• Added four Differential Termination I/O standards to Table 9 and Table 12. • Added section On-Chip Differential Termination and Figure 31, page 34.
08/25/03	2.7.1	• Added footnote referring to XAPP659 to 3.3V I/O callouts in Table 8 and Table 12.
09/10/03	2.8	• Section Configuration, page 56: Added text indicating that the mode pins M0-M2 must be held to a constant DC level during and after configuration.
10/14/03	2.9	• Deleted section Functional Description: RocketIO Multi-Gigabit Transceiver (MGT), page 10. Added section Local Clocking, page 51. • Sections Slave-Serial Mode and Master-Serial Mode, page 56: Changed "rising" to "falling" edge with respect to DOUT. • Table 8, page 24 and Table 10, page 25: Corrected Input V_{REF} for HSTL_III-IV_18 from 1.08V to 1.1V.
12/10/03	3.0	• XC2VP2 through XC2VP70 speed grades -5, -6, and -7, and XC2VP100 speed grades -5 and -6, are released to **Production status**.
02/19/04	3.1	• Section BUFGMUX, page 50: Corrected the definition of the "presently selected clock" to be I0 or I1. Corrected signal names in Figure 61 and associated text from CLK0 and CLK1 to I0 and I1.
03/09/04	3.1.1	• Recompiled for backward compatibility with Acrobat 4 and above. No content changes.
04/22/04	3.2	• Section Clock De-skew, page 52: Removed reference to CLK2X as an option for DCM clock feedback.
06/30/04	4.0	Merged in DS110-2 (Module 2 of Virtex-II Pro X data sheet). Separate RocketIO and RocketIO X sections created.
11/17/04	4.1	• Figure 11, page 12: Corrected figure by removing coupling capacitors from input. • Section Rules for Combining I/O Standards in the Same Bank, page 29: Corrected I/O standard in the first example from LVDS_25_DCI to LVDS_25.
03/01/05	4.2	• Reassigned heading hierarchies for better agreement with content. • Table 7: Corrected VCCAUXTX and VCCAUXRX to AVCCAUXTX and AVCCAUXRX respectively. • Table 9: Corrected V_{OD} (output voltage) range for LVDSEXT_25. • Table 25: Corrected SelectRAM+ memory available for XC2VPX70 device. • Table 33: Updated configuration default bitstream lengths.
06/20/05	4.3	*No changes in Module 2 for this revision.*
09/15/05	4.4	• Table 1: Deleted SONET OC-192 protocol. • Table 3: Deleted RocketIO X primitives for SONET OC-192, 10 Gbit Ethernet, and Xilinx 10G (Aurora) protocols. • Changed all instances of 10.3125 Gb/s to 6.25 Gb/s. • Table 7: Changed RocketIO X VCCAUXRX from 1.5V globally to 1.5V for 8B/10B encoding, 1.8V for all other encoding protocols.

Date	Version	Revision
10/10/05	4.5	• Changed XC2VPX70 variable baud rate specification to fixed-rate operation at 4.25 Gb/s.
03/05/07	4.6	*No changes in Module 2 for this revision.*
11/05/07	4.7	• Updated copyright notice and legal disclaimer. • Debug Interface, page 19, and Boundary-Scan (JTAG, IEEE 1532) Mode, page 57: Updated IEEE 1149.1 compliance statement.
06/21/11	5.0	Added *Product Not Recommended for New Designs* banner.

Notice of Disclaimer

THE XILINX HARDWARE FPGA AND CPLD DEVICES REFERRED TO HEREIN (“PRODUCTS”) ARE SUBJECT TO THE TERMS AND CONDITIONS OF THE XILINX LIMITED WARRANTY WHICH CAN BE VIEWED AT http://www.xilinx.com/warranty.htm. THIS LIMITED WARRANTY DOES NOT EXTEND TO ANY USE OF PRODUCTS IN AN APPLICATION OR ENVIRONMENT THAT IS NOT WITHIN THE SPECIFICATIONS STATED IN THE XILINX DATA SHEET. ALL SPECIFICATIONS ARE SUBJECT TO CHANGE WITHOUT NOTICE. PRODUCTS ARE NOT DESIGNED OR INTENDED TO BE FAIL-SAFE OR FOR USE IN ANY APPLICATION REQUIRING FAIL-SAFE PERFORMANCE, SUCH AS LIFE-SUPPORT OR SAFETY DEVICES OR SYSTEMS, OR ANY OTHER APPLICATION THAT INVOKES THE POTENTIAL RISKS OF DEATH, PERSONAL INJURY, OR PROPERTY OR ENVIRONMENTAL DAMAGE (“CRITICAL APPLICATIONS”). USE OF PRODUCTS IN CRITICAL APPLICATIONS IS AT THE SOLE RISK OF CUSTOMER, SUBJECT TO APPLICABLE LAWS AND REGULATIONS.

Virtex-II Pro Data Sheet

The Virtex-II Pro Data Sheet contains the following modules:

- Virtex-II Pro and Virtex-II Pro X Platform FPGAs: Introduction and Overview (Module 1)
- Virtex-II Pro and Virtex-II Pro X Platform FPGAs: Functional Description (Module 2)
- Virtex-II Pro and Virtex-II Pro X Platform FPGAs: DC and Switching Characteristics (Module 3)
- Virtex-II Pro and Virtex-II Pro X Platform FPGAs: Pinout Information (Module 4)

Virtex-II Pro and Virtex-II Pro X Platform FPGAs: DC and Switching Characteristics

DS083 (v5.0) June 21, 2011 **Product Specification**

Virtex-II Pro[1] Electrical Characteristics

Virtex™-II Pro devices are provided in -7, -6, and -5 speed grades, with -7 having the highest performance.

Virtex-II Pro DC and AC characteristics are specified for both commercial and industrial grades. Except the operating temperature range or unless otherwise noted, all the DC and AC electrical parameters are the same for a particular speed grade (that is, the timing characteristics of a -6 speed grade industrial device are the same as for a -6 speed grade commercial device). However, only selected speed grades and/or devices might be available in the industrial range.

All supply voltage and junction temperature specifications are representative of worst-case conditions. The parameters included are common to popular designs and typical applications. Contact Xilinx for design considerations requiring more detailed information.

All specifications are subject to change without notice.

Virtex-II Pro DC Characteristics

Table 1: **Absolute Maximum Ratings**

Symbol	Description[1]		Virtex-II Pro X	Virtex-II Pro	Units
V_{CCINT}	Internal supply voltage relative to GND		–0.5 to 1.6		V
V_{CCAUX}	Auxiliary supply voltage relative to GND		–0.5 to 3.0		V
V_{CCO}	Output drivers supply voltage relative to GND		–0.5 to 3.75		V
V_{BATT}	Key memory battery backup supply		–0.5 to 4.05		V
V_{REF}	Input reference voltage		–0.3 to 3.75		V
V_{IN}	3.3V I/O input voltage relative to GND (user and dedicated I/Os)		–0.3 to 4.05[3]		V
	2.5V or below I/O input voltage relative to GND (user and dedicated I/Os)		–0.5 to V_{CCO} + 0.5		V
V_{TS}	Voltage applied to 3-state 3.3V output (user and dedicated I/Os)		–0.3 to 4.05[3]		V
	Voltage applied to 3-state 2.5V or below output (user and dedicated I/Os)		–0.5 to V_{CCO} + 0.5		V
AVCCAUXRX	Receive auxilliary supply voltage relative to GNDA (analog ground)		–0.5 to 2.0	–0.5 to 3.0	V
AVCCAUXTX	Transmit auxilliary supply voltage relative to GNDA (analog ground)		–0.5 to 3.0	–0.5 to 3.0	V
V_{TRX}	Terminal receive supply voltage relative to GND		–0.5 to 3.0	–0.5 to 3.0	V
V_{TTX}	Terminal transmit supply voltage relative to GND		–0.5 to 1.6	–0.5 to 3.0	V
T_{STG}	Storage temperature (ambient)		–65 to +150		°C
T_{SOL}	Maximum soldering temperature[2]	All regular FG/FF flip-chip packages	+220		°C
		Pb-free FGG256 wire-bond package	N/A	+260	°C
		Pb-free FGG456 and FGG676 wire-bond packages	N/A	+250	°C
T_J	Maximum junction temperature[2]		+125		°C

Notes:

1. Stresses beyond those listed under Absolute Maximum Ratings might cause permanent damage to the device. These are stress ratings only, and functional operation of the device at these or any other conditions beyond those listed under Operating Conditions is not implied. Exposure to Absolute Maximum Ratings conditions for extended periods of time might affect device reliability.
2. For soldering guidelines and thermal considerations, see the **Device Packaging and Thermal Characteristics Guide** information on the Xilinx website.
3. 3.3V I/O Absolute Maximum limit applied to DC and AC signals. Refer to **XAPP659** for more details.

1. Unless otherwise noted, "Virtex-II Pro" refers to members of the Virtex-II Pro and/or Virtex-II Pro X families.

© 2000–2011 Xilinx, Inc. All rights reserved. XILINX, the Xilinx logo, the Brand Window, and other designated brands included herein are trademarks of Xilinx, Inc. PowerPC is a trademark of IBM Corp. and is used under license. All other trademarks are the property of their respective owners.

Table 2: **Recommended Operating Conditions**

Symbol	Description	Grade	Virtex-II Pro X		Virtex-II Pro		Units
			Min	Max	Min	Max	
V_{CCINT}	Internal supply voltage relative to GND, T_J = 0 °C to +85°C	Comm.	1.425	1.575	1.425	1.575	V
	Internal supply voltage relative to GND, T_J = –40°C to +100°C	Indus.	1.425	1.575	1.425	1.575	V
V_{CCAUX}(1)	Auxiliary supply voltage relative to GND, T_J = 0 °C to +85°C	Comm.	2.375	2.625	2.375	2.625	V
	Auxiliary supply voltage relative to GND, T_J = –40°C to +100°C	Indus.	2.375	2.625	2.375	2.625	V
V_{CCO}(2,3)	Supply voltage relative to GND, T_J = 0 °C to +85°C	Comm.	1.2	3.45(5)	1.2	3.45(5)	V
	Supply voltage relative to GND, T_J = –40°C to +100°C	Indus.	1.2	3.45(5)	1.2	3.45(5)	V
V_{IN}	3.3V supply voltage relative to GND, T_J = 0 °C to +85°C	Comm.	GND – 0.2	3.45(5)	GND – 0.2	3.45(5)	V
	3.3V supply voltage relative to GND, T_J = –40°C to +100°C	Indus.	GND – 0.2	3.45(5)	GND – 0.2	3.45(5)	V
	2.5V and below supply voltage relative to GND, T_J = 0 °C to +85°C	Comm.	GND – 0.2	V_{CCO} + 0.2	GND – 0.2	V_{CCO} + 0.2	V
	2.5V and below supply voltage relative to GND, T_J = –40°C to +100°C	Indus.	GND – 0.2	V_{CCO} + 0.2	GND – 0.2	V_{CCO} + 0.2	V
V_{BATT}(4)	Battery voltage relative to GND, T_J = 0 °C to +85°C	Comm.	1.0	3.6	1.0	3.6	V
	Battery voltage relative to GND, T_J = –40°C to +100°C	Indus.	1.0	3.6	1.0	3.6	V
AVCCAUXRX(6)	Auxilliary receive supply voltage relative to GNDA	Comm.	1.425(7)	1.575(7)	2.375	2.625	V
		Indus.	1.425(7)	1.575(7)	2.375	2.625	V
AVCCAUXTX(6)	Auxilliary transmit supply voltage relative to GNDA	Comm.	2.375	2.625	2.375	2.625	V
		Indus.	2.375	2.625	2.375	2.625	V
V_{TRX}	Terminal receive supply voltage relative to GND	Comm.	0	2.625	1.6	2.625	V
		Indus.	0	2.625	1.6	2.625	V
V_{TTX}	Terminal transmit supply voltage relative to GND	Comm.	1.425	1.575	1.6	2.625	V
		Indus.	1.425	1.575	1.6	2.625	V

Notes:
1. Recommended maximum voltage droop for V_{CCAUX} is 10 mV/ms.
2. Configuration data is retained even if V_{CCO} drops to 0V.
3. For 3.3V I/O operation, refer to **XAPP659**, available on the Xilinx website at **www.xilinx.com**.
4. If battery is not used, connect V_{BATT} to GND or V_{CCAUX}.
5. For PCI and PCI-X, refer to **XAPP653**, available on the Xilinx website at **www.xilinx.com**.
6. **IMPORTANT!** The RocketIO transceivers have certain power guidelines that must be met, even if unused in the design. Please refer to the section entitled “Powering the RocketIO Transceivers” in the ***RocketIO Transceiver User Guide*** or ***RocketIO X Transceiver User Guide*** for more details.
7. For non-8B/10B-encoded data, the specification for AVCCAUXRX is 1.8V ±5% (1.71 – 1.89V).

Table 3: **DC Characteristics Over Recommended Operating Conditions**

Symbol	Description	Virtex-II Pro X			Virtex-II Pro			Units
		Min	Typ	Max	Min	Typ	Max	
V_{DRINT}	Data retention V_{CCINT} voltage (below which configuration data might be lost)	1.25			1.25			V
V_{DRI}	Data retention V_{CCAUX} voltage (below which configuration data might be lost)	2.0			2.0			V
I_{REF}	V_{REF} current per pin			10			10	µA
I_L	Input or output leakage current per pin (sample-tested)			10			10	µA
C_{IN}	Input capacitance (sample-tested)			10			10	pF
I_{RPU}	Pad pull-up (when selected) @ V_{in} = 0V, V_{CCO} = 2.5V (sample tested)			150			150	µA
I_{RPD}	Pad pull-down (when selected) @ V_{in} = 2.5V (sample-tested)			150			150	µA
I_{BATT} (1)	Battery supply current	Note (2)			Note (2)			nA
$I_{CCAUXTX}$	Operating AVCCAUXTX supply current		115			60	105	mA
$I_{CCAUXRX}$	Operating AVCCAUXRX supply current		85			35	75	mA
I_{TTX}	Operating I_{TTX} supply current when transmitter is AC-coupled		55			30		mA
	Operating I_{TTX} supply current when transmitter is DC-coupled	N/A	N/A	N/A		15		mA
I_{TRX}	Operating I_{TRX} supply current when receiver is AC-coupled		15			0		mA
	Operating I_{TRX} supply current when receiver is DC-coupled	N/A	N/A	N/A		15		
P_{CPU}	Power dissipation of PowerPC™ 405 processor block		0.9			0.9		mW/ MHz
P_{RXTX} (3)	Power dissipation of MGT @ 1.25 Gb/s per channel	N/A	N/A	N/A		230		mW
	Power dissipation of MGT @ 2.5 Gb/s per channel		290			310		mW
	Power dissipation of MGT @ 3.125 Gb/s per channel		310			350		mW
	Power dissipation of MGT @ 4.25 Gb/s per channel		450		N/A	N/A	N/A	mW
	Power dissipation of MGT @ 6.25 Gb/s per channel		525		N/A	N/A	N/A	mW

Notes:

1. Characterized, not tested.
2. Battery supply current (I_{BATT}):

	Device Unpowered	Device Powered	Units
25°C:	< 50	< 10	nA
85°C:	N/A	< 10	nA

3. Total dissipation of fully operational PMA and PCS combined. This power is the average power supply dissipation per MGT. The averaging was done by simultaneously turning on all eight transceivers and dividing the total power supply dissipation by eight.

Table 4: **Quiescent Supply Current**

Symbol	Description	Device	Typ(1)	Max	Units
I_{CCINTQ}	Quiescent V_{CCINT} supply current	XC2VP2	20	300	mA
		XC2VP4	30	400	mA
		XC2VP7	35	500	mA
		XC2VP20	40	600	mA
		XC2VPX20	40	600	mA
		XC2VP30	50	800	mA
		XC2VP40	60	1050	mA
		XC2VP50	70	1250	mA
		XC2VP70	85	1700	mA
		XC2VPX70	85	1700	mA
		XC2VP100	100	2200	mA
I_{CCOQ}	Quiescent V_{CCO} supply current	XC2VP2	1.0	8.0	mA
		XC2VP4	1.0	8.0	mA
		XC2VP7	1.0	8.0	mA
		XC2VP20	1.25	10	mA
		XC2VPX20	1.25	10	mA
		XC2VP30	1.25	10	mA
		XC2VP40	1.25	10	mA
		XC2VP50	1.5	12	mA
		XC2VP70	1.5	12	mA
		XC2VPX70	1.5	12	mA
		XC2VP100	1.75	15	mA
I_{CCAUXQ}	Quiescent V_{CCAUX} supply current	XC2VP2	5	50	mA
		XC2VP4	5	50	mA
		XC2VP7	5	50	mA
		XC2VP20	10	75	mA
		XC2VPX20	10	75	mA
		XC2VP30	10	75	mA
		XC2VP40	10	75	mA
		XC2VP50	20	100	mA
		XC2VP70	20	100	mA
		XC2VPX70	20	100	mA
		XC2VP100	20	125	mA

Notes:
1. Typical values are specified at nominal voltage, 25° C.
2. Quiescent current parameter values are specified for Commercial Grade. For Industrial Grade values, multiply Commercial Grade values by 1.5.
3. With no output current loads, no active input pull-up resistors, all I/O pins are 3-state and floating.
4. If DCI or differential signaling is used, more accurate quiescent current estimates can be obtained by using the Power Estimator or XPOWER™.

Power-On Power Supply Requirements

Xilinx FPGAs require a certain amount of supply current during power-on to insure proper device initialization. The actual current consumed depends on the power-on ramp rate of the power supply.

The V_{CCINT} power supply must ramp on, monotonically, no faster than 200 µs and no slower than 50 ms. Ramp-on is defined as: 0 V_{DC} to minimum supply voltages (see Table 2).

V_{CCAUX} and V_{CCO} can power on at any ramp rate. Power supplies can be turned on in any sequence.

Table 5 shows the minimum current required by Virtex-II Pro devices for proper power-on and configuration.

If the current minimums shown in Table 5 are met, the device powers on properly after all three supplies have passed through their power-on reset threshold voltages.

Once initialized and configured, use the power calculator to estimate current drain on these supplies.

For more information on V_{CCAUX}, V_{CCO}, and configuration mode, refer to Chapter 3 in the *Virtex-II Pro Platform FPGA User Guide*.

Table 5: **Power-On Current for Virtex-II Pro Devices**

Symbol	Device											Units
	XC2VP2	XC2VP4	XC2VP7	XC2VP20	XC2VPX20	XC2VP30	XC2VP40	XC2VP50	XC2VP70	XC2VPX70	XC2VP100	
$I_{CCINTMIN}$	500	500	500	600	600	800	1050	1250	1700	1700	2200	mA
$I_{CCAUXMIN}$	250	250	250	250	250	250	250	250	250	250	250	mA
I_{CCOMIN}	100	100	100	100	100	100	100	100	100	100	100	mA

Notes:
1. Power-on current parameter values are specified for Commercial Grade. For Industrial Grade values, multiply Commercial Grade values by 1.5.
2. I_{CCOMIN} values listed here apply to the entire device (all banks).

General Power Supply Requirements

Proper decoupling of all FPGA power supplies is essential. Consult Xilinx Application Note **XAPP623** for detailed information on power distribution system design.

V_{CCAUX} powers critical resources in the FPGA. Therefore, this supply voltage is especially susceptible to power supply noise. V_{CCAUX} can share a power plane with V_{CCO}, but only if V_{CCO} does not have excessive noise. Staying within simultaneously switching output (SSO) limits is essential for keeping power supply noise to a minimum. Refer to **XAPP689**, "Managing Ground Bounce in Large FPGAs," to determine the number of simultaneously switching outputs allowed per bank at the package level.

Changes in V_{CCAUX} voltage beyond 200 mV peak-to-peak should take place at a rate no faster than 10 mV per millisecond.

Recommended practices that can help reduce jitter and period distortion are described in Xilinx Answer Record 13756.

SelectIO-Ultra DC Input and Output Levels

Values for V_{IL} and V_{IH} are recommended input voltages. Values for I_{OL} and I_{OH} are guaranteed over the recommended operating conditions at the V_{OL} and V_{OH} test points. Only selected standards are tested. These are chosen to ensure that all standards meet their specifications. The selected standards are tested at minimum V_{CCO} with the respective V_{OL} and V_{OH} voltage levels shown. Other standards are sample tested.

Table 6: **DC Input and Output Levels**

IOSTANDARD Attribute	V_{IL}		V_{IH}		V_{OL}	V_{OH}	I_{OL}	I_{OH}
	V, min	V, max	V, min	V, max	V, max	V, min	mA	mA
LVTTL	–0.2	0.8	2.0	3.45	0.4	2.4	24	–24
LVCMOS33	–0.2	0.8	2.0	3.45	0.4	V_{CCO} – 0.4	24	–24
LVCMOS25	–0.2	0.7	1.7	V_{CCO} + 0.4	0.4	V_{CCO} – 0.4	24	–24
LVCMOS18	–0.2	30% V_{CCO}	70% V_{CCO}	V_{CCO} + 0.4	0.4	V_{CCO} – 0.45	16	–16
LVCMOS15	–0.2	30% V_{CCO}	70% V_{CCO}	V_{CCO} + 0.4	0.4	V_{CCO} – 0.45	16	–16
PCI33_3	–0.2	30% V_{CCO}	50% V_{CCO}	3.6	10% V_{CCO}	90% V_{CCO}		
PCI66_3	–0.2	30% V_{CCO}	50% V_{CCO}	3.6	10% V_{CCO}	90% V_{CCO}		
PCIX	–0.2	Note (1)	Note (1)	Note (1)	Note (1)	Note (1)	Note (1)	Note (1)
GTLP	–0.2	V_{REF} – 0.1	V_{REF} + 0.1	V_{CCO} + 0.4	0.6	n/a	36	n/a
GTL	–0.2	V_{REF} – 0.05	V_{REF} + 0.05	V_{CCO} + 0.4	0.4	n/a	40	n/a
HSTL_I	–0.2	V_{REF} – 0.1	V_{REF} + 0.1	V_{CCO} + 0.4	0.4(2)	V_{CCO} – 0.4	8(2)	–8(2)
HSTL_II	–0.2	V_{REF} – 0.1	V_{REF} + 0.1	V_{CCO} + 0.4	0.4(2)	V_{CCO} – 0.4	16(2)	–16(2)
HSTL_III	–0.2	V_{REF} – 0.1	V_{REF} + 0.1	V_{CCO} + 0.4	0.4(2)	V_{CCO} – 0.4	24(2)	–8(2)
HSTL_IV	–0.2	V_{REF} – 0.1	V_{REF} + 0.1	V_{CCO} + 0.4	0.4(2)	V_{CCO} – 0.4	48(2)	–8(2)
SSTL2_I	–0.2	V_{REF} – 0.15	V_{REF} + 0.15	V_{CCO} + 0.3	V_{TT} – 0.61	V_{TT} + 0.61	8.1	–8.1
SSTL2_II	–0.2	V_{REF} – 0.15	V_{REF} + 0.15	V_{CCO} + 0.3	V_{TT} – 0.81	V_{TT} + 0.81	16.2	–16.2
SSTL18_I	–0.2	V_{REF} – 0.125	V_{REF} + 0.125	V_{CCO} + 0.3	V_{TT} – 0.61	V_{TT} + 0.61	6.7	–6.7
SSTL18_II	–0.2	V_{REF} – 0.125	V_{REF} + 0.125	V_{CCO} + 0.3	V_{TT} – 0.61	V_{TT} + 0.61	13.4	–13.4

Notes:
1. Tested according to relevant specifications.
2. This applies to 1.5V and 1.8V HSTL.

LDT DC Specifications (LDT_25)

Table 7: **LDT DC Specifications**

DC Parameter	Symbol	Conditions	Min	Typ	Max	Units
Supply Voltage	V_{CCO}		2.38	2.5	2.63	V
Differential Output Voltage	V_{OD}	R_T = 100 ohm across Q and $\overline{Q}$ signals	495	600	715	mV
Change in V_{OD} Magnitude	ΔV_{OD}		–15		15	mV
Output Common Mode Voltage	V_{OCM}	R_T = 100 ohm across Q and $\overline{Q}$ signals	495	600	715	mV
Change in V_{OS} Magnitude	ΔV_{OCM}		–15		15	mV
Input Differential Voltage	V_{ID}		200	600	1000	mV
Change in V_{ID} Magnitude	ΔV_{ID}		–15		15	mV
Input Common Mode Voltage	V_{ICM}		440	600	780	mV
Change in V_{ICM} Magnitude	ΔV_{ICM}		–15		15	mV

LVDS DC Specifications (LVDS_25)

Table 8: **LVDS DC Specifications**

DC Parameter	Symbol	Conditions	Min	Typ	Max	Units
Supply Voltage	V_{CCO}		2.38	2.5	2.63	V
Output High Voltage for Q and $\overline{Q}$	V_{OH}	R_T = 100 Ω across Q and $\overline{Q}$ signals			1.602	V
Output Low Voltage for Q and $\overline{Q}$	V_{OL}	R_T = 100 Ω across Q and $\overline{Q}$ signals	0.898			V
Differential Output Voltage (Q – $\overline{Q}$), Q = High ($\overline{Q}$ – Q), $\overline{Q}$ = High	V_{ODIFF}	R_T = 100 Ω across Q and $\overline{Q}$ signals	247	350	454	mV
Output Common-Mode Voltage	V_{OCM}	R_T = 100 Ω across Q and $\overline{Q}$ signals	1.125	1.250	1.375	V
Differential Input Voltage (Q – $\overline{Q}$), Q = High ($\overline{Q}$ – Q), $\overline{Q}$ = High	V_{IDIFF}	Common-mode input voltage = 1.25V	100	350	600	mV
Input Common-Mode Voltage	V_{ICM}	Differential input voltage = ±350 mV	0.3	1.2	2.2	V

Extended LVDS DC Specifications (LVDSEXT_25)

Table 9: **Extended LVDS DC Specifications**

DC Parameter	Symbol	Conditions	Min	Typ	Max	Units
Supply Voltage	V_{CCO}		2.38	2.5	2.63	V
Output High Voltage for Q and $\overline{Q}$	V_{OH}	R_T = 100 Ω across Q and $\overline{Q}$ signals			1.785	V
Output Low Voltage for Q and $\overline{Q}$	V_{OL}	R_T = 100 Ω across Q and $\overline{Q}$ signals	0.715			V
Differential Output Voltage (Q – $\overline{Q}$), Q = High ($\overline{Q}$ – Q), $\overline{Q}$ = High	V_{ODIFF}	R_T = 100 Ω across Q and $\overline{Q}$ signals	440		820	mV
Output Common-Mode Voltage	V_{OCM}	R_T = 100 Ω across Q and $\overline{Q}$ signals	1.125	1.250	1.375	V
Differential Input Voltage (Q – $\overline{Q}$), Q = High ($\overline{Q}$ – Q), $\overline{Q}$ = High	V_{IDIFF}	Common-mode input voltage = 1.25V	100		1000	mV
Input Common-Mode Voltage	V_{ICM}	Differential input voltage = ±350 mV	0.3	1.2	2.2	V

LVPECL DC Specifications (LVPECL_25)

These values are valid when driving a 100 Ω differential load only, i.e., a 100 Ω resistor between the two receiver pins. The V_{OH} levels are 200 mV below standard LVPECL levels and are compatible with devices tolerant of lower common-mode ranges. Table 10 summarizes the DC output specifications of LVPECL. For more information on using LVPECL, see the *Virtex-II Pro Platform FPGA User Guide*.

Table 10: **LVPECL DC Specifications**

DC Parameter	V_{CCO} = 2.375V		V_{CCO} = 2.5V		V_{CCO} = 2.625V		Units
	Min	Max	Min	Max	Min	Max	
V_{OH}	1.35	1.495	1.475	1.62	1.6	1.745	V
V_{OL}	0.565	0.755	0.69	0.88	0.815	1.005	V
V_{IH}	0.8	2.0	0.8	2.0	0.8	2.0	V
V_{IL}	0.5	1.7	0.5	1.7	0.5	1.7	V
Differential Input Voltage	0.100	1.5	0.100	1.5	0.100	1.5	V

RocketIO DC Input and Output Levels

Table 11: **RocketIO X Input/Output Voltage Specifications**

Parameter	Symbol	Conditions	Min	Typ	Max	Units
Peak-to-Peak Differential Input Voltage(1)	DV_{IN}		250		2000	mV
Single-Ended Output Voltage Swing(2,3)	DV_{OUT}		0	400	900	mV
Peak-to-Peak Differential Output Voltage(2,3)	DV_{PPOUT}		0	800	1800	mV

Notes:
1. See Table 24, page 15, for minimum eye sensitivity.
2. Output swing levels are selectable using TXDOWNLEVEL attribute. Refer to the ***RocketIO X Transceiver User Guide*** for details.
3. Output preemphasis levels are selectable using the TXEMPHLEVEL attribute. Refer to the ***RocketIO X Transceiver User Guide*** for details.

Table 12: **RocketIO Input/Output Voltage Specifications**

Parameter	Symbol	Conditions	Min	Typ	Max	Units
Peak-to-Peak Differential Input Voltage	DV_{IN}		175		2000	mV
Differential Input Impedance	$DIMP_{IN}$	TERMINATION_IMP = 50	90		125	Ω
		TERMINATION_IMP = 75	135		187.5	Ω
Single-Ended Output Voltage Swing(1,2)	DV_{OUT}		400		800	mV
Peak-to-Peak Differential Output Voltage(1,2)	DV_{PPOUT}		800	800	1600	mV

Notes:
1. Output swing levels are selectable using TX_DIFF_CTRL attribute. Refer to the ***RocketIO Transceiver User Guide*** for details.
2. Output preemphasis levels are selectable at 10% (default), 20%, 25%, and 33% using the TX_PREEMPHASIS attribute. Refer to the ***RocketIO Transceiver User Guide*** for details.

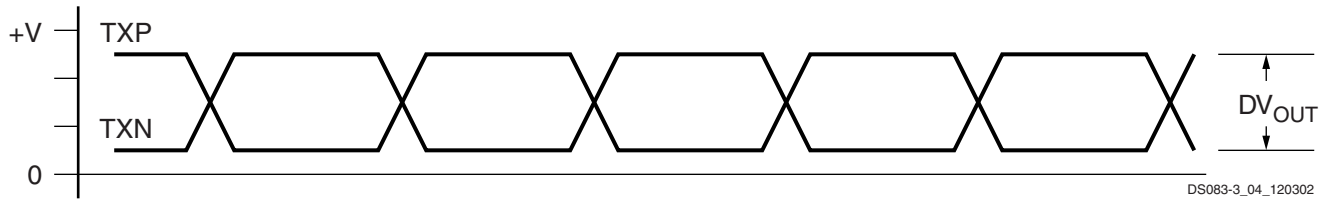

Figure 1: **Single-Ended Output Voltage Swing**

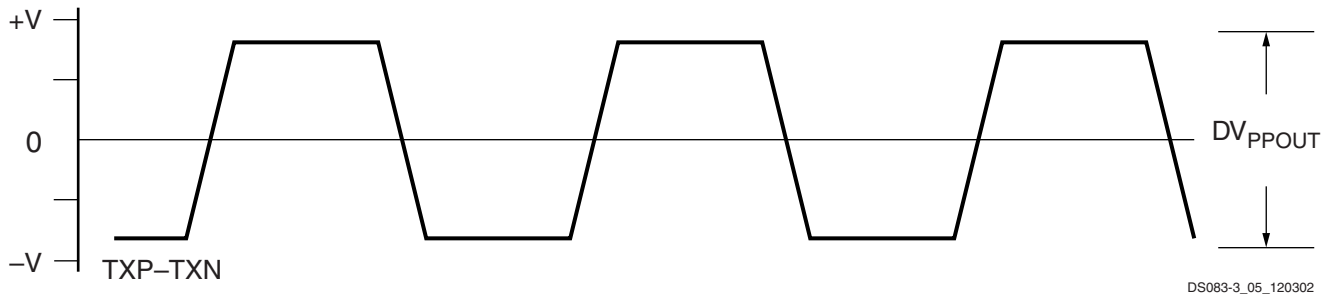

Figure 2: **Peak-to-Peak Differential Output Voltage**

Virtex-II Pro Performance Characteristics

This section provides the performance characteristics of some common functions and designs implemented in Virtex-II Pro devices. The numbers reported here are fully characterized worst-case values. Note that these values are subject to the same guidelines as Virtex-II Pro Switching Characteristics (speed files).

Table 13 provides pin-to-pin values (in nanoseconds) including IOB delays; that is, delay through the device from input pin to output pin. In the case of multiple inputs and outputs, the worst delay is reported.

Table 13: **Pin-to-Pin Performance**

Description	Device Used & Speed Grade	Pin-to-Pin Performance (with I/O Delays)	Units
Basic Functions:			
16-bit Address Decoder	XC2VP20FF1152-6	7.20	ns
32-bit Address Decoder	XC2VP20FF1152-6	8.08	ns
64-bit Address Decoder	XC2VP20FF1152-6	8.15	ns
4:1 MUX	XC2VP20FF1152-6	3.85	ns
8:1 MUX	XC2VP20FF1152-6	7.24	ns
16:1 MUX	XC2VP20FF1152-6	7.30	ns
32:1 MUX	XC2VP20FF1152-6	7.64	ns
Combinatorial (pad to LUT to pad)	XC2VP20FF1152-6	3.26	ns
Memory:			
Block RAM			
Pad to setup	XC2VP20FF1152-6	1.72	ns
Clock to Pad	XC2VP20FF1152-6	6.63	ns
Distributed RAM			
Pad to setup	XC2VP20FF1152-6	1.78	ns
Clock to Pad	XC2VP20FF1152-6	4.12	ns

Table 14 shows internal (register-to-register) performance. Values are reported in MHz.

Table 14: **Register-to-Register Performance**

Description	Device Used & Speed Grade	Register-to-Register Performance	Units
Basic Functions:			
16-bit Address Decoder	XC2VP20FF1152-6	547	MHz
32-bit Address Decoder	XC2VP20FF1152-6	392	MHz
64-bit Address Decoder	XC2VP20FF1152-6	310	MHz
4:1 MUX	XC2VP20FF1152-6	710	MHz
8:1 MUX	XC2VP20FF1152-6	609	MHz
16:1 MUX	XC2VP20FF1152-6	472	MHz
32:1 MUX	XC2VP20FF1152-6	400	MHz
Register to LUT to Register	XC2VP20FF1152-6	1046	MHz
8-bit Adder	XC2VP20FF1152-6	337	MHz
16-bit Adder	XC2VP20FF1152-6	334	MHz
32-bit Adder	XC2VP20FF1152-6	252	MHz
64-bit Adder	XC2VP20FF1152-6	202	MHz
128-bit Adder	XC2VP20FF1152-6	131	MHz
24-bit Counter	XC2VP20FF1152-6	309	MHz
64-bit Counter	XC2VP20FF1152-6	207	MHz
64-bit Accumulator	XC2VP20FF1152-6	150	MHz
Multiplier 18x18 (with Block RAM inputs)	XC2VP20FF1152-6	135	MHz
Multiplier 18x18 (with Register inputs)	XC2VP20FF1152-6	147	MHz
Memory:			
Block RAM			
Single-Port 4096 x 4 bits	XC2VP20FF1152-6	355	MHz
Distributed RAM			
Single-Port 16 x 8-bit	XC2VP20FF1152-6	555	MHz
Single-Port 32 x 8-bit	XC2VP20FF1152-6	557	MHz
Single-Port 64 x 8-bit	XC2VP20FF1152-6	408	MHz
Single-Port 128 x 8-bit	XC2VP20FF1152-6	336	MHz
Dual-Port 16 x 8-bit	XC2VP20FF1152-6	549	MHz
Dual-Port 32 x 8-bit	XC2VP20FF1152-6	460	MHz
Dual-Port 64 x 8-bit	XC2VP20FF1152-6	407	MHz

Virtex-II Pro Switching Characteristics

Switching characteristics are specified on a per-speed-grade basis and can be designated as Advance, Preliminary, or Production. Note that Virtex-II Pro Performance Characteristics are subject to these guidelines, as well. Each designation is defined as follows:

Advance: These speed files are based on simulations only and are typically available soon after device design specifications are frozen. Although speed grades with this designation are considered relatively stable and conservative, some under-reporting might still occur.

Preliminary: These speed files are based on complete ES (engineering sample) silicon characterization. Devices and speed grades with this designation are intended to give a better indication of the expected performance of production silicon. The probability of under-reporting delays is greatly reduced as compared to Advance data.

Production: These speed files are released once enough production silicon of a particular device family member has been characterized to provide full correlation between speed files and devices over numerous production lots. There is no under-reporting of delays, and customers receive formal notification of any subsequent changes. Typically, the slowest speed grades transition to Production before faster speed grades.

Since individual family members are produced at different times, the migration from one category to another depends completely on the status of the fabrication process for each device. Table 15 correlates the current status of each Virtex-II Pro device with a corresponding speed file designation.

All specifications are always representative of worst-case supply voltage and junction temperature conditions.

Table 15: **Virtex-II Pro Device Speed Grade Designations**

Device	Speed Grade Designations		
	Advance	Preliminary	Production
XC2VP2			-7, -6, -5
XC2VP4			-7, -6, -5
XC2VP7			-7, -6, -5
XC2VP20			-7, -6, -5
XC2VPX20		-6, -5	
XC2VP30			-7, -6, -5
XC2VP40			-7, -6, -5
XC2VP50			-7, -6, -5
XC2VP70			-7, -6, -5
XC2VPX70		-6, -5	
XC2VP100			-6, -5

Testing of Switching Characteristics

All devices are 100% functionally tested. Internal timing parameters are derived from measuring internal test patterns. Listed below are representative values. For more specific, more precise, and worst-case guaranteed data, use the values reported by the static timing analyzer (TRCE in the Xilinx Development System) and back-annotate to the simulation net list. Unless otherwise noted, values apply to all Virtex-II Pro devices.

PowerPC Switching Characteristics

Table 16: **Processor Clocks Absolute AC Characteristics**

Description	Speed Grade						Units
	-7		-6		-5		
	Min	Max	Min	Max	Min	Max	
CPMC405CLOCK frequency	0	400(1)	0	350(1)	0	300	MHz
JTAGC405TCK frequency(2)	0	200	0	175	0	150	MHz
PLBCLK(3)	0	400	0	350	0	300	MHz
BRAMDSOCMCLK(3)	0	400	0	350	0	300	MHz
BRAMISOCMCLK(3)	0	400	0	350	0	300	MHz

Notes:

1. **IMPORTANT!** When CPMC405CLOCK runs at speeds greater than 350 MHz in -7 Commercial grade dual-processor devices, or greater than 300 MHz in -6 Industrial grade dual-processor devices, users must implement the technology presented in **XAPP755**, "PowerPC 405 Clock Macro for -7(C) and -6(I) Speed Grade Dual-Processor Devices." Refer to Table 1, Module 1 to identify dual-processor devices.
2. The theoretical maximum frequency of this clock is one-half the CPMC405CLOCK. However, the achievable maximum is dependent on the system, and will be much less.
3. The theoretical maximum frequency of these clocks is equal to the CPMC405CLOCK. However, the achievable maximum is dependent on the system. Please see ***PowerPC 405 Processor Block Reference Guide*** and **XAPP640** for more information.

Table 17: **Processor Block Switching Characteristics**

		Speed Grade			
Description	**Symbol**	**-7**	**-6**	**-5**	**Units**
Setup and Hold Relative to Clock (CPMC405CLOCK)					
Device Control Register Bus control inputs	$T_{PCCK_}DCR/T_{PCKC_}DCR$	0.38/–0.18	0.44/–0.20	0.48/–0.23	ns, min
Device Control Register Bus data inputs	$T_{PDCK_}DCR/T_{PCKD_}DCR$	0.65/–0.01	0.75/–0.01	0.82/–0.02	ns, min
Clock and Power Management control inputs	$T_{PCCK_}CPM/T_{PCKC_}CPM$	0.16/ 0.03	0.19/ 0.03	0.20/ 0.03	ns, min
Reset control inputs	$T_{PCCK_}RST/T_{PCKC_}RST$	0.16/ 0.03	0.19/ 0.03	0.20/ 0.03	ns, min
Debug control inputs	$T_{PCCK_}DBG/T_{PCKC_}DBG$	0.27/ 0.30	0.31/ 0.35	0.34/ 0.38	ns, min
Trace control inputs	$T_{PCCK_}TRC/T_{PCKC_}TRC$	1.37/–0.41	1.57/–0.48	1.73/–0.52	ns, min
External Interrupt Controller control inputs	$T_{PCCK_}EIC/T_{PCKC_}EIC$	0.57/–0.22	0.66/–0.25	0.72/–0.27	ns, min
Clock to Out					
Device Control Register Bus control outputs	$T_{PCKCO_}DCR$	1.32	1.52	1.67	ns, max
Device Control Register Bus address outputs	$T_{PCKAO_}DCR$	1.72	1.98	2.17	ns, max
Device Control Register Bus data outputs	$T_{PCKDO_}DCR$	1.76	2.02	2.22	ns, max
Clock and Power Management control outputs	$T_{PCKCO_}CPM$	1.26	1.45	1.59	ns, max
Reset control outputs	$T_{PCKCO_}RST$	1.32	1.51	1.66	ns, max
Debug control outputs	$T_{PCKCO_}DBG$	1.94	2.22	2.44	ns, max
Trace control outputs	$T_{PCKCO_}TRC$	1.35	1.56	1.71	ns, max
Clock					
CPMC405CLOCK minimum pulse width, high	T_{CPWH}	1.25	1.42	1.66	ns, min
CPMC405CLOCK minimum pulse width, low	T_{CPWL}	1.25	1.42	1.66	ns, min

Table 18: **Processor Block PLB Switching Characteristics**

		Speed Grade			
Description	**Symbol**	**-7**	**-6**	**-5**	**Units**
Setup and Hold Relative to Clock (PLBCLK)					
Processor Local Bus(ICU/DCU) control inputs	$T_{PCCK_}PLB/T_{PCKC_}PLB$	0.98/ 0.18	1.12/ 0.21	1.23/ 0.23	ns, min
Processor Local Bus (ICU/DCU) data inputs	$T_{PDCK_}PLB/T_{PCKD_}PLB$	0.62/ 0.16	0.71/ 0.18	0.78/ 0.20	ns, min
Clock to Out					
Processor Local Bus(ICU/DCU) control outputs	$T_{PCKCO_}PLB$	1.34	1.54	1.69	ns, max
Processor Local Bus(ICU/DCU) address bus outputs	$T_{PCKAO_}PLB$	1.16	1.34	1.47	ns, max
Processor Local Bus(ICU/DCU) data bus outputs	$T_{PCKDO_}PLB$	1.44	1.65	1.81	ns, max

Table 19: **Processor Block JTAG Switching Characteristics**

		Speed Grade			
Description	**Symbol**	**-7**	**-6**	**-5**	**Units**
Setup and Hold Relative to Clock (JTAGC405TCK)					
JTAG control inputs	$T_{PCCK_}$JTAG/ $T_{PCKC_}$JTAG	0.80/ 0.70	0.80/ 0.70	0.88/ 0.77	ns, min
JTAG reset input	$T_{PCCK_}$JTAGRST/ $T_{PCKC_}$JTAGRST	0.80/ 0.70	0.80/ 0.70	0.88/ 0.77	ns, min
Clock to Out					
JTAG control outputs	$T_{PCKCO_}$JTAG	1.34	1.54	1.69	ns, max

Table 20: **PowerPC 405 Data-Side On-Chip Memory Switching Characteristics**

		Speed Grade			
Description	**Symbol**	**-7**	**-6**	**-5**	**Units**
Setup and Hold Relative to Clock (BRAMDSOCMCLK)					
Data-Side On-Chip Memory data bus inputs	$T_{PDCK_}$DSOCM/ $T_{PCKD_}$DSOCM	0.73/ 0.83	0.84/ 0.95	0.92/ 1.05	ns, min
Clock to Out					
Data-Side On-Chip Memory control outputs	$T_{PCKCO_}$DSOCM	1.58	1.82	1.99	ns, max
Data-Side On-Chip Memory address bus outputs	$T_{PCKAO_}$DSOCM	1.46	1.68	1.84	ns, max
Data-Side On-Chip Memory data bus outputs	$T_{PCKDO_}$DSOCM	0.90	1.03	1.13	ns, max

Table 21: **PowerPC 405 Instruction-Side On-Chip Memory Switching Characteristics**

		Speed Grade			
Description	**Symbol**	**-7**	**-6**	**-5**	**Units**
Setup and Hold Relative to Clock (BRAMISOCMCLK)					
Instruction-Side On-Chip Memory data bus inputs	$T_{PDCK_}$ISOCM/ $T_{PCKD_}$ISOCM	0.81/ 0.68	0.93/ 0.78	1.02/ 0.86	ns, min
Clock to Out					
Instruction-Side On-Chip Memory control outputs	$T_{PCKCO_}$ISOCM	1.33	1.53	1.68	ns, max
Instruction-Side On-Chip Memory address bus outputs	$T_{PCKAO_}$ISOCM	1.52	1.75	1.92	ns, max
Instruction-Side On-Chip Memory data bus outputs	$T_{PCKDO_}$ISOCM	1.35	1.55	1.70	ns, max

RocketIO Switching Characteristics

Table 22: **RocketIO X Reference Clock Switching Characteristics**

			All Speed Grades			
Description	**Symbol**	**Conditions**	**Min**	**Typ**	**Max**	**Units**
Reference Clock frequency range(1)	F_{GCLK}		62.5		425	MHz
Reference Clock frequency tolerance	F_{GTOL}				±350	ppm
Reference Clock rise time	T_{RCLK}	20% – 80%		75		ps
Reference Clock fall time	T_{FCLK}	20% – 80%		75		ps
Reference Clock duty cycle	T_{DCREF}		45	50	55	%
Reference Clock total jitter, peak-peak	T_{GJTT}	3.125 Gb/s – 6.25 Gb/s			30	ps
		2.488 Gb/s – 3.125 Gb/s			40	ps
Clock recovery frequency acquisition time, from Power-up to High state of PMARXLOCK	T_{LOCK}			100		µs
Clock recovery phase acquisition time, from Data to High state of PMARXLOCK	T_{PHASE}			40	60	µs

Notes:
1. BREFCLK should be used for all serial bit rates up to the maximum shown.

Table 23: **RocketIO Reference Clock Switching Characteristics**

			All Speed Grades			
Description	**Symbol**	**Conditions**	**Min**	**Typ**	**Max**	**Units**
Reference Clock frequency range(1)	F_{GCLK}	Full rate operation	50		156.25	MHz
		Half rate operation(2) (2X oversampling)	60		100	MHz
Reference Clock frequency tolerance	F_{GTOL}				±100	ppm
Reference Clock rise time	T_{RCLK}	20% – 80%		600	1000	ps
Reference Clock fall time	T_{FCLK}	20% – 80%		600	1000	ps
Reference Clock duty cycle	T_{DCREF}		45	50	55	%
Reference Clock total jitter, peak-peak(3)	T_{GJTT}	2.501 Gb/s – 3.125 Gb/s			40	ps
		1.061 Gb/s – 2.5 Gb/s			50	ps
		< 1.06 Gb/s			120	ps
Clock recovery frequency acquisition time	T_{LOCK}				10	µs
Clock recovery phase acquisition time	T_{PHASE}			960		bits(4)

Notes:
1. BREFCLK/BREFCLK2 can be used for all serial bit rates up to the maximum shown. REFCLK/REFCLK2 can be used for serial bit rates up to 2.5 Gb/s (REFCLK = 125 MHz). All other parameters apply equally to REFCLK, REFCLK2, BREFCLK, and BREFCLK2 except as noted.
2. For serial rates under 1 Gb/s, the 3X (or greater) oversampling techniques described in **XAPP572** are required to meet the transmit jitter and receive jitter tolerance specifications defined in this data sheet.
3. Measured at the package pin. For reference clock frequencies equal to or above 125 MHz, BREFCLK/BREFCLK2 must be used.
4. 8B/10B-type bitstream.

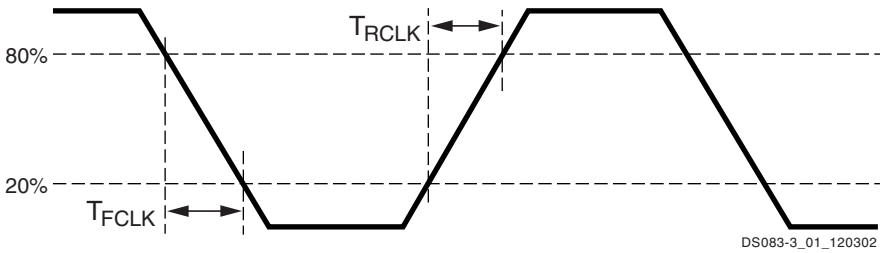

Figure 3: **Reference Clock Timing Parameters**

Table 24: **RocketIO X Receiver Switching Characteristics**(1)

Description	Symbol	Conditions	Min	Typ	Max	Units
Receive total jitter tolerance using default equalization and PRBS-15 pattern	T_{JTOL}	2.488 Gb/s		0.80	0.65	UI(2)
		3.125 Gb/s		0.80	0.65	UI
		4.25 Gb/s		0.80	0.65	UI
		6.25 Gb/s		0.80	0.65	UI
Receive random jitter tolerance	T_{RJTOL}	2.488 Gb/s		0.30		UI
		3.125 Gb/s		0.30		UI
		4.25 Gb/s		0.30		UI
		6.25 Gb/s		0.30		UI
Receive sinusoidal jitter tolerance measured at 70 MHz	T_{SJTOL}	2.488 Gb/s		0.30	0.15	UI
		3.125 Gb/s		0.30	0.15	UI
		4.25 Gb/s		0.30	0.15	UI
		6.25 Gb/s		0.30	0.15	UI
Receive deterministic jitter tolerance	T_{DJTOL}	2.488 Gb/s		0.55	0.45	UI
		3.125 Gb/s		0.55	0.45	UI
		4.25 Gb/s		0.55	0.45	UI
		6.25 Gb/s		0.50	0.45	UI
Receive latency(3)	T_{RXLAT}			25	34(4)	RXUSRCLK cycles
RXUSRCLK duty cycle	T_{RXDC}		45	50	55	%
RXUSRCLK2 duty cycle	T_{RX2DC}		45	50	55	%
Differential receive input sensitivity	V_{EYE}			120	250	mV

Notes:
1. The XC2VPX70 operates at a fixed 4.25 Gb/s baud rate.
2. UI = Unit Interval
3. Receive latency delay RXP/RXN to RXDATA. Refer to ***RocketIO X Transceiver User Guide*** for more information on calculating latency.
4. This maximum may occur when certain conditions are present and clock correction and channel bonding are enabled. If these functions are both disabled, the maximum will be near the typical values.

Table 25: **RocketIO Receiver Switching Characteristics**

Description	Symbol	Conditions	Min	Typ	Max	Units
Receive total jitter tolerance	T_{JTOL}	2.126 Gb/s – 3.125 Gb/s			0.65	UI(1)
		1.0626 Gb/s – 2.125 Gb/s			0.65	UI
		1.0 Gb/s – 1.0625 Gb/s			0.68	UI
		600 Mb/s – 999 Mb/s			0.68(2)	UI
Receive deterministic jitter tolerance	T_{DJTOL}	2.126 Gb/s – 3.125 Gb/s			0.41	UI
		1.0626 Gb/s – 2.125 Gb/s			0.43	UI
		1.0 Gb/s – 1.0625 Gb/s			0.47	UI
		600 Mb/s – 999 Mb/s			0.47(2)	
Receive latency(3)	T_{RXLAT}			25	42(4)	RXUSRCLK cycles
RXUSRCLK duty cycle	T_{RXDC}		45	50	55	%
RXUSRCLK2 duty cycle	T_{RX2DC}		45	50	55	%

Notes:
1. UI = Unit Interval
2. The oversampling techniques described in **XAPP572** are required to meet these specifications for serial rates less than 1 Gb/s.
3. Receive latency delay RXP/RXN to RXDATA. Refer to ***RocketIO Transceiver User Guide*** for more information on calculating latency.
4. This maximum may occur when certain conditions are present and clock correction and channel bonding are enabled. If these functions are both disabled, the maximum will be near the typical values.

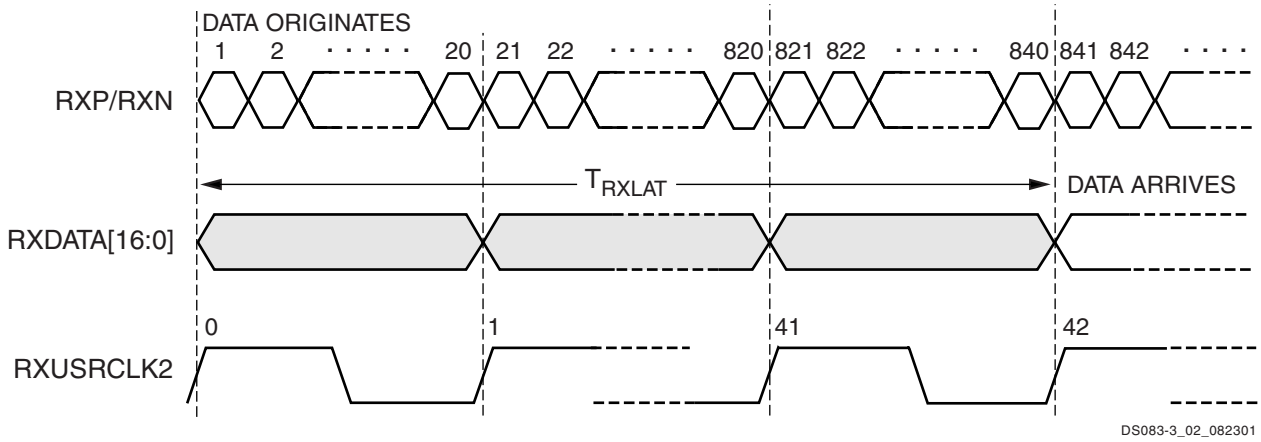

Figure 4: **RocketIO Receive Latency (Maximum)**

Table 26: **RocketIO X Transmitter Switching Characteristics**(1)

Description	Symbol	Conditions	BREFCLK Frequency	Min	Typ	Max	Units
Serial data rate	F_{GTX}			2.488		6.25	Gb/s
Serial data output total jitter (p-p)(3)	T_{TJ}	2.488 Gb/s			0.15	0.20	UI(2)
		3.125 Gb/s			0.14	0.19	UI
		4.25 Gb/s			0.39	0.48	UI
		6.25 Gb/s			0.42	0.54	UI
Serial data output deterministic jitter (p-p)(3)	T_{DJ}	2.488 Gb/s	155.52 MHz		0.03	0.17	UI
		3.125 Gb/s	156.25 MHz		0.03	0.17	UI
		4.25 Gb/s	212.5 MHz		0.14	0.26	UI
		6.25 Gb/s	312.5 MHz		0.17	0.35	UI
Serial data output random jitter (p-p)(3,4)	T_{RJ}	2.488 Gb/s	155.52 MHz		0.12	0.18	UI
		3.125 Gb/s	156.25 MHz		0.12	0.20	UI
		4.25 Gb/s	212.5 MHz		0.25	0.39	UI
		6.25 Gb/s	312.5 MHz		0.25	0.39	UI
TX rise time	T_{RTX}	20% – 80% @ 2.500 Gb/s			60		ps
TX fall time	T_{FTX}				60		ps
Transmit latency(5)	T_{TXLAT}				14	19	TXUSRCLK cycles
TXUSRCLK duty cycle	T_{TXDC}			45	50	55	%
TXUSRCLK2 duty cycle	T_{TX2DC}			45	50	55	%

Notes:
1. The XC2VPX70 operates at a fixed 4.25 Gb/s baud rate.
2. UI = Unit Interval
3. Total Jitter $T_{TJ} = T_{DJ} + T_{RJ}$
4. T_{RJ} specifications are *wideband* and include low-frequency jitter components (also referred to as *wander*).T_{RJ} specified is peak-to-peak, estimated at BER=10^{-12} using the Bathtub Method.
5. Transmit latency delay TXDATA to TXP/TXN. Refer to ***RocketIO X Transceiver User Guide*** for more information on calculating latency.

Table 27: **RocketIO Transmitter Switching Characteristics**

Description	Symbol	Conditions	Min	Typ	Max	Units
Serial data rate, full-speed clock	F_{GTX}	Flipchip packages	1.0		3.125(1)	Gb/s
		Wirebond packages	1.0		2.5(1)	Gb/s
Serial data rate, half-speed clock(3) (2X oversampling)		Flipchip packages	0.600		1.0	Gb/s
		Wirebond packages	0.600		1.0	Gb/s
Serial data output deterministic jitter	T_{DJ}	2.126 Gb/s – 3.125 Gb/s			0.17	UI(2)
		1.0626 Gb/s – 2.125 Gb/s			0.08	UI
		1.0 Gb/s – 1.0625 Gb/s			0.05	UI
		600 Mb/s – 999 Mb/s			0.08(4)	UI
Serial data output random jitter	T_{RJ}	2.126 Gb/s – 3.125 Gb/s			0.18	UI
		1.0626 Gb/s – 2.125 Gb/s			0.19	UI
		1.0 Gb/s – 1.0625 Gb/s			0.18	UI
		600 Mb/s – 999 Mb/s			0.18(4)	UI
TX rise time	T_{RTX}	20% – 80%		120		ps
TX fall time	T_{FTX}			120		ps
Transmit latency(5)	T_{TXLAT}	Including CRC		14	17	TXUSR CLK cycles
		Excluding CRC		8	11	
TXUSRCLK duty cycle	T_{TXDC}		45	50	55	%
TXUSRCLK2 duty cycle	T_{TX2DC}		45	50	55	%

Notes:
1. Serial data rate in the -5 speed grade is limited to 2.0 Gb/s in both wirebond and flipchip packages.
2. UI = Unit Interval
3. For serial rates under 1 Gb/s, the 3X (or greater) oversampling techniques described in **XAPP572** are required to meet the transmit jitter and receive jitter tolerance specifications defined in this data sheet.
4. The oversampling techniques described in **XAPP572** are required to meet these specifications for serial rates less than 1 Gb/s.
5. Transmit latency delay TXDATA to TXP/TXN. Refer to ***RocketIO Transceiver User Guide*** for more information on calculating latency.

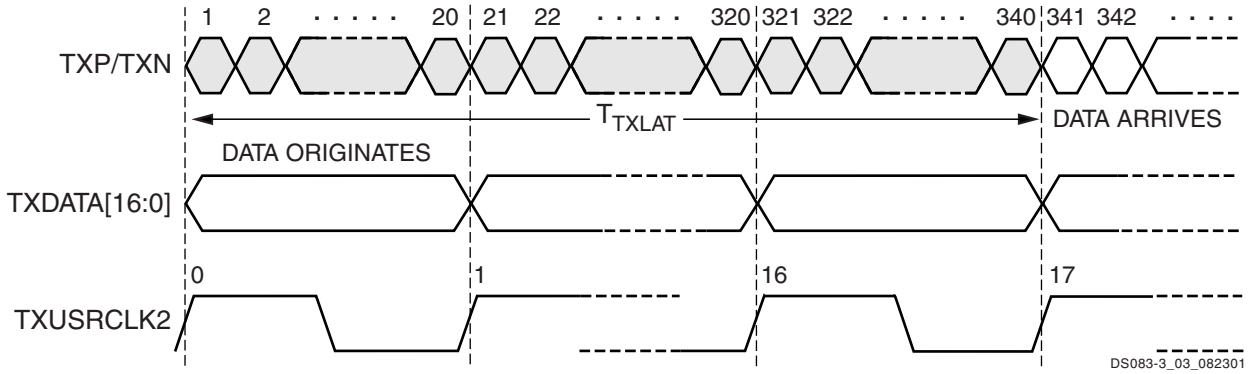

Figure 5: **RocketIO Transmit Latency (Maximum, Including CRC)**

Table 28: **RocketIO X Fabric Interface Characteristics**

Description	Symbol	All Speed Grades			Units
		Min	Typ	Max	
TX/RXUSRCLK frequency	$F_{TXRXUCLK}$	125.00		212.50	MHz
TX/RXUSRCLK2 frequency	$F_{TXRXUCLK2}$	62.50		250.00	MHz

Table 29: **RocketIO X RXUSRCLK Switching Characteristics**

Description	Symbol	Speed Grade			Units
		-7	-6	-5	
Setup and Hold Relative to Clock (RXUSRCLK)					
CHBONDI control inputs	$T_{GCCK_}$CHBI/$T_{GCKC_}$CHBI				ns, min
Clock to Out					
CHBONDO control outputs	$T_{GCKCO_}$CHBO				ns, max
Clock					
RXUSRCLK minimum pulse width, High	$T_{GPWH_}$RX				ns, min
RXUSRCLK minimum pulse width, Low	$T_{GPWL_}$RX				ns, min

Table 30: **RocketIO RXUSRCLK Switching Characteristics**

Description	Symbol	Speed Grade			Units
		-7	-6	-5	
Setup and Hold Relative to Clock (RXUSRCLK)					
CHBONDI control inputs	$T_{GCCK_}$CHBI/$T_{GCKC_}$CHBI	0.00/ 0.12	0.00/ 0.12	0.00/ 0.14	ns, min
Clock to Out					
CHBONDO control outputs	$T_{GCKCO_}$CHBO	0.50	0.50	0.55	ns, max
Clock					
RXUSRCLK minimum pulse width, High	$T_{GPWH_}$RX	2.83	2.83	4.50	ns, min
RXUSRCLK minimum pulse width, Low	$T_{GPWL_}$RX	2.83	2.83	4.50	ns, min

Table 31: **RocketIO X RXUSRCLK2 Switching Characteristics**

Description	Symbol	Speed Grade			Units
		-7	-6	-5	
Setup and Hold Relative to Clock (RXUSRCLK2)					
RXRESET control input	$T_{GCCK_}$RRST/$T_{GCKC_}$RRST				ns, min
RXPOLARITY control input	$T_{GCCK_}$RPOL/$T_{GCKC_}$RPOL				ns, min
ENCHANSYNC control input	$T_{GCCK_}$ECSY/$T_{GCKC_}$ECSY				ns, min
RXBLOCKSYNC64B66EUSE control input	$T_{GCCK_}$BLKSNC/$T_{GCKC_}$BLKSNC				ns, min
RXCOMMADETUSE control input	$T_{GCCK_}$CMDT/$T_{GCCK_}$CMDT				ns, min
RXIGNOREBTF control input	$T_{GCCK_}$IBTF/$T_{GCCK_}$IBTF				ns, min
RXDATAWIDTH control input	$T_{GCCK_}$RDATW/$T_{GCCK_}$RDATW				ns, min

Table 31: **RocketIO X RXUSRCLK2 Switching Characteristics *(Continued)***

		Speed Grade			
Description	**Symbol**	**-7**	**-6**	**-5**	**Units**
RXDEC64B66BUSE RXDEC8B10BUSE control input	$T_{GCCK_}RDEC/T_{GCCK_}RDEC$				ns, min
RXDESCRAM64B66BUSE control input	$T_{GCCK_}RDES/T_{GCCK_}RDES$				ns, min
RXINTDATAWIDTH control input	$T_{GCCK_}RIDATW/T_{GCCK_}RIDATW$				ns, min
RXSLIDE control input	$T_{GCCK_}RXSLIDE/T_{GCCK_}RXSLIDE$				ns, min
Clock to Out					
PMARXLOCK status output	$T_{GCKST_}PLCK$				ns, max
RXNOTINTABLE status outputs	$T_{GCKST_}RNIT$				ns, max
RXDISPERR status outputs	$T_{GCKST_}RDERR$				ns, max
RXCHARISCOMMA status outputs	$T_{GCKST_}RCMCH$				ns, max
RXREALIGN status output	$T_{GCKST_}ALIGN$				ns, max
RXCOMMADET status output	$T_{GCKST_}CMDT$				ns, max
RXLOSSOFSYNC status outputs	$T_{GCKST_}RLOS$				ns, max
RXCLKCORCNT status outputs	$T_{GCKST_}RCCCNT$				ns, max
RXBUFSTATUS status outputs	$T_{GCKST_}RBSTA$				ns, max
CHBONDDONE status output	$T_{GCKST_}CHBD$				ns, max
RXCHARISK status outputs	$T_{GCKST_}RKCH$				ns, max
RXRUNDISP status outputs	$T_{GCKST_}RRDIS$				ns, max
RXDATA data outputs	$T_{GCKDO_}RDAT$				ns, max
Clock					
RXUSRCLK2 minimum pulse width, High	T_{RX2PWH}				ns, min
RXUSRCLK2 minimum pulse width, Low	T_{RX2PWL}				ns, min

Table 32: **RocketIO RXUSRCLK2 Switching Characteristics**

		Speed Grade			
Description	**Symbol**	**-7**	**-6**	**-5**	**Units**
Setup and Hold Relative to Clock (RXUSRCLK2)					
RXRESET control input	$T_{GCCK_}RRST/T_{GCKC_}RRST$	0.02/ 0.00	0.02/ 0.00	0.02/ 0.00	ns, min
RXPOLARITY control input	$T_{GCCK_}RPOL/T_{GCKC_}RPOL$	0.02/ 0.00	0.02/ 0.00	0.02/ 0.00	ns, min
ENCHANSYNC control input	$T_{GCCK_}ECSY/T_{GCKC_}ECSY$	0.02/ 0.00	0.02/ 0.00	0.02/ 0.00	ns, min
Clock to Out					
RXNOTINTABLE status outputs	$T_{GCKST_}RNIT$	0.50	0.50	0.55	ns, max
RXDISPERR status outputs	$T_{GCKST_}RDERR$	0.50	0.50	0.55	ns, max
RXCHARISCOMMA status outputs	$T_{GCKST_}RCMCH$	0.50	0.50	0.55	ns, max
RXREALIGN status output	$T_{GCKST_}ALIGN$	0.41	0.41	0.46	ns, max
RXCOMMADET status output	$T_{GCKST_}CMDT$	0.41	0.41	0.46	ns, max
RXLOSSOFSYNC status outputs	$T_{GCKST_}RLOS$	0.50	0.50	0.55	ns, max
RXCLKCORCNT status outputs	$T_{GCKST_}RCCCNT$	0.41	0.41	0.46	ns, max

Table 32: **RocketIO RXUSRCLK2 Switching Characteristics *(Continued)***

		Speed Grade			
Description	**Symbol**	**-7**	**-6**	**-5**	**Units**
RXBUFSTATUS status outputs	$T_{GCKST_}$RBSTA	0.45	0.45	0.50	ns, max
RXCHECKINGCRC status output	$T_{GCKST_}$RCCRC	0.36	0.40	0.44	ns, max
RXCRCERR status output	$T_{GCKST_}$RCRCE	0.36	0.40	0.44	ns, max
CHBONDDONE status output	$T_{GCKST_}$CHBD	0.50	0.50	0.55	ns, max
RXCHARISK status outputs	$T_{GCKST_}$RKCH	0.50	0.50	0.55	ns, max
RXRUNDISP status outputs	$T_{GCKST_}$RRDIS	0.50	0.50	0.55	ns, max
RXDATA data outputs	$T_{GCKDO_}$RDAT	0.50	0.50	0.55	ns, max
Clock					
RXUSRCLK2 minimum pulse width, High	$T_{GPWH_}$RX2	1.42	1.42	2.25	ns, min
RXUSRCLK2 minimum pulse width, Low	$T_{GPWL_}$RX2	1.42	1.42	2.25	ns, min

Table 33: **RocketIO X TXUSRCLK2 Switching Characteristics**

		Speed Grade			
Description	**Symbol**	**-7**	**-6**	**-5**	**Units**
Setup and Hold Relative to Clock (TXUSRCLK2)					
TXBYPASS8B10B control inputs	$T_{GCCK_}$TBYP/$T_{GCKC_}$TBYP				ns, min
TXPOLARITY control input	$T_{GCCK_}$TPOL/$T_{GCKC_}$TPOL				ns, min
TXINHIBIT control inputs	$T_{GCCK_}$TINH/$T_{GCKC_}$TINH				ns, min
LOOPBACK control inputs	$T_{GCCK_}$LBK/$T_{GCKC_}$LBK				ns, min
TXRESET control input	$T_{GCCK_}$TRST/$T_{GCKC_}$TRST				ns, min
TXCHARISK control inputs	$T_{GCCK_}$TKCH/$T_{GCKC_}$TKCH				ns, min
TXCHARDISPMODE control inputs	$T_{GCCK_}$TCDM/$T_{GCKC_}$TCDM				ns, min
TXCHARDISPVAL control inputs	$T_{GCCK_}$TCDV/$T_{GCKC_}$TCDV				ns, min
TXDATAWIDTH control inputs	$T_{GCCK_}$TDATW/$T_{GCCK_}$TDATW				ns, min
TXENC64B66BUSE TXENC8B10BUSE control inputs	$T_{GCCK_}$TENC/$T_{GCCK_}$TENC				ns, min
TXINTDATAWIDTH control inputs	$T_{GCCK_}$TIDATW/$T_{GCCK_}$TIDATW				ns, min
TXGEARBOX64B66BUSE control inputs	$T_{GCCK_}$TXGEAR/$T_{GCCK_}$TXGEAR				ns, min
TXSCRAM64B66BUSE control inputs	$T_{GCCK_}$TXSCBL/$T_{GCCK_}$TXSCBL				ns, min
REFCLKSEL REFCLKBSEL control inputs	$T_{GCCK_}$RFCKSL/$T_{GCCK_}$RFCKSL				ns, min
TXDATA data inputs	$T_{GDCK_}$TDAT/$T_{GCKD_}$TDAT				ns, min
Clock to Out					
TXBUFERR status output	$T_{GCKST_}$TBERR				ns, max
TXKERR status outputs	$T_{GCKST_}$TKERR				ns, max
TXRUNDISP status outputs	$T_{GCKST_}$TRDIS				ns, max
Clock					
TXUSRCLK2 minimum pulse width, High	$T_{GPWH_}$TX2				ns, min
TXUSRCLK2 minimum pulse width, Low	$T_{GPWL_}$TX2				ns, min

Table 34: **RocketIO TXUSRCLK2 Switching Characteristics**

		Speed Grade			
Description	**Symbol**	**-7**	**-6**	**-5**	**Units**
Setup and Hold Relative to Clock (TXUSRCLK2)					
CONFIGENABLE control input	$T_{GCCK_}CFGEN/T_{GCKC_}CFGEN$	0.35/ 0.10	0.35/ 0.10	0.39/ 0.11	ns, min
TXBYPASS8B10B control inputs	$T_{GCCK_}TBYP/T_{GCKC_}TBYP$	0.02/ 0.00	0.02/ 0.00	0.02/ 0.00	ns, min
TXFORCECRCERR control input	$T_{GCCK_}TCRCE/T_{GCKC_}TCRCE$	0.39/ 0.12	0.44/ 0.14	0.49/ 0.15	ns, min
TXPOLARITY control input	$T_{GCCK_}TPOL/T_{GCKC_}TPOL$	0.02/ 0.00	0.02/ 0.00	0.02/ 0.00	ns, min
TXINHIBIT control inputs	$T_{GCCK_}TINH/T_{GCKC_}TINH$	0.02/ 0.00	0.02/ 0.00	0.02/ 0.00	ns, min
LOOPBACK control inputs	$T_{GCCK_}LBK/T_{GCKC_}LBK$	0.02/ 0.00	0.02/ 0.00	0.02/ 0.00	ns, min
TXRESET control input	$T_{GCCK_}TRST/T_{GCKC_}TRST$	0.02/ 0.10	0.02/ 0.10	0.02/ 0.11	ns, min
TXCHARISK control inputs	$T_{GCCK_}TKCH/T_{GCKC_}TKCH$	0.02/ 0.00	0.02/ 0.00	0.02/ 0.00	ns, min
TXCHARDISPMODE control inputs	$T_{GCCK_}TCDM/T_{GCKC_}TCDM$	0.02/ 0.00	0.02/ 0.00	0.02/ 0.00	ns, min
TXCHARDISPVAL control inputs	$T_{GCCK_}TCDV/T_{GCKC_}TCDV$	0.02/ 0.00	0.02/ 0.00	0.02/ 0.00	ns, min
CONFIGIN data input	$T_{GDCK_}CFGIN/T_{GCKD_}CFGIN$	0.35/ 0.10	0.35/ 0.10	0.39/ 0.11	ns, min
TXDATA data inputs	$T_{GDCK_}TDAT/T_{GCKD_}TDAT$	0.02/ 0.00	0.02/ 0.00	0.02/ 0.00	ns, min
Clock to Out					
TXBUFERR status output	$T_{GCKST_}TBERR$	0.54	0.54	0.60	ns, max
TXKERR status outputs	$T_{GCKST_}TKERR$	0.41	0.41	0.46	ns, max
TXRUNDISP status outputs	$T_{GCKST_}TRDIS$	0.41	0.41	0.46	ns, max
CONFIGOUT data output	$T_{GCKDO_}CFGOUT$	0.25	0.25	0.28	ns, max
Clock					
TXUSRCLK2 minimum pulse width, High	$T_{GPWH_}TX2$	1.42	1.42	2.25	ns, min
TXUSRCLK2 minimum pulse width, Low	$T_{GPWL_}TX2$	1.42	1.42	2.25	ns, min

IOB Input Switching Characteristics

Input delays associated with the pad are specified for LVCMOS 2.5V levels. For other standards, adjust the delays with the values shown in IOB Input Switching Characteristics Standard Adjustments.

Table 35: **IOB Input Switching Characteristics**

			Speed Grade			
Description	**Symbol**	**Device**	**-7**	**-6**	**-5**	**Units**
Propagation Delays						
Pad to I output, no delay	T_{IOPI}	All	0.84	0.87	0.91	ns, max
Pad to I output, with delay	T_{IOPID}	XC2VP2	1.84	1.94	2.06	ns, max
		XC2VP4	1.84	1.94	2.06	ns, max
		XC2VP7	1.84	1.94	2.06	ns, max
		XC2VP20	2.14	2.23	2.37	ns, max
		XC2VPX20	2.14	2.23	2.37	ns, max
		XC2VP30	2.14	2.26	2.46	ns, max
		XC2VP40	2.54	2.67	2.81	ns, max
		XC2VP50	2.54	2.68	2.87	ns, max
		XC2VP70	2.54	2.72	2.91	ns, max
		XC2VPX70	2.54	2.72	2.91	ns, max
		XC2VP100	N/A	4.71	4.80	ns, max
Propagation Delays						
Pad to output IQ via transparent latch, no delay	T_{IOPLI}	All	0.86	0.89	0.93	ns, max
Pad to output IQ via transparent latch, with delay	T_{IOPLID}	XC2VP2	2.30	2.62	2.97	ns, max
		XC2VP4	2.57	2.89	3.23	ns, max
		XC2VP7	2.50	2.84	3.17	ns, max
		XC2VP20	2.65	3.04	3.42	ns, max
		XC2VPX20	2.65	3.04	3.42	ns, max
		XC2VP30	2.69	3.12	3.51	ns, max
		XC2VP40	3.30	3.63	4.03	ns, max
		XC2VP50	3.86	4.10	4.45	ns, max
		XC2VP70	4.00	4.25	4.57	ns, max
		XC2VPX70	4.00	4.25	4.57	ns, max
		XC2VP100	N/A	6.50	7.06	ns, max
Clock CLK to output IQ	T_{IOCKIQ}	All	0.60	0.60	0.67	ns, max

Table 35: **IOB Input Switching Characteristics *(Continued)***

			Speed Grade			
Description	**Symbol**	**Device**	**-7**	**-6**	**-5**	**Units**
Setup and Hold Times With Respect to Clock at IOB Input Register						
Pad, no delay	T_{IOPICK}/T_{IOICKP}	All	0.84/–0.61	0.86/–0.63	0.90/–0.67	ns, min
Pad, with delay	$T_{IOPICKD}/T_{IOICKPD}$	XC2VP2	2.28/–1.89	2.60/–2.15	2.95/–2.43	ns, max
		XC2VP4	2.55/–2.10	2.87/–2.36	3.21/–2.65	ns, max
		XC2VP7	2.48/–2.05	2.82/–2.32	3.15/–2.60	ns, max
		XC2VP20	2.63/–2.05	3.02/–2.35	3.40/–2.66	ns, max
		XC2VPX20	2.63/–2.05	3.02/–2.35	3.40/–2.66	ns, max
		XC2VP30	2.67/–2.07	3.09/–2.42	3.49/–2.73	ns, max
		XC2VP40	3.28/–2.56	3.61/–2.83	4.01/–3.15	ns, max
		XC2VP50	3.84/–3.02	4.08/–3.21	4.42/–3.48	ns, max
		XC2VP70	3.98/–3.13	4.23/–3.33	4.55/–3.58	ns, max
		XC2VPX70	3.98/–3.13	4.23/–3.33	4.55/–3.58	ns, max
		XC2VP100	N/A	6.48/–5.13	7.04/–5.57	ns, max
ICE input	$T_{IOICECK}/T_{IOCKICE}$	All	0.39/ 0.01	0.44/ 0.01	0.49/ 0.01	ns, min
SR input (IFF, synchronous)	$T_{IOSRCKI}$	All	0.52	0.57	0.75	ns, min
Set/Reset Delays						
SR input to IQ (asynchronous)	T_{IOSRIQ}	All	1.13	1.27	1.42	ns, max
GSR to output IQ	T_{GSRQ}	All	5.87	6.75	7.43	ns, max

Notes:
1. Input timing for LVCMOS25 is measured at 1.25V. For other I/O standards, see Table 39.

IOB Input Switching Characteristics Standard Adjustments

Table 36 gives all standard-specific data input delay adjustments.

Table 36: **IOB Input Switching Characteristics Standard Adjustments**

Description	IOSTANDARD Attribute	Timing Parameter	Speed Grade			Units
			-7	-6	-5	
LVTTL (Low-Voltage Transistor-Transistor Logic)	LVTTL	T_{ILVTTL}	0.07	0.08	0.09	ns
LVCMOS (Low-Voltage CMOS), 3.3V	LVCMOS33	$T_{ILVCMOS33}$	0.04	0.05	0.05	ns
LVCMOS, 2.5V	LVCMOS25	$T_{ILVCMOS25}$	0.00	0.00	0.00	ns
LVCMOS, 1.8V	LVCMOS18	$T_{ILVCMOS18}$	0.29	0.33	0.36	ns
LVCMOS, 1.5V	LVCMOS15	$T_{ILVCMOS15}$	0.36	0.41	0.45	ns
LVDS (Low-Voltage Differential Signaling), 2.5V	LVDS_25	T_{ILVDS_25}	0.31	0.36	0.40	ns
LVDSEXT (LVDS Extended Mode), 2.5V	LVDSEXT_25	$T_{ILVDSEXT_25}$	0.33	0.37	0.41	ns
ULVDS (Ultra LVDS), 2.5V	ULVDS_25	T_{IULVDS_25}	0.31	0.36	0.40	ns
BLVDS (Bus LVDS), 2.5V	BLVDS_25	T_{IBLVDS_25}	0.00	0.00	0.00	ns
LDT (HyperTransport), 2.5V	LDT_25	T_{ILDT_25}	0.31	0.36	0.40	ns
LVPECL (Low-Voltage Positive Emitter-Coupled Logic), 2.5V	LVPECL_25	$T_{ILVPECL_25}$	0.69	0.80	0.88	ns
PCI (Peripheral Component Interface), 33 MHz, 3.3V	PCI33_3	T_{IPCI33_3}	0.14	0.16	0.18	ns
PCI, 66 MHz, 3.3V	PCI66_3	T_{IPCI66_3}	0.15	0.17	0.19	ns
PCI-X, 133 MHz, 3.3V	PCIX	T_{IPCIX}	0.12	0.13	0.15	ns
GTL (Gunning Transceiver Logic)	GTL	T_{IGTL}	0.59	0.68	0.74	ns
GTL Plus	GTLP	T_{IGTLP}	0.63	0.72	0.79	ns
HSTL (High-Speed Transceiver Logic), Class I	HSTL_I	T_{IHSTL_I}	0.59	0.68	0.75	ns
HSTL, Class II	HSTL_II	T_{IHSTL_II}	0.59	0.68	0.75	ns
HSTL, Class III	HSTL_III	T_{IHSTL_III}	0.57	0.66	0.72	ns
HSTL, Class IV	HSTL_IV	T_{IHSTL_IV}	0.58	0.67	0.74	ns
HSTL, Class I, 1.8V	HSTL_I_18	$T_{IHSTL_I_18}$	0.57	0.65	0.72	ns
HSTL, Class II, 1.8V	HSTL_II_18	$T_{IHSTL_II_18}$	0.55	0.63	0.69	ns
HSTL, Class III, 1.8V	HSTL_III_18	$T_{IHSTL_III_18}$	0.56	0.64	0.70	ns
HSTL, Class IV, 1.8V	HSTL_IV_18	$T_{IHSTL_IV_18}$	0.57	0.65	0.71	ns
SSTL (Stub Series Terminated Logic), Class I, 1.8V	SSTL18_I	$T_{ISSTL18_I}$	0.62	0.72	0.79	ns
SSTL, Class II, 1.8V	SSTL18_II	$T_{ISSTL18_II}$	0.64	0.73	0.81	ns
SSTL, Class I, 2.5V	SSTL2_I	T_{ISSTL2_I}	0.62	0.72	0.79	ns
SSTL, Class II, 2.5V	SSTL2_II	T_{ISSTL2_II}	0.64	0.73	0.81	ns
LVDCI (Low-Voltage Digitally Controlled Impedance), 3.3V	LVDCI_33	T_{ILVDCI_33}	–0.05	–0.05	–0.06	ns
LVDCI, 2.5V	LVDCI_25	T_{ILVDCI_25}	0.00	0.00	0.00	ns
LVDCI, 1.8V	LVDCI_18	T_{ILVDCI_18}	0.07	0.09	0.09	ns
LVDCI, 1.5V	LVDCI_15	T_{ILVDCI_15}	0.13	0.15	0.17	ns
LVDCI, 2.5V, Half-Impedance	LVDCI_DV2_25	$T_{ILVDCI_DV2_25}$	0.00	0.00	0.00	ns
LVDCI, 1.8V, Half-Impedance	LVDCI_DV2_18	$T_{ILVDCI_DV2_18}$	0.07	0.09	0.09	ns
LVDCI, 1.5V, Half-Impedance	LVDCI_DV2_15	$T_{ILVDCI_DV2_15}$	0.13	0.15	0.17	ns
HSLVDCI (High-Speed Low-Voltage DCI), 1.5V	HSLVDCI_15	$T_{IHSLVDCI_15}$	0.59	0.68	0.75	ns

Table 36: **IOB Input Switching Characteristics Standard Adjustments *(Continued)***

Description	IOSTANDARD Attribute	Timing Parameter	Speed Grade			Units
			-7	-6	-5	
HSLVDCI, 1.8V	HSLVDCI_18	$T_{IHSLVDCI_18}$	0.59	0.68	0.75	ns
HSLVDCI, 2.5V	HSLVDCI_25	$T_{IHSLVDCI_25}$	0.59	0.68	0.75	ns
HSLVDCI, 3.3V	HSLVDCI_33	$T_{IHSLVDCI_33}$	0.59	0.68	0.75	ns
GTL (Gunning Transceiver Logic) with DCI	GTL_DCI	T_{IGTL_DCI}	0.49	0.57	0.62	ns
GTL Plus with DCI	GTLP_DCI	T_{IGTLP_DCI}	0.27	0.31	0.35	ns
HSTL (High-Speed Transceiver Logic), Class I, with DCI	HSTL_I_DCI	$T_{IHSTL_I_DCI}$	0.27	0.31	0.35	ns
HSTL, Class II, with DCI	HSTL_II_DCI	$T_{IHSTL_II_DCI}$	0.27	0.31	0.35	ns
HSTL, Class III, with DCI	HSTL_III_DCI	$T_{IHSTL_III_DCI}$	0.27	0.31	0.35	ns
HSTL, Class IV, with DCI	HSTL_IV_DCI	$T_{IHSTL_IV_DCI}$	0.27	0.31	0.35	ns
HSTL, Class I, 1.8V, with DCI	HSTL_I_DCI_18	$T_{IHSTL_I_DCI_18}$	0.27	0.31	0.35	ns
HSTL, Class II, 1.8V, with DCI	HSTL_II_DCI_18	$T_{IHSTL_II_DCI_18}$	0.27	0.31	0.35	ns
HSTL, Class III, 1.8V, with DCI	HSTL_III_DCI_18	$T_{IHSTL_III_DCI_18}$	0.27	0.31	0.35	ns
HSTL, Class IV, 1.8V, with DCI	HSTL_IV_DCI_18	$T_{IHSTL_IV_DCI_18}$	0.27	0.31	0.35	ns
SSTL (Stub Series Terminated Logic), Class I, 1.8V, with DCI	SSTL18_I_DCI	$T_{ISSTL18_I_DCI}$	0.62	0.72	0.79	ns
SSTL, Class II, 1.8V, with DCI	SSTL18_II_DCI	$T_{ISSTL18_II_DCI}$	0.64	0.73	0.81	ns
SSTL, Class I, 2.5V, with DCI	SSTL2_I_DCI	$T_{ISSTL2_I_DCI}$	0.17	0.20	0.22	ns
SSTL, Class II, 2.5V, with DCI	SSTL2_II_DCI	$T_{ISSTL2_II_DCI}$	0.17	0.20	0.22	ns
LVDS, 2.5V, with DCI	LVDS_25_DCI	$T_{ILVDS_25_DCI}$	0.31	0.36	0.40	ns
LVDSEXT, 2.5V, with DCI	LVDSEXT_25_DCI	$T_{ILVDSEXT_25_DCI}$	0.33	0.37	0.41	ns
LVDS, 2.5V, with Differential Termination (DT)	LVDS_25_DT	$T_{ILVDS_25_DT}$	0.31	0.36	0.40	ns
LVDSEXT, 2.5V, with DT	LVDSEXT_25_DT	$T_{ILVDSEXT_25_DT}$	0.33	0.37	0.41	ns
ULVDS, 2.5V, with DT	ULVDS_25_DT	$T_{IULVDS_25_DT}$	0.31	0.36	0.40	ns
LDT, 2.5V, with DT	LDT_25_DT	$T_{ILDT_25_DT}$	0.31	0.36	0.40	ns

IOB Output Switching Characteristics

Output delays terminating at a pad are specified for LVCMOS25 with 12 mA drive and fast slew rate. For other standards, adjust the delays with the values shown in IOB Output Switching Characteristics Standard Adjustments.

Table 37: **IOB Output Switching Characteristics**

		Speed Grade			
Description	**Symbol**	**-7**	**-6**	**-5**	**Units**
Propagation Delays					
O input to Pad	T_{IOOP}	1.58	1.68	1.85	ns, max
O input to Pad via transparent latch	T_{IOOLP}	1.65	1.82	1.99	ns, max
3-State Delays					
T input to Pad high-impedance(2)	T_{IOTHZ}	1.23	1.35	1.51	ns, max
T input to valid data on Pad	T_{IOTP}	1.51	1.63	1.78	ns, max
T input to Pad high-impedance via transparent latch(2)	$T_{IOTLPHZ}$	1.08	1.22	1.36	ns, max
T input to valid data on Pad via transparent latch	$T_{IOTLPON}$	1.56	1.69	1.85	ns, max
GTS to Pad high-impedance(2)	T_{GTS}	4.11	4.73	5.20	ns, max
Sequential Delays					
Clock CLK to Pad	T_{IOCKP}	1.59	1.76	1.93	ns, max
Clock CLK to Pad high-impedance (synchronous)(2)	T_{IOCKHZ}	1.39	1.55	1.73	ns, max
Clock CLK to valid data on Pad (synchronous)	T_{IOCKON}	1.67	1.82	2.00	ns, max
Setup and Hold Times Before/After Clock CLK					
O input	T_{IOOCK}/T_{IOCKO}	0.23/ 0.12	0.26/ 0.14	0.29/ 0.15	ns, min
OCE input	$T_{IOOCECK}/T_{IOCKOCE}$	0.39/ 0.01	0.44/ 0.01	0.49/ 0.01	ns, min
SR input (OFF)	$T_{IOSRCKO}/T_{IOCKOSR}$	0.52/ 0.00	0.57/ 0.00	0.75/ 0.00	ns, min
3–State Setup Times, T input	T_{IOTCK}/T_{IOCKT}	0.23/ 0.12	0.26/ 0.14	0.29/ 0.15	ns, min
3-State Setup Times, TCE input	$T_{IOTCECK}/T_{IOCKTCE}$	0.39/ 0.01	0.44/ 0.01	0.49/ 0.01	ns, min
3-State Setup Times, SR input (TFF)	$T_{IOSRCKT}/T_{IOCKTSR}$	0.52/ 0.00	0.57/ 0.00	0.75/ 0.00	ns, min
Set/Reset Delays					
Minimum Pulse Width, SR inputs (asynchronous)	T_{RPW}	0.37	0.40	0.45	ns, min
SR input to Pad (asynchronous)	T_{IOSRP}	2.33	2.56	2.83	ns, max
SR input to Pad high-impedance (asynchronous)(2)	T_{IOSRHZ}	1.97	2.16	2.41	ns, max
SR input to valid data on Pad (asynchronous)	T_{IOSRON}	2.24	2.44	2.69	ns, max
GSR to Pad	T_{IOGSRQ}	5.87	6.75	7.43	ns, max

Notes:
1. A Zero “0” Hold Time listing indicates no hold time or a negative hold time. Negative values can not be guaranteed “best-case”, but if a “0” is listed, there is no positive hold time.
2. The 3-state turn-off delays should not be adjusted.

IOB Output Switching Characteristics Standard Adjustments

Table 38 gives all standard-specific adjustments for output delays terminating at pads, based on standard capacitive load, C_{REF}. Output delays terminating at a pad are specified for LVCMOS25 with 12 mA drive and fast slew rate. For other standards, adjust the delays by the values shown.

Table 38: **IOB Output Switching Characteristics Standard Adjustments**

Description	IOSTANDARD Attribute	Timing Parameter	Speed Grade			Units
			-7	-6	-5	
LVTTL (Low-Voltage Transistor-Transistor Logic), Slow, 2 mA	LVTTL_S2	T_{OLVTTL_S2}	5.42	6.24	6.86	ns
LVTTL, Slow, 4 mA	LVTTL_S4	T_{OLVTTL_S4}	3.09	3.55	3.91	ns
LVTTL, Slow, 6 mA	LVTTL_S6	T_{OLVTTL_S6}	2.26	2.60	2.86	ns
LVTTL, Slow, 8 mA	LVTTL_S8	T_{OLVTTL_S8}	1.47	1.69	1.86	ns
LVTTL, Slow, 12 mA	LVTTL_S12	T_{OLVTTL_S12}	1.02	1.18	1.29	ns
LVTTL, Slow, 16 mA	LVTTL_S16	T_{OLVTTL_S16}	0.46	0.53	0.58	ns
LVTTL, Slow, 24 mA	LVTTL_S24	T_{OLVTTL_S24}	0.37	0.42	0.47	ns
LVTTL, Fast, 2 mA	LVTTL_F2	T_{OLVTTL_F2}	4.42	5.09	5.59	ns
LVTTL, Fast, 4 mA	LVTTL_F4	T_{OLVTTL_F4}	1.95	2.24	2.46	ns
LVTTL, Fast, 6 mA	LVTTL_F6	T_{OLVTTL_F6}	1.10	1.26	1.39	ns
LVTTL, Fast, 8 mA	LVTTL_F8	T_{OLVTTL_F8}	0.40	0.46	0.51	ns
LVTTL, Fast, 12 mA	LVTTL_F12	T_{OLVTTL_F12}	0.24	0.27	0.30	ns
LVTTL, Fast, 16 mA	LVTTL_F16	T_{OLVTTL_F16}	0.05	0.06	0.07	ns
LVTTL, Fast, 24 mA	LVTTL_F24	T_{OLVTTL_F24}	–0.01	–0.01	–0.01	ns
LVCMOS (Low-Voltage CMOS), 3.3V, Slow, 2 mA	LVCMOS33_S2	$T_{OLVCMOS33_S2}$	5.42	6.23	6.86	ns
LVCMOS, 3.3V, Slow, 4 mA	LVCMOS33_S4	$T_{OLVCMOS33_S4}$	3.14	3.61	3.97	ns
LVCMOS, 3.3V, Slow, 6 mA	LVCMOS33_S6	$T_{OLVCMOS33_S6}$	2.26	2.60	2.86	ns
LVCMOS, 3.3V, Slow, 8 mA	LVCMOS33_S8	$T_{OLVCMOS33_S8}$	1.47	1.69	1.86	ns
LVCMOS, 3.3V, Slow, 12 mA	LVCMOS33_S12	$T_{OLVCMOS33_S12}$	1.03	1.18	1.30	ns
LVCMOS, 3.3V, Slow, 16 mA	LVCMOS33_S16	$T_{OLVCMOS33_S16}$	0.45	0.52	0.57	ns
LVCMOS, 3.3V, Slow, 24 mA	LVCMOS33_S24	$T_{OLVCMOS33_S24}$	0.39	0.44	0.49	ns
LVCMOS, 3.3V, Fast, 2 mA	LVCMOS33_F2	$T_{OLVCMOS33_F2}$	4.46	5.13	5.64	ns
LVCMOS, 3.3V, Fast, 4 mA	LVCMOS33_F4	$T_{OLVCMOS33_F4}$	1.96	2.25	2.48	ns
LVCMOS, 3.3V, Fast, 6 mA	LVCMOS33_F6	$T_{OLVCMOS33_F6}$	1.11	1.28	1.40	ns
LVCMOS, 3.3V, Fast, 8 mA	LVCMOS33_F8	$T_{OLVCMOS33_F8}$	0.41	0.47	0.52	ns
LVCMOS, 3.3V, Fast, 12 mA	LVCMOS33_F12	$T_{OLVCMOS33_F12}$	0.23	0.26	0.28	ns
LVCMOS, 3.3V, Fast, 16 mA	LVCMOS33_F16	$T_{OLVCMOS33_F16}$	0.02	0.02	0.03	ns
LVCMOS, 3.3V, Fast, 24 mA	LVCMOS33_F24	$T_{OLVCMOS33_F24}$	–0.07	–0.08	–0.09	ns
LVCMOS, 2.5V, Slow, 2 mA	LVCMOS25_S2	$T_{OLVCMOS25_S2}$	4.12	4.74	5.21	ns
LVCMOS, 2.5V, Slow, 4 mA	LVCMOS25_S4	$T_{OLVCMOS25_S4}$	2.43	2.80	3.07	ns
LVCMOS, 2.5V, Slow, 6 mA	LVCMOS25_S6	$T_{OLVCMOS25_S6}$	1.76	2.02	2.22	ns
LVCMOS, 2.5V, Slow, 8 mA	LVCMOS25_S8	$T_{OLVCMOS25_S8}$	1.04	1.19	1.31	ns
LVCMOS, 2.5V, Slow, 12 mA	LVCMOS25_S12	$T_{OLVCMOS25_S12}$	0.76	0.87	0.96	ns
LVCMOS, 2.5V, Slow, 16 mA	LVCMOS25_S16	$T_{OLVCMOS25_S16}$	0.41	0.47	0.52	ns
LVCMOS, 2.5V, Slow, 24 mA	LVCMOS25_S24	$T_{OLVCMOS25_S24}$	0.23	0.26	0.28	ns
LVCMOS, 2.5V, Fast, 2 mA	LVCMOS25_F2	$T_{OLVCMOS25_F2}$	3.29	3.78	4.16	ns
LVCMOS, 2.5V, Fast, 4 mA	LVCMOS25_F4	$T_{OLVCMOS25_F4}$	1.31	1.50	1.65	ns

Table 38: **IOB Output Switching Characteristics Standard Adjustments *(Continued)***

Description	IOSTANDARD Attribute	Timing Parameter	Speed Grade			Units
			-7	-6	-5	
LVCMOS, 2.5V, Fast, 6 mA	LVCMOS25_F6	$T_{OLVCMOS25_F6}$	0.62	0.71	0.78	ns
LVCMOS, 2.5V, Fast, 8 mA	LVCMOS25_F8	$T_{OLVCMOS25_F8}$	0.20	0.23	0.25	ns
LVCMOS, 2.5V, Fast, 12 mA	LVCMOS25_F12	$T_{OLVCMOS25_F12}$	0.00	0.00	0.00	ns
LVCMOS, 2.5V, Fast, 16 mA	LVCMOS25_F16	$T_{OLVCMOS25_F16}$	–0.03	–0.03	–0.04	ns
LVCMOS, 2.5V, Fast, 24 mA	LVCMOS25_F24	$T_{OLVCMOS25_F24}$	–0.15	–0.15	–0.15	ns
LVCMOS, 1.8V, Slow, 2 mA	LVCMOS18_S2	$T_{OLVCMOS18_S2}$	4.20	4.83	5.31	ns
LVCMOS, 1.8V, Slow, 4 mA	LVCMOS18_S4	$T_{OLVCMOS18_S4}$	2.76	3.18	3.49	ns
LVCMOS, 1.8V, Slow, 6 mA	LVCMOS18_S6	$T_{OLVCMOS18_S6}$	1.91	2.20	2.41	ns
LVCMOS, 1.8V, Slow, 8 mA	LVCMOS18_S8	$T_{OLVCMOS18_S8}$	1.92	2.20	2.42	ns
LVCMOS, 1.8V, Slow, 12 mA	LVCMOS18_S12	$T_{OLVCMOS18_S12}$	1.58	1.81	1.99	ns
LVCMOS, 1.8V, Slow, 16 mA	LVCMOS18_S16	$T_{OLVCMOS18_S16}$	0.76	0.87	0.96	ns
LVCMOS, 1.8V, Fast, 2 mA	LVCMOS18_F2	$T_{OLVCMOS18_F2}$	2.34	2.69	2.95	ns
LVCMOS, 1.8V, Fast, 4 mA	LVCMOS18_F4	$T_{OLVCMOS18_F4}$	0.71	0.81	0.89	ns
LVCMOS, 1.8V, Fast, 6 mA	LVCMOS18_F6	$T_{OLVCMOS18_F6}$	0.50	0.57	0.63	ns
LVCMOS, 1.8V, Fast, 8 mA	LVCMOS18_F8	$T_{OLVCMOS18_F8}$	0.48	0.55	0.61	ns
LVCMOS, 1.8V, Fast, 12 mA	LVCMOS18_F12	$T_{OLVCMOS18_F12}$	0.30	0.34	0.38	ns
LVCMOS, 1.8V, Fast, 16 mA	LVCMOS18_F16	$T_{OLVCMOS18_F16}$	0.11	0.12	0.13	ns
LVCMOS, 1.5V, Slow, 2 mA	LVCMOS15_S2	$T_{OLVCMOS15_S2}$	6.19	7.12	7.83	ns
LVCMOS, 1.5V, Slow, 4 mA	LVCMOS15_S4	$T_{OLVCMOS15_S4}$	4.28	4.93	5.42	ns
LVCMOS, 1.5V, Slow, 6 mA	LVCMOS15_S6	$T_{OLVCMOS15_S6}$	2.81	3.24	3.56	ns
LVCMOS, 1.5V, Slow, 8 mA	LVCMOS15_S8	$T_{OLVCMOS15_S8}$	2.55	2.93	3.23	ns
LVCMOS, 1.5V, Slow, 12 mA	LVCMOS15_S12	$T_{OLVCMOS15_S12}$	1.31	1.51	1.66	ns
LVCMOS, 1.5V, Slow, 16 mA	LVCMOS15_S16	$T_{OLVCMOS15_S16}$	1.28	1.47	1.62	ns
LVCMOS, 1.5V, Fast, 2 mA	LVCMOS15_F2	$T_{OLVCMOS15_F2}$	2.26	2.60	2.86	ns
LVCMOS, 1.5V, Fast, 4 mA	LVCMOS15_F4	$T_{OLVCMOS15_F4}$	1.66	1.90	2.09	ns
LVCMOS, 1.5V, Fast, 6 mA	LVCMOS15_F6	$T_{OLVCMOS15_F6}$	0.65	0.75	0.82	ns
LVCMOS, 1.5V, Fast, 8 mA	LVCMOS15_F8	$T_{OLVCMOS15_F8}$	0.94	1.08	1.19	ns
LVCMOS, 1.5V, Fast, 12 mA	LVCMOS15_F12	$T_{OLVCMOS15_F12}$	0.25	0.29	0.32	ns
LVCMOS, 1.5V, Fast, 16 mA	LVCMOS15_F16	$T_{OLVCMOS15_F16}$	0.28	0.32	0.35	ns
LVDS (Low-Voltage Differential Signaling), 2.5V	LVDS_25	T_{OLVDS_25}	0.01	0.01	0.01	ns
LVDSEXT (LVDS Extended Mode), 2.5V	LVDSEXT_25	$T_{OLVDSEXT_25}$	0.13	0.15	0.16	ns
ULVDS (Ultra LVDS), 2.5V	ULVDS_25	T_{OULVDS_25}	0.13	0.14	0.16	ns
BLVDS (Bus LVDS), 2.5V	BLVDS_25	T_{OBLVDS_25}	0.00	0.00	0.00	ns
LDT (HyperTransport), 2.5V	LDT_25	T_{OLDT_25}	0.13	0.14	0.16	ns
LVPECL (Low-Voltage Positive Emitter-Coupled Logic), 2.5V	LVPECL_25	$T_{OLVPECL_25}$	0.17	0.19	0.21	ns
PCI (Peripheral Component Interface), 33 MHz, 3.3V	PCI33_3	T_{OPCI33_3}	0.83	0.93	1.01	ns
PCI, 66 MHz, 3.3V	PCI66_3	T_{OPCI66_3}	0.89	0.97	1.05	ns
PCI-X, 133 MHz, 3.3V	PCIX	T_{OPCIX}	0.92	1.02	1.10	ns
GTL (Gunning Transceiver Logic)	GTL	T_{OGTL}	0.08	0.10	0.11	ns
GTL Plus	GTLP	T_{OGTLP}	0.04	0.05	0.06	ns
HSTL (High-Speed Transceiver Logic), Class I	HSTL_I	T_{OHSTL_I}	0.56	0.64	0.70	ns

Table 38: **IOB Output Switching Characteristics Standard Adjustments *(Continued)***

Description	IOSTANDARD Attribute	Timing Parameter	Speed Grade			Units
			-7	-6	-5	
HSTL, Class II	HSTL_II	T_{OHSTL_II}	0.30	0.35	0.38	ns
HSTL, Class III	HSTL_III	T_{OHSTL_IIII}	0.31	0.35	0.39	ns
HSTL, Class IV	HSTL_IV	T_{OHSTL_IV}	0.15	0.17	0.19	ns
HSTL, Class I, 1.8V	HSTL_I_18	$T_{OHSTL_I_18}$	0.56	0.64	0.70	ns
HSTL, Class II, 1.8V	HSTL_II_18	$T_{OHSTL_II_18}$	0.30	0.35	0.38	ns
HSTL, Class III, 1.8V	HSTL_III_18	$T_{OHSTL_IIII_18}$	0.36	0.41	0.45	ns
HSTL, Class IV, 1.8V	HSTL_IV_18	$T_{OHSTL_IV_18}$	0.19	0.22	0.24	ns
SSTL (Stub Series Terminated Logic), Class I, 1.8V	SSTL18_I	$T_{OSSTL18_I}$	0.80	0.92	1.01	ns
SSTL, Class II, 1.8V	SSTL18_II	$T_{OSSTL18_II}$	0.45	0.51	0.56	ns
SSTL, Class I, 2.5V	SSTL2_I	T_{OSSTL2_I}	0.63	0.72	0.79	ns
SSTL, Class II, 2.5V	SSTL2_II	T_{OSSTL2_II}	0.22	0.25	0.27	ns
LVDCI (Low-Voltage Digitally Controlled Impedance), 3.3V	LVDCI_33	T_{OLVDCI_33}	0.72	0.83	0.91	ns
LVDCI, 2.5V	LVDCI_25	T_{OLVDCI_25}	0.56	0.64	0.71	ns
LVDCI, 1.8V	LVDCI_18	T_{OLVDCI_18}	0.65	0.75	0.82	ns
LVDCI, 1.5V	LVDCI_15	T_{OLVDCI_15}	1.00	1.15	1.26	ns
LVDCI, 2.5V, Half-Impedance	LVDCI_DV2_25	$T_{OLVDCI_DV2_25}$	0.06	0.07	0.08	ns
LVDCI, 1.8V, Half-Impedance	LVDCI_DV2_18	$T_{OLVDCI_DV2_18}$	0.30	0.34	0.38	ns
LVDCI, 1.5V, Half-Impedance	LVDCI_DV2_15	$T_{OLVDCI_DV2_15}$	0.60	0.69	0.76	ns
HSLVDCI (High-Speed Low-Voltage DCI), 1.5V	HSLVDCI_15	$T_{OHSLVDCI_15}$	1.00	1.15	1.26	ns
HSLVDCI, 1.8V	HSLVDCI_18	$T_{OHSLVDCI_18}$	0.65	0.75	0.82	ns
HSLVDCI, 2.5V	HSLVDCI_25	$T_{OHSLVDCI_25}$	0.56	0.64	0.71	ns
HSLVDCI, 3.3V	HSLVDCI_33	$T_{OHSLVDCI_33}$	0.72	0.83	0.91	ns
GTL (Gunning Transceiver Logic) with DCI	GTL_DCI	T_{OGTL_DCI}	1.21	1.39	1.53	ns
GTL Plus with DCI	GTLP_DCI	T_{OGTLP_DCI}	0.05	0.06	0.07	ns
HSTL (High-Speed Transceiver Logic), Class I, with DCI	HSTL_I_DCI	$T_{OHSTL_I_DCI}$	0.55	0.63	0.69	ns
HSTL, Class II, with DCI	HSTL_II_DCI	$T_{OHSTL_II_DCI}$	0.47	0.54	0.60	ns
HSTL, Class III, with DCI	HSTL_III_DCI	$T_{OHSTL_III_DCI}$	0.31	0.36	0.40	ns
HSTL, Class IV, with DCI	HSTL_IV_DCI	$T_{OHSTL_IV_DCI}$	1.81	2.08	2.29	ns
HSTL, Class I, 1.8V, with DCI	HSTL_I_DCI_18	$T_{OHSTL_I_DCI_18}$	0.55	0.63	0.70	ns
HSTL, Class II, 1.8V, with DCI	HSTL_II_DCI_18	$T_{OHSTL_II_DCI_18}$	0.24	0.28	0.31	ns
HSTL, Class III, 1.8V, with DCI	HSTL_III_DCI_18	$T_{OHSTL_III_DCI_18}$	0.35	0.40	0.44	ns
HSTL, Class IV, 1.8V, with DCI	HSTL_IV_DCI_18	$T_{OHSTL_IV_DCI_18}$	1.48	1.70	1.87	ns
SSTL (Stub Series Terminated Logic), Class I, 1.8V, with DCI	SSTL18_I_DCI	$T_{OSSTL18_I_DCI}$	0.54	0.62	0.68	ns
SSTL, Class II, 1.8V, with DCI	SSTL18_II_DCI	$T_{OSSTL18_II_DCI}$	0.24	0.28	0.31	ns
SSTL, Class I, 2.5V, with DCI	SSTL2_I_DCI	$T_{OSSTL2_I_DCI}$	0.48	0.56	0.61	ns
SSTL, Class II, 2.5V, with DCI	SSTL2_II_DCI	$T_{OSSTL2_II_DCI}$	0.48	0.56	0.61	ns

I/O Standard Adjustment Measurement Methodology

Input Delay Measurements

Table 39 shows the test setup parameters used for measuring Input standard adjustments (see Table 36, page 25).

Table 39: **Input Delay Measurement Methodology**

Description	IOSTANDARD Attribute	V_L (1,2)	V_H (1,2)	V_{MEAS} (1,4,5)	V_{REF} (1,3,5)
LVTTL (Low-Voltage Transistor-Transistor Logic)	LVTTL	0	3.3	1.65	–
LVCMOS (Low-Voltage CMOS), 3.3V	LVCMOS33	0	3.3	1.65	–
LVCMOS, 2.5V	LVCMOS25	0	2.5	1.25	–
LVCMOS, 1.8V	LVCMOS18	0	1.8	0.9	–
LVCMOS, 1.5V	LVCMOS15	0	1.5	0.75	–
PCI (Peripheral Component Interface), 33 MHz, 3.3V	PCI33_3	Per PCI Specification			–
PCI, 66 MHz, 3.3V	PCI66_3	Per PCI Specification			–
PCI-X, 133 MHz, 3.3V	PCIX	Per PCI-X Specification			–
GTL (Gunning Transceiver Logic)	GTL	V_{REF} – 0.2	V_{REF} + 0.2	V_{REF}	0.80
GTL Plus	GTLP	V_{REF} – 0.2	V_{REF} + 0.2	V_{REF}	1.0
HSTL (High-Speed Transceiver Logic), Class I & II	HSTL_I, HSTL_II	V_{REF} – 0.5	V_{REF} + 0.5	V_{REF}	0.75
HSTL, Class III & IV	HSTL_III, HSTL_IV	V_{REF} – 0.5	V_{REF} + 0.5	V_{REF}	0.90
HSTL, Class I & II, 1.8V	HSTL_I_18, HSTL_II_18	V_{REF} – 0.5	V_{REF} + 0.5	V_{REF}	0.90
HSTL, Class III & IV, 1.8V	HSTL_III_18, HSTL_IV_18	V_{REF} – 0.5	V_{REF} + 0.5	V_{REF}	1.08
SSTL (Stub Terminated Tnscvr Logic), Class I & II, 2.5V	SSTL2_I, SSTL2_II	V_{REF} – 0.75	V_{REF} + 0.75	V_{REF}	1.25
SSTL, Class I & II, 1.8V	SSTL18_I, SSTL18_II	V_{REF} – 0.5	V_{REF} + 0.5	V_{REF}	0.9
LVDS (Low-Voltage Differential Signaling), 2.5V	LVDS_25	1.2 – 0.125	1.2 + 0.125	1.2	
LVDSEXT (LVDS Extended Mode), 2.5V	LVDSEXT_25	1.2 – 0.125	1.2 + 0.125	1.2	
ULVDS (Ultra LVDS), 2.5V	ULVDS_25	0.6 – 0.125	0.6 + 0.125	0.6	
LDT (HyperTransport), 2.5V	LDT_25	0.6 – 0.125	0.6 + 0.125	0.6	
LVPECL (Low-Voltage Positive Emitter-Coupled Logic), 2.5V	LVPECL_25	1.15 – 0.3	1.15 + 0.3	1.15	

Notes:

1. Input delay measurement methodology parameters for LVDCI and HSLVDCI are the same as for LVCMOS standards of the same voltage. Parameters for all other DCI standards are the same as for the corresponding non-DCI standards.
2. Input waveform switches between V_L and V_H.
3. Measurements are made at typical, minimum, and maximum V_{REF} values. Reported delays reflect worst case of these measurements. V_{REF} values listed are typical. See ***Virtex-II Pro Platform FPGA User Guide*** for min/max specifications.
4. Input voltage level from which measurement starts.
5. Note that this is an input voltage reference that bears no relation to the V_{REF} / V_{MEAS} parameters found in IBIS models and/or noted in Figure 6.

Output Delay Measurements

Output delays are measured using a Tektronix P6245 TDS500/600 probe (< 1 pF) across approximately 4" of FR4 microstrip trace. Standard termination was used for all testing. (See ***Virtex-II Pro Platform FPGA User Guide*** for details.) The propagation delay of the 4" trace is characterized separately and subtracted from the final measurement, and is therefore not included in the generalized test setup shown in Figure 6.

Measurements and test conditions are reflected in the IBIS models except where the IBIS format precludes it. (IBIS models can be found on the web at **http://support.xilinx.com/support/sw_ibis.htm**.) Parameters V_{REF}, R_{REF}, C_{REF}, and V_{MEAS} fully describe the test conditions for each I/O standard. The most accurate prediction of propagation delay in any given application can be obtained through IBIS simulation, using the following method:

1. Simulate the output driver of choice into the generalized test setup, using values from Table 40.
2. Record the time to V_{MEAS}.
3. Simulate the output driver of choice into the actual PCB trace and load, using the appropriate IBIS model or capacitance value to represent the load.
4. Record the time to V_{MEAS}.
5. Compare the results of steps 2 and 4. The increase or decrease in delay should be added to or subtracted from the I/O Output Standard Adjustment value (Table 38) to yield the actual worst-case propagation delay (clock-to-input) of the PCB trace.

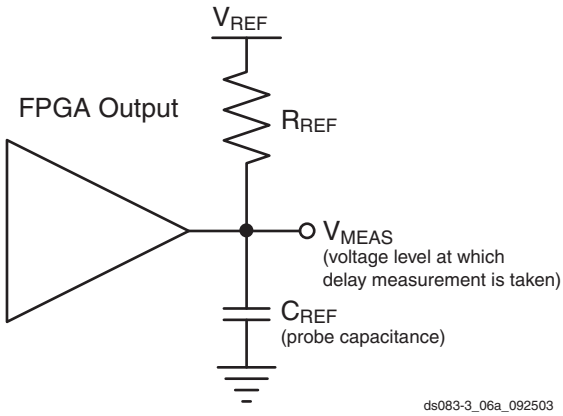

Figure 6: **Generalized Test Setup**

Table 40: **Output Delay Measurement Methodology**

Description	IOSTANDARD Attribute	R_{REF} (Ω)	C_{REF} (1) (pF)	V_{MEAS} (V)	V_{REF} (V)
LVTTL (Low-Voltage Transistor-Transistor Logic)	LVTTL (all)	1M	0	1.65	0
LVCMOS (Low-Voltage CMOS), 3.3V	LVCMOS33	1M	0	1.65	0
LVCMOS, 2.5V	LVCMOS25	1M	0	1.25	0
LVCMOS, 1.8V	LVCMOS18	1M	0	0.9	0
LVCMOS, 1.5V	LVCMOS15	1M	0	0.75	0
PCI (Peripheral Component Interface), 33 MHz, 3.3V	PCI33_3 (rising edge)	25	10 (2)	0.94	0
	PCI33_3 (falling edge)	25	10 (2)	2.03	3.3
PCI, 66 MHz, 3.3V	PCI66_3 (rising edge)	25	10 (2)	0.94	0
	PCI66_3 (falling edge)	25	10 (2)	2.03	3.3
PCI-X, 133 MHz, 3.3V	PCIX (rising edge)	25	10 (3)	0.94	0
	PCIX (falling edge	25	10 (3)	2.03	3.3
GTL (Gunning Transceiver Logic)	GTL	25	0	0.8	1.2
GTL Plus	GTLP	25	0	1.0	1.5
HSTL (High-Speed Transceiver Logic), Class I	HSTL_I	50	0	V_{REF}	0.75
HSTL, Class II	HSTL_II	25	0	V_{REF}	0.75
HSTL, Class III	HSTL_III	50	0	0.9	1.5
HSTL, Class IV	HSTL_IV	25	0	0.9	1.5
HSTL, Class I, 1.8V	HSTL_I_18	50	0	V_{REF}	0.9
HSTL, Class II, 1.8V	HSTL_II_18	25	0	V_{REF}	0.9
HSTL, Class III, 1.8V	HSTL_III_18	50	0	1.1	1.8
HSTL, Class IV, 1.8V	HSTL_IV_18	25	0	1.1	1.8

Table 40: **Output Delay Measurement Methodology**

Description	IOSTANDARD Attribute	R_{REF} (Ω)	C_{REF} (1) (pF)	V_{MEAS} (V)	V_{REF} (V)
SSTL (Stub Series Terminated Logic), Class I, 1.8V	SSTL18_I	50	0	V_{REF}	0.9
SSTL, Class II, 1.8V	SSTL18_II	25	0	V_{REF}	0.9
SSTL, Class I, 2.5V	SSTL2_I	50	0	V_{REF}	1.25
SSTL, Class II, 2.5V	SSTL2_II	25	0	V_{REF}	1.25
LVDS (Low-Voltage Differential Signaling), 2.5V	LVDS_25	50	0	V_{REF}	1.2
LVDSEXT (LVDS Extended Mode), 2.5V	LVDSEXT_25	50	0	V_{REF}	1.2
BLVDS (Bus LVDS), 2.5V	BLVDS_25	1M	0	1.2	0
LDT (HyperTransport), 2.5V	LDT_25	50	0	V_{REF}	0.6
LVPECL (Low-Voltage Positive Emitter-Coupled Logic), 2.5V	LVPECL_25	1M	0	1.23	0
LVDCI/HSLVDCI (Low-Voltage Digitally Controlled Impedance), 3.3V	LVDCI_33	1M	0	1.65	0
LVDCI/HSLVDCI, 2.5V	LVDCI_25	1M	0	1.25	0
LVDCI/HSLVDCI, 1.8V	LVDCI_18	1M	0	0.9	0
LVDCI/HSLVDCI, 1.5V	LVDCI_15	1M	0	0.75	0
HSTL (High-Speed Transceiver Logic), Class I & II, with DCI	HSTL_I_DCI, HSTL_II_DCI	50	0	V_{REF}	0.75
HSTL, Class III & IV, with DCI	HSTL_III_DCI, HSTL_IV_DCI	50	0	0.9	1.5
HSTL, Class I & II, 1.8V, with DCI	HSTL_I_DCI_18, HSTL_II_DCI_18	50	0	V_{REF}	0.9
HSTL, Class III & IV, 1.8V, with DCI	HSTL_III_DCI_18, HSTL_IV_DCI_18	50	0	1.1	1.8
SSTL (Stub Series Termi.Logic), Class I & II, 1.8V, with DCI	SSTL18_I_DCI, SSTL18_II_DCI	50	0	V_{REF}	0.9
SSTL, Class I & II, 2.5V, with DCI	SSTL2_I_DCI, SSTL2_II_DCI	50	0	V_{REF}	1.25
GTL (Gunning Transceiver Logic) with DCI	GTL_DCI	50	0	0.8	1.2
GTL Plus with DCI	GTLP_DCI	50	0	1.0	1.5

Notes:
1. C_{REF} is the capacitance of the probe, nominally 0 pF.
2. Measured as per PCI specification.
3. Measured as per PCI-X specification.

Clock Distribution Switching Characteristics

Table 41: **Clock Distribution Switching Characteristics**

Description	Symbol	Speed Grade			Units
		-7	-6	-5	
Global Clock Buffer I input to O output	T_{GIO}	0.05	0.057	0.064	ns, max
Global Clock Buffer S input Setup/Hold to I1 an I2 inputs	T_{GSI}/T_{GIS}	0.49/–0.10	0.54/–0.12	0.60/–0.13	ns, max

CLB Switching Characteristics

Delays originating at F/G inputs vary slightly according to the input used (see Figure 34 in Module 2). The values listed below are worst-case. Precise values are provided by the timing analyzer.

Table 42: **CLB Switching Characteristics**

Description	Symbol	Speed Grade			Units
		-7	-6	-5	
Combinatorial Delays					
4-input function: F/G inputs to X/Y outputs	T_{ILO}	0.28	0.32	0.36	ns, max
5-input function: F/G inputs to F5 output	T_{IF5}	0.59	0.65	0.73	ns, max
5-input function: F/G inputs to X output	T_{IF5X}	0.63	0.70	0.79	ns, max
FXINA or FXINB inputs to Y output via MUXFX	T_{IFXY}	0.29	0.32	0.36	ns, max
FXINA input to FX output via MUXFX	T_{INAFX}	0.29	0.32	0.36	ns, max
FXINB input to FX output via MUXFX	T_{INBFX}	0.29	0.32	0.36	ns, max
SOPIN input to SOPOUT output via ORCY	T_{SOPSOP}	0.11	0.13	0.14	ns, max
Incremental delay routing through transparent latch to XQ/YQ outputs	T_{IFNCTL}	0.23	0.24	0.27	ns, max
Sequential Delays					
FF Clock CLK to XQ/YQ outputs	T_{CKO}	0.37	0.38	0.42	ns, max
Latch Clock CLK to XQ/YQ outputs	T_{CKLO}	0.54	0.57	0.64	ns, max
Setup and Hold Times Before/After Clock CLK					
BX/BY inputs	T_{DICK}/T_{CKDI}	0.21/–0.04	0.24/–0.05	0.27/–0.06	ns, min
DY inputs	T_{DYCK}/T_{CKDY}	0.00/ 0.12	0.00/ 0.14	0.00/ 0.15	ns, min
DX inputs	T_{DXCK}/T_{CKDX}	0.00/ 0.12	0.00/ 0.14	0.00/ 0.15	ns, min
CE input	T_{CECK}/T_{CKCE}	0.27/ 0.01	0.34/ 0.01	0.47/ 0.01	ns, min
SR/BY inputs (synchronous)	T_{RCK}/T_{CKR}	0.55/–0.01	0.60/–0.01	0.78/–0.01	ns, min
Clock CLK					
Minimum Pulse Width, High	T_{CH}	0.37	0.40	0.45	ns, min
Minimum Pulse Width, Low	T_{CL}	0.37	0.40	0.45	ns, min
Set/Reset					
Minimum Pulse Width, SR/BY inputs (asynchronous)	T_{RPW}	0.37	0.40	0.45	ns, min
Delay from SR/BY inputs to XQ/YQ outputs (asynchronous)	T_{RQ}	1.09	1.25	1.40	ns, max
Toggle Frequency (for export control)	F_{TOG}	1350	1200	1050	MHz

Notes:
1. A Zero “0” Hold Time listing indicates no hold time or a negative hold time. Negative values can not be guaranteed “best-case”, but if a “0” is listed, there is no positive hold time.

CLB Distributed RAM Switching Characteristics

Table 43: **CLB Distributed RAM Switching Characteristics**

Description	Symbol	Speed Grade			Units
		-7	-6	-5	
Sequential Delays					
Clock CLK to X/Y outputs (WE active) in 16 x 1 mode	$T_{SHCKO16}$	1.25	1.38	1.54	ns, max
Clock CLK to X/Y outputs (WE active) in 32 x 1 mode	$T_{SHCKO32}$	1.57	1.75	1.95	ns, max
Clock CLK to F5 output	$T_{SHCKOF5}$	1.52	1.68	1.88	ns, max
Setup and Hold Times Before/After Clock CLK					
BX/BY data inputs (DIN)	T_{DS}/T_{DH}	0.38/–0.07	0.41/–0.07	0.46/–0.08	ns, min
F/G address inputs	T_{AS}/T_{AH}	0.42/ 0.00	0.47/ 0.00	0.52/ 0.00	ns, min
SR input	T_{WES}/T_{WEH}	0.22/ 0.04	0.24/ 0.05	0.26/ 0.05	ns, min
Clock CLK					
Minimum Pulse Width, High	T_{WPH}	0.63	0.72	0.79	ns, min
Minimum Pulse Width, Low	T_{WPL}	0.63	0.72	0.79	ns, min
Minimum clock period to meet address write cycle time	T_{WC}	1.25	1.44	1.58	ns, min

Notes:
1. A Zero “0” Hold Time listing indicates no hold time or a negative hold time. Negative values cannot be guaranteed “best-case”, but if a “0” is listed, there is no positive hold time.

CLB Shift Register Switching Characteristics

Table 44: **CLB Shift Register Switching Characteristics**

Description	Symbol	Speed Grade			Units
		-7	-6	-5	
Sequential Delays					
Clock CLK to X/Y outputs	T_{REG}	2.78	3.12	3.49	ns, max
Clock CLK to X/Y outputs	T_{REG32}	3.10	3.49	3.90	ns, max
Clock CLK to XB output via MC15 LUT output	T_{REGXB}	2.84	3.18	3.55	ns, max
Clock CLK to YB output via MC15 LUT output	T_{REGYB}	2.55	2.88	3.21	ns, max
Clock CLK to Shiftout	T_{CKSH}	2.50	2.83	3.15	ns, max
Clock CLK to F5 output	T_{REGF5}	3.05	3.42	3.83	ns, max
Setup and Hold Times Before/After Clock CLK					
BX/BY data inputs (DIN)	T_{SRLDS}/T_{SRLDH}	0.70/–0.16	0.77/–0.18	0.98/–0.21	ns, min
SR input	T_{WSS}/T_{WSH}	0.27/ 0.01	0.34/ 0.01	0.47/ 0.01	ns, min
Clock CLK					
Minimum Pulse Width, High	T_{SRPH}	0.63	0.72	0.79	ns, min
Minimum Pulse Width, Low	T_{SRPL}	0.63	0.72	0.79	ns, min

Notes:
1. A Zero “0” Hold Time listing indicates no hold time or a negative hold time. Negative values cannot be guaranteed “best-case”, but if a “0” is listed, there is no positive hold time.

Multiplier Switching Characteristics

Table 45: **Multiplier Switching Characteristics**

Description	Symbol	Speed Grade			Units
		-7	-6	-5	
Propagation Delay to Output Pin					
Input to Pin35	T_{MULT_P35}	4.08	4.64	5.19	ns, max
Input to Pin34	T_{MULT_P34}	3.99	4.55	5.09	ns, max
Input to Pin33	T_{MULT_P33}	3.90	4.45	4.99	ns, max
Input to Pin32	T_{MULT_P32}	3.80	4.36	4.88	ns, max
Input to Pin31	T_{MULT_P31}	3.71	4.27	4.78	ns, max
Input to Pin30	T_{MULT_P30}	3.62	4.17	4.67	ns, max
Input to Pin29	T_{MULT_P29}	3.53	4.08	4.57	ns, max
Input to Pin28	T_{MULT_P28}	3.43	3.99	4.46	ns, max
Input to Pin27	T_{MULT_P27}	3.34	3.89	4.36	ns, max
Input to Pin26	T_{MULT_P26}	3.25	3.80	4.26	ns, max
Input to Pin25	T_{MULT_P25}	3.16	3.71	4.15	ns, max
Input to Pin24	T_{MULT_P24}	3.06	3.61	4.05	ns, max
Input to Pin23	T_{MULT_P23}	2.97	3.52	3.94	ns, max
Input to Pin22	T_{MULT_P22}	2.88	3.43	3.84	ns, max
Input to Pin21	T_{MULT_P21}	2.79	3.34	3.73	ns, max
Input to Pin20	T_{MULT_P20}	2.70	3.24	3.63	ns, max
Input to Pin19	T_{MULT_P19}	2.60	3.15	3.53	ns, max
Input to Pin18	T_{MULT_P18}	2.51	3.06	3.42	ns, max
Input to Pin17	T_{MULT_P17}	2.42	2.96	3.32	ns, max
Input to Pin16	T_{MULT_P16}	2.34	2.86	3.21	ns, max
Input to Pin15	T_{MULT_P15}	2.27	2.76	3.09	ns, max
Input to Pin14	T_{MULT_P14}	2.19	2.67	2.98	ns, max
Input to Pin13	T_{MULT_P13}	2.12	2.57	2.87	ns, max
Input to Pin12	T_{MULT_P12}	2.04	2.47	2.76	ns, max
Input to Pin11	T_{MULT_P11}	1.96	2.37	2.65	ns, max
Input to Pin10	T_{MULT_P10}	1.89	2.27	2.54	ns, max
Input to Pin9	T_{MULT_P9}	1.81	2.17	2.43	ns, max
Input to Pin8	T_{MULT_P8}	1.74	2.07	2.32	ns, max
Input to Pin7	T_{MULT_P7}	1.66	1.97	2.21	ns, max
Input to Pin6	T_{MULT_P6}	1.59	1.87	2.09	ns, max
Input to Pin5	T_{MULT_P5}	1.51	1.77	1.98	ns, max
Input to Pin4	T_{MULT_P4}	1.44	1.67	1.87	ns, max
Input to Pin3	T_{MULT_P3}	1.36	1.57	1.76	ns, max
Input to Pin2	T_{MULT_P2}	1.28	1.47	1.65	ns, max
Input to Pin1	T_{MULT_P1}	1.21	1.37	1.54	ns, max
Input to Pin0	T_{MULT_P0}	1.13	1.27	1.43	ns, max

Table 46: **Pipelined Multiplier Switching Characteristics**

Description	Symbol	Speed Grade			Units
		-7	-6	-5	
Setup and Hold Times Before/After Clock					
Data Inputs	$T_{MULIDCK}/T_{MULCKID}$	1.86/ 0.00	2.06/ 0.00	2.31/ 0.00	ns, max
Clock Enable	$T_{MULIDCK_CE}/T_{MULCKID_CE}$	0.23/ 0.00	0.25/ 0.00	0.28/ 0.00	ns, max
Reset	$T_{MULIDCK_RST}/T_{MULCKID_RST}$	0.21/–0.09	0.24/–0.09	0.26/–0.10	ns, max
Clock to Output Pin					
Clock to Pin35	T_{MULTCK_P35}	2.45	2.92	3.27	ns, max
Clock to Pin34	T_{MULTCK_P34}	2.36	2.82	3.16	ns, max
Clock to Pin33	T_{MULTCK_P33}	2.28	2.72	3.05	ns, max
Clock to Pin32	T_{MULTCK_P32}	2.20	2.62	2.93	ns, max
Clock to Pin31	T_{MULTCK_P31}	2.12	2.52	2.82	ns, max
Clock to Pin30	T_{MULTCK_P30}	2.03	2.42	2.71	ns, max
Clock to Pin29	T_{MULTCK_P29}	1.95	2.32	2.60	ns, max
Clock to Pin28	T_{MULTCK_P28}	1.87	2.22	2.48	ns, max
Clock to Pin27	T_{MULTCK_P27}	1.79	2.12	2.37	ns, max
Clock to Pin26	T_{MULTCK_P26}	1.70	2.02	2.26	ns, max
Clock to Pin25	T_{MULTCK_P25}	1.62	1.92	2.15	ns, max
Clock to Pin24	T_{MULTCK_P24}	1.54	1.82	2.03	ns, max
Clock to Pin23	T_{MULTCK_P23}	1.46	1.71	1.92	ns, max
Clock to Pin22	T_{MULTCK_P22}	1.37	1.61	1.81	ns, max
Clock to Pin21	T_{MULTCK_P21}	1.29	1.51	1.69	ns, max
Clock to Pin20	T_{MULTCK_P20}	1.21	1.41	1.58	ns, max
Clock to Pin19	T_{MULTCK_P19}	1.13	1.31	1.47	ns, max
Clock to Pin18	T_{MULTCK_P18}	1.04	1.21	1.36	ns, max
Clock to Pin17	T_{MULTCK_P17}	0.96	1.11	1.24	ns, max
Clock to Pin16	T_{MULTCK_P16}	0.88	1.01	1.13	ns, max
Clock to Pin15	T_{MULTCK_P15}	0.80	0.91	1.02	ns, max
Clock to Pin14	T_{MULTCK_P14}	0.71	0.81	0.91	ns, max
Clock to Pin13	T_{MULTCK_P13}	0.63	0.71	0.79	ns, max
Clock to Pin12	T_{MULTCK_P12}	0.63	0.71	0.79	ns, max
Clock to Pin11	T_{MULTCK_P11}	0.63	0.71	0.79	ns, max
Clock to Pin10	T_{MULTCK_P10}	0.63	0.71	0.79	ns, max
Clock to Pin9	T_{MULTCK_P9}	0.63	0.71	0.79	ns, max
Clock to Pin8	T_{MULTCK_P8}	0.63	0.71	0.79	ns, max
Clock to Pin7	T_{MULTCK_P7}	0.63	0.71	0.79	ns, max
Clock to Pin6	T_{MULTCK_P6}	0.63	0.71	0.79	ns, max
Clock to Pin5	T_{MULTCK_P5}	0.63	0.71	0.79	ns, max
Clock to Pin4	T_{MULTCK_P4}	0.63	0.71	0.79	ns, max
Clock to Pin3	T_{MULTCK_P3}	0.63	0.71	0.79	ns, max
Clock to Pin2	T_{MULTCK_P2}	0.63	0.71	0.79	ns, max
Clock to Pin1	T_{MULTCK_P1}	0.63	0.71	0.79	ns, max
Clock to Pin0	T_{MULTCK_P0}	0.63	0.71	0.79	ns, max

Block SelectRAM+ Switching Characteristics

Table 47: **Block SelectRAM+ Switching Characteristics**

Description	Symbol	Speed Grade			Units
		-7	-6	-5	
Sequential Delays					
Clock CLK to DOUT output	T_{BCKO}	1.41	1.50	1.68	ns, max
Setup and Hold Times Before Clock CLK					
ADDR inputs	T_{BACK}/T_{BCKA}	0.27/ 0.22	0.31/ 0.25	0.35/ 0.28	ns, min
DIN inputs	T_{BDCK}/T_{BCKD}	0.20/ 0.22	0.23/ 0.25	0.26/ 0.28	ns, min
EN input	T_{BECK}/T_{BCKE}	0.28/ 0.00	0.32/ 0.00	0.35/ 0.00	ns, min
RST input	T_{BRCK}/T_{BCKR}	0.28/ 0.00	0.32/ 0.00	0.35/ 0.00	ns, min
WEN input	T_{BWCK}/T_{BCKW}	0.33/ 0.00	0.35/ 0.00	0.39/ 0.00	ns, min
Clock CLK					
CLKA to CLKB setup time for different ports	T_{BCCS}	1.0	1.0	1.0	ns, min
Minimum Pulse Width, High	T_{BPWH}	1.17	1.30	1.50	ns, min
Minimum Pulse Width, Low	T_{BPWL}	1.17	1.30	1.50	ns, min

Notes:
1. A Zero “0” Hold Time listing indicates no hold time or a negative hold time. Negative values can not be guaranteed “best-case”, but if a “0” is listed, there is no positive hold time.

TBUF Switching Characteristics

Table 48: **TBUF Switching Characteristics**

Description	Symbol	Speed Grade			Units
		-7	-6	-5	
Combinatorial Delays					
IN input to OUT output	T_{IO}	0.88	1.01	1.12	ns, max
TRI input to OUT output high-impedance	T_{OFF}	0.48	0.55	0.61	ns, max
TRI input to valid data on OUT output	T_{ON}	0.48	0.55	0.61	ns, max

Configuration Timing

Configuration Memory Clearing Parameters

Power-up timing of configuration signals is shown in Figure 7; corresponding timing characteristics are listed in Table 49.

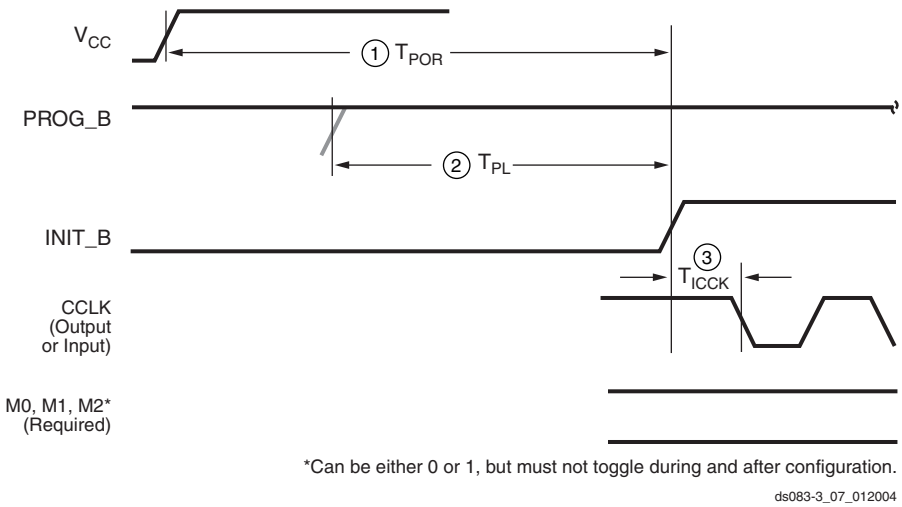

Figure 7: **Configuration Power-Up Timing**

Table 49: **Power-Up Timing Characteristics**

Description	Figure References	Symbol	Value	Units
Power-on reset	1	T_{POR}	T_{PL} + 2	ms, max
Program latency	2	T_{PL}	4	µs per frame, max
CCLK (output) delay	3	T_{ICCK}	0.25	µs, min
			4.00	µs, max
Program pulse width		$T_{PROGRAM}$	300	ns, min

Notes:
1. The M2, M1, and M0 mode pins should be set at a constant DC voltage level, either through pull-up or pull-down resistors, or tied directly to ground or V_{CCAUX}. The mode pins should not be toggled during and after configuration.

Master/Slave Serial Mode Parameters

Clock timing for Slave Serial configuration programming is shown in Figure 8, with Master Serial clock timing shown in Figure 9. Programming parameters for both Slave and Master modes are given in Table 50.

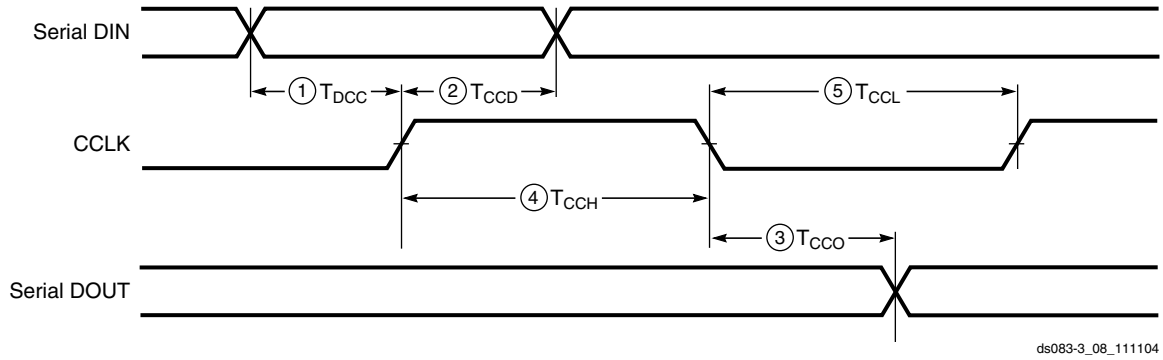

Figure 8: **Slave Serial Mode Timing Sequence**

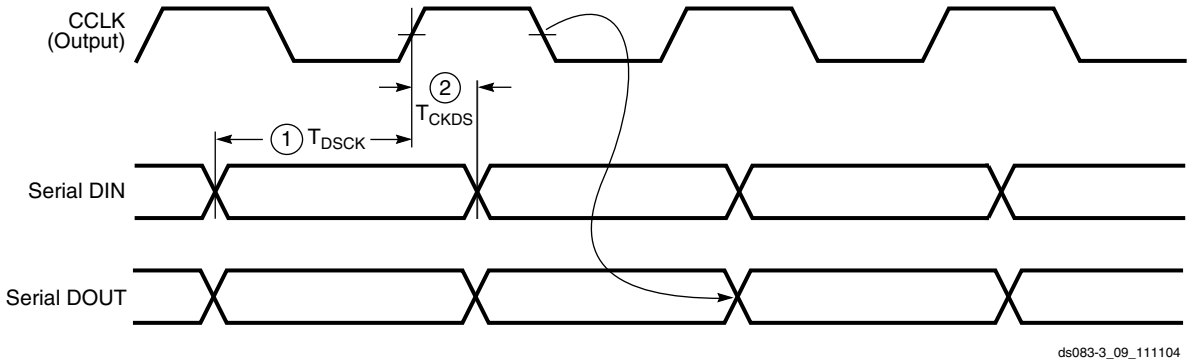

Figure 9: **Master Serial Mode Timing Sequence**

Table 50: **Master/Slave Serial Mode Timing Characteristics**

	Description	Figure References	Symbol	Value	Units
CCLK	DIN setup/hold, slave mode (Figure 8)	1/2	T_{DCC}/T_{CCD}	5.0/0.0	ns, min
	DIN setup/hold, master mode (Figure 9)	1/2	T_{DSCK}/T_{CKDS}	5.0/0.0	ns, min
	DOUT	3	T_{CCO}	12.0	ns, max
	High time	4	T_{CCH}	5.0	ns, min
	Low time	5	T_{CCL}	5.0	ns, min
	Maximum start-up frequency		$F_{CC_STARTUP}$	50	MHz, max
	Maximum frequency		F_{CC_SERIAL}	66(1)	MHz, max
	Frequency tolerance, master mode with respect to nominal			+45% –30%	

Notes:
1. If no provision is made in the design to adjust the frequency of CCLK, F_{CC_SERIAL} should not exceed $F_{CC_STARTUP}$.

Master/Slave SelectMAP Parameters

Figure 10 is a generic timing diagram for data loading using SelectMAP. For other data loading diagrams, refer to the ***Virtex-II Pro Platform FPGA User Guide***.

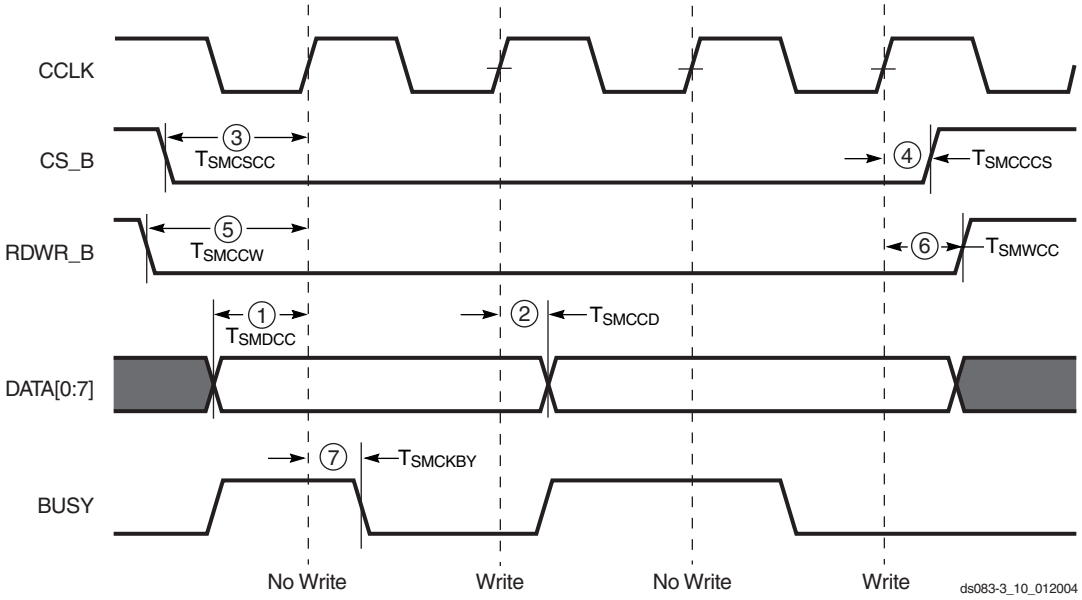

Figure 10: **SelectMAP Mode Data Loading Sequence (Generic)**

Table 51: **SelectMAP Mode Write Timing Characteristics**

	Description	Device	Figure References	Symbol	Value	Units
CCLK	DATA[0:7] setup/hold	XC2VP2	1/2	T_{SMDCC}/T_{SMCCD}	5.0/0.0	ns, min
		XC2VP4			5.0/0.0	ns, min
		XC2VP7			5.0/0.0	ns, min
		XC2VP20			5.0/0.0	ns, min
		XC2VPX20			5.0/0.0	ns, min
		XC2VP30			5.0/0.0	ns, min
		XC2VP40			5.0/0.0	ns, min
		XC2VP50			5.0/0.0	ns, min
		XC2VP70			6.0/0.0	ns, min
		XC2VPX70			6.0/0.0	ns, min
		XC2VP100			7.5/0.0	ns, min
	CS_B setup/hold		3/4	T_{SMCSCC}/T_{SMCCCS}	7.0/0.0	ns, min
	RDWR_B setup/hold		5/6	T_{SMCCW}/T_{SMWCC}	7.0/0.0	ns, min
	BUSY propagation delay		7	T_{SMCKBY}	12.0	ns, max
	Maximum start-up frequency			$F_{CC_STARTUP}$	50	MHz, max
	Maximum frequency			$F_{CC_SELECTMAP}$	50	MHz, max
	Maximum frequency with no handshake			F_{CCNH}	50	MHz, max

JTAG Test Access Port Switching Characteristics

Characterization data for some of the most commonly requested timing parameters shown in Figure 11 is listed in Table 52.

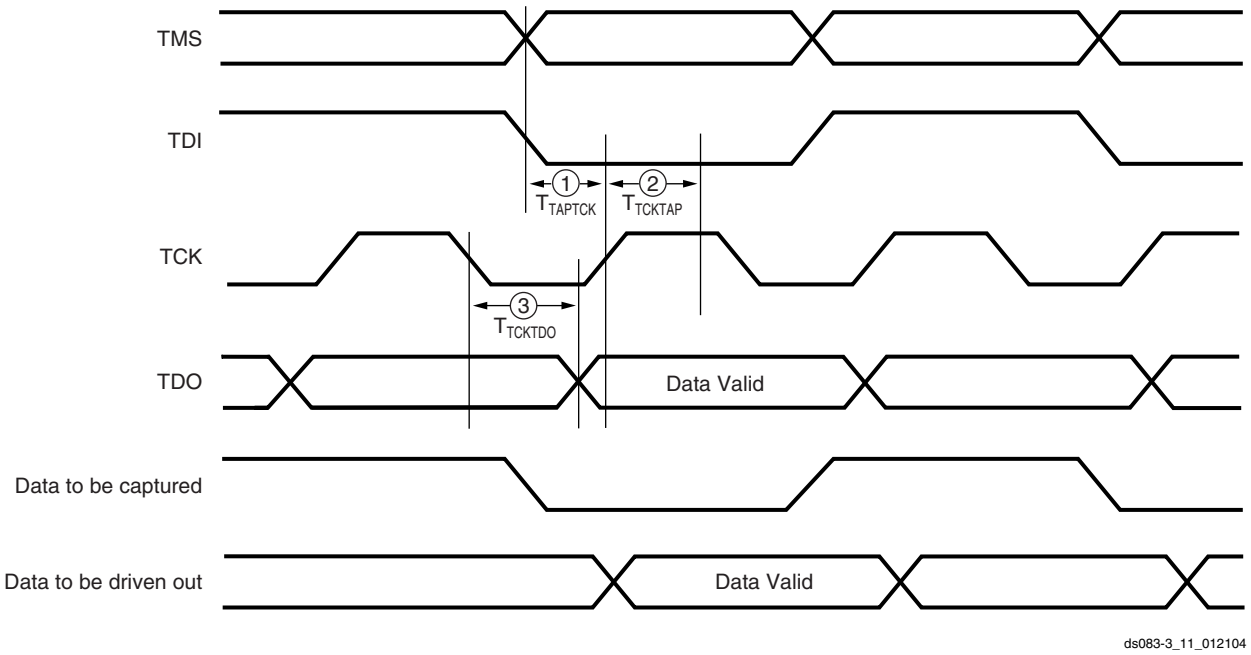

Figure 11: **Virtex-II Pro Boundary Scan Port Timing Waveforms**

Table 52: **Boundary-Scan Port Timing Specifications**

	Description	Figure References	Symbol	Value	Units
TCK	TMS and TDI setup time	1	T_{TAPTCK}	5.5	ns, min
	TMS and TDI hold times	2	T_{TCKTAP}	2.0	ns, min
	Falling edge to TDO output valid	3	T_{TCKTDO}	11.0	ns, max
	Maximum frequency		F_{TCK}	33.0	MHz, max

Virtex-II Pro Pin-to-Pin Output Parameter Guidelines

All devices are 100% functionally tested. Listed below are representative values for typical pin locations and normal clock loading. Values are expressed in nanoseconds unless otherwise noted.

Global Clock Input to Output Delay for LVCMOS25, 12 mA, Fast Slew Rate, *With* DCM

Table 53: **Global Clock Input to Output Delay for LVCMOS25, 12 mA, Fast Slew Rate, *With* DCM**

			Speed Grade			
Description	**Symbol**	**Device**	**-7**	**-6**	**-5**	**Units**
LVCMOS25 Global Clock Input to Output Delay using Output Flip-flop, 12 mA, Fast Slew Rate, *with* DCM. For data *output* with different standards, adjust the delays with the values shown in IOB Output Switching Characteristics Standard Adjustments, page 28.						
Global Clock and OFF with DCM	$T_{ICKOFDCM}$	XC2VP2	1.55	1.59	1.62	ns
		XC2VP4	1.58	1.61	1.65	ns
		XC2VP7	1.63	1.68	1.72	ns
		XC2VP20	1.68	1.74	1.79	ns
		XC2VPX20	1.68	1.74	1.79	ns
		XC2VP30	1.68	1.75	1.80	ns
		XC2VP40	1.71	1.86	1.92	ns
		XC2VP50	1.80	2.00	2.07	ns
		XC2VP70	1.87	2.07	2.24	ns
		XC2VPX70	1.87	2.07	2.24	ns
		XC2VP100	N/A	2.38	2.45	ns

Notes:
1. Listed above are representative values where one global clock input drives one vertical clock line in each accessible column, and where all accessible IOB and CLB flip-flops are clocked by the global clock net.
2. Output timing is measured at 50% V_{CC} threshold with test setup shown in Figure 6. For other I/O standards, see Table 40.
3. DCM output jitter is already included in the timing calculation.

Global Clock Input to Output Delay for LVCMOS25, 12 mA, Fast Slew Rate, *Without* DCM

Table 54: **Global Clock Input to Output Delay for LVCMOS25, 12 mA, Fast Slew Rate, *Without* DCM**

			Speed Grade			
Description	**Symbol**	**Device**	**-7**	**-6**	**-5**	**Units**
LVCMOS25 Global Clock Input to Output Delay using Output Flip-flop, 12 mA, Fast Slew Rate, *without* DCM. For data *output* with different standards, adjust the delays with the values shown in IOB Output Switching Characteristics Standard Adjustments, page 28.						
Global Clock and OFF without DCM	T_{ICKOF}	XC2VP2	3.19	3.52	3.82	ns
		XC2VP4	3.39	3.91	4.27	ns
		XC2VP7	3.59	4.00	4.36	ns
		XC2VP20	3.62	4.08	4.46	ns
		XC2VPX20	3.62	4.08	4.46	ns
		XC2VP30	3.73	4.12	4.50	ns
		XC2VP40	3.89	4.28	4.67	ns
		XC2VP50	4.00	4.43	4.84	ns
		XC2VP70	4.38	4.87	5.33	ns
		XC2VPX70	4.38	4.87	5.33	ns
		XC2VP100	N/A	5.32	5.82	ns

Notes:
1. Listed above are representative values where one global clock input drives one vertical clock line in each accessible column, and where all accessible IOB and CLB flip-flops are clocked by the global clock net.
2. Output timing is measured at 50% V_{CC} threshold with test setup shown in Figure 6. For other I/O standards, see Table 40.
3. DCM output jitter is already included in the timing calculation.

Virtex-II Pro Pin-to-Pin Input Parameter Guidelines

All devices are 100% functionally tested. Listed below are representative values for typical pin locations and normal clock loading. Values are expressed in nanoseconds unless otherwise noted

Global Clock Set-Up and Hold for LVCMOS25 Standard, *With* DCM

Table 55: **Global Clock Set-Up and Hold for LVCMOS25 Standard, *With* DCM**

			Speed Grade			
Description	**Symbol**	**Device**	**-7**	**-6**	**-5**	**Units**
Input Setup and Hold Time Relative to Global Clock Input Signal for LVCMOS25 Standard.(1) For data input with different standards, adjust the setup time delay by the values shown in IOB Input Switching Characteristics Standard Adjustments, page 25.						
No Delay Global Clock and IFF(2) with DCM	T_{PSDCM}/T_{PHDCM}	XC2VP2	1.54/–0.58	1.54/–0.57	1.54/–0.56	ns
		XC2VP4	1.59/–0.59	1.59/–0.58	1.59/–0.57	ns
		XC2VP7	1.66/–0.61	1.66/–0.59	1.66/–0.57	ns
		XC2VP20	1.68/–0.53	1.68/–0.53	1.68/–0.50	ns
		XC2VPX20	1.68/–0.53	1.68/–0.53	1.68/–0.50	ns
		XC2VP30	1.81/–0.74	1.81/–0.74	1.81/–0.71	ns
		XC2VP40	1.85/–0.65	1.85/–0.64	1.85/–0.60	ns
		XC2VP50	1.85/–0.57	1.85/–0.54	1.85/–0.50	ns
		XC2VP70	1.86/–0.45	1.86/–0.39	1.86/–0.30	ns
		XC2VPX70	1.86/–0.45	1.86/–0.39	1.86/–0.30	ns
		XC2VP100	N/A	1.86/–0.35	1.87/–0.28	ns

Notes:

1. Setup time is measured relative to the Global Clock input signal with the fastest route and the lightest load. Hold time is measured relative to the Global Clock input signal with the slowest route and heaviest load.
2. These measurements include:
   - CLK0 and CLK180 DCM jitter
   - Worst-case duty-cycle distortion using CLK0 and CLK180, T_{DCD_CLK180}.
3. IFF = Input Flip-Flop or Latch

Global Clock Set-Up and Hold for LVCMOS25 Standard, *Without* DCM

Table 56: **Global Clock Set-Up and Hold for LVCMOS25 Standard, *Without* DCM**

			Speed Grade			
Description	**Symbol**	**Device**	**-7**	**-6**	**-5**	**Units**
Input Setup and Hold Time Relative to Global Clock Input Signal for LVCMOS25 Standard. For data input with different standards, adjust the setup time delay by the values shown in IOB Input Switching Characteristics Standard Adjustments, page 25.						
Full Delay Global Clock and IFF without DCM	T_{PSFD}/T_{PHFD}	XC2VP2	1.80/–0.44	1.85/–0.41	1.96/–0.43	ns
		XC2VP4	1.82/–0.53	1.83/–0.31	1.90/–0.29	ns
		XC2VP7	1.80/–0.34	1.81/–0.24	1.88/–0.19	ns
		XC2VP20	1.76/–0.24	1.83/–0.17	1.92/–0.15	ns
		XC2VPX20	1.76/–0.24	1.83/–0.17	1.92/–0.15	ns
		XC2VP30	1.75/–0.22	1.92/–0.26	1.99/–0.23	ns
		XC2VP40	2.25/–0.54	2.40/–0.56	2.49/–0.54	ns
		XC2VP50	2.93/–1.02	2.98/–0.93	3.00/–0.83	ns
		XC2VP70	2.79/–0.72	2.79/–0.55	2.78/–0.41	ns
		XC2VPX70	2.79/–0.72	2.79/–0.55	2.78/–0.41	ns
		XC2VP100	N/A	5.58/–2.35	5.60/–2.35	ns

Notes:
1. IFF = Input Flip-Flop or Latch
2. Setup time is measured relative to the Global Clock input signal with the fastest route and the lightest load. Hold time is measured relative to the Global Clock input signal with the slowest route and heaviest load.
3. A Zero “0” Hold Time listing indicates no hold time or a negative hold time. Negative values can not be guaranteed “best-case”, but if a “0” is listed, there is no positive hold time.

DCM Timing Parameters

All devices are 100% functionally tested. Because of the difficulty in directly measuring many internal timing parameters, those parameters are derived from benchmark timing patterns. The following guidelines reflect worst-case values across the recommended operating conditions. All output jitter and phase specifications are determined through statistical measurement at the package pins.

Operating Frequency Ranges

Table 57: **Operating Frequency Ranges**

			Speed Grade			
Description	**Symbol**	**Constraints**	**-7**	**-6**	**-5**	**Units**
Output Clocks (Low Frequency Mode)						
CLK0, CLK90, CLK180, CLK270	CLKOUT_FREQ_1X_LF_MIN		24.00	24.00	24.00	MHz
	CLKOUT_FREQ_1X_LF_MAX		270.00	210.00	180.00	MHz
CLK2X, CLK2X180(5,6)	CLKOUT_FREQ_2X_LF_MIN		48.00	48.00	48.00	MHz
	CLKOUT_FREQ_2X_LF_MAX		450.00	420.00	360.00	MHz
CLKDV	CLKOUT_FREQ_DV_LF_MIN		1.50	1.50	1.50	MHz
	CLKOUT_FREQ_DV_LF_MAX		140.00	140.00	120.00	MHz
CLKFX, CLKFX180	CLKOUT_FREQ_FX_LF_MIN		24.00	24.00	24.00	MHz
	CLKOUT_FREQ_FX_LF_MAX		240.00	240.00	210.00	MHz
Input Clocks (Low Frequency Mode)						
CLKIN (using DLL outputs)(1,3,4)	CLKIN_FREQ_DLL_LF_MIN		24.00	24.00	24.00	MHz
	CLKIN_FREQ_DLL_LF_MAX		270.00	210.00	180.00	MHz
CLKIN (using CLKFX outputs)(2,3,4)	CLKIN_FREQ_FX_LF_MIN		1.00	1.00	1.00	MHz
	CLKIN_FREQ_FX_LF_MAX		240.00	240.00	210.00	MHz
PSCLK	PSCLK_FREQ_LF_MIN		0.01	0.01	0.01	MHz
	PSCLK_FREQ_LF_MAX		450.00	420.00	360.00	MHz
Output Clocks (High Frequency Mode)						
CLK0, CLK180(6)	CLKOUT_FREQ_1X_HF_MIN		48.00	48.00	48.00	MHz
	CLKOUT_FREQ_1X_HF_MAX		450.00	420.00	360.00	MHz
CLKDV	CLKOUT_FREQ_DV_HF_MIN		3.00	3.00	3.00	MHz
	CLKOUT_FREQ_DV_HF_MAX		280.00	280.00	240.00	MHz
CLKFX, CLKFX180	CLKOUT_FREQ_FX_HF_MIN		210.00	210.00	210.00	MHz
	CLKOUT_FREQ_FX_HF_MAX		320.00	320.00	270.00	MHz
Input Clocks (High Frequency Mode)						
CLKIN (using DLL outputs)(1,3,4,6)	CLKIN_FREQ_DLL_HF_MIN		48.00	48.00	48.00	MHz
	CLKIN_FREQ_DLL_HF_MAX		450.00	420.00	360.00	MHz
CLKIN (using CLKFX outputs)(2,3,4)	CLKIN_FREQ_FX_HF_MIN		50.00	50.00	50.00	MHz
	CLKIN_FREQ_FX_HF_MAX		320.00	320.00	270.00	MHz
PSCLK	PSCLK_FREQ_HF_MIN		0.01	0.01	0.01	MHz
	PSCLK_FREQ_HF_MAX		450.00	420.00	360.00	MHz

Notes:
1. "DLL outputs" is used here to describe the outputs: CLK0, CLK90, CLK180, CLK270, CLK2X, CLK2X180, and CLKDV.
2. If both DLL and CLKFX outputs are used, follow the more restrictive specification.
3. If the CLKIN_DIVIDE_BY_2 attribute of the DCM is used, then double these values.
4. If the CLKIN_DIVIDE_BY_2 attribute of the DCM is used and CLKIN frequency > 400 MHz, CLKIN duty cycle must be within ±5% (45/55 to 55/45).
5. CLK2X and CLK2X180 may not be used as the input to the CLKFB pin. See the ***Virtex-II Pro Platform FPGA User Guide*** for more information.
6. For the XC2VP100 -6 device only, clock macros for corner DCMS (X0Y0, X5Y0, X0Y1, X5Y1) are required to operate at maximum clock frequency. See **XAPP685** for implementation examples.

Input Clock Tolerances

Table 58: **Input Clock Tolerances**

Description	Symbol	Constraints F_{CLKIN}	Speed Grade						Units
			–7		–6		–5		
			Min	Max	Min	Max	Min	Max	
Input Clock Low/High Pulse Width									
PSCLK	PSCLK_PULSE	< 1MHz	25.00		25.00		25.00		ns
PSCLK and CLKIN(3)	PSCLK_PULSE and CLKIN_PULSE	1 – 10 MHz	25.00		25.00		25.00		ns
		10 – 25 MHz	10.00		10.00		10.00		ns
		25 – 50 MHz	5.00		5.00		5.00		ns
		50 – 100 MHz	3.00		3.00		3.00		ns
		100 – 150 MHz	2.40		2.40		2.40		ns
		150 – 200 MHz	2.00		2.00		2.00		ns
		200 – 250 MHz	1.80		1.80		1.80		ns
		250 – 300 MHz	1.50		1.50		1.50		ns
		300 – 350 MHz	1.30		1.30		1.30		ns
		350 – 400 MHz	1.15		1.15		1.15		ns
		> 400 MHz	1.05		1.05		1.05		ns
Input Clock Cycle-Cycle Jitter (Low Frequency Mode)									
CLKIN (using DLL outputs)(1)	CLKIN_CYC_JITT_DLL_LF			±300		±300		±300	ps
CLKIN (using CLKFX outputs)(2)	CLKIN_CYC_JITT_FX_LF			±300		±300		±300	ps
Input Clock Cycle-Cycle Jitter (High Frequency Mode)									
CLKIN (using DLL outputs)(1)	CLKIN_CYC_JITT_DLL_HF			±150		±150		±150	ps
CLKIN (using CLKFX outputs)(2)	CLKIN_CYC_JITT_FX_HF			±150		±150		±150	ps
Input Clock Period Jitter (Low Frequency Mode)									
CLKIN (using DLL outputs)(1)	CLKIN_PER_JITT_DLL_LF			±1		±1		±1	ns
CLKIN (using CLKFX outputs)(2)	CLKIN_PER_JITT_FX_LF			±1		±1		±1	ns
Input Clock Period Jitter (High Frequency Mode)									
CLKIN (using DLL outputs)(1)	CLKIN_PER_JITT_DLL_HF			±1		±1		±1	ns
CLKIN (using CLKFX outputs)(2)	CLKIN_PER_JITT_FX_HF			±1		±1		±1	ns
Feedback Clock Path Delay Variation									
CLKFB off-chip feedback	CLKFB_DELAY_VAR_EXT			±1		±1		±1	ns

Notes:
1. “DLL outputs” is used here to describe the outputs: CLK0, CLK90, CLK180, CLK270, CLK2X, CLK2X180, and CLKDV.
2. If both DLL and CLKFX outputs are used, follow the more restrictive specification.
3. If DCM phase shift feature is used and CLKIN frequency > 200 Mhz, CLKIN duty cycle must be within ±5% (45/55 to 55/45).

Output Clock Jitter

Table 59: **Output Clock Jitter**

Description	Symbol	Constraints	Speed Grade			Units
			–7	–6	–5	
Clock Synthesis Period Jitter						
CLK0	CLKOUT_PER_JITT_0		±100	±100	±100	ps
CLK90	CLKOUT_PER_JITT_90		±150	±150	±150	ps
CLK180	CLKOUT_PER_JITT_180		±150	±150	±150	ps
CLK270	CLKOUT_PER_JITT_270		±150	±150	±150	ps
CLK2X, CLK2X180	CLKOUT_PER_JITT_2X		±200	±200	±200	ps
CLKDV (integer division)	CLKOUT_PER_JITT_DV1		±150	±150	±150	ps
CLKDV (non-integer division)	CLKOUT_PER_JITT_DV2		±300	±300	±300	ps
CLKFX, CLKFX180	CLKOUT_PER_JITT_FX		Note (1)	Note (1)	Note (1)	ps

Notes:
1. Use the **Jitter Calculator** on the Xilinx website (http://www.xilinx.com/applications/web_ds_v2/jitter_calc.htm) for CLKFX and CLKFX180 output jitter.

Output Clock Phase Alignment

Table 60: **Output Clock Phase Alignment**

Description	Symbol	Constraints	Speed Grade			Units
			–7	–6	–5	
Phase Offset Between CLKIN and CLKFB						
CLKIN/CLKFB	CLKIN_CLKFB_PHASE		±50	±50	±50	ps
Phase Offset Between Any DCM Outputs						
All CLK* outputs	CLKOUT_PHASE		±140	±140	±140	ps
Duty Cycle Precision						
DLL outputs(1)	CLKOUT_DUTY_CYCLE_DLL(2)		±150	±150	±150	ps
CLKFX outputs	CLKOUT_DUTY_CYCLE_FX		±100	±100	±100	ps

Notes:
1. “DLL outputs” is used here to describe the outputs: CLK0, CLK90, CLK180, CLK270, CLK2X, CLK2X180, and CLKDV.
2. CLKOUT_DUTY_CYCLE_DLL applies to the 1X clock outputs (CLK0, CLK90, CLK180, and CLK270) only if DUTY_CYCLE_CORRECTION = TRUE.
3. Specification also applies to PSCLK.

Miscellaneous Timing Parameters

Table 61: **Miscellaneous Timing Parameters**

Description	Symbol	Constraints F_{CLKIN}	Speed Grade			Units
			-7	-6	-5	
Time Required to Achieve LOCK						
Using DLL outputs(1)	LOCK_DLL:					
	LOCK_DLL_60	> 60MHz	20.00	20.00	20.00	us
	LOCK_DLL_50_60	50 - 60 MHz	25.00	25.00	25.00	us
	LOCK_DLL_40_50	40 - 50 MHz	50.00	50.00	50.00	us
	LOCK_DLL_30_40	30 - 40 MHz	90.00	90.00	90.00	us
	LOCK_DLL_24_30	24 - 30 MHz	120.00	120.00	120.00	us
Using CLKFX outputs	LOCK_FX_MIN		10.00	10.00	10.00	ms
	LOCK_FX_MAX		10.00	10.00	10.00	ms
Additional lock time with fine phase shifting	LOCK_DLL_FINE_SHIFT		50.00	50.00	50.00	us
Fine Phase Shifting						
Absolute shifting range	FINE_SHIFT_RANGE		10.00	10.00	10.00	ns
Delay Lines						
Tap delay resolution	DCM_TAP_MIN		30.00	30.00	30.00	ps
	DCM_TAP_MAX		50.00	50.00	50.00	ps

Notes:
1. "DLL outputs" is used here to describe the outputs: CLK0, CLK90, CLK180, CLK270, CLK2X, CLK2X180, and CLKDV.

Frequency Synthesis

Table 62: **Frequency Synthesis**

Attribute	Min	Max
CLKFX_MULTIPLY	2	32
CLKFX_DIVIDE	1	32

Parameter Cross-Reference

Table 63: **Parameter Cross-Reference**

Libraries Guide	Data Sheet
DLL_CLKOUT_{MIN|MAX}_LF	CLKOUT_FREQ_{1X|2X|DV}_LF
DFS_CLKOUT_{MIN|MAX}_LF	CLKOUT_FREQ_FX_LF
DLL_CLKIN_{MIN|MAX}_LF	CLKIN_FREQ_DLL_LF
DFS_CLKIN_{MIN|MAX}_LF	CLKIN_FREQ_FX_LF
DLL_CLKOUT_{MIN|MAX}_HF	CLKOUT_FREQ_{1X|DV}_HF
DFS_CLKOUT_{MIN|MAX}_HF	CLKOUT_FREQ_FX_HF
DLL_CLKIN_{MIN|MAX}_HF	CLKIN_FREQ_DLL_HF
DFS_CLKIN_{MIN|MAX}_HF	CLKIN_FREQ_FX_HF

Source-Synchronous Switching Characteristics

The parameters in this section provide the necessary values for calculating timing budgets for Virtex-II Pro source-synchronous transmitter and receiver data-valid windows.

Table 64: **Duty Cycle Distortion and Clock-Tree Skew**

Description	Symbol	Device	Speed Grade			Units
			–7	–6	–5	
Duty Cycle Distortion(1)	T_{DCD_LOCAL}	All	0.10	0.10	0.20	ns
	T_{DCD_CLK180}		0.10	0.11	0.13	ns
Clock Tree Skew(2)	T_{CKSKEW}	XC2VP2	0.13	0.13	0.13	ns
		XC2VP4	0.13	0.13	0.13	ns
		XC2VP7	0.13	0.13	0.13	ns
		XC2VP20	0.20	0.21	0.22	ns
		XC2VPX20	0.20	0.21	0.22	ns
		XC2VP30	0.20	0.22	0.24	ns
		XC2VP40	0.33	0.34	0.35	ns
		XC2VP50	0.40	0.41	0.42	ns
		XC2VP70	0.54	0.59	0.64	ns
		XC2VPX70	0.54	0.59	0.64	ns
		XC2VP100	N/A	0.79	0.87	ns

Notes:

1. These parameters represent the worst-case duty cycle distortion observable at the pins of the device using LVDS output buffers. For cases where other I/O standards are used, IBIS can be used to calculate any additional duty cycle distortion that might be caused by asymmetrical rise/fall times.

   T_{DCD_LOCAL} applies to cases where the dedicated path from the DCM to the BUFG is bypassed and where local (IOB) inversion is used to provide the negative-edge clock to the DDR element in the I/O. Users must follow the implementation guidelines contained in **XAPP685** for these specifications to apply.

   T_{DCD_CLK180} applies to cases where the CLK180 output of the DCM is used to provide the negative-edge clock to the DDR element in the I/O.
2. This value represents the worst-case clock-tree skew observable between sequential I/O elements. Significantly less clock-tree skew exists for I/O registers that are close to each other and fed by the same or adjacent clock-tree branches. Use the Xilinx FPGA_Editor and Timing Analyzer tools to evaluate clock skew specific to your application.

Table 65: **Package Skew**

Description	Symbol	Device/Package	Value	Units
Package Skew(1)	$T_{PKGSKEW}$	XC2VP2FF672	104	ps
		XC2VP4FF672	102	ps
		XC2VP7FF672	92	ps
		XC2VP7FF896	101	ps
		XC2VP20FF896	93	ps
		XC2VPX20FF896	93	ps
		XC2VP20FF1152	106	ps
		XC2VP30FF896	86	ps
		XC2VP30FF1152	112	ps
		XC2VP40FF1152	92	ps
		XC2VP40FF1148	100	ps
		XC2VP50FF1152	88	ps
		XC2VP50FF1148	101	ps
		XC2VP50FF1517	97	ps
		XC2VP70FF1517	95	ps
		XC2VP70FF1704	101	ps
		XC2VPX70FF1704	101	ps
		XC2VP100FF1704	86	ps
		XC2VP100FF1696	100	ps

Notes:
1. These values represent the worst-case skew between any two balls of the package: shortest flight time to longest flight time from Pad to Ball (7.1ps per mm).
2. Package trace length information is available for these device/package combinations. This information can be used to deskew the package.

Table 66: **Sample Window**

Description	Symbol	Device	Speed Grade			Units
			–7	–6	–5	
Sampling Error at Receiver Pins(1)	T_{SAMP}	All	0.50	0.50	0.50	ns

Notes:
1. This parameter indicates the total sampling error of Virtex-II Pro DDR input registers across voltage, temperature, and process. The characterization methodology uses the DCM to capture the DDR input registers' edges of operation.
2. These measurements include:
   - CLK0 and CLK180 DCM jitter
   - Worst-case duty-cycle distortion, T_{DCD_CLK180}
   - DCM accuracy (phase offset)
   - DCM phase shift resolution

   These measurements do not include package or clock tree skew.

Table 67: **Example Pin-to-Pin Setup/Hold: Source-Synchronous Configuration**

Description	Symbol	Device	Speed Grade			Units
			–7	–6	–5	
Example Data Input Set-Up and Hold Times Relative to a Forwarded Clock Input Pin,(1) Using DCM and Global Clock Buffer. Values represent an 18-bit bus located in Banks 2, 3, 6, or 7 and grouped to one Horizontal Global Clock Line. TRACE must be used to determine the actual values for any given design. For situations where clock and data inputs conform to different standards, adjust the setup and hold values accordingly using the values shown in IOB Input Switching Characteristics Standard Adjustments, page 25.						
No Delay Global Clock and IFF(2) with DCM	T_{PSDCM_0}/T_{PHDCM_0}	XC2VP2	0.23/0.39	0.21/0.42	0.21/0.42	ns
		XC2VP4	0.26/0.37	0.24/0.40	0.24/0.41	ns
		XC2VP7	0.18/ 0.36	0.18/ 0.40	0.18/ 0.41	ns
		XC2VP20	0.14/ 0.41	0.13/ 0.42	0.12/ 0.44	ns
		XC2VPX20	0.14/ 0.41	0.13/ 0.42	0.12/ 0.44	ns
		XC2VP30	0.29/ 0.25	0.31/ 0.24	0.31/ 0.24	ns
		XC2VP40	0.25/ 0.30	0.26/ 0.29	0.27/ 0.29	ns
		XC2VP50	0.18/ 0.36	0.18/ 0.38	0.17/ 0.39	ns
		XC2VP70	0.18/ 0.37	0.18/ 0.38	0.18/ 0.38	ns
		XC2VPX70	0.18/ 0.37	0.18/ 0.38	0.18/ 0.38	ns
		XC2VP100	N/A	0.18/ 0.33	0.19/ 0.37	ns

Notes:
1. The timing values were measured using the fine-phase adjustment feature of the DCM. These measurements include:
   - CLK0 and CLK180 DCM jitter
   - Worst-case duty-cycle distortion using CLK0 and CLK180, T_{DCD_CLK180}

   Package skew is not included in these measurements.
2. IFF = Input Flip-Flop

Source Synchronous Timing Budgets

This section describes how to use the parameters provided in the Source-Synchronous Switching Characteristics section to develop system-specific timing budgets. The following analysis provides information necessary for determining Virtex-II Pro contributions to an overall system timing analysis; no assumptions are made about the effects of Inter-Symbol Interference or PCB skew.

Virtex-II Pro Transmitter Data-Valid Window (T_X)

T_X is the minimum aggregate valid data period for a source-synchronous data bus at the pins of the device and is calculated as follows:

T_X = Data Period - [Jitter(1) + Duty Cycle Distortion(2) + TCKSKEW(3) + TPKGSKEW(4)]

Notes:
1. Jitter values and accumulation methodology to be provided in a future release of this document. The absolute period jitter values found in the DCM Timing Parameters section of the particular DCM output clock used to clock the IOB FF can be used for a best case analysis.
2. This value depends on the clocking methodology used. See Note1 for Table 64.
3. This value represents the worst-case clock-tree skew observable between sequential I/O elements. Significantly less clock-tree skew exists for I/O registers that are close to each other and fed by the same or adjacent clock-tree branches. Use the Xilinx FPGA_Editor and Timing Analyzer tools to evaluate clock skew specific to your application.
4. These values represent the worst-case skew between any two balls of the package: shortest flight time to longest flight time from Pad to Ball.

Virtex-II Pro Receiver Data-Valid Window (R_X)

R_X is the required minimum aggregate valid data period for a source-synchronous data bus at the pins of the device and is calculated as follows:

$$R_X = [TSAMP^{(1)} + TCKSKEW^{(2)} + TPKGSKEW^{(3)}]$$

Notes:

1. This parameter indicates the total sampling error of Virtex-II Pro DDR input registers across voltage, temperature, and process. The characterization methodology uses the DCM to capture the DDR input registers' edges of operation. These measurements include:
   - CLK0 and CLK180 DCM jitter in a quiet system
   - Worst-case duty-cycle distortion
   - DCM accuracy (phase offset)
   - DCM phase shift resolution.

   These measurements do not include package or clock tree skew.
2. This value represents the worst-case clock-tree skew observable between sequential I/O elements. Significantly less clock-tree skew exists for I/O registers that are close to each other and fed by the same or adjacent clock-tree branches. Use the Xilinx FPGA_Editor and Timing Analyzer tools to evaluate clock skew specific to your application.
3. These values represent the worst-case skew between any two balls of the package: shortest flight time to longest flight time from Pad to Ball.

Revision History

This section records the change history for this module of the data sheet.

Date	Version	Revision
01/31/02	1.0	Initial Xilinx release.
06/17/02	2.0	• Added new Virtex-II Pro family members. • Added timing parameters from speedsfile **v1.62**. • Added Table 46, Pipelined Multiplier Switching Characteristics. • Added 3.3V-vs-2.5V table entries for some parameters.
09/03/02	2.1	• Added Source-Synchronous Switching Characteristics section. • Added absolute max ratings for 3.3V-vs-2.5V parameters in Table 1. • Added recommended operating conditions for V_{IN} and RocketIO footnote to Table 2. • Updated SSTL2 values in Table 6. Added SSTL18 values: Table 6, Table 39, Table 32. [Table 32 removed in v2.8.] • Added Table 10, which contains LVPECL DC specifications.
09/27/02	2.2	Added section General Power Supply Requirements.
11/20/02	2.3	Updated parametric information in: • Table 1: Increase Absolute Max Rating for V_{CCO}, V_{REF}, V_{IN}, and V_{TS} from 3.6V to 3.75V. Delete cautionary footnotes related to voltage overshoot/undershoot. • Table 2: Delete V_{CCO} specifications for 2.5V and below operation. Delete footnote referencing special information for 3.3V operation. Add footnote for PCI/PCI-X. • Table 3: Add I_{BATT}. Delete I_L specifications for 2.5V and below operation. • Table 4: Add Typical Quiescent Supply Currents for XC2VP4 and XC2VP7 only • Table 6: Correct I_{OL} and I_{OH} for SSTL2 I. Add rows for LVTTL, LVCMOS33, and PCI-X. Correct max V_{IH} from V_{CCO} to 3.6V. • Table 7: Correct Min/Max V_{OD}, V_{OCM}, and V_{ICM} • Table 10: Reformat LVPECL DC Specifications to match Virtex-II data sheet format • Table 12: Correct parameter name from Differential Output Voltage to Single-Ended Output Voltage Swing. • Table 16: Add CPMC405CLOCK max frequencies • Table 27: Add footnote regarding serial data rate limitation in -5 part. • Table 39: Add rows for LVTTL, LVCMOS33, and PCI-X. • Table 32: Add LVTTL, LVCMOS33, and PCI-X. Correct all capacitive load values (except PCI/PCI-X) to 0 pF. [Table 32 removed in v2.8.] • Table 51: Correct CCLK max frequencies
11/25/02	2.4	Table 1: Correct lower limit of voltage range of V_{IN} and V_{TS} from –0.3V to –0.5V for 3.3V.

Date	Version	Revision
12/03/02	2.5	Updated parametric information in: • Table 1: Correct lower limit of voltage range of V_{IN} and V_{TS} from –0.5V to –0.3V for 3.3V. • Table 2: Add footnote (2) regarding V_{CCAUX} voltage droop. Renumbered other notes. • Table 12: Add waveform diagrams (Figure 1 and Figure 2) illustrating DV_{OUT} (single-ended) and DV_{PPOUT} (differential). • Table 23: Indicate REFCLK upper frequency limitation; relate REFCLK parameters to REFCLK2, BREFCLK, and BREFCLK2; correct T_{RCLK} and T_{FCLK} values and unit of measurement. • Table 60: Add qualifying footnote to CLKOUT_DUTY_CYCLE_DLL.
01/20/03	2.6	Updated parametric information in: • Table 12: Correct DV_{IN} Min (200 mV to 175 mV) and DV_{IN} Max (1000 mV to 2000 mV). • Table 23: Correct T_{RCLK} /T_{FCLK} Typ (400 ps to 600 ps) and Max (600 ps to 1000 ps). Add footnote (2) to qualify Max T_{GJTT} parameter. • Table 59: Correct hyperlink in footnote (1) to point directly to Answer Record 13645. • Move clock parameters from Table 18, Table 19, Table 20, and Table 21 to Table 16.
03/24/03	2.7	• Added/updated timing parameters from speedsfile **v1.76**. • Table 2: Delete first table footnote and renumber all others. • Table 3: Add "sample-tested" to I_L. Remove "Device" column, unnecessary. • Table 8: Update V_{OCM} (Typ) to 1.250V. • Table 10: Update LVPECL_25 DC parameters. • Table 23: Update F_{GCLK} frequency ranges. Break out T_{GJTT} by operating speed. • Table 27: Update F_{GTX} frequency ranges. Correct T_{DJ} to 0.17 UI, T_{RJ} to o.18 UI. • Table 39: Update V_{REF} (Typ) for HSTL Class I/II from 1.08V to 0.90V. • Table 43, Table 44: Correct parameter name "CE input (WS)" to "SR input". • Table 64: Break out T_{DCD_CLK0} by device type.
05/27/03	2.8	• Updated time and frequency parameters as per speedsfile **v1.78**. • Table 3: Added values for I_{REF}, I_L, I_{RPU}, I_{RPD} • Corrected I_{CCINTQ} (Table 4) and $I_{CCINTMIN}$ (Table 5) for XC2VP20 to 600 mA. • Table 4: Updated/Added Typ and Max quiescent current values for XC2VP7 and XC2VP20. Added footnote specifying parameters are for Commercial Grade parts. • Table 5: Added footnote specifying parameters are for Commercial Grade parts. • Table 6: Corrected V_{IH} (Max) for LVTTL and LVCMOS33 standards from 3.6V to 3.45V. Changed V_{IL} (Min) for all standards to –0.2V. Corrected V_{IL} (Max) for LVCMOS15 and LVCMOS18 from 20% V_{CCO} to 30% V_{CCO}. • Table 10: Corrected LVPECL_25 Min and Max values for V_{IH} and V_{IL}. Added explanatory text above table. • Table 13 and Table 14 (pin-pin and reg-reg performance): Changed device specified from XC2VP7FF672-6 to XC2VP20FF1152-6. • Table 15: Updated to show devices XC2VP7 and XC2VP20 as Preliminary for the -6 speed grade and Production for the -5 speed grade. • Removed former Table 32, Standard Capacitive Loads. • Table 52: Updated T_{TAPTCK} from 4.0 ns to 5.5 ns. • Table 59: Modified footnote referenced at CLKFX/CLKFX180 to point to the online Jitter Calculator. • Added Figure 6 and accompanying procedure for measuring standard adjustments.
05/27/03 (cont'd)	2.8 (cont'd)	• Table 1: Footnote (2) rewritten to specify “one or more banks.” • Table 57: Some DCM parameters were erroneously missing from v2.8 (single-module version) due to a document compilation error. The concatenated full data sheet version was not affected. These parameters have been restored.

Date	Version	Revision
08/25/03	2.9	• Updated time and frequency parameters as per speedsfile **v1.81**. • Table 1: Footnote (2) rewritten to specify “one or more banks.” • Table 2: Added footnote referring to XAPP659 for 3.3V I/O operation. • Table 53 and Table 54: Revised test setup footnote to refer to Figure 6. Previously specified a capacitive load parameter. • Table 57: Due to a document compilation error in v2.8, some DCM parameters were erroneously omitted from the full data sheet file (all four modules concatenated), though not from the stand-alone Module 3 file. The omitted parameters have been restored. • Table 64 and Table 66: Corrected parameters to expression in picoseconds, as labeled. Previously expressed in nanoseconds, but labeled picoseconds. • Figure 6: Added note to figure regarding termination resistors. • Table 5: Added $I_{CCINTMIN}$ for XC2VP30 device.
09/10/03	2.10	• Figure 7: Changed representation of mode pins M0, M1, and M2 indicating that they must be held to a constant DC level during and after configuration. • Table 49: Added footnote indicating that mode pins M0, M1, and M2 must be held to a constant DC level during and after configuration.
10/14/03	2.11	• Table 1: Deleted Footnote (2), which had derated the absolute maximum T_J when one or more banks operated at 3.3V. Changed T_J description from “Operating junction temperature” to “Maximum junction temperature”. Added new Footnote (2) linking to website for package thermal data. • Table 4 and Table 5: Filled in power-on and quiescent current parameters for all devices through XC2VP70. Added Industrial Grade multiplier specification to Footnote (1) in both tables. • In section General Power Supply Requirements, replaced reference to Answer Record 11713 with reference to **XAPP689** regarding handling of simultaneously switching outputs (SSO). • In section I/O Standard Adjustment Measurement Methodology: - Table 39 renamed Input Delay Measurement Methodology. Added footnotes. - Added new Table 40, Output Delay Measurement Methodology. - Replaced Figure 6, Generalized Test Setup, with new drawing. - Revised and extended text describing output delay measurement procedure. • Table 58: For Input Clock Low/High Pulse Width, PSCLK and CLKIN, changed existing Footnote (2) to new Footnote (3).
11/10/03	2.12	• Table 1: Changed 3.3V absolute max V_{IN} and V_{TS} from 3.75V to 4.05V. Added footnote referring to **XAPP659**. • Table 4: Removed MIN column from table.
12/05/03	3.0	• XC2VP2 through XC2VP70 speed grades -5, -6, and -7, and XC2VP100 speed grades -5 and -6, updated and released to **Production status** as per speedsfile **v1.83**. Featured changes: - Speedsfile parameter values for -7 speed grade added for devices XC2VP2-XC2VP70. - Table 13 and Table 14: Pin-to-pin and register-to_register performance parameter values added. - Table 64: New parameter T_{DCD_LOCAL} (and footnote) replaces T_{DCD_CLK0}. - All remaining source-synchronous parameter values added (Table 64 & following).

Date	Version	Revision
12/05/03 (cont'd)	3.0 (cont'd)	• Non-speedsfile parameter values added or updated: • Table 3: I_{BATT}. • Table 4: For XC2VP100, I_{CCINTQ}, I_{CCOQ}, and I_{CCAUXQ}. • Table 5: For XC2VP100, $I_{CCINTMIN}$. • Table 17: T_{CPWL} and T_{CPWH}. • Table 25: Added explanatory footnote to T_{RXLAT} (MGT receiver latency) max value. • Table 57: Added Footnote (3) regarding use of CLKIN_DIVIDE_BY_2 attribute.
02/19/04	3.1	• Updated time and frequency parameters as per speedsfile **v1.85**. • Table 2, Recommended Operating Conditions: Revised Footnotes (4) and (6). • Table 4, Quiescent Supply Current: Added Footnote (1) and updated Typical parameters. • Table 10, LVPECL DC Specifications: Added parameter values for Maximum Differential Input Voltage (LVPECL). • Table 14, Register-to-Register Performance: Removed reference to a number of designs for which test data is no longer provided. • Table 16, Processor Clocks Absolute AC Characteristics: Added Footnote (1) referring to XAPP755. • Added Table 41, Clock Distribution Switching Characteristics. • Revised section Configuration Timing, page 39 through page 41, and JTAG Test Access Port Switching Characteristics, page 42, with improved timing diagrams, parameter tables, and organization. • Table 50, Master/Slave Serial Mode Timing Characteristics, and Table 51, SelectMAP Mode Write Timing Characteristics: Added parameter $F_{CC_STARTUP}$. • Table 51, SelectMAP Mode Write Timing Characteristics: Broke out T_{SMDCC}/T_{SMCCD}, DATA[0:7] setup/hold time, by device, and added new parameter specifications for XC2VP70 and XC2VP100 devices. • Table 57, Operating Frequency Ranges: Added callouts for existing Footnote (3) to the four CLKIN parameters. Added new Footnote (4) to the four CLKIN parameters. Added new Footnote (5) to CLK2X, CLK2X180. Added new Footnote (6) to CLK2X, CLK2X180; CLK0, CLK180; and CLKIN (using DLL outputs).
03/09/04	3.1.1	• Recompiled for backward compatibility with Acrobat 4 and above. No content changes.
04/22/04	3.2	• Table 2, Recommended Operating Conditions: Corrected VTTX/VTRX lower voltage limit from 1.8V to 1.6V. • Table 5, Power-On Current for Virtex-II Pro Devices: Added Footnote (2) stating that listed I_{CCOMIN} values apply to the entire device (all banks). • Table 40, Output Delay Measurement Methodology: Corrected V_{MEAS} for LVTTL from 1.4V to 1.65V. • Table 57, Operating Frequency Ranges: Corrected CLKOUT_FREQ_1X_LF_MAX and CLKIN_FREQ_DLL_LF_MAX for -7 devices from 210 MHz to 270 MHz. • Table 65, Package Skew: Removed XC2VP40FF1517.
06/30/04	4.0	Merged in DS110-3 (Module 3 of Virtex-II Pro X data sheet). This merge added numerous previously unpublished RocketIO X MGT parameters. Specifications in this revision are from speedsfile **v1.86**.

Date	Version	Revision
11/17/04	4.1	• Figure 8, Figure 9: Corrected T_{CCO} / DOUT to refer to the falling edge of CCLK. • Table 23: Added Footnote (4) to T_{PHASE} indicating an 8B/10B-type bitstream. Corrected T_{LOCK} from Typ to Max specification. Additional description of "2X oversampling" added to half-rate operation condition for F_{GCLK}, and added Footnote (2) requiring use of oversampling techniques in XAPP572 for serial bit rates under 1 Gb/s. • Table 25: Converted bit rate conditions for jitter parameters into four ranges. Added Footnote (2) requiring use of oversampling techniques in XAPP572 for serial bit rates under 1 Gb/s. • Table 27: Additional description of "2X oversampling" added to half-speed clock description for F_{GGTX}. Converted bit rate conditions for jitter parameters into four ranges. Added Footnotes (3) and (4) requiring use of oversampling techniques in XAPP572 for serial bit rates under 1 Gb/s. • Table 40: Changed capacitance C_{REF} for all PCI/PCI-X standards from 0 pF to 10 pF. • Table 49: Added Min/Max specifications for T_{ICCK}. • Section Power-On Power Supply Requirements, page 5: Added word "monotonically" to description of V_{CCINT} ramp-on requirements. Removed requirement that V_{CCAUX} must be powered on before or with V_{CCO}.
03/01/05	4.2	• Updated values in Virtex-II Pro Performance Characteristics and Virtex-II Pro Switching Characteristics tables, based on values extracted from **speedsfile version 1.90**. • Table 1 and Table 2: Corrected VCCAUXTX and VCCAUXRX to AVCCAUXTX and AVCCAUXRX respectively. • Table 3: Further clarified P_{RXTX} (MGT power dissipation) by explaining measurement method in Footnote (3). • Table 5: Added power-on current specifications for XC2VPX70 device. • Table 22: Changed F_{GTOL} from ±100 ppm to ±350 ppm. • Table 22 and Table 23: Changed T_{GJTT} bit rate qualifiers from fixed bit rates to bit rate ranges. • Table 36, Table 38, Table 39, and Table 40: Restructured these I/O-related tables to include descriptions, as well as the actual IOSTANDARD attributes (used in the Xilinx ICE™ software) for all I/O standards. • Table 36: Rearranged I/O standards in a more logical order. • Table 37: Added parameter T_{RPW} (Minimum Pulse Width, SR Input). • Table 38: Changed "Csl" to "C_{REF}" to agree with Figure 6 and Table 40. Rearranged I/O standards in a more logical order. • Table 39: Added footnote defining equivalents for DCI standards. • Table 40: Added Footnotes (2) and (3) to PCI/PCI-X capacitive load (C_{REF}) values. • Table 47: Added parameter T_{BCCS}, CLKA to CLKB Setup Time. • Table 50: Added Footnote (1) indicating that F_{CC_SERIAL} should not exceed $F_{CC_STARTUP}$ if CCLK frequency is not adjustable. • Table 52: T_{TCKTDO} corrected from a "Min" to a "Max" specification.
06/20/05	4.3	• Table 12: Added specifications for Differential Input Impedance.

Date	Version	Revision
09/15/05	4.4	• Table 2: Added Footnote (7) to AVCCAUXRX for RocketIO X (1.8V for all non-8B/10B-encoded data). • Table 3: - Power dissipation for 10.3125 Gb/s deleted. - Max $I_{CCAUXTX}$ and $I_{CCAUXRX}$ specifications added for Virtex-II Pro. • Table 11: Added specification for minimum p-p differential input voltage. • Table 22: - F_{GCLK}: Changed high end of range to 425 MHz. - T_{GJTT}: Changed measurement units to picoseconds and added maximum specifications for two bit rate ranges. - T_{LOCK}: Changed measurement units to microseconds and adderd typical specification. - T_{PHASE}: Changed measurement units to microseconds and adderd typical and maximum specifications. • Table 24: - All parameters: Deleted specifications for 10.3125 Gb/s. - T_{RJTOL}: Added typical specifications. - T_{JTOL}, T_{SJTOL}, and T_{DDJTOL}: Added typical and maximum specifications. • Table 26: Restructured table. Total Jitter parameter added. All jitter parameters respecified. • Table 28: Restructured table and added new specifications.
10/10/05	4.5	• Changed XC2VPX70 variable baud rate specification to fixed-rate operation at 4.25 Gb/s. • Table 15: Removed -7 designations for XC2VPX20 and XC2VPX70 devices.
03/05/07	4.6	*No changes in Module 3 for this revision.*
11/05/07	4.7	Updated copyright notice and legal disclaimer.
06/21/11	5.0	Added *Product Not Recommended for New Designs* banner. Changed I_{TRX} typical value in Table 3.

Notice of Disclaimer

THE XILINX HARDWARE FPGA AND CPLD DEVICES REFERRED TO HEREIN (“PRODUCTS”) ARE SUBJECT TO THE TERMS AND CONDITIONS OF THE XILINX LIMITED WARRANTY WHICH CAN BE VIEWED AT http://www.xilinx.com/warranty.htm. THIS LIMITED WARRANTY DOES NOT EXTEND TO ANY USE OF PRODUCTS IN AN APPLICATION OR ENVIRONMENT THAT IS NOT WITHIN THE SPECIFICATIONS STATED IN THE XILINX DATA SHEET. ALL SPECIFICATIONS ARE SUBJECT TO CHANGE WITHOUT NOTICE. PRODUCTS ARE NOT DESIGNED OR INTENDED TO BE FAIL-SAFE OR FOR USE IN ANY APPLICATION REQUIRING FAIL-SAFE PERFORMANCE, SUCH AS LIFE-SUPPORT OR SAFETY DEVICES OR SYSTEMS, OR ANY OTHER APPLICATION THAT INVOKES THE POTENTIAL RISKS OF DEATH, PERSONAL INJURY, OR PROPERTY OR ENVIRONMENTAL DAMAGE (“CRITICAL APPLICATIONS”). USE OF PRODUCTS IN CRITICAL APPLICATIONS IS AT THE SOLE RISK OF CUSTOMER, SUBJECT TO APPLICABLE LAWS AND REGULATIONS.

Virtex-II Pro Data Sheet

The Virtex-II Pro Data Sheet contains the following modules:

- Virtex-II Pro and Virtex-II Pro X Platform FPGAs: Introduction and Overview (Module 1)
- Virtex-II Pro and Virtex-II Pro X Platform FPGAs: Functional Description (Module 2)
- Virtex-II Pro and Virtex-II Pro X Platform FPGAs: DC and Switching Characteristics (Module 3)
- Virtex-II Pro and Virtex-II Pro X Platform FPGAs: Pinout Information (Module 4)

Virtex-II Pro and Virtex-II Pro X Platform FPGAs: Pinout Information

DS083 (v5.0) June 21, 2011 **Product Specification**

This document provides Virtex™-II Pro Device/Package Combinations, Maximum I/Os, and Virtex-II Pro Pin Definitions, followed by pinout tables, for these packages:

- FG256/FGG256 Fine-Pitch BGA Package
- FG456/FGG456 Fine-Pitch BGA Package
- FG676/FGG676 Fine-Pitch BGA Package
- FF672 Flip-Chip Fine-Pitch BGA Package
- FF896 Flip-Chip Fine-Pitch BGA Package
- FF1152 Flip-Chip Fine-Pitch BGA Package
- FF1148 Flip-Chip Fine-Pitch BGA Package
- FF1517 Flip-Chip Fine-Pitch BGA Package
- FF1704 Flip-Chip Fine-Pitch BGA Package
- FF1696 Flip-Chip Fine-Pitch BGA Package

For device pinout diagrams and layout guidelines, refer to the **Virtex-II Pro Platform FPGA User Guide**. ASCII package pinout files are also available for download from the Xilinx website (**www.xilinx.com**).

Virtex-II Pro Device/Package Combinations and Maximum I/Os(1)

Wire-bond and flip-chip packages are available. Table 1 and Table 2 show the maximum number of user I/Os possible in wire-bond and flip-chip packages, respectively.

- FG denotes wire-bond fine-pitch BGA (1.00 mm pitch).
- FGG denotes Pb-free wire-bond fine-pitch BGA (1.00 mm pitch).
- FF denotes flip-chip fine-pitch BGA (1.00 mm pitch)

Table 1: **Wire-Bond Packages Information**

Package(1)	FG256/ FGG256	FG456/ FGG456	FG676/ FGG676
Pitch (mm)	1.00	1.00	1.00
Size (mm)	17 x 17	23 x 23	26 x 26
Maximum I/Os	140	248	412

Notes:
1. Wire-bond packages include FGG*nnn* Pb-free versions. See Virtex-II Pro Ordering Examples (Module 1).

Table 2: **Flip-Chip Packages Information**

Package	FF672	FF896	FF1152	FF1148	FF1517	FF1704	FF1696
Pitch (mm)	1.00	1.00	1.00	1.00	1.00	1.00	1.00
Size (mm)	27 x 27	31 x 31	35 x 35	35 x 35	40 x 40	42.5 x 42.5	42.5 x 42.5
Maximum I/Os	396	556	644	812	964	1040	1200

Table 3 shows the number of available I/Os, the number of RocketIO™ (or RocketIO X) multi-gigabit transceiver (MGT) pins, and the number of differential I/O pairs for each Virtex-II Pro device/package combination. The number of I/Os per package includes all user I/Os *except* the fifteen control pins (CCLK, DONE, M0, M1, M2, PROG_B, PWRDWN_B, TCK, TDI, TDO, TMS, HSWAP_EN, DXN, DXP, and RSVD), the nine (per transceiver) RocketIO MGT pins (TXP, TXN, RXP, RXN, AVCCAUXTX, AVCCAUXRX, VTTX, VTRX, and GNDA), and for Virtex-II Pro X devices only, the two BREFCLKN/ BREFCLKP differential clock input pairs (four pins). The Virtex-II Pro X devices are highlighted in bold type.

1. Unless otherwise noted, "Virtex-II Pro" refers to members of the Virtex-II Pro and/or Virtex-II Pro X families.

© 2000–2011 Xilinx, Inc. All rights reserved. XILINX, the Xilinx logo, the Brand Window, and other designated brands included herein are trademarks of Xilinx, Inc. PowerPC is a trademark of IBM Corp. and is used under license. All other trademarks are the property of their respective owners.

Table 3: **Virtex-II Pro Available I/Os and RocketIO MGT Pins per Device/Package Combination**

Virtex-II Pro Device	User I/Os & RocketIO MGT Pins	Virtex-II Pro Package(1)									
		FG256/ FGG256	FG456/ FGG456	FG676/ FGG456	FF672	FF896	FF1152	FF1148	FF1517	FF1704	FF1696
XC2VP2	Available User I/Os	140	156	-	204	-	-	-	-	-	-
	RocketIO MGT Pins	36	36	-	36	-	-	-	-	-	-
	Differential I/O Pairs	68	76	-	100	-	-	-	-	-	-
XC2VP4	Available User I/Os	140	248	-	348	-	-	-	-	-	-
	RocketIO MGT Pins	36	36	-	36	-	-	-	-	-	-
	Differential I/O Pairs	68	122	-	172	-	-	-	-	-	-
XC2VP7	Available User I/Os	-	248	-	396	396	-	-	-	-	-
	RocketIO MGT Pins	-	72	-	72	72	-	-	-	-	-
	Differential I/O Pairs	-	122	-	196	196	-	-	-	-	-
XC2VP20	Available User I/Os	-	-	404	-	556	564	-	-	-	-
	RocketIO MGT Pins	-	-	72	-	72	72	-	-	-	-
	Differential I/O Pairs	-	-	196	-	272	276	-	-	-	-
XC2VPX20	**Available User I/Os**	-	-	-	-	**552**	-	-	-	-	-
	RocketIO X MGT Pins	-	-	-	-	**72**	-	-	-	-	-
	Differential I/O Pairs	-	-	-	-	**270**	-	-	-	-	-
XC2VP30	Available User I/Os	-	-	416	-	556	644	-	-	-	-
	RocketIO MGT Pins	-	-	72	-	72	72	-	-	-	-
	Differential I/O Pairs	-	-	202	-	272	316	-	-	-	-
XC2VP40	Available User I/Os	-	-	416	-	-	692	804	-	-	-
	RocketIO MGT Pins	-	-	72	-	-	108	0	-	-	-
	Differential I/O Pairs	-	-	202	-	-	340	396	-	-	-
XC2VP50	Available User I/Os	-	-		-	-	692	812	852	-	-
	RocketIO MGT Pins	-	-		-	-	144	0	144	-	-
	Differential I/O Pairs	-	-		-	-	340	400	420	-	-

Table 3: **Virtex-II Pro Available I/Os and RocketIO MGT Pins per Device/Package Combination *(Continued)***

Virtex-II Pro Device	User I/Os & RocketIO MGT Pins	Virtex-II Pro Package(1)									
		FG256/ FGG256	FG456/ FGG456	FG676/ FGG456	FF672	FF896	FF1152	FF1148	FF1517	FF1704	FF1696
XC2VP70	Available User I/Os	-	-		-	-	-	-	964	996	-
	RocketIO MGT Pins	-	-		-	-	-	-	144	180	-
	Differential I/O Pairs	-	-		-	-	-	-	476	492	-
XC2VPX70	**Available User I/Os**	**-**	**-**		**-**	**-**	**-**	**-**	**-**	**992**	**-**
	RocketIO X MGT Pins	**-**	**-**		**-**	**-**	**-**	**-**	**-**	**180**	**-**
	Differential I/O Pairs	**-**	**-**		**-**	**-**	**-**	**-**	**-**	**490**	**-**
XC2VP100	Available User I/Os	-	-		-	-	-	-	-	1040	1164
	RocketIO MGT Pins	-	-		-	-	-	-	-	180	0
	Differential I/O Pairs	-	-		-	-	-	-	-	512	572

Notes:
1. Wire-bond packages include FGG*nnn* Pb-free versions. See Virtex-II Pro Ordering Examples (Module 1)

Virtex-II Pro Pin Definitions

This section describes the pinouts for Virtex-II Pro devices in the following packages:

- FG256/FGG256, FG456/FGG456, and FG676/FGG676: wire-bond fine-pitch BGA of 1.00 mm pitch
- FF672, FF896, FF1148, FF1152, FF1517, FF1696, and FF1704: flip-chip fine-pitch BGA of 1.00 mm pitch

All of the devices supported in a particular package are pin-out-compatible and are listed in the same table (one table per package). Pins that are not available for smaller devices are listed in right-hand columns.

Each device is split into eight I/O banks to allow for flexibility in the choice of I/O standards. Global pins, including JTAG, configuration, and power/ground pins, are listed at the end of each table. Table 4 provides definitions for all pin types.

All Virtex-II Pro pinout tables are available on the distribution CD-ROM, or on the web (at http://www.xilinx.com).

Pin Definitions

Table 4 provides a description of each pin type listed in Virtex-II Pro pinout tables.

Table 4: **Virtex-II Pro Pin Definitions**

Pin Name	Direction	Description
User I/O Pins:		
IO_LXXY_#	Input/Output/ Bidirectional	All user I/O pins are capable of differential signalling and can implement LVDS, ULVDS, BLVDS, LVPECL, or LDT pairs. Each user I/O is labeled "**IO_LXXY_#**", where: **IO** indicates a user I/O pin. **LXXY** indicates a differential pair, with **XX** a unique pair in the bank and **Y = P/N** for the positive and negative sides of the differential pair. **#** indicates the bank number (0 through 7)
Dual-Function Pins:		
IO_LXXY_#/ZZZ	The *dual-function pins* are labelled "**IO_LXXY_#/ZZZ**", where "**ZZZ**" can be one of the following pins: Per Bank - **VRP, VRN,** or **VREF** Globally - **GCLKX(S/P), BUSY/DOUT, INIT_B, D0/DIN – D7, RDWR_B,** or **CS_B** These dual functions are defined in the following section:	
"ZZZ" (Dual Function) Definitions:		
D0/DIN, D1, D2, D3, D4, D5, D6, D7	Input/Output	• *In SelectMAP mode,* D0 through D7 are configuration data pins. These pins become user I/Os after configuration, unless the SelectMAP port is retained. • *In bit-serial modes,* DIN (D0) is the single-data input. This pin becomes a user I/O after configuration.
CS_B	Input	In SelectMAP mode, this is the active-low Chip Select signal. The pin becomes a user I/O after configuration, unless the SelectMAP port is retained.
RDWR_B	Input	In SelectMAP mode, this is the active-low Write Enable signal. The pin becomes a user I/O after configuration, unless the SelectMAP port is retained.
BUSY/DOUT	Output	• *In SelectMAP mode,* BUSY controls the rate at which configuration data is loaded. The pin becomes a user I/O after configuration, unless the SelectMAP port is retained. • *In bit-serial modes,* DOUT provides preamble and configuration data to downstream devices in a daisy-chain. The pin becomes a user I/O after configuration.
INIT_B	Bidirectional (open-drain)	When Low, this pin indicates that the configuration memory is being cleared. When held Low, the start of configuration is delayed. During configuration, a Low on this output indicates that a configuration data error has occurred. The pin becomes a user I/O after configuration.

Table 4: **Virtex-II Pro Pin Definitions *(Continued)***

Pin Name	Direction	Description
GCLKx (S/P)	Input/Output	These are clock input pins that connect to Global Clock Buffers. These pins become regular user I/Os when not needed for clocks. These pins can be used to clock the RocketIO transceiver. See the **RocketIO Transceiver User Guide** for design guidelines and BREFCLK-specific pins, by device.
VRP	Input	This pin is for the DCI voltage reference resistor of P transistor (per bank).
VRN	Input	This pin is for the DCI voltage reference resistor of N transistor (per bank).
V_{REF}	Input	These are input threshold voltage pins. They become user I/Os when an external threshold voltage is not needed (per bank).
Dedicated Pins:(1)		
CCLK	Input/Output	Configuration clock. Output in Master mode or Input in Slave mode.
PROG_B	Input	Active Low asynchronous reset to configuration logic. This pin has a permanent weak pull-up resistor.
DONE	Input/Output	DONE is a bidirectional signal with an optional internal pull-up resistor. As an output, this pin indicates completion of the configuration process. As an input, a Low level on DONE can be configured to delay the start-up sequence.
M2, M1, M0	Input	Configuration mode selection. Pin is biased by V_{CCAUX} (must be 2.5V). These pins should not connect to 3.3V unless 100Ω series resistors are used. The mode pins are not to be toggled (changed) while in operation during and after configuration.
HSWAP_EN	Input	Enable I/O pull-ups during configuration.
TCK	Input	Boundary Scan Clock. This pin is 3.3V compatible.
TDI	Input	Boundary Scan Data Input. This pin is 3.3V compatible.
TDO	Output (open-drain)	Boundary Scan Data Output. Pin is open-drain and can be pulled up to 3.3V. It is recommended that the external pull-up be greater than 200Ω. There is no internal pull-up.
TMS	Input	Boundary Scan Mode Select. This pin is 3.3V compatible.
PWRDWN_B	Input *(unsupported)*	Active Low power-down pin (unsupported). *Driving this pin Low can adversely affect device operation and configuration.* PWRDWN_B is internally pulled High, which is its default state. It does not require an external pull-up.
Other Pins:		
DXN, DXP	N/A	Temperature-sensing diode pins (Anode: DXP, Cathode: DXN).
V_{BATT}	Input	Decryptor key memory backup supply. (Connect to V_{CCAUX} or GND if battery not used.)
RSVD	N/A	Reserved pin - do not connect.
V_{CCO}	Input	Power-supply pins for the output drivers (per bank).
V_{CCAUX}	Input	Power-supply pins for auxiliary circuits.
V_{CCINT}	Input	Power-supply pins for the internal core logic.
GND	Input	Ground.
AVCCAUXRX#	Input	Analog power supply for receive circuitry of the RocketIO MGT (2.5V).
AVCCAUXTX#	Input	Analog power supply for transmit circuitry of the RocketIO MGT (2.5V).
BREFCLKN, BREFCLKP(2)	Input	Differential clock input that clocks the RocketIO X MGTs populating the same side of the chip (top or bottom). Can also drive DCMs for RocketIO X MGT use.

Table 4: **Virtex-II Pro Pin Definitions *(Continued)***

Pin Name	Direction	Description
VTRXPAD#	Input	Receive termination supply for the RocketIO multi-gigabit transceiver (1.8V - 2.8V).
VTTXPAD#	Input	Transmit termination supply for the RocketIO multi-gigabit transceiver (1.8V - 2.8V).
GNDA#	Input	Ground for the analog circuitry of the RocketIO multi-gigabit transceiver.
RXPPAD#	Input	Positive differential receive port of the RocketIO multi-gigabit transceiver.
RXNPAD#	Input	Negative differential receive port of the RocketIO multi-gigabit transceiver.
TXPPAD#	Output	Positive differential transmit port of the RocketIO multi-gigabit transceiver.
TXNPAD#	Output	Negative differential transmit port of the RocketIO multi-gigabit transceiver.

Notes:
1. All dedicated pins (JTAG and configuration) are powered by V_{CCAUX} (independent of the bank V_{CCO} voltage).
2. Virtex-II Pro X devices XC2VPX20 and XC2VPX70 only. Each BREFCLK(N/P) differential clock input pair takes the place of one regular Virtex-II Pro dual-function IO/GCLKx(S/P) pair on each side of the chip (top or bottom). For RocketIO BREFCLK, see section BREFCLK Pin Definitions (RocketIO Only) immediately following.

BREFCLK Pin Definitions (RocketIO Only)

These dedicated clocks use the same clock inputs for all packages:

Top	BREFCLK	P	GCLK4S	Bottom	BREFCLK	P	GCLK6P
		N	GCLK5P			N	GCLK7S
	BREFCLK2	P	GCLK2S		BREFCLK2	P	GCLK0P
		N	GCLK3P			N	GCLK1S

For detailed information about using BREFCLK/BREFCLK2, including routing considerations and pin numbers for all package types, refer to Chapter 2, "Digital Design Considerations," in the **RocketIO Transceiver User Guide**.

FG256/FGG256 Fine-Pitch BGA Package

As shown in Table 5, XC2VP2 and XC2VP4 Virtex-II Pro devices are available in the FG256/FGG256 fine-pitch BGA package. The pins in each of these devices are identical. Following this table are the FG256/FGG256 Fine-Pitch BGA Package Specifications (1.00mm pitch).

Table 5: **FG256/FGG256 — XC2VP2 and XC2VP4**

Bank	Pin Description	Pin Number
0	IO_L01N_0/VRP_0	C2
0	IO_L01P_0/VRN_0	C3
0	IO_L02N_0	B3
0	IO_L02P_0	C4
0	IO_L03N_0	A2
0	IO_L03P_0/VREF_0	A3
0	IO_L06N_0	D5
0	IO_L06P_0	C5
0	IO_L07P_0	D6
0	IO_L09N_0	E6
0	IO_L09P_0/VREF_0	E7
0	IO_L69N_0	D7
0	IO_L69P_0/VREF_0	C7
0	IO_L74N_0/GCLK7P	D8
0	IO_L74P_0/GCLK6S	C8
0	IO_L75N_0/GCLK5P	B8
0	IO_L75P_0/GCLK4S	A8
1	IO_L75N_1/GCLK3P	A9
1	IO_L75P_1/GCLK2S	B9
1	IO_L74N_1/GCLK1P	C9
1	IO_L74P_1/GCLK0S	D9
1	IO_L69N_1/VREF_1	C10
1	IO_L69P_1	D10
1	IO_L09N_1/VREF_1	E10
1	IO_L09P_1	E11
1	IO_L07N_1	D11
1	IO_L06N_1	C12
1	IO_L06P_1	D12
1	IO_L03N_1/VREF_1	A14
1	IO_L03P_1	A15

Table 5: **FG256/FGG256 — XC2VP2 and XC2VP4**

Bank	Pin Description	Pin Number
1	IO_L02N_1	C13
1	IO_L02P_1	B14
1	IO_L01N_1/VRP_1	C14
1	IO_L01P_1/VRN_1	C15
2	IO_L01N_2/VRP_2	E14
2	IO_L01P_2/VRN_2	E15
2	IO_L02N_2	E13
2	IO_L02P_2	F12
2	IO_L03N_2	F13
2	IO_L03P_2	F14
2	IO_L04N_2/VREF_2	F15
2	IO_L04P_2	F16
2	IO_L06N_2	G13
2	IO_L06P_2	G14
2	IO_L85N_2	G15
2	IO_L85P_2	G16
2	IO_L86N_2	G12
2	IO_L86P_2	H13
2	IO_L88N_2/VREF_2	H14
2	IO_L88P_2	H15
2	IO_L90N_2	H16
2	IO_L90P_2	J16
3	IO_L90N_3	J15
3	IO_L90P_3	J14
3	IO_L89N_3	J13
3	IO_L89P_3	K12
3	IO_L87N_3/VREF_3	K16
3	IO_L87P_3	K15
3	IO_L85N_3	K14
3	IO_L85P_3	K13
3	IO_L06N_3	L16
3	IO_L06P_3	L15
3	IO_L05N_3	L14

Table 5: **FG256/FGG256 — XC2VP2 and XC2VP4**

Bank	Pin Description	Pin Number
3	IO_L05P_3	L13
3	IO_L03N_3/VREF_3	L12
3	IO_L03P_3	M13
3	IO_L02N_3	M16
3	IO_L02P_3	N16
3	IO_L01N_3/VRP_3	M15
3	IO_L01P_3/VRN_3	M14
4	IO_L01N_4/BUSY/DOUT(1)	P15
4	IO_L01P_4/INIT_B	P14
4	IO_L02N_4/D0/DIN(1)	R14
4	IO_L02P_4/D1	P13
4	IO_L03N_4/D2	T15
4	IO_L03P_4/D3	T14
4	IO_L06N_4/VRP_4	N12
4	IO_L06P_4/VRN_4	P12
4	IO_L07P_4/VREF_4	N11
4	IO_L09N_4	M11
4	IO_L09P_4/VREF_4	M10
4	IO_L69N_4	N10
4	IO_L69P_4/VREF_4	P10
4	IO_L74N_4/GCLK3S	N9
4	IO_L74P_4/GCLK2P	P9
4	IO_L75N_4/GCLK1S	R9
4	IO_L75P_4/GCLK0P	T9
5	IO_L75N_5/GCLK7S	T8
5	IO_L75P_5/GCLK6P	R8
5	IO_L74N_5/GCLK5S	P8
5	IO_L74P_5/GCLK4P	N8
5	IO_L69N_5/VREF_5	P7
5	IO_L69P_5	N7
5	IO_L09N_5/VREF_5	M7
5	IO_L09P_5	M6
5	IO_L07N_5/VREF_5	N6

Table 5: **FG256/FGG256 — XC2VP2 and XC2VP4**

Bank	Pin Description	Pin Number
5	IO_L06N_5/VRP_5	P5
5	IO_L06P_5/VRN_5	N5
5	IO_L03N_5/D4	T3
5	IO_L03P_5/D5	T2
5	IO_L02N_5/D6	P4
5	IO_L02P_5/D7	R3
5	IO_L01N_5/RDWR_B	P3
5	IO_L01P_5/CS_B	P2
6	IO_L01P_6/VRN_6	M3
6	IO_L01N_6/VRP_6	M2
6	IO_L02P_6	N1
6	IO_L02N_6	M1
6	IO_L03P_6	M4
6	IO_L03N_6/VREF_6	L5
6	IO_L05P_6	L4
6	IO_L05N_6	L3
6	IO_L06P_6	L2
6	IO_L06N_6	L1
6	IO_L85P_6	K4
6	IO_L85N_6	K3
6	IO_L87P_6	K2
6	IO_L87N_6/VREF_6	K1
6	IO_L89P_6	K5
6	IO_L89N_6	J4
6	IO_L90P_6	J3
6	IO_L90N_6	J2
7	IO_L90P_7	J1
7	IO_L90N_7	H1
7	IO_L88P_7	H2
7	IO_L88N_7/VREF_7	H3
7	IO_L86P_7	H4
7	IO_L86N_7	G5
7	IO_L85P_7	G1

Table 5: **FG256/FGG256 — XC2VP2 and XC2VP4**

Bank	Pin Description	Pin Number
7	IO_L85N_7	G2
7	IO_L06P_7	G3
7	IO_L06N_7	G4
7	IO_L04P_7	F1
7	IO_L04N_7/VREF_7	F2
7	IO_L03P_7	F3
7	IO_L03N_7	F4
7	IO_L02P_7	F5
7	IO_L02N_7	E4
7	IO_L01P_7/VRN_7	E2
7	IO_L01N_7/VRP_7	E3
0	VCCO_0	F8
0	VCCO_0	F7
0	VCCO_0	E8
1	VCCO_1	F9
1	VCCO_1	F10
1	VCCO_1	E9
2	VCCO_2	H12
2	VCCO_2	H11
2	VCCO_2	G11
3	VCCO_3	K11
3	VCCO_3	J12
3	VCCO_3	J11
4	VCCO_4	M9
4	VCCO_4	L9
4	VCCO_4	L10
5	VCCO_5	M8
5	VCCO_5	L8
5	VCCO_5	L7
6	VCCO_6	K6
6	VCCO_6	J6
6	VCCO_6	J5
7	VCCO_7	H6
7	VCCO_7	H5

Table 5: **FG256/FGG256 — XC2VP2 and XC2VP4**

Bank	Pin Description	Pin Number
7	VCCO_7	G6
N/A	CCLK	N15
N/A	PROG_B	D1
N/A	DONE	P16
N/A	M0	N3
N/A	M1	N2
N/A	M2	P1
N/A	TCK	D16
N/A	TDI	E1
N/A	TDO	E16
N/A	TMS	C16
N/A	PWRDWN_B	N14
N/A	HSWAP_EN	C1
N/A	RSVD	D14
N/A	VBATT	D15
N/A	DXP	D2
N/A	DXN	D3
N/A	AVCCAUXTX6	B5
N/A	VTTXPAD6	B4
N/A	TXNPAD6	A4
N/A	TXPPAD6	A5
N/A	GNDA6	C6
N/A	RXPPAD6	A6
N/A	RXNPAD6	A7
N/A	VTRXPAD6	B6
N/A	AVCCAUXRX6	B7
N/A	AVCCAUXTX7	B11
N/A	VTTXPAD7	B10
N/A	TXNPAD7	A10
N/A	TXPPAD7	A11
N/A	GNDA7	C11
N/A	RXPPAD7	A12
N/A	RXNPAD7	A13
N/A	VTRXPAD7	B12

Table 5: **FG256/FGG256 — XC2VP2 and XC2VP4**

Bank	Pin Description	Pin Number
N/A	AVCCAUXRX7	B13
N/A	AVCCAUXRX18	R13
N/A	VTRXPAD18	R12
N/A	RXNPAD18	T13
N/A	RXPPAD18	T12
N/A	GNDA18	P11
N/A	TXPPAD18	T11
N/A	TXNPAD18	T10
N/A	VTTXPAD18	R10
N/A	AVCCAUXTX18	R11
N/A	AVCCAUXRX19	R7
N/A	VTRXPAD19	R6
N/A	RXNPAD19	T7
N/A	RXPPAD19	T6
N/A	GNDA19	P6
N/A	TXPPAD19	T5
N/A	TXNPAD19	T4
N/A	VTTXPAD19	R4
N/A	AVCCAUXTX19	R5
N/A	VCCINT	N4
N/A	VCCINT	N13
N/A	VCCINT	M5
N/A	VCCINT	M12
N/A	VCCINT	E5
N/A	VCCINT	E12
N/A	VCCINT	D4
N/A	VCCINT	D13
N/A	VCCAUX	R16
N/A	VCCAUX	R1
N/A	VCCAUX	B16
N/A	VCCAUX	B1
N/A	GND	T16
N/A	GND	T1
N/A	GND	R2

Table 5: **FG256/FGG256 — XC2VP2 and XC2VP4**

Bank	Pin Description	Pin Number
N/A	GND	R15
N/A	GND	L6
N/A	GND	L11
N/A	GND	K9
N/A	GND	K8
N/A	GND	K7
N/A	GND	K10
N/A	GND	J9
N/A	GND	J8
N/A	GND	J7
N/A	GND	J10
N/A	GND	H9
N/A	GND	H8
N/A	GND	H7
N/A	GND	H10
N/A	GND	G9
N/A	GND	G8
N/A	GND	G7
N/A	GND	G10
N/A	GND	F6
N/A	GND	F11
N/A	GND	B2
N/A	GND	B15
N/A	GND	A16
N/A	GND	A1

Notes:
1. See Table 4 for an explanation of the signals available on this pin.

FG256/FGG256 Fine-Pitch BGA Package Specifications (1.00mm pitch)

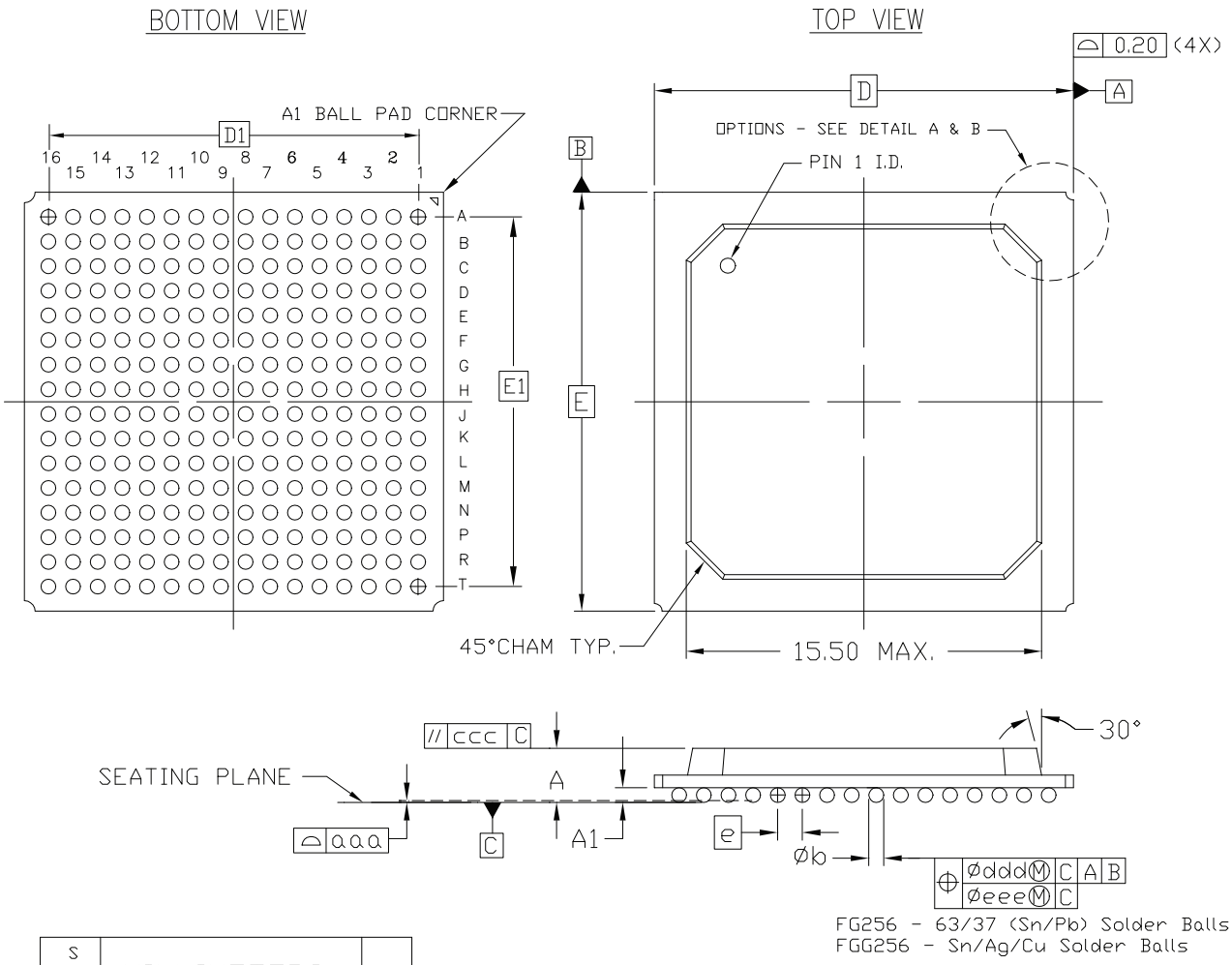

SYMBOL	MILLIMETERS			NOTE
	MIN.	NOM.	MAX.	
A			2.00	3
A_1	0.35	0.50	0.60	
D/E	17.00 BSC			
D_1/E_1	15.00 REF			
e	1.00 BSC			
øb	0.50	0.60	0.70	
aaa			0.20	
ccc			0.35	
ddd			0.30	
eee			0.10	
M	16			2

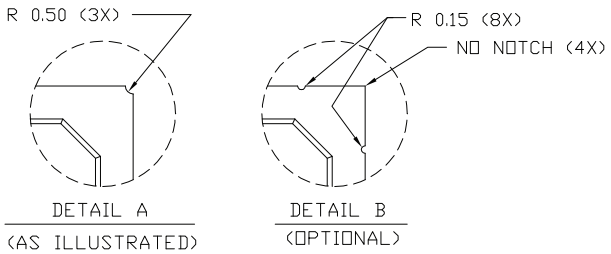

NOTES:

1. ALL DIMENSIONS AND TOLERANCES CONFORM TO ANSI Y14.5M–1994.
2. SYMBOL 'M' IS THE BALL MATRIX SIZE
3. NOMINAL DIMENSION IS TYPICALLY 1.60–1.73mm
4. CONFORMS TO JEDEC MS–034–AAF–1

Figure 1: **FG256/FGG256 Fine-Pitch BGA Package Specifications**

FG456/FGG456 Fine-Pitch BGA Package

As shown in Table 6, XC2VP2, XC2VP4, and XC2VP7 Virtex-II Pro devices are available in the FG456/FGG456 fine-pitch BGA package. The pins in these devices are same, except for the differences shown in the "No Connects" column. Following this table are the FG456/FGG456 Fine-Pitch BGA Package Specifications (1.00mm pitch).

Table 6: **FG456/FGG456 — XC2VP2, XC2VP4, and XC2VP7**

Bank	Pin Description	Pin Number	No Connects		
			XC2VP2	XC2VP4	XC2VP7
0	IO_L01N_0/VRP_0	D5			
0	IO_L01P_0/VRN_0	D6			
0	IO_L02N_0	E6			
0	IO_L02P_0	E7			
0	IO_L03N_0	D7			
0	IO_L03P_0/VREF_0	C7			
0	IO_L05_0/No_Pair	E8			
0	IO_L06N_0	D8			
0	IO_L06P_0	C8			
0	IO_L07N_0	F9			
0	IO_L07P_0	E9			
0	IO_L09N_0	D9			
0	IO_L09P_0/VREF_0	D10			
0	IO_L67N_0	F10			
0	IO_L67P_0	E10			
0	IO_L69N_0	C10			
0	IO_L69P_0/VREF_0	B11			
0	IO_L74N_0/GCLK7P	F11			
0	IO_L74P_0/GCLK6S	E11			
0	IO_L75N_0/GCLK5P	D11			
0	IO_L75P_0/GCLK4S	C11			
1	IO_L75N_1/GCLK3P	C12			
1	IO_L75P_1/GCLK2S	D12			
1	IO_L74N_1/GCLK1P	E12			
1	IO_L74P_1/GCLK0S	F12			
1	IO_L69N_1/VREF_1	B12			
1	IO_L69P_1	C13			
1	IO_L67N_1	E13			
1	IO_L67P_1	F13			
1	IO_L09N_1/VREF_1	D13			
1	IO_L09P_1	D14			
1	IO_L07N_1	E14			

Table 6: **FG456/FGG456 — XC2VP2, XC2VP4, and XC2VP7**

Bank	Pin Description	Pin Number	No Connects		
			XC2VP2	XC2VP4	XC2VP7
1	IO_L07P_1	F14			
1	IO_L06N_1	C15			
1	IO_L06P_1	D15			
1	IO_L05_1/No_Pair	E15			
1	IO_L03N_1/VREF_1	C16			
1	IO_L03P_1	D16			
1	IO_L02N_1	E16			
1	IO_L02P_1	E17			
1	IO_L01N_1/VRP_1	D17			
1	IO_L01P_1/VRN_1	D18			
2	IO_L01N_2/VRP_2	C21			
2	IO_L01P_2/VRN_2	C22			
2	IO_L02N_2	D21			
2	IO_L02P_2	D22			
2	IO_L03N_2	E19			
2	IO_L03P_2	E20			
2	IO_L04N_2/VREF_2	E21			
2	IO_L04P_2	E22			
2	IO_L06N_2	F19			
2	IO_L06P_2	F20			
2	IO_L43N_2	F21	NC		
2	IO_L43P_2	F22	NC		
2	IO_L46N_2/VREF_2	F18	NC		
2	IO_L46P_2	G18	NC		
2	IO_L48N_2	G19	NC		
2	IO_L48P_2	G20	NC		
2	IO_L49N_2	G21	NC		
2	IO_L49P_2	G22	NC		
2	IO_L50N_2	H19	NC		
2	IO_L50P_2	H20	NC		
2	IO_L52N_2/VREF_2	H21	NC		
2	IO_L52P_2	H22	NC		
2	IO_L54N_2	H18	NC		
2	IO_L54P_2	J17	NC		
2	IO_L55N_2	J19	NC		
2	IO_L55P_2	J20	NC		

Table 6: **FG456/FGG456 — XC2VP2, XC2VP4, and XC2VP7**

Bank	Pin Description	Pin Number	No Connects		
			XC2VP2	XC2VP4	XC2VP7
2	IO_L56N_2	J21	NC		
2	IO_L56P_2	J22	NC		
2	IO_L58N_2/VREF_2	J18	NC		
2	IO_L58P_2	K18	NC		
2	IO_L60N_2	K19	NC		
2	IO_L60P_2	K20	NC		
2	IO_L85N_2	K21			
2	IO_L85P_2	K22			
2	IO_L86N_2	K17			
2	IO_L86P_2	L17			
2	IO_L88N_2/VREF_2	L18			
2	IO_L88P_2	L19			
2	IO_L90N_2	L20			
2	IO_L90P_2	L21			
3	IO_L90N_3	M21			
3	IO_L90P_3	M20			
3	IO_L89N_3	M19			
3	IO_L89P_3	M18			
3	IO_L87N_3/VREF_3	M17			
3	IO_L87P_3	N17			
3	IO_L85N_3	N22			
3	IO_L85P_3	N21			
3	IO_L60N_3	N20	NC		
3	IO_L60P_3	N19	NC		
3	IO_L59N_3	N18	NC		
3	IO_L59P_3	P18	NC		
3	IO_L57N_3/VREF_3	P22	NC		
3	IO_L57P_3	P21	NC		
3	IO_L55N_3	P20	NC		
3	IO_L55P_3	P19	NC		
3	IO_L54N_3	P17	NC		
3	IO_L54P_3	R18	NC		
3	IO_L53N_3	R22	NC		
3	IO_L53P_3	R21	NC		
3	IO_L51N_3/VREF_3	R20	NC		
3	IO_L51P_3	R19	NC		

Table 6: **FG456/FGG456 — XC2VP2, XC2VP4, and XC2VP7**

Bank	Pin Description	Pin Number	No Connects		
			XC2VP2	XC2VP4	XC2VP7
3	IO_L49N_3	T22	NC		
3	IO_L49P_3	T21	NC		
3	IO_L48N_3	T20	NC		
3	IO_L48P_3	T19	NC		
3	IO_L47N_3	T18	NC		
3	IO_L47P_3	U18	NC		
3	IO_L45N_3/VREF_3	U22	NC		
3	IO_L45P_3	U21	NC		
3	IO_L43N_3	U20	NC		
3	IO_L43P_3	U19	NC		
3	IO_L06N_3	V22			
3	IO_L06P_3	V21			
3	IO_L05N_3	V20			
3	IO_L05P_3	V19			
3	IO_L03N_3/VREF_3	W22			
3	IO_L03P_3	W21			
3	IO_L02N_3	Y22			
3	IO_L02P_3	Y21			
3	IO_L01N_3/VRP_3	AA22			
3	IO_L01P_3/VRN_3	AB21			
4	IO_L01N_4/BUSY/DOUT(1)	W18			
4	IO_L01P_4/INIT_B	W17			
4	IO_L02N_4/D0/DIN(1)	V17			
4	IO_L02P_4/D1	V16			
4	IO_L03N_4/D2	W16			
4	IO_L03P_4/D3	Y16			
4	IO_L05_4/No_Pair	V15			
4	IO_L06N_4/VRP_4	W15			
4	IO_L06P_4/VRN_4	Y15			
4	IO_L07N_4	U14			
4	IO_L07P_4/VREF_4	V14			
4	IO_L09N_4	W14			
4	IO_L09P_4/VREF_4	W13			
4	IO_L67N_4	U13			
4	IO_L67P_4	V13			
4	IO_L69N_4	Y13			

Table 6: **FG456/FGG456 — XC2VP2, XC2VP4, and XC2VP7**

Bank	Pin Description	Pin Number	No Connects		
			XC2VP2	XC2VP4	XC2VP7
4	IO_L69P_4/VREF_4	AA12			
4	IO_L74N_4/GCLK3S	U12			
4	IO_L74P_4/GCLK2P	V12			
4	IO_L75N_4/GCLK1S	W12			
4	IO_L75P_4/GCLK0P	Y12			
5	IO_L75N_5/GCLK7S	Y11			
5	IO_L75P_5/GCLK6P	W11			
5	IO_L74N_5/GCLK5S	V11			
5	IO_L74P_5/GCLK4P	U11			
5	IO_L69N_5/VREF_5	AA11			
5	IO_L69P_5	Y10			
5	IO_L67N_5	V10			
5	IO_L67P_5	U10			
5	IO_L09N_5/VREF_5	W10			
5	IO_L09P_5	W9			
5	IO_L07N_5/VREF_5	V9			
5	IO_L07P_5	U9			
5	IO_L06N_5/VRP_5	Y8			
5	IO_L06P_5/VRN_5	W8			
5	IO_L05_5/No_Pair	V8			
5	IO_L03N_5/D4	Y7			
5	IO_L03P_5/D5	W7			
5	IO_L02N_5/D6	V7			
5	IO_L02P_5/D7	V6			
5	IO_L01N_5/RDWR_B	W6			
5	IO_L01P_5/CS_B	W5			
6	IO_L01P_6/VRN_6	AB2			
6	IO_L01N_6/VRP_6	AA1			
6	IO_L02P_6	Y2			
6	IO_L02N_6	Y1			
6	IO_L03P_6	W2			
6	IO_L03N_6/VREF_6	W1			
6	IO_L05P_6	V4			
6	IO_L05N_6	V3			
6	IO_L06P_6	V2			

Table 6: **FG456/FGG456 — XC2VP2, XC2VP4, and XC2VP7**

Bank	Pin Description	Pin Number	No Connects		
			XC2VP2	XC2VP4	XC2VP7
6	IO_L06N_6	V1			
6	IO_L43P_6	U4	NC		
6	IO_L43N_6	U3	NC		
6	IO_L45P_6	U2	NC		
6	IO_L45N_6/VREF_6	U1	NC		
6	IO_L47P_6	U5	NC		
6	IO_L47N_6	T5	NC		
6	IO_L48P_6	T4	NC		
6	IO_L48N_6	T3	NC		
6	IO_L49P_6	T2	NC		
6	IO_L49N_6	T1	NC		
6	IO_L51P_6	R4	NC		
6	IO_L51N_6/VREF_6	R3	NC		
6	IO_L53P_6	R2	NC		
6	IO_L53N_6	R1	NC		
6	IO_L54P_6	R5	NC		
6	IO_L54N_6	P6	NC		
6	IO_L55P_6	P4	NC		
6	IO_L55N_6	P3	NC		
6	IO_L57P_6	P2	NC		
6	IO_L57N_6/VREF_6	P1	NC		
6	IO_L59P_6	P5	NC		
6	IO_L59N_6	N5	NC		
6	IO_L60P_6	N4	NC		
6	IO_L60N_6	N3	NC		
6	IO_L85P_6	N2			
6	IO_L85N_6	N1			
6	IO_L87P_6	N6			
6	IO_L87N_6/VREF_6	M6			
6	IO_L89P_6	M5			
6	IO_L89N_6	M4			
6	IO_L90P_6	M3			
6	IO_L90N_6	M2			
7	IO_L90P_7	L2			
7	IO_L90N_7	L3			
7	IO_L88P_7	L4			

Table 6: **FG456/FGG456 — XC2VP2, XC2VP4, and XC2VP7**

Bank	Pin Description	Pin Number	No Connects		
			XC2VP2	XC2VP4	XC2VP7
7	IO_L88N_7/VREF_7	L5			
7	IO_L86P_7	L6			
7	IO_L86N_7	K6			
7	IO_L85P_7	K1			
7	IO_L85N_7	K2			
7	IO_L60P_7	K3	NC		
7	IO_L60N_7	K4	NC		
7	IO_L58P_7	K5	NC		
7	IO_L58N_7/VREF_7	J5	NC		
7	IO_L56P_7	J1	NC		
7	IO_L56N_7	J2	NC		
7	IO_L55P_7	J3	NC		
7	IO_L55N_7	J4	NC		
7	IO_L54P_7	J6	NC		
7	IO_L54N_7	H5	NC		
7	IO_L52P_7	H1	NC		
7	IO_L52N_7/VREF_7	H2	NC		
7	IO_L50P_7	H3	NC		
7	IO_L50N_7	H4	NC		
7	IO_L49P_7	G1	NC		
7	IO_L49N_7	G2	NC		
7	IO_L48P_7	G3	NC		
7	IO_L48N_7	G4	NC		
7	IO_L46P_7	G5	NC		
7	IO_L46N_7/VREF_7	F5	NC		
7	IO_L43P_7	F1	NC		
7	IO_L43N_7	F2	NC		
7	IO_L06P_7	F3			
7	IO_L06N_7	F4			
7	IO_L04P_7	E1			
7	IO_L04N_7/VREF_7	E2			
7	IO_L03P_7	E3			
7	IO_L03N_7	E4			
7	IO_L02P_7	D1			
7	IO_L02N_7	D2			
7	IO_L01P_7/VRN_7	C1			
7	IO_L01N_7/VRP_7	C2			

Table 6: **FG456/FGG456 — XC2VP2, XC2VP4, and XC2VP7**

Bank	Pin Description	Pin Number	No Connects		
			XC2VP2	XC2VP4	XC2VP7
0	VCCO_0	G9			
0	VCCO_0	G11			
0	VCCO_0	G10			
0	VCCO_0	F8			
0	VCCO_0	F7			
1	VCCO_1	G14			
1	VCCO_1	G13			
1	VCCO_1	G12			
1	VCCO_1	F16			
1	VCCO_1	F15			
2	VCCO_2	L16			
2	VCCO_2	K16			
2	VCCO_2	J16			
2	VCCO_2	H17			
2	VCCO_2	G17			
3	VCCO_3	T17			
3	VCCO_3	R17			
3	VCCO_3	P16			
3	VCCO_3	N16			
3	VCCO_3	M16			
4	VCCO_4	U16			
4	VCCO_4	U15			
4	VCCO_4	T14			
4	VCCO_4	T13			
4	VCCO_4	T12			
5	VCCO_5	U8			
5	VCCO_5	U7			
5	VCCO_5	T9			
5	VCCO_5	T11			
5	VCCO_5	T10			
6	VCCO_6	T6			
6	VCCO_6	R6			
6	VCCO_6	P7			
6	VCCO_6	N7			
6	VCCO_6	M7			
7	VCCO_7	L7			

Table 6: **FG456/FGG456 — XC2VP2, XC2VP4, and XC2VP7**

Bank	Pin Description	Pin Number	No Connects		
			XC2VP2	XC2VP4	XC2VP7
7	VCCO_7	K7			
7	VCCO_7	J7			
7	VCCO_7	H6			
7	VCCO_7	G6			
N/A	CCLK	W20			
N/A	PROG_B	B1			
N/A	DONE	Y18			
N/A	M0	Y4			
N/A	M1	W3			
N/A	M2	Y5			
N/A	TCK	B22			
N/A	TDI	D3			
N/A	TDO	D20			
N/A	TMS	A21			
N/A	PWRDWN_B	Y19			
N/A	HSWAP_EN	A2			
N/A	RSVD	C18			
N/A	VBATT	C19			
N/A	DXP	C4			
N/A	DXN	C5			
N/A	AVCCAUXTX4	B4	NC	NC	
N/A	VTTXPAD4	B3	NC	NC	
N/A	TXNPAD4	A3	NC	NC	
N/A	TXPPAD4	A4	NC	NC	
N/A	GNDA4	C6	NC	NC	
N/A	RXPPAD4	A5	NC	NC	
N/A	RXNPAD4	A6	NC	NC	
N/A	VTRXPAD4	B5	NC	NC	
N/A	AVCCAUXRX4	B6	NC	NC	
N/A	AVCCAUXTX6	B8			
N/A	VTTXPAD6	B7			
N/A	TXNPAD6	A7			
N/A	TXPPAD6	A8			
N/A	GNDA6	C9			
N/A	RXPPAD6	A9			
N/A	RXNPAD6	A10			

Table 6: **FG456/FGG456 — XC2VP2, XC2VP4, and XC2VP7**

Bank	Pin Description	Pin Number	No Connects		
			XC2VP2	XC2VP4	XC2VP7
N/A	VTRXPAD6	B9			
N/A	AVCCAUXRX6	B10			
N/A	AVCCAUXTX7	B14			
N/A	VTTXPAD7	B13			
N/A	TXNPAD7	A13			
N/A	TXPPAD7	A14			
N/A	GNDA7	C14			
N/A	RXPPAD7	A15			
N/A	RXNPAD7	A16			
N/A	VTRXPAD7	B15			
N/A	AVCCAUXRX7	B16			
N/A	AVCCAUXTX9	B18	NC	NC	
N/A	VTTXPAD9	B17	NC	NC	
N/A	TXNPAD9	A17	NC	NC	
N/A	TXPPAD9	A18	NC	NC	
N/A	GNDA9	C17	NC	NC	
N/A	RXPPAD9	A19	NC	NC	
N/A	RXNPAD9	A20	NC	NC	
N/A	VTRXPAD9	B19	NC	NC	
N/A	AVCCAUXRX9	B20	NC	NC	
N/A	AVCCAUXRX16	AA20	NC	NC	
N/A	VTRXPAD16	AA19	NC	NC	
N/A	RXNPAD16	AB20	NC	NC	
N/A	RXPPAD16	AB19	NC	NC	
N/A	GNDA16	Y17	NC	NC	
N/A	TXPPAD16	AB18	NC	NC	
N/A	TXNPAD16	AB17	NC	NC	
N/A	VTTXPAD16	AA17	NC	NC	
N/A	AVCCAUXTX16	AA18	NC	NC	
N/A	AVCCAUXRX18	AA16			
N/A	VTRXPAD18	AA15			
N/A	RXNPAD18	AB16			
N/A	RXPPAD18	AB15			
N/A	GNDA18	Y14			
N/A	TXPPAD18	AB14			
N/A	TXNPAD18	AB13			
N/A	VTTXPAD18	AA13			

Table 6: **FG456/FGG456 — XC2VP2, XC2VP4, and XC2VP7**

Bank	Pin Description	Pin Number	No Connects		
			XC2VP2	XC2VP4	XC2VP7
N/A	AVCCAUXTX18	AA14			
N/A	AVCCAUXRX19	AA10			
N/A	VTRXPAD19	AA9			
N/A	RXNPAD19	AB10			
N/A	RXPPAD19	AB9			
N/A	GNDA19	Y9			
N/A	TXPPAD19	AB8			
N/A	TXNPAD19	AB7			
N/A	VTTXPAD19	AA7			
N/A	AVCCAUXTX19	AA8			
N/A	AVCCAUXRX21	AA6	NC	NC	
N/A	VTRXPAD21	AA5	NC	NC	
N/A	RXNPAD21	AB6	NC	NC	
N/A	RXPPAD21	AB5	NC	NC	
N/A	GNDA21	Y6	NC	NC	
N/A	TXPPAD21	AB4	NC	NC	
N/A	TXNPAD21	AB3	NC	NC	
N/A	VTTXPAD21	AA3	NC	NC	
N/A	AVCCAUXTX21	AA4	NC	NC	
N/A	VCCINT	U6			
N/A	VCCINT	U17			
N/A	VCCINT	T8			
N/A	VCCINT	T7			
N/A	VCCINT	T16			
N/A	VCCINT	T15			
N/A	VCCINT	R7			
N/A	VCCINT	R16			
N/A	VCCINT	H7			
N/A	VCCINT	H16			
N/A	VCCINT	G8			
N/A	VCCINT	G7			
N/A	VCCINT	G16			
N/A	VCCINT	G15			
N/A	VCCINT	F6			
N/A	VCCINT	F17			
N/A	VCCAUX	M22			

Table 6: **FG456/FGG456 — XC2VP2, XC2VP4, and XC2VP7**

Bank	Pin Description	Pin Number	No Connects		
			XC2VP2	XC2VP4	XC2VP7
N/A	VCCAUX	L1			
N/A	VCCAUX	B21			
N/A	VCCAUX	B2			
N/A	VCCAUX	AB11			
N/A	VCCAUX	AA21			
N/A	VCCAUX	AA2			
N/A	VCCAUX	A12			
N/A	GND	Y3			
N/A	GND	Y20			
N/A	GND	W4			
N/A	GND	W19			
N/A	GND	V5			
N/A	GND	V18			
N/A	GND	P9			
N/A	GND	P14			
N/A	GND	P13			
N/A	GND	P12			
N/A	GND	P11			
N/A	GND	P10			
N/A	GND	N9			
N/A	GND	N14			
N/A	GND	N13			
N/A	GND	N12			
N/A	GND	N11			
N/A	GND	N10			
N/A	GND	M9			
N/A	GND	M14			
N/A	GND	M13			
N/A	GND	M12			
N/A	GND	M11			
N/A	GND	M10			
N/A	GND	M1			
N/A	GND	L9			
N/A	GND	L22			
N/A	GND	L14			
N/A	GND	L13			
N/A	GND	L12			

Table 6: **FG456/FGG456 — XC2VP2, XC2VP4, and XC2VP7**

Bank	Pin Description	Pin Number	No Connects		
			XC2VP2	XC2VP4	XC2VP7
N/A	GND	L11			
N/A	GND	L10			
N/A	GND	K9			
N/A	GND	K14			
N/A	GND	K13			
N/A	GND	K12			
N/A	GND	K11			
N/A	GND	K10			
N/A	GND	J9			
N/A	GND	J14			
N/A	GND	J13			
N/A	GND	J12			
N/A	GND	J11			
N/A	GND	J10			
N/A	GND	E5			
N/A	GND	E18			
N/A	GND	D4			
N/A	GND	D19			
N/A	GND	C3			
N/A	GND	C20			
N/A	GND	AB22			
N/A	GND	AB12			
N/A	GND	AB1			
N/A	GND	A22			
N/A	GND	A11			
N/A	GND	A1			

Notes:
1. See Table 4 for an explanation of the signals available on this pin.

FG456/FGG456 Fine-Pitch BGA Package Specifications (1.00mm pitch)

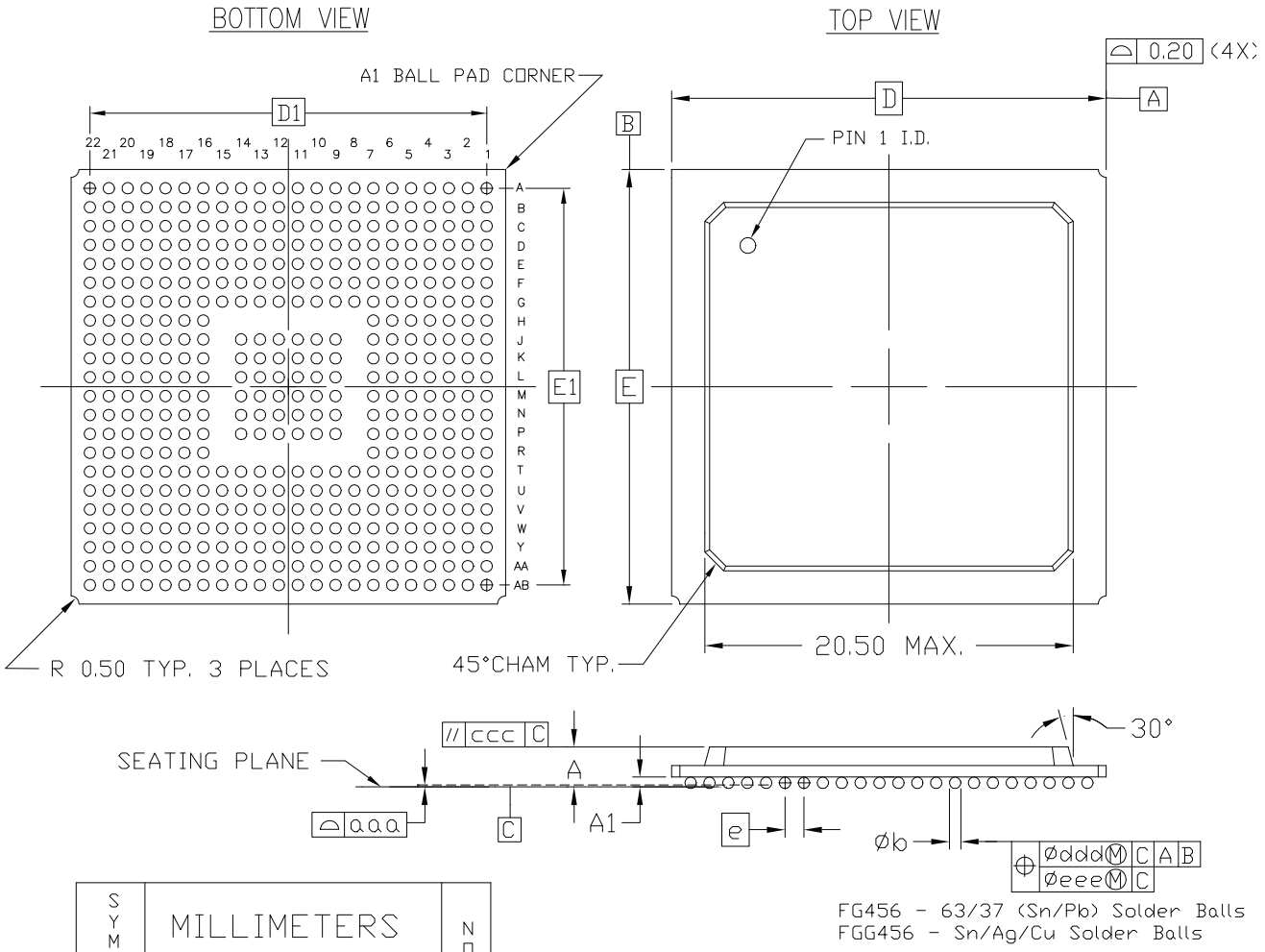

SYMBOL	MILLIMETERS			NOTE
	MIN.	NOM.	MAX.	
A			2.60	3
A_1	0.35	0.50	0.60	
D/E	23.00 BSC			
D_1/E_1	21.00 REF			
e	1.00 BSC			
øb	0.50	0.60	0.70	
aaa			0.20	
ccc			0.35	
ddd			0.30	
eee			0.10	
M	22			2

NOTES:

1. ALL DIMENSIONS AND TOLERANCES CONFORM TO ANSI Y14.5M-1994
2. SYMBOL 'M' IS THE BALL MATRIX SIZE.
3. NOMINAL 'A' DIMENSION IS TYPICALLY 2.20mm.
4. CONFORMS TO JEDEC MS-034-AAJ-1 (DEPOPULATED)

Figure 2: **FG456/FGG456 Fine-Pitch BGA Package Specifications**

FG676/FGG676 Fine-Pitch BGA Package

As shown in Table 7, XC2VP20, XC2VP30, and XC2VP40 Virtex-II Pro devices are available in the FG676/FGG676 fine-pitch BGA package. The pins in these devices are the same, except for the differences shown in the "No Connects" column. Following this table are the FG676/FGG676 Fine-Pitch BGA Package Specifications (1.00mm pitch).

Table 7: **FG676/FGG676 — XC2VP20, XC2VP30, and XC2VP40**

Bank	Pin Description	Pin Number	No Connects		
			XC2VP20	XC2VP30	XC2VP40
0	IO_L01N_0/VRP_0	E5			
0	IO_L01P_0/VRN_0	D5			
0	IO_L02N_0	E6			
0	IO_L02P_0	D6			
0	IO_L03N_0	G7			
0	IO_L03P_0/VREF_0	F7			
0	IO_L05_0/No_Pair	E7			
0	IO_L06N_0	D7			
0	IO_L06P_0	C7			
0	IO_L07N_0	H8			
0	IO_L07P_0	G8			
0	IO_L09N_0	F8			
0	IO_L09P_0/VREF_0	E8			
0	IO_L37N_0	B8			
0	IO_L37P_0	A8			
0	IO_L39N_0	H9			
0	IO_L39P_0	G9			
0	IO_L43N_0	F9			
0	IO_L43P_0	E9			
0	IO_L45N_0	D9			
0	IO_L45P_0/VREF_0	C9			
0	IO_L46N_0	H10			
0	IO_L46P_0	H11			
0	IO_L48N_0	E10			
0	IO_L48P_0	E11			
0	IO_L49N_0	D10			
0	IO_L49P_0	C10			
0	IO_L50_0/No_Pair	G11			
0	IO_L53_0/No_Pair	F11			
0	IO_L54N_0	J12			
0	IO_L54P_0	H12			

Table 7: **FG676/FGG676 — XC2VP20, XC2VP30, and XC2VP40**

Bank	Pin Description	Pin Number	No Connects		
			XC2VP20	XC2VP30	XC2VP40
0	IO_L55N_0	G12			
0	IO_L55P_0	F12			
0	IO_L57N_0	E12			
0	IO_L57P_0/VREF_0	F13			
0	IO_L67N_0	D12			
0	IO_L67P_0	C12			
0	IO_L69N_0	J13			
0	IO_L69P_0/VREF_0	H13			
0	IO_L74N_0/GCLK7P	E13			
0	IO_L74P_0/GCLK6S	D13			
0	IO_L75N_0/GCLK5P	C13			
0	IO_L75P_0/GCLK4S	B13			
1	IO_L75N_1/GCLK3P	B14			
1	IO_L75P_1/GCLK2S	C14			
1	IO_L74N_1/GCLK1P	D14			
1	IO_L74P_1/GCLK0S	E14			
1	IO_L69N_1/VREF_1	H14			
1	IO_L69P_1	J14			
1	IO_L67N_1	C15			
1	IO_L67P_1	D15			
1	IO_L57N_1/VREF_1	F14			
1	IO_L57P_1	E15			
1	IO_L55N_1	F15			
1	IO_L55P_1	G15			
1	IO_L54N_1	H15			
1	IO_L54P_1	J15			
1	IO_L53_1/No_Pair	F16			
1	IO_L50_1/No_Pair	G16			
1	IO_L49N_1	C17			
1	IO_L49P_1	D17			
1	IO_L48N_1	E16			
1	IO_L48P_1	E17			
1	IO_L46N_1	H16			
1	IO_L46P_1	H17			

Table 7: **FG676/FGG676 — XC2VP20, XC2VP30, and XC2VP40**

Bank	Pin Description	Pin Number	No Connects		
			XC2VP20	XC2VP30	XC2VP40
1	IO_L45N_1/VREF_1	C18			
1	IO_L45P_1	D18			
1	IO_L43N_1	E18			
1	IO_L43P_1	F18			
1	IO_L39N_1	G18			
1	IO_L39P_1	H18			
1	IO_L37N_1	A19			
1	IO_L37P_1	B19			
1	IO_L09N_1/VREF_1	E19			
1	IO_L09P_1	F19			
1	IO_L07N_1	G19			
1	IO_L07P_1	H19			
1	IO_L06N_1	C20			
1	IO_L06P_1	D20			
1	IO_L05_1/No_Pair	E20			
1	IO_L03N_1/VREF_1	F20			
1	IO_L03P_1	G20			
1	IO_L02N_1	D21			
1	IO_L02P_1	E21			
1	IO_L01N_1/VRP_1	D22			
1	IO_L01P_1/VRN_1	E22			
2	IO_L01N_2/VRP_2	C25			
2	IO_L01P_2/VRN_2	C26			
2	IO_L02N_2	D25			
2	IO_L02P_2	D26			
2	IO_L03N_2	E23			
2	IO_L03P_2	F22			
2	IO_L04N_2/VREF_2	E25			
2	IO_L04P_2	E26			
2	IO_L06N_2	F21			
2	IO_L06P_2	G21			
2	IO_L24N_2	F23	NC		
2	IO_L24P_2	F24	NC		
2	IO_L31N_2	F25			

Table 7: **FG676/FGG676 — XC2VP20, XC2VP30, and XC2VP40**

Bank	Pin Description	Pin Number	No Connects		
			XC2VP20	XC2VP30	XC2VP40
2	IO_L31P_2	F26			
2	IO_L32N_2	G22			
2	IO_L32P_2	H22			
2	IO_L34N_2/VREF_2	G23			
2	IO_L34P_2	G24			
2	IO_L36N_2	G25			
2	IO_L36P_2	G26			
2	IO_L37N_2	H20			
2	IO_L37P_2	H21			
2	IO_L38N_2	H25			
2	IO_L38P_2	H26			
2	IO_L40N_2/VREF_2	J19			
2	IO_L40P_2	J20			
2	IO_L42N_2	J21			
2	IO_L42P_2	J22			
2	IO_L43N_2	J23			
2	IO_L43P_2	J24			
2	IO_L44N_2	J25			
2	IO_L44P_2	J26			
2	IO_L46N_2/VREF_2	K19			
2	IO_L46P_2	L19			
2	IO_L48N_2	K22			
2	IO_L48P_2	K23			
2	IO_L49N_2	K24			
2	IO_L49P_2	L24			
2	IO_L50N_2	K25			
2	IO_L50P_2	K26			
2	IO_L52N_2/VREF_2	L20			
2	IO_L52P_2	M20			
2	IO_L54N_2	L21			
2	IO_L54P_2	L22			
2	IO_L55N_2	L25			
2	IO_L55P_2	L26			
2	IO_L56N_2	M18			
2	IO_L56P_2	M19			

Table 7: **FG676/FGG676 — XC2VP20, XC2VP30, and XC2VP40**

Bank	Pin Description	Pin Number	No Connects		
			XC2VP20	XC2VP30	XC2VP40
2	IO_L58N_2/VREF_2	M21			
2	IO_L58P_2	N21			
2	IO_L60N_2	M22			
2	IO_L60P_2	M23			
2	IO_L85N_2	M25			
2	IO_L85P_2	M26			
2	IO_L86N_2	N18			
2	IO_L86P_2	N19			
2	IO_L88N_2/VREF_2	N22			
2	IO_L88P_2	N23			
2	IO_L90N_2	N24			
2	IO_L90P_2	N25			
3	IO_L90N_3	P25			
3	IO_L90P_3	P24			
3	IO_L89N_3	P23			
3	IO_L89P_3	P22			
3	IO_L87N_3/VREF_3	P19			
3	IO_L87P_3	P18			
3	IO_L85N_3	R26			
3	IO_L85P_3	R25			
3	IO_L60N_3	R23			
3	IO_L60P_3	R22			
3	IO_L59N_3	P21			
3	IO_L59P_3	R21			
3	IO_L57N_3/VREF_3	R19			
3	IO_L57P_3	R18			
3	IO_L55N_3	T26			
3	IO_L55P_3	T25			
3	IO_L54N_3	T22			
3	IO_L54P_3	T21			
3	IO_L53N_3	R20			
3	IO_L53P_3	T20			
3	IO_L51N_3/VREF_3	U26			
3	IO_L51P_3	U25			

Table 7: **FG676/FGG676 — XC2VP20, XC2VP30, and XC2VP40**

Bank	Pin Description	Pin Number	No Connects		
			XC2VP20	XC2VP30	XC2VP40
3	IO_L49N_3	T24			
3	IO_L49P_3	U24			
3	IO_L48N_3	U23			
3	IO_L48P_3	U22			
3	IO_L47N_3	T19			
3	IO_L47P_3	U19			
3	IO_L45N_3/VREF_3	V26			
3	IO_L45P_3	V25			
3	IO_L43N_3	V24			
3	IO_L43P_3	V23			
3	IO_L42N_3	V22			
3	IO_L42P_3	V21			
3	IO_L41N_3	V20			
3	IO_L41P_3	V19			
3	IO_L39N_3/VREF_3	W26			
3	IO_L39P_3	W25			
3	IO_L37N_3	W21			
3	IO_L37P_3	W20			
3	IO_L36N_3	Y26			
3	IO_L36P_3	Y25			
3	IO_L35N_3	Y24			
3	IO_L35P_3	Y23			
3	IO_L33N_3/VREF_3	W22			
3	IO_L33P_3	Y22			
3	IO_L31N_3	AA26			
3	IO_L31P_3	AA25			
3	IO_L24N_3	AA24	NC		
3	IO_L24P_3	AA23	NC		
3	IO_L23N_3	Y21	NC		
3	IO_L23P_3	AA21	NC		
3	IO_L06N_3	AB26			
3	IO_L06P_3	AB25			
3	IO_L05N_3	AA22			
3	IO_L05P_3	AB23			
3	IO_L03N_3/VREF_3	AC26			

Table 7: **FG676/FGG676 — XC2VP20, XC2VP30, and XC2VP40**

Bank	Pin Description	Pin Number	No Connects		
			XC2VP20	XC2VP30	XC2VP40
3	IO_L03P_3	AC25			
3	IO_L02N_3	AC24			
3	IO_L02P_3	AD25			
3	IO_L01N_3/VRP_3	AD26			
3	IO_L01P_3/VRN_3	AE26			
4	IO_L01N_4/BUSY/DOUT(1)	AB22			
4	IO_L01P_4/INIT_B	AC22			
4	IO_L02N_4/D0/DIN(1)	AB21			
4	IO_L02P_4/D1	AC21			
4	IO_L03N_4/D2	Y20			
4	IO_L03P_4/D3	AA20			
4	IO_L05_4/No_Pair	AB20			
4	IO_L06N_4/VRP_4	AC20			
4	IO_L06P_4/VRN_4	AD20			
4	IO_L07N_4	W19			
4	IO_L07P_4/VREF_4	Y19			
4	IO_L09N_4	AA19			
4	IO_L09P_4/VREF_4	AB19			
4	IO_L37N_4	AE19			
4	IO_L37P_4	AF19			
4	IO_L39N_4	W18			
4	IO_L39P_4	Y18			
4	IO_L43N_4	AA18			
4	IO_L43P_4	AB18			
4	IO_L45N_4	AC18			
4	IO_L45P_4/VREF_4	AD18			
4	IO_L46N_4	W17			
4	IO_L46P_4	W16			
4	IO_L48N_4	AB17			
4	IO_L48P_4	AB16			
4	IO_L49N_4	AC17			
4	IO_L49P_4	AD17			
4	IO_L50_4/No_Pair	Y16			
4	IO_L53_4/No_Pair	AA16			

Table 7: **FG676/FGG676 — XC2VP20, XC2VP30, and XC2VP40**

Bank	Pin Description	Pin Number	No Connects		
			XC2VP20	XC2VP30	XC2VP40
4	IO_L54N_4	V15			
4	IO_L54P_4	W15			
4	IO_L55N_4	Y15			
4	IO_L55P_4	AA15			
4	IO_L57N_4	AB15			
4	IO_L57P_4/VREF_4	AA14			
4	IO_L67N_4	AC15			
4	IO_L67P_4	AD15			
4	IO_L69N_4	V14			
4	IO_L69P_4/VREF_4	W14			
4	IO_L74N_4/GCLK3S	AB14			
4	IO_L74P_4/GCLK2P	AC14			
4	IO_L75N_4/GCLK1S	AD14			
4	IO_L75P_4/GCLK0P	AE14			
5	IO_L75N_5/GCLK7S	AE13			
5	IO_L75P_5/GCLK6P	AD13			
5	IO_L74N_5/GCLK5S	AC13			
5	IO_L74P_5/GCLK4P	AB13			
5	IO_L69N_5/VREF_5	W13			
5	IO_L69P_5	V13			
5	IO_L67N_5	AD12			
5	IO_L67P_5	AC12			
5	IO_L57N_5/VREF_5	AA13			
5	IO_L57P_5	AB12			
5	IO_L55N_5	AA12			
5	IO_L55P_5	Y12			
5	IO_L54N_5	W12			
5	IO_L54P_5	V12			
5	IO_L53_5/No_Pair	AA11			
5	IO_L50_5/No_Pair	Y11			
5	IO_L49N_5	AD10			
5	IO_L49P_5	AC10			
5	IO_L48N_5	AB11			
5	IO_L48P_5	AB10			

Table 7: **FG676/FGG676 — XC2VP20, XC2VP30, and XC2VP40**

Bank	Pin Description	Pin Number	No Connects		
			XC2VP20	XC2VP30	XC2VP40
5	IO_L46N_5	W11			
5	IO_L46P_5	W10			
5	IO_L45N_5/VREF_5	AD9			
5	IO_L45P_5	AC9			
5	IO_L43N_5	AB9			
5	IO_L43P_5	AA9			
5	IO_L39N_5	Y9			
5	IO_L39P_5	W9			
5	IO_L37N_5	AF8			
5	IO_L37P_5	AE8			
5	IO_L09N_5/VREF_5	AB8			
5	IO_L09P_5	AA8			
5	IO_L07N_5/VREF_5	Y8			
5	IO_L07P_5	W8			
5	IO_L06N_5/VRP_5	AD7			
5	IO_L06P_5/VRN_5	AC7			
5	IO_L05_5/No_Pair	AB7			
5	IO_L03N_5/D4	AA7			
5	IO_L03P_5/D5	Y7			
5	IO_L02N_5/D6	AC6			
5	IO_L02P_5/D7	AB6			
5	IO_L01N_5/RDWR_B	AC5			
5	IO_L01P_5/CS_B	AB5			
6	IO_L01P_6/VRN_6	AE1			
6	IO_L01N_6/VRP_6	AD1			
6	IO_L02P_6	AD2			
6	IO_L02N_6	AC3			
6	IO_L03P_6	AC2			
6	IO_L03N_6/VREF_6	AC1			
6	IO_L05P_6	AB4			
6	IO_L05N_6	AA5			
6	IO_L06P_6	AB2			
6	IO_L06N_6	AB1			
6	IO_L23P_6	AA6	NC		

Table 7: **FG676/FGG676 — XC2VP20, XC2VP30, and XC2VP40**

Bank	Pin Description	Pin Number	No Connects		
			XC2VP20	XC2VP30	XC2VP40
6	IO_L23N_6	Y6	NC		
6	IO_L24P_6	AA4	NC		
6	IO_L24N_6	AA3	NC		
6	IO_L31P_6	AA2			
6	IO_L31N_6	AA1			
6	IO_L33P_6	Y5			
6	IO_L33N_6/VREF_6	W5			
6	IO_L35P_6	Y4			
6	IO_L35N_6	Y3			
6	IO_L36P_6	Y2			
6	IO_L36N_6	Y1			
6	IO_L37P_6	W7			
6	IO_L37N_6	W6			
6	IO_L39P_6	W2			
6	IO_L39N_6/VREF_6	W1			
6	IO_L41P_6	V8			
6	IO_L41N_6	V7			
6	IO_L42P_6	V6			
6	IO_L42N_6	V5			
6	IO_L43P_6	V4			
6	IO_L43N_6	V3			
6	IO_L45P_6	V2			
6	IO_L45N_6/VREF_6	V1			
6	IO_L47P_6	U8			
6	IO_L47N_6	T8			
6	IO_L48P_6	U5			
6	IO_L48N_6	U4			
6	IO_L49P_6	U3			
6	IO_L49N_6	T3			
6	IO_L51P_6	U2			
6	IO_L51N_6/VREF_6	U1			
6	IO_L53P_6	T7			
6	IO_L53N_6	R7			
6	IO_L54P_6	T6			
6	IO_L54N_6	T5			

Table 7: **FG676/FGG676 — XC2VP20, XC2VP30, and XC2VP40**

Bank	Pin Description	Pin Number	No Connects		
			XC2VP20	XC2VP30	XC2VP40
6	IO_L55P_6	T2			
6	IO_L55N_6	T1			
6	IO_L57P_6	R9			
6	IO_L57N_6/VREF_6	R8			
6	IO_L59P_6	R6			
6	IO_L59N_6	P6			
6	IO_L60P_6	R5			
6	IO_L60N_6	R4			
6	IO_L85P_6	R2			
6	IO_L85N_6	R1			
6	IO_L87P_6	P9			
6	IO_L87N_6/VREF_6	P8			
6	IO_L89P_6	P5			
6	IO_L89N_6	P4			
6	IO_L90P_6	P3			
6	IO_L90N_6	P2			
7	IO_L90P_7	N2			
7	IO_L90N_7	N3			
7	IO_L88P_7	N4			
7	IO_L88N_7/VREF_7	N5			
7	IO_L86P_7	N8			
7	IO_L86N_7	N9			
7	IO_L85P_7	M1			
7	IO_L85N_7	M2			
7	IO_L60P_7	M4			
7	IO_L60N_7	M5			
7	IO_L58P_7	N6			
7	IO_L58N_7/VREF_7	M6			
7	IO_L56P_7	M8			
7	IO_L56N_7	M9			
7	IO_L55P_7	L1			
7	IO_L55N_7	L2			
7	IO_L54P_7	L5			
7	IO_L54N_7	L6			

Table 7: **FG676/FGG676 — XC2VP20, XC2VP30, and XC2VP40**

Bank	Pin Description	Pin Number	No Connects		
			XC2VP20	XC2VP30	XC2VP40
7	IO_L52P_7	M7			
7	IO_L52N_7/VREF_7	L7			
7	IO_L50P_7	K1			
7	IO_L50N_7	K2			
7	IO_L49P_7	L3			
7	IO_L49N_7	K3			
7	IO_L48P_7	K4			
7	IO_L48N_7	K5			
7	IO_L46P_7	L8			
7	IO_L46N_7/VREF_7	K8			
7	IO_L44P_7	J1			
7	IO_L44N_7	J2			
7	IO_L43P_7	J3			
7	IO_L43N_7	J4			
7	IO_L42P_7	J5			
7	IO_L42N_7	J6			
7	IO_L40P_7	J7			
7	IO_L40N_7/VREF_7	J8			
7	IO_L38P_7	H1			
7	IO_L38N_7	H2			
7	IO_L37P_7	H6			
7	IO_L37N_7	H7			
7	IO_L36P_7	G1			
7	IO_L36N_7	G2			
7	IO_L34P_7	G3			
7	IO_L34N_7/VREF_7	G4			
7	IO_L32P_7	H5			
7	IO_L32N_7	G5			
7	IO_L31P_7	F1			
7	IO_L31N_7	F2			
7	IO_L24P_7	F3	NC		
7	IO_L24N_7	F4	NC		
7	IO_L06P_7	G6			
7	IO_L06N_7	F6			
7	IO_L04P_7	E1			

Table 7: **FG676/FGG676 — XC2VP20, XC2VP30, and XC2VP40**

Bank	Pin Description	Pin Number	No Connects		
			XC2VP20	XC2VP30	XC2VP40
7	IO_L04N_7/VREF_7	E2			
7	IO_L03P_7	F5			
7	IO_L03N_7	E4			
7	IO_L02P_7	D1			
7	IO_L02N_7	D2			
7	IO_L01P_7/VRN_7	C1			
7	IO_L01N_7/VRP_7	C2			
0	VCCO_0	C5			
0	VCCO_0	C8			
0	VCCO_0	D11			
0	VCCO_0	J10			
0	VCCO_0	J11			
0	VCCO_0	K12			
0	VCCO_0	K13			
1	VCCO_1	C19			
1	VCCO_1	C22			
1	VCCO_1	D16			
1	VCCO_1	J16			
1	VCCO_1	J17			
1	VCCO_1	K14			
1	VCCO_1	K15			
2	VCCO_2	E24			
2	VCCO_2	H24			
2	VCCO_2	K18			
2	VCCO_2	L18			
2	VCCO_2	L23			
2	VCCO_2	M17			
2	VCCO_2	N17			
3	VCCO_3	P17			
3	VCCO_3	R17			
3	VCCO_3	T18			
3	VCCO_3	T23			
3	VCCO_3	U18			
3	VCCO_3	W24			

Table 7: **FG676/FGG676 — XC2VP20, XC2VP30, and XC2VP40**

Bank	Pin Description	Pin Number	No Connects		
			XC2VP20	XC2VP30	XC2VP40
3	VCCO_3	AB24			
4	VCCO_4	U14			
4	VCCO_4	U15			
4	VCCO_4	V16			
4	VCCO_4	V17			
4	VCCO_4	AC16			
4	VCCO_4	AD19			
4	VCCO_4	AD22			
5	VCCO_5	U12			
5	VCCO_5	U13			
5	VCCO_5	V10			
5	VCCO_5	V11			
5	VCCO_5	AC11			
5	VCCO_5	AD5			
5	VCCO_5	AD8			
6	VCCO_6	P10			
6	VCCO_6	R10			
6	VCCO_6	T4			
6	VCCO_6	T9			
6	VCCO_6	U9			
6	VCCO_6	W3			
6	VCCO_6	AB3			
7	VCCO_7	E3			
7	VCCO_7	H3			
7	VCCO_7	K9			
7	VCCO_7	L4			
7	VCCO_7	L9			
7	VCCO_7	M10			
7	VCCO_7	N10			
N/A	PROG_B	B1			
N/A	HSWAP_EN	B3			
N/A	DXP	A3			
N/A	DXN	C4			
N/A	AVCCAUXTX4	B5			

Table 7: **FG676/FGG676 — XC2VP20, XC2VP30, and XC2VP40**

Bank	Pin Description	Pin Number	No Connects		
			XC2VP20	XC2VP30	XC2VP40
N/A	VTTXPAD4	B4			
N/A	TXNPAD4	A4			
N/A	TXPPAD4	A5			
N/A	GNDA4	C6			
N/A	RXPPAD4	A6			
N/A	RXNPAD4	A7			
N/A	VTRXPAD4	B6			
N/A	AVCCAUXRX4	B7			
N/A	AVCCAUXTX6	B10			
N/A	VTTXPAD6	B9			
N/A	TXNPAD6	A9			
N/A	TXPPAD6	A10			
N/A	GNDA6	C11			
N/A	RXPPAD6	A11			
N/A	RXNPAD6	A12			
N/A	VTRXPAD6	B11			
N/A	AVCCAUXRX6	B12			
N/A	AVCCAUXTX7	B16			
N/A	VTTXPAD7	B15			
N/A	TXNPAD7	A15			
N/A	TXPPAD7	A16			
N/A	GNDA7	C16			
N/A	RXPPAD7	A17			
N/A	RXNPAD7	A18			
N/A	VTRXPAD7	B17			
N/A	AVCCAUXRX7	B18			
N/A	AVCCAUXTX9	B21			
N/A	VTTXPAD9	B20			
N/A	TXNPAD9	A20			
N/A	TXPPAD9	A21			
N/A	GNDA9	C21			
N/A	RXPPAD9	A22			
N/A	RXNPAD9	A23			
N/A	VTRXPAD9	B22			
N/A	AVCCAUXRX9	B23			

Table 7: **FG676/FGG676 — XC2VP20, XC2VP30, and XC2VP40**

Bank	Pin Description	Pin Number	No Connects		
			XC2VP20	XC2VP30	XC2VP40
N/A	RSVD	C23			
N/A	VBATT	A24			
N/A	TMS	B24			
N/A	TCK	B26			
N/A	TDO	D24			
N/A	CCLK	AE24			
N/A	PWRDWN_B	AF24			
N/A	DONE	AD23			
N/A	AVCCAUXRX16	AE23			
N/A	VTRXPAD16	AE22			
N/A	RXNPAD16	AF23			
N/A	RXPPAD16	AF22			
N/A	GNDA16	AD21			
N/A	TXPPAD16	AF21			
N/A	TXNPAD16	AF20			
N/A	VTTXPAD16	AE20			
N/A	AVCCAUXTX16	AE21			
N/A	AVCCAUXRX18	AE18			
N/A	VTRXPAD18	AE17			
N/A	RXNPAD18	AF18			
N/A	RXPPAD18	AF17			
N/A	GNDA18	AD16			
N/A	TXPPAD18	AF16			
N/A	TXNPAD18	AF15			
N/A	VTTXPAD18	AE15			
N/A	AVCCAUXTX18	AE16			
N/A	AVCCAUXRX19	AE12			
N/A	VTRXPAD19	AE11			
N/A	RXNPAD19	AF12			
N/A	RXPPAD19	AF11			
N/A	GNDA19	AD11			
N/A	TXPPAD19	AF10			
N/A	TXNPAD19	AF9			
N/A	VTTXPAD19	AE9			
N/A	AVCCAUXTX19	AE10			

Table 7: **FG676/FGG676 — XC2VP20, XC2VP30, and XC2VP40**

Bank	Pin Description	Pin Number	No Connects		
			XC2VP20	XC2VP30	XC2VP40
N/A	AVCCAUXRX21	AE7			
N/A	VTRXPAD21	AE6			
N/A	RXNPAD21	AF7			
N/A	RXPPAD21	AF6			
N/A	GNDA21	AD6			
N/A	TXPPAD21	AF5			
N/A	TXNPAD21	AF4			
N/A	VTTXPAD21	AE4			
N/A	AVCCAUXTX21	AE5			
N/A	M2	AD4			
N/A	M0	AF3			
N/A	M1	AE3			
N/A	TDI	D3			
N/A	VCCINT	G10			
N/A	VCCINT	G13			
N/A	VCCINT	G14			
N/A	VCCINT	G17			
N/A	VCCINT	J9			
N/A	VCCINT	J18			
N/A	VCCINT	K7			
N/A	VCCINT	K10			
N/A	VCCINT	K11			
N/A	VCCINT	K16			
N/A	VCCINT	K17			
N/A	VCCINT	K20			
N/A	VCCINT	L10			
N/A	VCCINT	L17			
N/A	VCCINT	N7			
N/A	VCCINT	N20			
N/A	VCCINT	P7			
N/A	VCCINT	P20			
N/A	VCCINT	T10			
N/A	VCCINT	T17			
N/A	VCCINT	U7			

Table 7: **FG676/FGG676 — XC2VP20, XC2VP30, and XC2VP40**

Bank	Pin Description	Pin Number	No Connects		
			XC2VP20	XC2VP30	XC2VP40
N/A	VCCINT	U10			
N/A	VCCINT	U11			
N/A	VCCINT	U16			
N/A	VCCINT	U17			
N/A	VCCINT	U20			
N/A	VCCINT	V9			
N/A	VCCINT	V18			
N/A	VCCINT	Y10			
N/A	VCCINT	Y13			
N/A	VCCINT	Y14			
N/A	VCCINT	Y17			
N/A	VCCAUX	A2			
N/A	VCCAUX	A13			
N/A	VCCAUX	A14			
N/A	VCCAUX	A25			
N/A	VCCAUX	N1			
N/A	VCCAUX	N26			
N/A	VCCAUX	P1			
N/A	VCCAUX	P26			
N/A	VCCAUX	AF2			
N/A	VCCAUX	AF13			
N/A	VCCAUX	AF14			
N/A	VCCAUX	AF25			
N/A	GND	A1			
N/A	GND	A26			
N/A	GND	B2			
N/A	GND	B25			
N/A	GND	C3			
N/A	GND	C24			
N/A	GND	D4			
N/A	GND	D8			
N/A	GND	D19			
N/A	GND	D23			
N/A	GND	F10			
N/A	GND	F17			

Table 7: **FG676/FGG676 — XC2VP20, XC2VP30, and XC2VP40**

Bank	Pin Description	Pin Number	No Connects		
			XC2VP20	XC2VP30	XC2VP40
N/A	GND	H4			
N/A	GND	H23			
N/A	GND	K6			
N/A	GND	K21			
N/A	GND	L11			
N/A	GND	L12			
N/A	GND	L13			
N/A	GND	L14			
N/A	GND	L15			
N/A	GND	L16			
N/A	GND	M3			
N/A	GND	M11			
N/A	GND	M12			
N/A	GND	M13			
N/A	GND	M14			
N/A	GND	M15			
N/A	GND	M16			
N/A	GND	M24			
N/A	GND	N11			
N/A	GND	N12			
N/A	GND	N13			
N/A	GND	N14			
N/A	GND	N15			
N/A	GND	N16			
N/A	GND	P11			
N/A	GND	P12			
N/A	GND	P13			
N/A	GND	P14			
N/A	GND	P15			
N/A	GND	P16			
N/A	GND	R3			
N/A	GND	R11			
N/A	GND	R12			
N/A	GND	R13			
N/A	GND	R14			

Table 7: **FG676/FGG676 — XC2VP20, XC2VP30, and XC2VP40**

Bank	Pin Description	Pin Number	No Connects		
			XC2VP20	XC2VP30	XC2VP40
N/A	GND	R15			
N/A	GND	R16			
N/A	GND	R24			
N/A	GND	T11			
N/A	GND	T12			
N/A	GND	T13			
N/A	GND	T14			
N/A	GND	T15			
N/A	GND	T16			
N/A	GND	U6			
N/A	GND	U21			
N/A	GND	W4			
N/A	GND	W23			
N/A	GND	AA10			
N/A	GND	AA17			
N/A	GND	AC4			
N/A	GND	AC8			
N/A	GND	AC19			
N/A	GND	AC23			
N/A	GND	AD3			
N/A	GND	AD24			
N/A	GND	AE2			
N/A	GND	AE25			
N/A	GND	AF1			
N/A	GND	AF26			

Notes:
1. See Table 4 for an explanation of the signals available on this pin.

FG676/FGG676 Fine-Pitch BGA Package Specifications (1.00mm pitch)

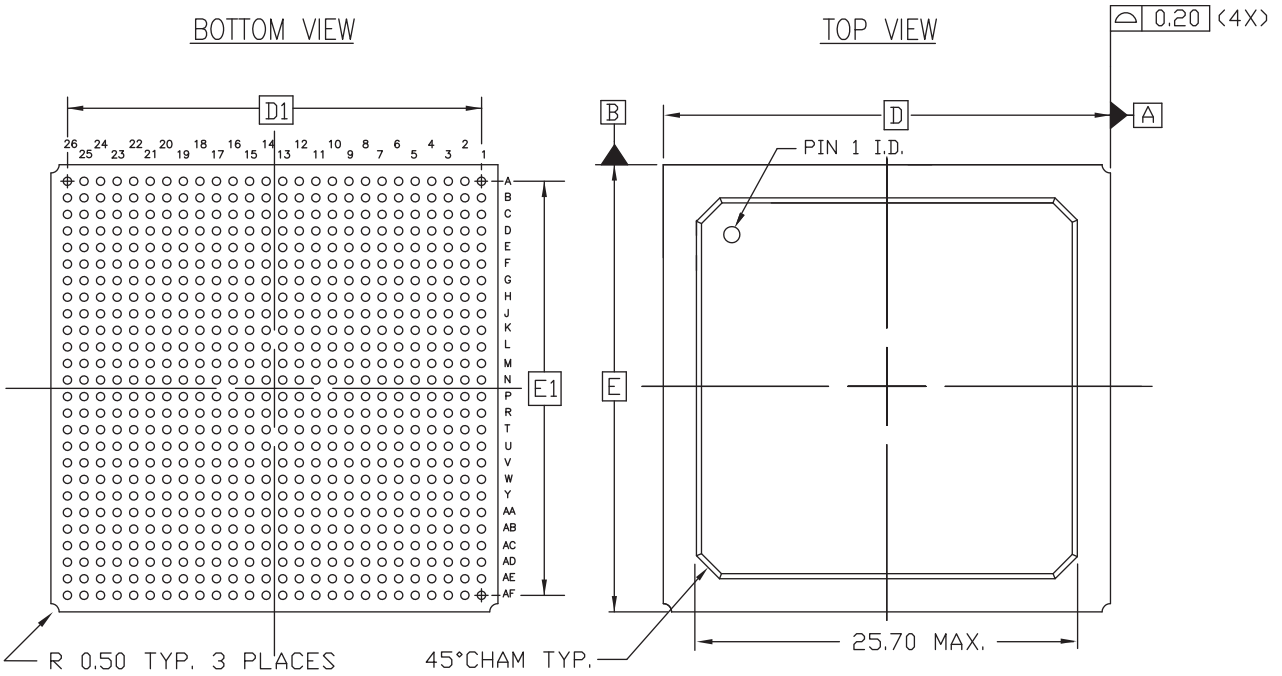

SYMBOL	MILLIMETERS		
	MIN.	NOM.	MAX.
A	2.02	2.23	2.44
A_1	0.40	0.50	0.60
D/E	27.00 BSC		
D_1/E_1	25.00 REF		
e	1.00 BSC		
øb	0.50	0.60	0.70
aaa	~	~	0.20
ccc	~	~	0.35
ddd	~	~	0.30
eee	~	~	0.10
M	26		

NOTES:

1. ALL DIMENSIONS AND TOLERANCES CONFORM TO ANSI Y14.5M–1994
2. SYMBOL 'M' IS THE BALL MATRIX SIZE.
3. CONFORMS TO JEDEC MS–034–AAL–1

ds083_4_03_053111

Figure 3: **FG676/FGG676 Fine-Pitch BGA Package Specifications**

FF672 Flip-Chip Fine-Pitch BGA Package

As shown in Table 8, XC2VP2, XC2VP4, and XC2VP7 Virtex-II Pro devices are available in the FF672 flip-chip fine-pitch BGA package. Pins in each of these devices are the same, except for differences shown in the "No Connects" column. Following this table are the FF672 Flip-Chip Fine-Pitch BGA Package Specifications (1.00mm pitch).

Table 8: **FF672 — XC2VP2, XC2VP4, and XC2VP7**

Bank	Pin Description	Pin Number	No Connects		
			XC2VP2	XC2VP4	XC2VP7
0	IO_L01N_0/VRP_0	B24			
0	IO_L01P_0/VRN_0	A24			
0	IO_L02N_0	D21			
0	IO_L02P_0	C21			
0	IO_L03N_0	E20			
0	IO_L03P_0/VREF_0	D20			
0	IO_L05_0/No_Pair	F19			
0	IO_L06N_0	E19			
0	IO_L06P_0	E18			
0	IO_L07N_0	D19			
0	IO_L07P_0	C19			
0	IO_L08N_0	B19			
0	IO_L08P_0	A19			
0	IO_L09N_0	G18			
0	IO_L09P_0/VREF_0	F18			
0	IO_L37N_0	D18	NC	NC	
0	IO_L37P_0	C18	NC	NC	
0	IO_L38N_0	G17	NC	NC	
0	IO_L38P_0	H16	NC	NC	
0	IO_L39N_0	F17	NC	NC	
0	IO_L39P_0	F16	NC	NC	
0	IO_L43N_0	E17	NC	NC	
0	IO_L43P_0	D17	NC	NC	
0	IO_L44N_0	G16	NC	NC	
0	IO_L44P_0	G15	NC	NC	
0	IO_L45N_0	E16	NC	NC	
0	IO_L45P_0/VREF_0	D16	NC	NC	
0	IO_L67N_0	F15			
0	IO_L67P_0	E15			
0	IO_L68N_0	D15			
0	IO_L68P_0	C15			
0	IO_L69N_0	H15			
0	IO_L69P_0/VREF_0	H14			

Table 8: **FF672 — XC2VP2, XC2VP4, and XC2VP7**

Bank	Pin Description	Pin Number	No Connects		
			XC2VP2	XC2VP4	XC2VP7
0	IO_L73N_0	G14			
0	IO_L73P_0	F14			
0	IO_L74N_0/GCLK7P	E14			
0	IO_L74P_0/GCLK6S	D14			
0	IO_L75N_0/GCLK5P	C14			
0	IO_L75P_0/GCLK4S	B14			
1	IO_L75N_1/GCLK3P	B13			
1	IO_L75P_1/GCLK2S	C13			
1	IO_L74N_1/GCLK1P	D13			
1	IO_L74P_1/GCLK0S	E13			
1	IO_L73N_1	F13			
1	IO_L73P_1	G13			
1	IO_L69N_1/VREF_1	H13			
1	IO_L69P_1	H12			
1	IO_L68N_1	C12			
1	IO_L68P_1	D12			
1	IO_L67N_1	E12			
1	IO_L67P_1	F12			
1	IO_L45N_1/VREF_1	D11	NC	NC	
1	IO_L45P_1	E11	NC	NC	
1	IO_L44N_1	G12	NC	NC	
1	IO_L44P_1	G11	NC	NC	
1	IO_L43N_1	D10	NC	NC	
1	IO_L43P_1	E10	NC	NC	
1	IO_L39N_1	F11	NC	NC	
1	IO_L39P_1	F10	NC	NC	
1	IO_L38N_1	H11	NC	NC	
1	IO_L38P_1	G10	NC	NC	
1	IO_L37N_1	C9	NC	NC	
1	IO_L37P_1	D9	NC	NC	
1	IO_L09N_1/VREF_1	F9			
1	IO_L09P_1	G9			
1	IO_L08N_1	A8			
1	IO_L08P_1	B8			
1	IO_L07N_1	C8			
1	IO_L07P_1	D8			

Table 8: **FF672 — XC2VP2, XC2VP4, and XC2VP7**

Bank	Pin Description	Pin Number	No Connects		
			XC2VP2	XC2VP4	XC2VP7
1	IO_L06N_1	E9			
1	IO_L06P_1	E8			
1	IO_L05_1/No_Pair	F8			
1	IO_L03N_1/VREF_1	D7			
1	IO_L03P_1	E7			
1	IO_L02N_1	C6			
1	IO_L02P_1	D6			
1	IO_L01N_1/VRP_1	A3			
1	IO_L01P_1/VRN_1	B3			
2	IO_L01N_2/VRP_2	C4			
2	IO_L01P_2/VRN_2	D3			
2	IO_L02N_2	A2			
2	IO_L02P_2	B1			
2	IO_L03N_2	C2			
2	IO_L03P_2	C1			
2	IO_L04N_2/VREF_2	D2			
2	IO_L04P_2	D1			
2	IO_L05N_2	E4			
2	IO_L05P_2	E3			
2	IO_L06N_2	E2			
2	IO_L06P_2	E1			
2	IO_L40N_2/VREF_2	F5	NC	NC	NC
2	IO_L40P_2	F4	NC	NC	NC
2	IO_L42N_2	F3	NC	NC	NC
2	IO_L42P_2	F2	NC	NC	NC
2	IO_L43N_2	G6	NC		
2	IO_L43P_2	G5	NC		
2	IO_L44N_2	G4	NC		
2	IO_L44P_2	G3	NC		
2	IO_L45N_2	F1	NC		
2	IO_L45P_2	G1	NC		
2	IO_L46N_2/VREF_2	H6	NC		
2	IO_L46P_2	H5	NC		
2	IO_L47N_2	H4	NC		
2	IO_L47P_2	H3	NC		
2	IO_L48N_2	H2	NC		

Table 8: **FF672 — XC2VP2, XC2VP4, and XC2VP7**

Bank	Pin Description	Pin Number	No Connects		
			XC2VP2	XC2VP4	XC2VP7
2	IO_L48P_2	H1	NC		
2	IO_L49N_2	J7	NC		
2	IO_L49P_2	J6	NC		
2	IO_L50N_2	J5	NC		
2	IO_L50P_2	J4	NC		
2	IO_L51N_2	J3	NC		
2	IO_L51P_2	J2	NC		
2	IO_L52N_2/VREF_2	K6	NC		
2	IO_L52P_2	K5	NC		
2	IO_L53N_2	K4	NC		
2	IO_L53P_2	K3	NC		
2	IO_L54N_2	J1	NC		
2	IO_L54P_2	K1	NC		
2	IO_L55N_2	K7	NC		
2	IO_L55P_2	L8	NC		
2	IO_L56N_2	L7	NC		
2	IO_L56P_2	M7	NC		
2	IO_L57N_2	L6	NC		
2	IO_L57P_2	L5	NC		
2	IO_L58N_2/VREF_2	L4	NC		
2	IO_L58P_2	L3	NC		
2	IO_L59N_2	L2	NC		
2	IO_L59P_2	L1	NC		
2	IO_L60N_2	M8	NC		
2	IO_L60P_2	N8	NC		
2	IO_L85N_2	M6			
2	IO_L85P_2	M5			
2	IO_L86N_2	M4			
2	IO_L86P_2	M3			
2	IO_L87N_2	M2			
2	IO_L87P_2	M1			
2	IO_L88N_2/VREF_2	N7			
2	IO_L88P_2	N6			
2	IO_L89N_2	N5			
2	IO_L89P_2	N4			
2	IO_L90N_2	N3			
2	IO_L90P_2	N2			

Table 8: **FF672 — XC2VP2, XC2VP4, and XC2VP7**

Bank	Pin Description	Pin Number	No Connects		
			XC2VP2	XC2VP4	XC2VP7
3	IO_L90N_3	P2			
3	IO_L90P_3	P3			
3	IO_L89N_3	P4			
3	IO_L89P_3	P5			
3	IO_L88N_3	P6			
3	IO_L88P_3	P7			
3	IO_L87N_3/VREF_3	R1			
3	IO_L87P_3	R2			
3	IO_L86N_3	R3			
3	IO_L86P_3	R4			
3	IO_L85N_3	R5			
3	IO_L85P_3	R6			
3	IO_L60N_3	P8	NC		
3	IO_L60P_3	R8	NC		
3	IO_L59N_3	T1	NC		
3	IO_L59P_3	T2	NC		
3	IO_L58N_3	T3	NC		
3	IO_L58P_3	T4	NC		
3	IO_L57N_3/VREF_3	T5	NC		
3	IO_L57P_3	T6	NC		
3	IO_L56N_3	R7	NC		
3	IO_L56P_3	T7	NC		
3	IO_L55N_3	T8	NC		
3	IO_L55P_3	U7	NC		
3	IO_L54N_3	U1	NC		
3	IO_L54P_3	V1	NC		
3	IO_L53N_3	U3	NC		
3	IO_L53P_3	U4	NC		
3	IO_L52N_3	U5	NC		
3	IO_L52P_3	U6	NC		
3	IO_L51N_3/VREF_3	V2	NC		
3	IO_L51P_3	V3	NC		
3	IO_L50N_3	V4	NC		
3	IO_L50P_3	V5	NC		
3	IO_L49N_3	V6	NC		
3	IO_L49P_3	V7	NC		

Table 8: **FF672 — XC2VP2, XC2VP4, and XC2VP7**

Bank	Pin Description	Pin Number	No Connects		
			XC2VP2	XC2VP4	XC2VP7
3	IO_L48N_3	W1	NC		
3	IO_L48P_3	W2	NC		
3	IO_L47N_3	W3	NC		
3	IO_L47P_3	W4	NC		
3	IO_L46N_3	W5	NC		
3	IO_L46P_3	W6	NC		
3	IO_L45N_3/VREF_3	Y1	NC		
3	IO_L45P_3	AA1	NC		
3	IO_L44N_3	Y3	NC		
3	IO_L44P_3	Y4	NC		
3	IO_L43N_3	Y5	NC		
3	IO_L43P_3	Y6	NC		
3	IO_L42N_3	AA2	NC	NC	NC
3	IO_L42P_3	AA3	NC	NC	NC
3	IO_L41N_3	AA4	NC	NC	NC
3	IO_L41P_3	AA5	NC	NC	NC
3	IO_L39N_3/VREF_3	AB1	NC	NC	NC
3	IO_L39P_3	AB2	NC	NC	NC
3	IO_L06N_3	AB3			
3	IO_L06P_3	AB4			
3	IO_L05N_3	AC1			
3	IO_L05P_3	AC2			
3	IO_L04N_3	AD1			
3	IO_L04P_3	AD2			
3	IO_L03N_3/VREF_3	AE1			
3	IO_L03P_3	AF2			
3	IO_L02N_3	AC3			
3	IO_L02P_3	AD4			
3	IO_L01N_3/VRP_3	AE3			
3	IO_L01P_3/VRN_3	AF3			
4	IO_L01N_4/BUSY/DOUT(1)	AC6			
4	IO_L01P_4/INIT_B	AD6			
4	IO_L02N_4/D0/DIN(1)	AB7			
4	IO_L02P_4/D1	AC7			
4	IO_L03N_4/D2	AA7			
4	IO_L03P_4/D3	AA8			

Table 8: **FF672 — XC2VP2, XC2VP4, and XC2VP7**

Bank	Pin Description	Pin Number	No Connects		
			XC2VP2	XC2VP4	XC2VP7
4	IO_L05_4/No_Pair	Y8			
4	IO_L06N_4/VRP_4	AB8			
4	IO_L06P_4/VRN_4	AB9			
4	IO_L07N_4	AC8			
4	IO_L07P_4/VREF_4	AD8			
4	IO_L08N_4	AE8			
4	IO_L08P_4	AF8			
4	IO_L09N_4	Y9			
4	IO_L09P_4/VREF_4	AA9			
4	IO_L37N_4	AC9	NC	NC	
4	IO_L37P_4	AD9	NC	NC	
4	IO_L38N_4	Y10	NC	NC	
4	IO_L38P_4	W11	NC	NC	
4	IO_L39N_4	AA10	NC	NC	
4	IO_L39P_4	AA11	NC	NC	
4	IO_L43N_4	AB10	NC	NC	
4	IO_L43P_4	AC10	NC	NC	
4	IO_L44N_4	Y11	NC	NC	
4	IO_L44P_4	Y12	NC	NC	
4	IO_L45N_4	AB11	NC	NC	
4	IO_L45P_4/VREF_4	AC11	NC	NC	
4	IO_L67N_4	AA12			
4	IO_L67P_4	AB12			
4	IO_L68N_4	AC12			
4	IO_L68P_4	AD12			
4	IO_L69N_4	W12			
4	IO_L69P_4/VREF_4	W13			
4	IO_L73N_4	Y13			
4	IO_L73P_4	AA13			
4	IO_L74N_4/GCLK3S	AB13			
4	IO_L74P_4/GCLK2P	AC13			
4	IO_L75N_4/GCLK1S	AD13			
4	IO_L75P_4/GCLK0P	AE13			
5	IO_L75N_5/GCLK7S	AE14			
5	IO_L75P_5/GCLK6P	AD14			
5	IO_L74N_5/GCLK5S	AC14			

Table 8: **FF672 — XC2VP2, XC2VP4, and XC2VP7**

Bank	Pin Description	Pin Number	No Connects		
			XC2VP2	XC2VP4	XC2VP7
5	IO_L74P_5/GCLK4P	AB14			
5	IO_L73N_5	AA14			
5	IO_L73P_5	Y14			
5	IO_L69N_5/VREF_5	W14			
5	IO_L69P_5	W15			
5	IO_L68N_5	AD15			
5	IO_L68P_5	AC15			
5	IO_L67N_5	AB15			
5	IO_L67P_5	AA15			
5	IO_L45N_5/VREF_5	AC16	NC	NC	
5	IO_L45P_5	AB16	NC	NC	
5	IO_L44N_5	Y15	NC	NC	
5	IO_L44P_5	Y16	NC	NC	
5	IO_L43N_5	AC17	NC	NC	
5	IO_L43P_5	AB17	NC	NC	
5	IO_L39N_5	AA16	NC	NC	
5	IO_L39P_5	AA17	NC	NC	
5	IO_L38N_5	W16	NC	NC	
5	IO_L38P_5	Y17	NC	NC	
5	IO_L37N_5	AD18	NC	NC	
5	IO_L37P_5	AC18	NC	NC	
5	IO_L09N_5/VREF_5	AA18			
5	IO_L09P_5	Y18			
5	IO_L08N_5	AF19			
5	IO_L08P_5	AE19			
5	IO_L07N_5/VREF_5	AD19			
5	IO_L07P_5	AC19			
5	IO_L06N_5/VRP_5	AB18			
5	IO_L06P_5/VRN_5	AB19			
5	IO_L05_5/No_Pair	Y19			
5	IO_L03N_5/D4	AA19			
5	IO_L03P_5/D5	AA20			
5	IO_L02N_5/D6	AC20			
5	IO_L02P_5/D7	AB20			
5	IO_L01N_5/RDWR_B	AD21			
5	IO_L01P_5/CS_B	AC21			

Table 8: **FF672 — XC2VP2, XC2VP4, and XC2VP7**

Bank	Pin Description	Pin Number	No Connects		
			XC2VP2	XC2VP4	XC2VP7
6	IO_L01P_6/VRN_6	AF24			
6	IO_L01N_6/VRP_6	AE24			
6	IO_L02P_6	AD23			
6	IO_L02N_6	AC24			
6	IO_L03P_6	AE26			
6	IO_L03N_6/VREF_6	AF25			
6	IO_L04P_6	AD25			
6	IO_L04N_6	AD26			
6	IO_L05P_6	AC25			
6	IO_L05N_6	AC26			
6	IO_L06P_6	AB23			
6	IO_L06N_6	AB24			
6	IO_L39P_6	AB25	NC	NC	NC
6	IO_L39N_6/VREF_6	AB26	NC	NC	NC
6	IO_L41P_6	AA22	NC	NC	NC
6	IO_L41N_6	AA23	NC	NC	NC
6	IO_L42P_6	AA24	NC	NC	NC
6	IO_L42N_6	AA25	NC	NC	NC
6	IO_L43P_6	Y21	NC		
6	IO_L43N_6	Y22	NC		
6	IO_L44P_6	Y23	NC		
6	IO_L44N_6	Y24	NC		
6	IO_L45P_6	AA26	NC		
6	IO_L45N_6/VREF_6	Y26	NC		
6	IO_L46P_6	W21	NC		
6	IO_L46N_6	W22	NC		
6	IO_L47P_6	W23	NC		
6	IO_L47N_6	W24	NC		
6	IO_L48P_6	W25	NC		
6	IO_L48N_6	W26	NC		
6	IO_L49P_6	V20	NC		
6	IO_L49N_6	V21	NC		
6	IO_L50P_6	V22	NC		
6	IO_L50N_6	V23	NC		
6	IO_L51P_6	V24	NC		
6	IO_L51N_6/VREF_6	V25	NC		
6	IO_L52P_6	U21	NC		

Table 8: **FF672 — XC2VP2, XC2VP4, and XC2VP7**

Bank	Pin Description	Pin Number	No Connects		
			XC2VP2	XC2VP4	XC2VP7
6	IO_L52N_6	U22	NC		
6	IO_L53P_6	U23	NC		
6	IO_L53N_6	U24	NC		
6	IO_L54P_6	V26	NC		
6	IO_L54N_6	U26	NC		
6	IO_L55P_6	U20	NC		
6	IO_L55N_6	T19	NC		
6	IO_L56P_6	T20	NC		
6	IO_L56N_6	R20	NC		
6	IO_L57P_6	T21	NC		
6	IO_L57N_6/VREF_6	T22	NC		
6	IO_L58P_6	T23	NC		
6	IO_L58N_6	T24	NC		
6	IO_L59P_6	T25	NC		
6	IO_L59N_6	T26	NC		
6	IO_L60P_6	R19	NC		
6	IO_L60N_6	P19	NC		
6	IO_L85P_6	R21			
6	IO_L85N_6	R22			
6	IO_L86P_6	R23			
6	IO_L86N_6	R24			
6	IO_L87P_6	R25			
6	IO_L87N_6/VREF_6	R26			
6	IO_L88P_6	P20			
6	IO_L88N_6	P21			
6	IO_L89P_6	P22			
6	IO_L89N_6	P23			
6	IO_L90P_6	P24			
6	IO_L90N_6	P25			
7	IO_L90P_7	N25			
7	IO_L90N_7	N24			
7	IO_L89P_7	N23			
7	IO_L89N_7	N22			
7	IO_L88P_7	N21			
7	IO_L88N_7/VREF_7	N20			
7	IO_L87P_7	M26			

Table 8: **FF672 — XC2VP2, XC2VP4, and XC2VP7**

Bank	Pin Description	Pin Number	No Connects		
			XC2VP2	XC2VP4	XC2VP7
7	IO_L87N_7	M25			
7	IO_L86P_7	M24			
7	IO_L86N_7	M23			
7	IO_L85P_7	M22			
7	IO_L85N_7	M21			
7	IO_L60P_7	N19	NC		
7	IO_L60N_7	M19	NC		
7	IO_L59P_7	L26	NC		
7	IO_L59N_7	L25	NC		
7	IO_L58P_7	L24	NC		
7	IO_L58N_7/VREF_7	L23	NC		
7	IO_L57P_7	L22	NC		
7	IO_L57N_7	L21	NC		
7	IO_L56P_7	M20	NC		
7	IO_L56N_7	L20	NC		
7	IO_L55P_7	L19	NC		
7	IO_L55N_7	K20	NC		
7	IO_L54P_7	K26	NC		
7	IO_L54N_7	J26	NC		
7	IO_L53P_7	K24	NC		
7	IO_L53N_7	K23	NC		
7	IO_L52P_7	K22	NC		
7	IO_L52N_7/VREF_7	K21	NC		
7	IO_L51P_7	J25	NC		
7	IO_L51N_7	J24	NC		
7	IO_L50P_7	J23	NC		
7	IO_L50N_7	J22	NC		
7	IO_L49P_7	J21	NC		
7	IO_L49N_7	J20	NC		
7	IO_L48P_7	H26	NC		
7	IO_L48N_7	H25	NC		
7	IO_L47P_7	H24	NC		
7	IO_L47N_7	H23	NC		
7	IO_L46P_7	H22	NC		
7	IO_L46N_7/VREF_7	H21	NC		
7	IO_L45P_7	G26	NC		
7	IO_L45N_7	F26	NC		

Table 8: **FF672 — XC2VP2, XC2VP4, and XC2VP7**

Bank	Pin Description	Pin Number	No Connects		
			XC2VP2	XC2VP4	XC2VP7
7	IO_L44P_7	G24	NC		
7	IO_L44N_7	G23	NC		
7	IO_L43P_7	G22	NC		
7	IO_L43N_7	G21	NC		
7	IO_L42P_7	F25	NC	NC	NC
7	IO_L42N_7	F24	NC	NC	NC
7	IO_L40P_7	F23	NC	NC	NC
7	IO_L40N_7/VREF_7	F22	NC	NC	NC
7	IO_L06P_7	E26			
7	IO_L06N_7	E25			
7	IO_L05P_7	E24			
7	IO_L05N_7	E23			
7	IO_L04P_7	D26			
7	IO_L04N_7/VREF_7	D25			
7	IO_L03P_7	C26			
7	IO_L03N_7	C25			
7	IO_L02P_7	B26			
7	IO_L02N_7	A25			
7	IO_L01P_7/VRN_7	D24			
7	IO_L01N_7/VRP_7	C23			
0	VCCO_0	C17			
0	VCCO_0	C20			
0	VCCO_0	H17			
0	VCCO_0	H18			
0	VCCO_0	J14			
0	VCCO_0	J15			
0	VCCO_0	J16			
1	VCCO_1	C7			
1	VCCO_1	H9			
1	VCCO_1	C10			
1	VCCO_1	H10			
1	VCCO_1	J11			
1	VCCO_1	J12			
1	VCCO_1	J13			
2	VCCO_2	G2			
2	VCCO_2	J8			

Table 8: **FF672 — XC2VP2, XC2VP4, and XC2VP7**

Bank	Pin Description	Pin Number	No Connects		
			XC2VP2	XC2VP4	XC2VP7
2	VCCO_2	K2			
2	VCCO_2	K8			
2	VCCO_2	L9			
2	VCCO_2	M9			
2	VCCO_2	N9			
3	VCCO_3	P9			
3	VCCO_3	R9			
3	VCCO_3	T9			
3	VCCO_3	U2			
3	VCCO_3	U8			
3	VCCO_3	V8			
3	VCCO_3	Y2			
4	VCCO_4	W9			
4	VCCO_4	AD7			
4	VCCO_4	V11			
4	VCCO_4	V12			
4	VCCO_4	V13			
4	VCCO_4	W10			
4	VCCO_4	AD10			
5	VCCO_5	V14			
5	VCCO_5	V15			
5	VCCO_5	V16			
5	VCCO_5	W17			
5	VCCO_5	W18			
5	VCCO_5	AD17			
5	VCCO_5	AD20			
6	VCCO_6	P18			
6	VCCO_6	R18			
6	VCCO_6	T18			
6	VCCO_6	U19			
6	VCCO_6	U25			
6	VCCO_6	V19			
6	VCCO_6	Y25			
7	VCCO_7	G25			
7	VCCO_7	J19			
7	VCCO_7	K19			
7	VCCO_7	K25			

Table 8: **FF672 — XC2VP2, XC2VP4, and XC2VP7**

Bank	Pin Description	Pin Number	No Connects		
			XC2VP2	XC2VP4	XC2VP7
7	VCCO_7	L18			
7	VCCO_7	M18			
7	VCCO_7	N18			
N/A	CCLK	W7			
N/A	PROG_B	D22			
N/A	DONE	AB6			
N/A	M0	AC22			
N/A	M1	W20			
N/A	M2	AB21			
N/A	TCK	G8			
N/A	TDI	H20			
N/A	TDO	H7			
N/A	TMS	F7			
N/A	PWRDWN_B	AC5			
N/A	HSWAP_EN	E21			
N/A	RSVD	D5			
N/A	VBATT	E6			
N/A	DXP	F20			
N/A	DXN	G19			
N/A	AVCCAUXTX7	B11			
N/A	VTTXPAD7	B12			
N/A	TXNPAD7	A12			
N/A	TXPPAD7	A11			
N/A	GNDA7	C11			
N/A	RXPPAD7	A10			
N/A	RXNPAD7	A9			
N/A	VTRXPAD7	B10			
N/A	AVCCAUXRX7	B9			
N/A	AVCCAUXTX9	B6	NC	NC	
N/A	VTTXPAD9	B7	NC	NC	
N/A	TXNPAD9	A7	NC	NC	
N/A	TXPPAD9	A6	NC	NC	
N/A	GNDA9	C5	NC	NC	
N/A	RXPPAD9	A5	NC	NC	
N/A	RXNPAD9	A4	NC	NC	
N/A	VTRXPAD9	B5	NC	NC	

Table 8: **FF672 — XC2VP2, XC2VP4, and XC2VP7**

Bank	Pin Description	Pin Number	No Connects		
			XC2VP2	XC2VP4	XC2VP7
N/A	AVCCAUXRX9	B4	NC	NC	
N/A	AVCCAUXRX16	AE4	NC	NC	
N/A	VTRXPAD16	AE5	NC	NC	
N/A	RXNPAD16	AF4	NC	NC	
N/A	RXPPAD16	AF5	NC	NC	
N/A	GNDA16	AD5	NC	NC	
N/A	TXPPAD16	AF6	NC	NC	
N/A	TXNPAD16	AF7	NC	NC	
N/A	VTTXPAD16	AE7	NC	NC	
N/A	AVCCAUXTX16	AE6	NC	NC	
N/A	AVCCAUXRX18	AE9			
N/A	VTRXPAD18	AE10			
N/A	RXNPAD18	AF9			
N/A	RXPPAD18	AF10			
N/A	GNDA18	AD11			
N/A	TXPPAD18	AF11			
N/A	TXNPAD18	AF12			
N/A	VTTXPAD18	AE12			
N/A	AVCCAUXTX18	AE11			
N/A	AVCCAUXTX4	B22	NC	NC	
N/A	VTTXPAD4	B23	NC	NC	
N/A	TXNPAD4	A23	NC	NC	
N/A	TXPPAD4	A22	NC	NC	
N/A	GNDA4	C22	NC	NC	
N/A	RXPPAD4	A21	NC	NC	
N/A	RXNPAD4	A20	NC	NC	
N/A	VTRXPAD4	B21	NC	NC	
N/A	AVCCAUXRX4	B20	NC	NC	
N/A	AVCCAUXTX6	B17			
N/A	VTTXPAD6	B18			
N/A	TXNPAD6	A18			
N/A	TXPPAD6	A17			
N/A	GNDA6	C16			
N/A	RXPPAD6	A16			
N/A	RXNPAD6	A15			
N/A	VTRXPAD6	B16			
N/A	AVCCAUXRX6	B15			

Table 8: **FF672 — XC2VP2, XC2VP4, and XC2VP7**

Bank	Pin Description	Pin Number	No Connects		
			XC2VP2	XC2VP4	XC2VP7
N/A	AVCCAUXRX19	AE15			
N/A	VTRXPAD19	AE16			
N/A	RXNPAD19	AF15			
N/A	RXPPAD19	AF16			
N/A	GNDA19	AD16			
N/A	TXPPAD19	AF17			
N/A	TXNPAD19	AF18			
N/A	VTTXPAD19	AE18			
N/A	AVCCAUXTX19	AE17			
N/A	AVCCAUXRX21	AE20	NC	NC	
N/A	VTRXPAD21	AE21	NC	NC	
N/A	RXNPAD21	AF20	NC	NC	
N/A	RXPPAD21	AF21	NC	NC	
N/A	GNDA21	AD22	NC	NC	
N/A	TXPPAD21	AF22	NC	NC	
N/A	TXNPAD21	AF23	NC	NC	
N/A	VTTXPAD21	AE23	NC	NC	
N/A	AVCCAUXTX21	AE22	NC	NC	
N/A	VCCINT	H8			
N/A	VCCINT	J9			
N/A	VCCINT	K9			
N/A	VCCINT	U9			
N/A	VCCINT	V9			
N/A	VCCINT	W8			
N/A	VCCINT	H19			
N/A	VCCINT	J10			
N/A	VCCINT	J17			
N/A	VCCINT	J18			
N/A	VCCINT	K11			
N/A	VCCINT	K16			
N/A	VCCINT	K18			
N/A	VCCINT	L10			
N/A	VCCINT	L17			
N/A	VCCINT	T10			
N/A	VCCINT	T17			
N/A	VCCINT	U11			

Table 8: **FF672 — XC2VP2, XC2VP4, and XC2VP7**

Bank	Pin Description	Pin Number	No Connects		
			XC2VP2	XC2VP4	XC2VP7
N/A	VCCINT	U16			
N/A	VCCINT	U18			
N/A	VCCINT	V10			
N/A	VCCINT	V17			
N/A	VCCINT	V18			
N/A	VCCINT	W19			
N/A	VCCAUX	B2			
N/A	VCCAUX	N1			
N/A	VCCAUX	P1			
N/A	VCCAUX	A13			
N/A	VCCAUX	A14			
N/A	VCCAUX	AE2			
N/A	VCCAUX	B25			
N/A	VCCAUX	N26			
N/A	VCCAUX	P26			
N/A	VCCAUX	AE25			
N/A	VCCAUX	AF13			
N/A	VCCAUX	AF14			
N/A	GND	C3			
N/A	GND	D4			
N/A	GND	E5			
N/A	GND	F6			
N/A	GND	G7			
N/A	GND	Y7			
N/A	GND	AA6			
N/A	GND	AB5			
N/A	GND	AC4			
N/A	GND	AD3			
N/A	GND	C24			
N/A	GND	D23			
N/A	GND	E22			
N/A	GND	F21			
N/A	GND	G20			
N/A	GND	K10			
N/A	GND	K12			
N/A	GND	K13			
N/A	GND	K14			

Table 8: **FF672 — XC2VP2, XC2VP4, and XC2VP7**

Bank	Pin Description	Pin Number	No Connects		
			XC2VP2	XC2VP4	XC2VP7
N/A	GND	K15			
N/A	GND	K17			
N/A	GND	L11			
N/A	GND	L12			
N/A	GND	L13			
N/A	GND	L14			
N/A	GND	L15			
N/A	GND	L16			
N/A	GND	M10			
N/A	GND	M11			
N/A	GND	M12			
N/A	GND	M13			
N/A	GND	M14			
N/A	GND	M15			
N/A	GND	M16			
N/A	GND	M17			
N/A	GND	N10			
N/A	GND	N11			
N/A	GND	N12			
N/A	GND	N13			
N/A	GND	N14			
N/A	GND	N15			
N/A	GND	N16			
N/A	GND	N17			
N/A	GND	P10			
N/A	GND	P11			
N/A	GND	P12			
N/A	GND	P13			
N/A	GND	P14			
N/A	GND	P15			
N/A	GND	P16			
N/A	GND	P17			
N/A	GND	R10			
N/A	GND	R11			
N/A	GND	R12			
N/A	GND	R13			
N/A	GND	R14			

Table 8: **FF672 — XC2VP2, XC2VP4, and XC2VP7**

Bank	Pin Description	Pin Number	No Connects		
			XC2VP2	XC2VP4	XC2VP7
N/A	GND	R15			
N/A	GND	R16			
N/A	GND	R17			
N/A	GND	T11			
N/A	GND	T12			
N/A	GND	T13			
N/A	GND	T14			
N/A	GND	T15			
N/A	GND	T16			
N/A	GND	U10			
N/A	GND	U12			
N/A	GND	U13			
N/A	GND	U14			
N/A	GND	U15			
N/A	GND	U17			
N/A	GND	Y20			
N/A	GND	AA21			
N/A	GND	AB22			
N/A	GND	AC23			
N/A	GND	AD24			

Notes:
1. See Table 4 for an explanation of the signals available on this pin.

FF672 Flip-Chip Fine-Pitch BGA Package Specifications (1.00mm pitch)

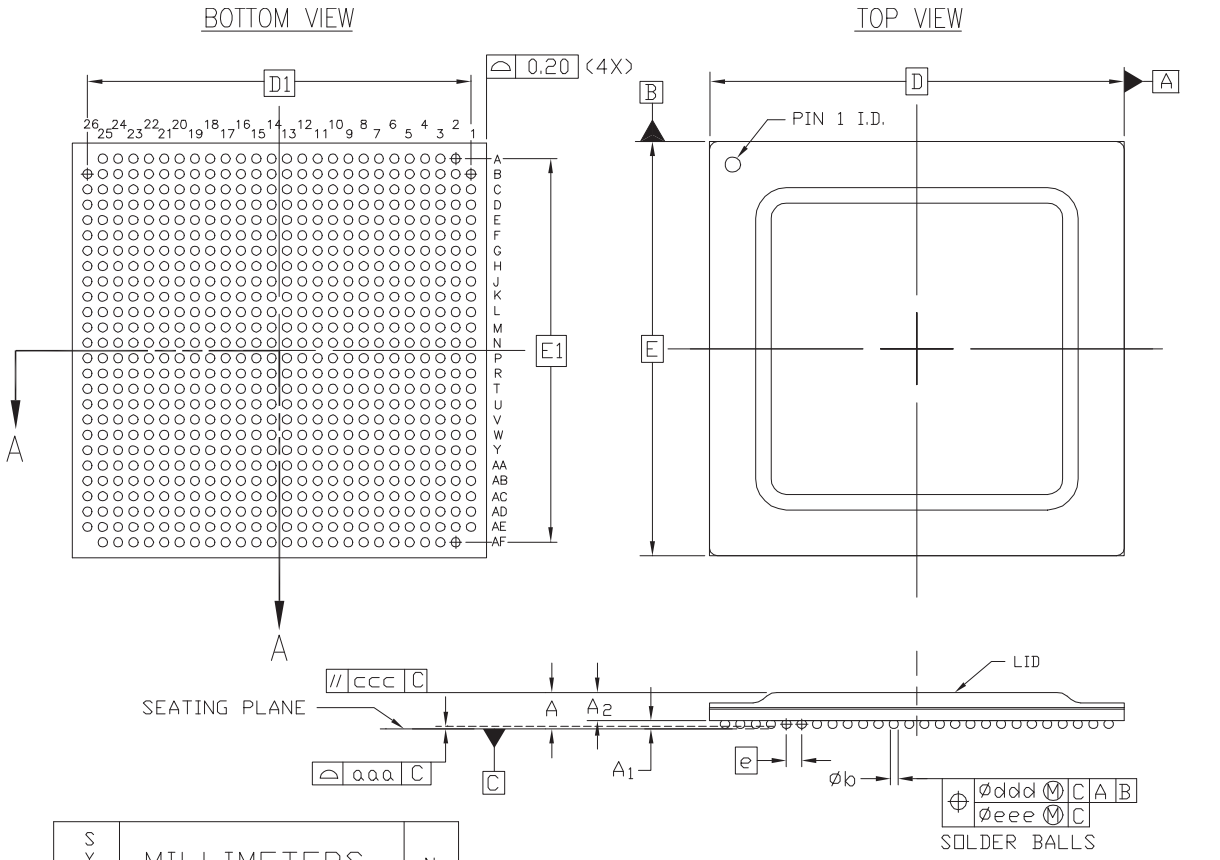

SYMBOL	MILLIMETERS			NOTE
	MIN.	NOM.	MAX.	
A		2.45	2.65	
A_1	0.40	0.50	0.60	
A_2			2.15	
D/E	27.00 BASIC			
D_1/E_1	25.00 REF			
e	1.00 BASIC			
øb	0.50	0.60	0.70	
aaa			0.20	
ccc			0.35	
ddd			0.30	
eee			0.10	
M	26			2

NOTES:

1. ALL DIMENSIONS AND TOLERANCES CONFORM TO ANSI Y14.5M–1994
2. SYMBOL 'M' IS THE BALL MATRIX SIZE.
3. CONFORMS TO JEDEC MS–034–AAL–1 (DEPOPULATED)

Figure 4: **FF672 Flip-Chip Fine-Pitch BGA Package Specifications**

FF896 Flip-Chip Fine-Pitch BGA Package

As shown in Table 9, XC2VP7, XC2VP20, and XC2VP30 Virtex-II Pro devices are available in the FF896 flip-chip fine-pitch BGA package. Pins in each of these devices are the same, except for differences shown in the "No Connects" column. Following this table are the FF896 Flip-Chip Fine-Pitch BGA Package Specifications (1.00mm pitch).

Table 9: **FF896 — XC2VP7, XC2VP20, XC2VPX20, and XC2VP30**

Bank	Pin Description		Pin Number	No Connects		
	Virtex-II Pro devices	XC2VPX20 (if Different)		XC2VP7	XC2VP20, XC2VPX20	XC2VP30
0	IO_L01N_0/VRP_0		E25			
0	IO_L01P_0/VRN_0		E24			
0	IO_L02N_0		F24			
0	IO_L02P_0		F23			
0	IO_L03N_0		E23			
0	IO_L03P_0/VREF_0		E22			
0	IO_L05_0/No_Pair		G23			
0	IO_L06N_0		H22			
0	IO_L06P_0		G22			
0	IO_L07N_0		F22			
0	IO_L07P_0		F21			
0	IO_L08N_0		D24			
0	IO_L08P_0		C24			
0	IO_L09N_0		H21			
0	IO_L09P_0/VREF_0		G21			
0	IO_L37N_0		E21			
0	IO_L37P_0		D21			
0	IO_L38N_0		D23			
0	IO_L38P_0		C23			
0	IO_L39N_0		H20			
0	IO_L39P_0		G20			
0	IO_L43N_0		E20			
0	IO_L43P_0		D20			
0	IO_L44N_0		B23			
0	IO_L44P_0		A23			
0	IO_L45N_0		H19			
0	IO_L45P_0/VREF_0		G19			
0	IO_L46N_0		E19	NC		
0	IO_L46P_0		E18	NC		
0	IO_L47N_0		C22	NC		
0	IO_L47P_0		B22	NC		
0	IO_L48N_0		F20	NC		
0	IO_L48P_0		F19	NC		
0	IO_L49N_0		G17	NC		
0	IO_L49P_0		F17	NC		
0	IO_L50_0/No_Pair		B21	NC		

Table 9: **FF896 — XC2VP7, XC2VP20, XC2VPX20, and XC2VP30**

Bank	Pin Description		Pin Number	No Connects		
	Virtex-II Pro devices	XC2VPX20 (if Different)		XC2VP7	XC2VP20, XC2VPX20	XC2VP30
0	IO_L53_0/No_Pair		A21	NC		
0	IO_L54N_0		H18	NC		
0	IO_L54P_0		G18	NC		
0	IO_L56N_0		C21	NC		
0	IO_L56P_0		C20	NC		
0	IO_L57N_0		J17	NC		
0	IO_L57P_0/VREF_0		H17	NC		
0	IO_L67N_0		E17			
0	IO_L67P_0		D17			
0	IO_L68N_0		D18			
0	IO_L68P_0		C18			
0	IO_L69N_0		J16			
0	IO_L69P_0/VREF_0		H16			
0	IO_L73N_0		E16			
0	IO_L73P_0		D16			
0	IO_L74N_0/GCLK7P		C16			
0	IO_L74P_0/GCLK6S		B16			
0	IO_L75N_0/GCLK5P	BREFCLKN	G16			
0	IO_L75P_0/GCLK4S	BREFCLKP	F16			
1	IO_L75N_1/GCLK3P		F15			
1	IO_L75P_1/GCLK2S		G15			
1	IO_L74N_1/GCLK1P		B15			
1	IO_L74P_1/GCLK0S		C15			
1	IO_L73N_1		D15			
1	IO_L73P_1		E15			
1	IO_L69N_1/VREF_1		H15			
1	IO_L69P_1		J15			
1	IO_L68N_1		C13			
1	IO_L68P_1		D13			
1	IO_L67N_1		D14			
1	IO_L67P_1		E14			
1	IO_L57N_1/VREF_1		H14	NC		
1	IO_L57P_1		J14	NC		
1	IO_L56N_1		C11	NC		
1	IO_L56P_1		C10	NC		

Table 9: **FF896 — XC2VP7, XC2VP20, XC2VPX20, and XC2VP30**

Bank	Pin Description		Pin Number	No Connects		
	Virtex-II Pro devices	XC2VPX20 (if Different)		XC2VP7	XC2VP20, XC2VPX20	XC2VP30
1	IO_L54N_1		G13	NC		
1	IO_L54P_1		H13	NC		
1	IO_L53_1/No_Pair		A10	NC		
1	IO_L50_1/No_Pair		B10	NC		
1	IO_L49N_1		F14	NC		
1	IO_L49P_1		G14	NC		
1	IO_L48N_1		F12	NC		
1	IO_L48P_1		F11	NC		
1	IO_L47N_1		B9	NC		
1	IO_L47P_1		C9	NC		
1	IO_L46N_1		E13	NC		
1	IO_L46P_1		E12	NC		
1	IO_L45N_1/VREF_1		G12			
1	IO_L45P_1		H12			
1	IO_L44N_1		A8			
1	IO_L44P_1		B8			
1	IO_L43N_1		D11			
1	IO_L43P_1		E11			
1	IO_L39N_1		G11			
1	IO_L39P_1		H11			
1	IO_L38N_1		C8			
1	IO_L38P_1		D8			
1	IO_L37N_1		D10			
1	IO_L37P_1		E10			
1	IO_L09N_1/VREF_1		G10			
1	IO_L09P_1		H10			
1	IO_L08N_1		C7			
1	IO_L08P_1		D7			
1	IO_L07N_1		F10			
1	IO_L07P_1		F9			
1	IO_L06N_1		G9			
1	IO_L06P_1		H9			
1	IO_L05_1/No_Pair		G8			
1	IO_L03N_1/VREF_1		E9			
1	IO_L03P_1		E8			
1	IO_L02N_1		F8			

Table 9: **FF896 — XC2VP7, XC2VP20, XC2VPX20, and XC2VP30**

Bank	Pin Description		Pin Number	No Connects		
	Virtex-II Pro devices	XC2VPX20 (if Different)		XC2VP7	XC2VP20, XC2VPX20	XC2VP30
1	IO_L02P_1		F7			
1	IO_L01N_1/VRP_1		E7			
1	IO_L01P_1/VRN_1		E6			
2	IO_L01N_2/VRP_2		A3			
2	IO_L01P_2/VRN_2		B3			
2	IO_L02N_2		G6			
2	IO_L02P_2		G5			
2	IO_L03N_2		C5			
2	IO_L03P_2		D5			
2	IO_L04N_2/VREF_2		C2			
2	IO_L04P_2		C1			
2	IO_L05N_2		J8			
2	IO_L05P_2		J7			
2	IO_L06N_2		C4			
2	IO_L06P_2		D3			
2	IO_L31N_2		D2	NC		
2	IO_L31P_2		D1	NC		
2	IO_L32N_2		H6	NC		
2	IO_L32P_2		H5	NC		
2	IO_L33N_2		E4	NC		
2	IO_L33P_2		E3	NC		
2	IO_L34N_2/VREF_2		E2	NC		
2	IO_L34P_2		E1	NC		
2	IO_L35N_2		K8	NC		
2	IO_L35P_2		K7	NC		
2	IO_L36N_2		F4	NC		
2	IO_L36P_2		F3	NC		
2	IO_L37N_2		F2	NC		
2	IO_L37P_2		F1	NC		
2	IO_L38N_2		J6	NC		
2	IO_L38P_2		J5	NC		
2	IO_L39N_2		G4	NC		
2	IO_L39P_2		G3	NC		
2	IO_L40N_2/VREF_2		G2	NC		
2	IO_L40P_2		G1	NC		

Table 9: **FF896 — XC2VP7, XC2VP20, XC2VPX20, and XC2VP30**

Bank	Pin Description		Pin Number	No Connects		
	Virtex-II Pro devices	XC2VPX20 (if Different)		XC2VP7	XC2VP20, XC2VPX20	XC2VP30
2	IO_L41N_2		L8	NC		
2	IO_L41P_2		L7	NC		
2	IO_L42N_2		H4	NC		
2	IO_L42P_2		H3	NC		
2	IO_L43N_2		H2			
2	IO_L43P_2		J2			
2	IO_L44N_2		M8			
2	IO_L44P_2		M7			
2	IO_L45N_2		K6			
2	IO_L45P_2		K5			
2	IO_L46N_2/VREF_2		J1			
2	IO_L46P_2		K1			
2	IO_L47N_2		M6			
2	IO_L47P_2		M5			
2	IO_L48N_2		J4			
2	IO_L48P_2		J3			
2	IO_L49N_2		K2			
2	IO_L49P_2		L2			
2	IO_L50N_2		N8			
2	IO_L50P_2		N7			
2	IO_L51N_2		K4			
2	IO_L51P_2		K3			
2	IO_L52N_2/VREF_2		L1			
2	IO_L52P_2		M1			
2	IO_L53N_2		N6			
2	IO_L53P_2		N5			
2	IO_L54N_2		L5			
2	IO_L54P_2		L4			
2	IO_L55N_2		M2			
2	IO_L55P_2		N2			
2	IO_L56N_2		P9			
2	IO_L56P_2		R9			
2	IO_L57N_2		M4			
2	IO_L57P_2		M3			
2	IO_L58N_2/VREF_2		N1			
2	IO_L58P_2		P1			

Table 9: **FF896 — XC2VP7, XC2VP20, XC2VPX20, and XC2VP30**

Bank	Pin Description		Pin Number	No Connects		
	Virtex-II Pro devices	XC2VPX20 (if Different)		XC2VP7	XC2VP20, XC2VPX20	XC2VP30
2	IO_L59N_2		P8			
2	IO_L59P_2		P7			
2	IO_L60N_2		N4			
2	IO_L60P_2		N3			
2	IO_L85N_2		P3			
2	IO_L85P_2		P2			
2	IO_L86N_2		R8			
2	IO_L86P_2		R7			
2	IO_L87N_2		P5			
2	IO_L87P_2		P4			
2	IO_L88N_2/VREF_2		R2			
2	IO_L88P_2		T2			
2	IO_L89N_2		R6			
2	IO_L89P_2		R5			
2	IO_L90N_2		R4			
2	IO_L90P_2		R3			
3	IO_L90N_3		U1			
3	IO_L90P_3		V1			
3	IO_L89N_3		T5			
3	IO_L89P_3		T6			
3	IO_L88N_3		T3			
3	IO_L88P_3		T4			
3	IO_L87N_3/VREF_3		U2			
3	IO_L87P_3		U3			
3	IO_L86N_3		T7			
3	IO_L86P_3		T8			
3	IO_L85N_3		U4			
3	IO_L85P_3		U5			
3	IO_L60N_3		V2			
3	IO_L60P_3		W2			
3	IO_L59N_3		T9			
3	IO_L59P_3		U9			
3	IO_L58N_3		V3			
3	IO_L58P_3		V4			
3	IO_L57N_3/VREF_3		W1			

Table 9: **FF896 — XC2VP7, XC2VP20, XC2VPX20, and XC2VP30**

Bank	Pin Description		Pin Number	No Connects		
	Virtex-II Pro devices	XC2VPX20 (if Different)		XC2VP7	XC2VP20, XC2VPX20	XC2VP30
3	IO_L57P_3		Y1			
3	IO_L56N_3		U7			
3	IO_L56P_3		U8			
3	IO_L55N_3		V5			
3	IO_L55P_3		V6			
3	IO_L54N_3		Y2			
3	IO_L54P_3		AA2			
3	IO_L53N_3		V7			
3	IO_L53P_3		V8			
3	IO_L52N_3		W3			
3	IO_L52P_3		W4			
3	IO_L51N_3/VREF_3		AA1			
3	IO_L51P_3		AB1			
3	IO_L50N_3		W5			
3	IO_L50P_3		W6			
3	IO_L49N_3		Y4			
3	IO_L49P_3		Y5			
3	IO_L48N_3		AA3			
3	IO_L48P_3		AA4			
3	IO_L47N_3		W7			
3	IO_L47P_3		W8			
3	IO_L46N_3		AB3			
3	IO_L46P_3		AB4			
3	IO_L45N_3/VREF_3		AB2			
3	IO_L45P_3		AC2			
3	IO_L44N_3		AA5			
3	IO_L44P_3		AA6			
3	IO_L43N_3		AC3			
3	IO_L43P_3		AC4			
3	IO_L42N_3		AD1	NC		
3	IO_L42P_3		AD2	NC		
3	IO_L41N_3		Y7	NC		
3	IO_L41P_3		Y8	NC		
3	IO_L40N_3		AB5	NC		
3	IO_L40P_3		AB6	NC		
3	IO_L39N_3/VREF_3		AE1	NC		

Table 9: **FF896 — XC2VP7, XC2VP20, XC2VPX20, and XC2VP30**

Bank	Pin Description		Pin Number	No Connects		
	Virtex-II Pro devices	XC2VPX20 (if Different)		XC2VP7	XC2VP20, XC2VPX20	XC2VP30
3	IO_L39P_3		AE2	NC		
3	IO_L38N_3		AA7	NC		
3	IO_L38P_3		AA8	NC		
3	IO_L37N_3		AD3	NC		
3	IO_L37P_3		AD4	NC		
3	IO_L36N_3		AF1	NC		
3	IO_L36P_3		AF2	NC		
3	IO_L35N_3		AC5	NC		
3	IO_L35P_3		AC6	NC		
3	IO_L34N_3		AF3	NC		
3	IO_L34P_3		AF4	NC		
3	IO_L33N_3/VREF_3		AE3	NC		
3	IO_L33P_3		AE4	NC		
3	IO_L32N_3		AB7	NC		
3	IO_L32P_3		AB8	NC		
3	IO_L31N_3		AE5	NC		
3	IO_L31P_3		AF6	NC		
3	IO_L06N_3		AG1			
3	IO_L06P_3		AG2			
3	IO_L05N_3		AD5			
3	IO_L05P_3		AD6			
3	IO_L04N_3		AG3			
3	IO_L04P_3		AH4			
3	IO_L03N_3/VREF_3		AH1			
3	IO_L03P_3		AH2			
3	IO_L02N_3		AG5			
3	IO_L02P_3		AH5			
3	IO_L01N_3/VRP_3		AJ3			
3	IO_L01P_3/VRN_3		AK3			
4	IO_L01N_4/BUSY/DOUT(1)		AG6			
4	IO_L01P_4/INIT_B		AF7			
4	IO_L02N_4/D0/DIN(1)		AC9			
4	IO_L02P_4/D1		AD9			
4	IO_L03N_4/D2		AG7			
4	IO_L03P_4/D3		AH7			

Table 9: **FF896 — XC2VP7, XC2VP20, XC2VPX20, and XC2VP30**

Bank	Pin Description		Pin Number	No Connects		
	Virtex-II Pro devices	XC2VPX20 (if Different)		XC2VP7	XC2VP20, XC2VPX20	XC2VP30
4	IO_L05_4/No_Pair		AD8			
4	IO_L06N_4/VRP_4		AG8			
4	IO_L06P_4/VRN_4		AH8			
4	IO_L07N_4		AC10			
4	IO_L07P_4/VREF_4		AD10			
4	IO_L08N_4		AE7			
4	IO_L08P_4		AE8			
4	IO_L09N_4		AJ8			
4	IO_L09P_4/VREF_4		AK8			
4	IO_L37N_4		AC11			
4	IO_L37P_4		AD11			
4	IO_L38N_4		AF8			
4	IO_L38P_4		AF9			
4	IO_L39N_4		AF10			
4	IO_L39P_4		AG10			
4	IO_L43N_4		AC12			
4	IO_L43P_4		AD12			
4	IO_L44N_4		AE9			
4	IO_L44P_4		AE10			
4	IO_L45N_4		AH9			
4	IO_L45P_4/VREF_4		AJ9			
4	IO_L46N_4		AC13	NC		
4	IO_L46P_4		AD13	NC		
4	IO_L47N_4		AE11	NC		
4	IO_L47P_4		AE12	NC		
4	IO_L48N_4		AH10	NC		
4	IO_L48P_4		AH11	NC		
4	IO_L49N_4		AB14	NC		
4	IO_L49P_4		AC14	NC		
4	IO_L50_4/No_Pair		AF11	NC		
4	IO_L53_4/No_Pair		AG11	NC		
4	IO_L54N_4		AJ10	NC		
4	IO_L54P_4		AK10	NC		
4	IO_L56N_4		AF12	NC		
4	IO_L56P_4		AF13	NC		
4	IO_L57N_4		AG13	NC		

Table 9: **FF896 — XC2VP7, XC2VP20, XC2VPX20, and XC2VP30**

Bank	Pin Description		Pin Number	No Connects		
	Virtex-II Pro devices	XC2VPX20 (if Different)		XC2VP7	XC2VP20, XC2VPX20	XC2VP30
4	IO_L57P_4/VREF_4		AH13	NC		
4	IO_L67N_4		AB15			
4	IO_L67P_4		AC15			
4	IO_L68N_4		AD14			
4	IO_L68P_4		AE14			
4	IO_L69N_4		AF14			
4	IO_L69P_4/VREF_4		AG14			
4	IO_L73N_4		AD15			
4	IO_L73P_4		AE15			
4	IO_L74N_4/GCLK3S		AF15			
4	IO_L74P_4/GCLK2P		AG15			
4	IO_L75N_4/GCLK1S		AH15			
4	IO_L75P_4/GCLK0P		AJ15			
5	IO_L75N_5/GCLK7S	BREFCLKN	AJ16			
5	IO_L75P_5/GCLK6P	BREFCLKP	AH16			
5	IO_L74N_5/GCLK5S		AG16			
5	IO_L74P_5/GCLK4P		AF16			
5	IO_L73N_5		AE16			
5	IO_L73P_5		AD16			
5	IO_L69N_5/VREF_5		AG17			
5	IO_L69P_5		AF17			
5	IO_L68N_5		AE17			
5	IO_L68P_5		AD17			
5	IO_L67N_5		AC16			
5	IO_L67P_5		AB16			
5	IO_L57N_5/VREF_5		AH18	NC		
5	IO_L57P_5		AG18	NC		
5	IO_L56N_5		AF18	NC		
5	IO_L56P_5		AF19	NC		
5	IO_L54N_5		AK21	NC		
5	IO_L54P_5		AJ21	NC		
5	IO_L53_5/No_Pair		AG20	NC		
5	IO_L50_5/No_Pair		AF20	NC		
5	IO_L49N_5		AC17	NC		
5	IO_L49P_5		AB17	NC		

Table 9: **FF896 — XC2VP7, XC2VP20, XC2VPX20, and XC2VP30**

Bank	Pin Description		Pin Number	No Connects		
	Virtex-II Pro devices	XC2VPX20 (if Different)		XC2VP7	XC2VP20, XC2VPX20	XC2VP30
5	IO_L48N_5		AH20	NC		
5	IO_L48P_5		AH21	NC		
5	IO_L47N_5		AE19	NC		
5	IO_L47P_5		AE20	NC		
5	IO_L46N_5		AD18	NC		
5	IO_L46P_5		AC18	NC		
5	IO_L45N_5/VREF_5		AJ22			
5	IO_L45P_5		AH22			
5	IO_L44N_5		AE21			
5	IO_L44P_5		AE22			
5	IO_L43N_5		AD19			
5	IO_L43P_5		AC19			
5	IO_L39N_5		AG21			
5	IO_L39P_5		AF21			
5	IO_L38N_5		AF22			
5	IO_L38P_5		AF23			
5	IO_L37N_5		AD20			
5	IO_L37P_5		AC20			
5	IO_L09N_5/VREF_5		AK23			
5	IO_L09P_5		AJ23			
5	IO_L08N_5		AE23			
5	IO_L08P_5		AE24			
5	IO_L07N_5/VREF_5		AD21			
5	IO_L07P_5		AC21			
5	IO_L06N_5/VRP_5		AH23			
5	IO_L06P_5/VRN_5		AG23			
5	IO_L05_5/No_Pair		AD23			
5	IO_L03N_5/D4		AH24			
5	IO_L03P_5/D5		AG24			
5	IO_L02N_5/D6		AD22			
5	IO_L02P_5/D7		AC22			
5	IO_L01N_5/RDWR_B		AF24			
5	IO_L01P_5/CS_B		AG25			
6	IO_L01P_6/VRN_6		AK28			
6	IO_L01N_6/VRP_6		AJ28			

Table 9: **FF896 — XC2VP7, XC2VP20, XC2VPX20, and XC2VP30**

Bank	Pin Description		Pin Number	No Connects		
	Virtex-II Pro devices	XC2VPX20 (if Different)		XC2VP7	XC2VP20, XC2VPX20	XC2VP30
6	IO_L02P_6		AH26			
6	IO_L02N_6		AG26			
6	IO_L03P_6		AH29			
6	IO_L03N_6/VREF_6		AH30			
6	IO_L04P_6		AH27			
6	IO_L04N_6		AG28			
6	IO_L05P_6		AD25			
6	IO_L05N_6		AD26			
6	IO_L06P_6		AG29			
6	IO_L06N_6		AG30			
6	IO_L31P_6		AF25	NC		
6	IO_L31N_6		AE26	NC		
6	IO_L32P_6		AB23	NC		
6	IO_L32N_6		AB24	NC		
6	IO_L33P_6		AE27	NC		
6	IO_L33N_6/VREF_6		AE28	NC		
6	IO_L34P_6		AF27	NC		
6	IO_L34N_6		AF28	NC		
6	IO_L35P_6		AC25	NC		
6	IO_L35N_6		AC26	NC		
6	IO_L36P_6		AF29	NC		
6	IO_L36N_6		AF30	NC		
6	IO_L37P_6		AD27	NC		
6	IO_L37N_6		AD28	NC		
6	IO_L38P_6		AA23	NC		
6	IO_L38N_6		AA24	NC		
6	IO_L39P_6		AE29	NC		
6	IO_L39N_6/VREF_6		AE30	NC		
6	IO_L40P_6		AB25	NC		
6	IO_L40N_6		AB26	NC		
6	IO_L41P_6		Y23	NC		
6	IO_L41N_6		Y24	NC		
6	IO_L42P_6		AD29	NC		
6	IO_L42N_6		AD30	NC		
6	IO_L43P_6		AC27			
6	IO_L43N_6		AC28			

Table 9: **FF896 — XC2VP7, XC2VP20, XC2VP30, and XC2VP30**

Bank	Pin Description		Pin Number	No Connects		
	Virtex-II Pro devices	XC2VPX20 (if Different)		XC2VP7	XC2VP20, XC2VPX20	XC2VP30
6	IO_L44P_6		AA25			
6	IO_L44N_6		AA26			
6	IO_L45P_6		AC29			
6	IO_L45N_6/VREF_6		AB29			
6	IO_L46P_6		AB27			
6	IO_L46N_6		AB28			
6	IO_L47P_6		W23			
6	IO_L47N_6		W24			
6	IO_L48P_6		AA27			
6	IO_L48N_6		AA28			
6	IO_L49P_6		Y26			
6	IO_L49N_6		Y27			
6	IO_L50P_6		W25			
6	IO_L50N_6		W26			
6	IO_L51P_6		AB30			
6	IO_L51N_6/VREF_6		AA30			
6	IO_L52P_6		W27			
6	IO_L52N_6		W28			
6	IO_L53P_6		V23			
6	IO_L53N_6		V24			
6	IO_L54P_6		AA29			
6	IO_L54N_6		Y29			
6	IO_L55P_6		V25			
6	IO_L55N_6		V26			
6	IO_L56P_6		U23			
6	IO_L56N_6		U24			
6	IO_L57P_6		Y30			
6	IO_L57N_6/VREF_6		W30			
6	IO_L58P_6		V27			
6	IO_L58N_6		V28			
6	IO_L59P_6		U22			
6	IO_L59N_6		T22			
6	IO_L60P_6		W29			
6	IO_L60N_6		V29			
6	IO_L85P_6		U26			
6	IO_L85N_6		U27			

Table 9: **FF896 — XC2VP7, XC2VP20, XC2VPX20, and XC2VP30**

Bank	Pin Description		Pin Number	No Connects		
	Virtex-II Pro devices	XC2VPX20 (if Different)		XC2VP7	XC2VP20, XC2VPX20	XC2VP30
6	IO_L86P_6		T23			
6	IO_L86N_6		T24			
6	IO_L87P_6		U28			
6	IO_L87N_6/VREF_6		U29			
6	IO_L88P_6		T27			
6	IO_L88N_6		T28			
6	IO_L89P_6		T25			
6	IO_L89N_6		T26			
6	IO_L90P_6		V30			
6	IO_L90N_6		U30			
7	IO_L90P_7		R28			
7	IO_L90N_7		R27			
7	IO_L89P_7		R26			
7	IO_L89N_7		R25			
7	IO_L88P_7		T29			
7	IO_L88N_7/VREF_7		R29			
7	IO_L87P_7		P27			
7	IO_L87N_7		P26			
7	IO_L86P_7		R24			
7	IO_L86N_7		R23			
7	IO_L85P_7		P29			
7	IO_L85N_7		P28			
7	IO_L60P_7		N28			
7	IO_L60N_7		N27			
7	IO_L59P_7		P24			
7	IO_L59N_7		P23			
7	IO_L58P_7		P30			
7	IO_L58N_7/VREF_7		N30			
7	IO_L57P_7		M28			
7	IO_L57N_7		M27			
7	IO_L56P_7		R22			
7	IO_L56N_7		P22			
7	IO_L55P_7		N29			
7	IO_L55N_7		M29			
7	IO_L54P_7		L27			

Table 9: **FF896 — XC2VP7, XC2VP20, XC2VPX20, and XC2VP30**

Bank	Pin Description		Pin Number	No Connects		
	Virtex-II Pro devices	XC2VPX20 (if Different)		XC2VP7	XC2VP20, XC2VPX20	XC2VP30
7	IO_L54N_7		L26			
7	IO_L53P_7		N26			
7	IO_L53N_7		N25			
7	IO_L52P_7		M30			
7	IO_L52N_7/VREF_7		L30			
7	IO_L51P_7		K28			
7	IO_L51N_7		K27			
7	IO_L50P_7		N24			
7	IO_L50N_7		N23			
7	IO_L49P_7		L29			
7	IO_L49N_7		K29			
7	IO_L48P_7		J28			
7	IO_L48N_7		J27			
7	IO_L47P_7		M26			
7	IO_L47N_7		M25			
7	IO_L46P_7		K30			
7	IO_L46N_7/VREF_7		J30			
7	IO_L45P_7		K26			
7	IO_L45N_7		K25			
7	IO_L44P_7		M24			
7	IO_L44N_7		M23			
7	IO_L43P_7		J29			
7	IO_L43N_7		H29			
7	IO_L42P_7		H28	NC		
7	IO_L42N_7		H27	NC		
7	IO_L41P_7		L24	NC		
7	IO_L41N_7		L23	NC		
7	IO_L40P_7		G30	NC		
7	IO_L40N_7/VREF_7		G29	NC		
7	IO_L39P_7		G28	NC		
7	IO_L39N_7		G27	NC		
7	IO_L38P_7		J26	NC		
7	IO_L38N_7		J25	NC		
7	IO_L37P_7		F30	NC		
7	IO_L37N_7		F29	NC		
7	IO_L36P_7		F28	NC		

Table 9: **FF896 — XC2VP7, XC2VP20, XC2VPX20, and XC2VP30**

Bank	Pin Description		Pin Number	No Connects		
	Virtex-II Pro devices	XC2VPX20 (if Different)		XC2VP7	XC2VP20, XC2VPX20	XC2VP30
7	IO_L36N_7		F27	NC		
7	IO_L35P_7		K24	NC		
7	IO_L35N_7		K23	NC		
7	IO_L34P_7		E30	NC		
7	IO_L34N_7/VREF_7		E29	NC		
7	IO_L33P_7		E28	NC		
7	IO_L33N_7		E27	NC		
7	IO_L32P_7		H26	NC		
7	IO_L32N_7		H25	NC		
7	IO_L31P_7		D30	NC		
7	IO_L31N_7		D29	NC		
7	IO_L06P_7		D28			
7	IO_L06N_7		C27			
7	IO_L05P_7		J24			
7	IO_L05N_7		J23			
7	IO_L04P_7		C30			
7	IO_L04N_7/VREF_7		C29			
7	IO_L03P_7		D26			
7	IO_L03N_7		C26			
7	IO_L02P_7		G26			
7	IO_L02N_7		G25			
7	IO_L01P_7/VRN_7		B28			
7	IO_L01N_7/VRP_7		A28			
0	VCCO_0		K21			
0	VCCO_0		K20			
0	VCCO_0		K19			
0	VCCO_0		K18			
0	VCCO_0		K17			
0	VCCO_0		K16			
0	VCCO_0		J21			
0	VCCO_0		J20			
0	VCCO_0		J19			
0	VCCO_0		J18			
1	VCCO_1		K15			
1	VCCO_1		K14			

Table 9: **FF896 — XC2VP7, XC2VP20, XC2VPX20, and XC2VP30**

Bank	Pin Description		Pin Number	No Connects		
	Virtex-II Pro devices	XC2VPX20 (if Different)		XC2VP7	XC2VP20, XC2VPX20	XC2VP30
1	VCCO_1		K13			
1	VCCO_1		K12			
1	VCCO_1		K11			
1	VCCO_1		K10			
1	VCCO_1		J13			
1	VCCO_1		J12			
1	VCCO_1		J11			
1	VCCO_1		J10			
2	VCCO_2		R10			
2	VCCO_2		P10			
2	VCCO_2		N10			
2	VCCO_2		N9			
2	VCCO_2		M10			
2	VCCO_2		M9			
2	VCCO_2		L10			
2	VCCO_2		L9			
2	VCCO_2		K9			
2	VCCO_2		J9			
3	VCCO_3		AB9			
3	VCCO_3		AA9			
3	VCCO_3		Y10			
3	VCCO_3		Y9			
3	VCCO_3		W10			
3	VCCO_3		W9			
3	VCCO_3		V10			
3	VCCO_3		V9			
3	VCCO_3		U10			
3	VCCO_3		T10			
4	VCCO_4		AB13			
4	VCCO_4		AB12			
4	VCCO_4		AB11			
4	VCCO_4		AB10			
4	VCCO_4		AA15			
4	VCCO_4		AA14			
4	VCCO_4		AA13			
4	VCCO_4		AA12			

Table 9: **FF896 — XC2VP7, XC2VP20, XC2VPX20, and XC2VP30**

Bank	Pin Description		Pin Number	No Connects		
	Virtex-II Pro devices	XC2VPX20 (if Different)		XC2VP7	XC2VP20, XC2VPX20	XC2VP30
4	VCCO_4		AA11			
4	VCCO_4		AA10			
5	VCCO_5		AB21			
5	VCCO_5		AB20			
5	VCCO_5		AB19			
5	VCCO_5		AB18			
5	VCCO_5		AA21			
5	VCCO_5		AA20			
5	VCCO_5		AA19			
5	VCCO_5		AA18			
5	VCCO_5		AA17			
5	VCCO_5		AA16			
6	VCCO_6		AB22			
6	VCCO_6		AA22			
6	VCCO_6		Y22			
6	VCCO_6		Y21			
6	VCCO_6		W22			
6	VCCO_6		W21			
6	VCCO_6		V22			
6	VCCO_6		V21			
6	VCCO_6		U21			
6	VCCO_6		T21			
7	VCCO_7		R21			
7	VCCO_7		P21			
7	VCCO_7		N22			
7	VCCO_7		N21			
7	VCCO_7		M22			
7	VCCO_7		M21			
7	VCCO_7		L22			
7	VCCO_7		L21			
7	VCCO_7		K22			
7	VCCO_7		J22			
N/A	CCLK		AC7			
N/A	PROG_B		G24			
N/A	DONE		AC8			

Table 9: **FF896 — XC2VP7, XC2VP20, XC2VPX20, and XC2VP30**

Bank	Pin Description		Pin Number	No Connects		
	Virtex-II Pro devices	XC2VPX20 (if Different)		XC2VP7	XC2VP20, XC2VPX20	XC2VP30
N/A	M0		AD24			
N/A	M1		AC24			
N/A	M2		AC23			
N/A	TCK		G7			
N/A	TDI		F26			
N/A	TDO		F5			
N/A	TMS		H8			
N/A	PWRDWN_B		AD7			
N/A	HSWAP_EN		H23			
N/A	RSVD		D6			
N/A	VBATT		H7			
N/A	DXP		H24			
N/A	DXN		D25			
N/A	AVCCAUXTX4		B26			
N/A	VTTXPAD4		B27			
N/A	TXNPAD4		A27			
N/A	TXPPAD4		A26			
N/A	GNDA4		C25			
N/A	RXPPAD4		A25			
N/A	RXNPAD4		A24			
N/A	VTRXPAD4		B25			
N/A	AVCCAUXRX4		B24			
N/A	AVCCAUXTX6		B19			
N/A	VTTXPAD6		B20			
N/A	TXNPAD6		A20			
N/A	TXPPAD6		A19			
N/A	GNDA6		C19			
N/A	RXPPAD6		A18			
N/A	RXNPAD6		A17			
N/A	VTRXPAD6		B18			
N/A	AVCCAUXRX6		B17			
N/A	AVCCAUXTX7		B13			
N/A	VTTXPAD7		B14			
N/A	TXNPAD7		A14			
N/A	TXPPAD7		A13			
N/A	GNDA7		C12			

Table 9: **FF896 — XC2VP7, XC2VP20, XC2VPX20, and XC2VP30**

Bank	Pin Description		Pin Number	No Connects		
	Virtex-II Pro devices	XC2VPX20 (if Different)		XC2VP7	XC2VP20, XC2VPX20	XC2VP30
N/A	RXPPAD7		A12			
N/A	RXNPAD7		A11			
N/A	VTRXPAD7		B12			
N/A	AVCCAUXRX7		B11			
N/A	AVCCAUXTX9		B6			
N/A	VTTXPAD9		B7			
N/A	TXNPAD9		A7			
N/A	TXPPAD9		A6			
N/A	GNDA9		C6			
N/A	RXPPAD9		A5			
N/A	RXNPAD9		A4			
N/A	VTRXPAD9		B5			
N/A	AVCCAUXRX9		B4			
N/A	AVCCAUXRX16		AJ4			
N/A	VTRXPAD16		AJ5			
N/A	RXNPAD16		AK4			
N/A	RXPPAD16		AK5			
N/A	GNDA16		AH6			
N/A	TXPPAD16		AK6			
N/A	TXNPAD16		AK7			
N/A	VTTXPAD16		AJ7			
N/A	AVCCAUXTX16		AJ6			
N/A	AVCCAUXRX18		AJ11			
N/A	VTRXPAD18		AJ12			
N/A	RXNPAD18		AK11			
N/A	RXPPAD18		AK12			
N/A	GNDA18		AH12			
N/A	TXPPAD18		AK13			
N/A	TXNPAD18		AK14			
N/A	VTTXPAD18		AJ14			
N/A	AVCCAUXTX18		AJ13			
N/A	AVCCAUXRX19		AJ17			
N/A	VTRXPAD19		AJ18			
N/A	RXNPAD19		AK17			
N/A	RXPPAD19		AK18			
N/A	GNDA19		AH19			

Table 9: **FF896 — XC2VP7, XC2VP20, XC2VPX20, and XC2VP30**

Bank	Pin Description		Pin Number	No Connects		
	Virtex-II Pro devices	XC2VPX20 (if Different)		XC2VP7	XC2VP20, XC2VPX20	XC2VP30
N/A	TXPPAD19		AK19			
N/A	TXNPAD19		AK20			
N/A	VTTXPAD19		AJ20			
N/A	AVCCAUXTX19		AJ19			
N/A	AVCCAUXRX21		AJ24			
N/A	VTRXPAD21		AJ25			
N/A	RXNPAD21		AK24			
N/A	RXPPAD21		AK25			
N/A	GNDA21		AH25			
N/A	TXPPAD21		AK26			
N/A	TXNPAD21		AK27			
N/A	VTTXPAD21		AJ27			
N/A	AVCCAUXTX21		AJ26			
N/A	VCCAUX		AK29			
N/A	VCCAUX		AK16			
N/A	VCCAUX		AK15			
N/A	VCCAUX		AK2			
N/A	VCCAUX		AJ30			
N/A	VCCAUX		AJ1			
N/A	VCCAUX		T30			
N/A	VCCAUX		T1			
N/A	VCCAUX		R30			
N/A	VCCAUX		R1			
N/A	VCCAUX		B30			
N/A	VCCAUX		B1			
N/A	VCCAUX		A29			
N/A	VCCAUX		A16			
N/A	VCCAUX		A15			
N/A	VCCAUX		A2			
N/A	VCCINT		Y19			
N/A	VCCINT		Y18			
N/A	VCCINT		Y17			
N/A	VCCINT		Y16			
N/A	VCCINT		Y15			
N/A	VCCINT		Y14			

Table 9: **FF896 — XC2VP7, XC2VP20, XC2VPX20, and XC2VP30**

Bank	Pin Description		Pin Number	No Connects		
	Virtex-II Pro devices	XC2VPX20 (if Different)		XC2VP7	XC2VP20, XC2VPX20	XC2VP30
N/A	VCCINT		Y13			
N/A	VCCINT		Y12			
N/A	VCCINT		W20			
N/A	VCCINT		W11			
N/A	VCCINT		V20			
N/A	VCCINT		V11			
N/A	VCCINT		U20			
N/A	VCCINT		U11			
N/A	VCCINT		T20			
N/A	VCCINT		T11			
N/A	VCCINT		R20			
N/A	VCCINT		R11			
N/A	VCCINT		P20			
N/A	VCCINT		P11			
N/A	VCCINT		N20			
N/A	VCCINT		N11			
N/A	VCCINT		M20			
N/A	VCCINT		M11			
N/A	VCCINT		L19			
N/A	VCCINT		L18			
N/A	VCCINT		L17			
N/A	VCCINT		L16			
N/A	VCCINT		L15			
N/A	VCCINT		L14			
N/A	VCCINT		L13			
N/A	VCCINT		L12			
N/A	GND		AK22			
N/A	GND		AK9			
N/A	GND		AJ29			
N/A	GND		AJ2			
N/A	GND		AH28			
N/A	GND		AH17			
N/A	GND		AH14			
N/A	GND		AH3			
N/A	GND		AG27			
N/A	GND		AG22			

Table 9: **FF896 — XC2VP7, XC2VP20, XC2VPX20, and XC2VP30**

Bank	Pin Description		Pin Number	No Connects		
	Virtex-II Pro devices	XC2VPX20 (if Different)		XC2VP7	XC2VP20, XC2VPX20	XC2VP30
N/A	GND		AG19			
N/A	GND		AG12			
N/A	GND		AG9			
N/A	GND		AG4			
N/A	GND		AF26			
N/A	GND		AF5			
N/A	GND		AE25			
N/A	GND		AE18			
N/A	GND		AE13			
N/A	GND		AE6			
N/A	GND		AC30			
N/A	GND		AC1			
N/A	GND		Y28			
N/A	GND		Y25			
N/A	GND		Y20			
N/A	GND		Y11			
N/A	GND		Y6			
N/A	GND		Y3			
N/A	GND		W19			
N/A	GND		W18			
N/A	GND		W17			
N/A	GND		W16			
N/A	GND		W15			
N/A	GND		W14			
N/A	GND		W13			
N/A	GND		W12			
N/A	GND		V19			
N/A	GND		V18			
N/A	GND		V17			
N/A	GND		V16			
N/A	GND		V15			
N/A	GND		V14			
N/A	GND		V13			
N/A	GND		V12			
N/A	GND		U25			
N/A	GND		U19			

Table 9: **FF896 — XC2VP7, XC2VP20, XC2VPX20, and XC2VP30**

Bank	Pin Description		Pin Number	No Connects		
	Virtex-II Pro devices	XC2VPX20 (if Different)		XC2VP7	XC2VP20, XC2VPX20	XC2VP30
N/A	GND		U18			
N/A	GND		U17			
N/A	GND		U16			
N/A	GND		U15			
N/A	GND		U14			
N/A	GND		U13			
N/A	GND		U12			
N/A	GND		U6			
N/A	GND		T19			
N/A	GND		T18			
N/A	GND		T17			
N/A	GND		T16			
N/A	GND		T15			
N/A	GND		T14			
N/A	GND		T13			
N/A	GND		T12			
N/A	GND		R19			
N/A	GND		R18			
N/A	GND		R17			
N/A	GND		R16			
N/A	GND		R15			
N/A	GND		R14			
N/A	GND		R13			
N/A	GND		R12			
N/A	GND		P25			
N/A	GND		P19			
N/A	GND		P18			
N/A	GND		P17			
N/A	GND		P16			
N/A	GND		P15			
N/A	GND		P14			
N/A	GND		P13			
N/A	GND		P12			
N/A	GND		P6			
N/A	GND		N19			
N/A	GND		N18			

Table 9: **FF896 — XC2VP7, XC2VP20, XC2VPX20, and XC2VP30**

Bank	Pin Description		Pin Number	No Connects		
	Virtex-II Pro devices	XC2VPX20 (if Different)		XC2VP7	XC2VP20, XC2VPX20	XC2VP30
N/A	GND		N17			
N/A	GND		N16			
N/A	GND		N15			
N/A	GND		N14			
N/A	GND		N13			
N/A	GND		N12			
N/A	GND		M19			
N/A	GND		M18			
N/A	GND		M17			
N/A	GND		M16			
N/A	GND		M15			
N/A	GND		M14			
N/A	GND		M13			
N/A	GND		M12			
N/A	GND		L28			
N/A	GND		L25			
N/A	GND		L20			
N/A	GND		L11			
N/A	GND		L6			
N/A	GND		L3			
N/A	GND		H30			
N/A	GND		H1			
N/A	GND		F25			
N/A	GND		F18			
N/A	GND		F13			
N/A	GND		F6			
N/A	GND		E26			
N/A	GND		E5			
N/A	GND		D27			
N/A	GND		D22			
N/A	GND		D19			
N/A	GND		D12			
N/A	GND		D9			
N/A	GND		D4			
N/A	GND		C28			
N/A	GND		C17			

Table 9: **FF896 — XC2VP7, XC2VP20, XC2VPX20, and XC2VP30**

Bank	Pin Description		Pin Number	No Connects		
	Virtex-II Pro devices	XC2VPX20 (if Different)		XC2VP7	XC2VP20, XC2VPX20	XC2VP30
N/A	GND		C14			
N/A	GND		C3			
N/A	GND		B29			
N/A	GND		B2			
N/A	GND		A22			
N/A	GND		A9			

Notes:
1. See Table 4 for an explanation of the signals available on this pin.

FF896 Flip-Chip Fine-Pitch BGA Package Specifications (1.00mm pitch)

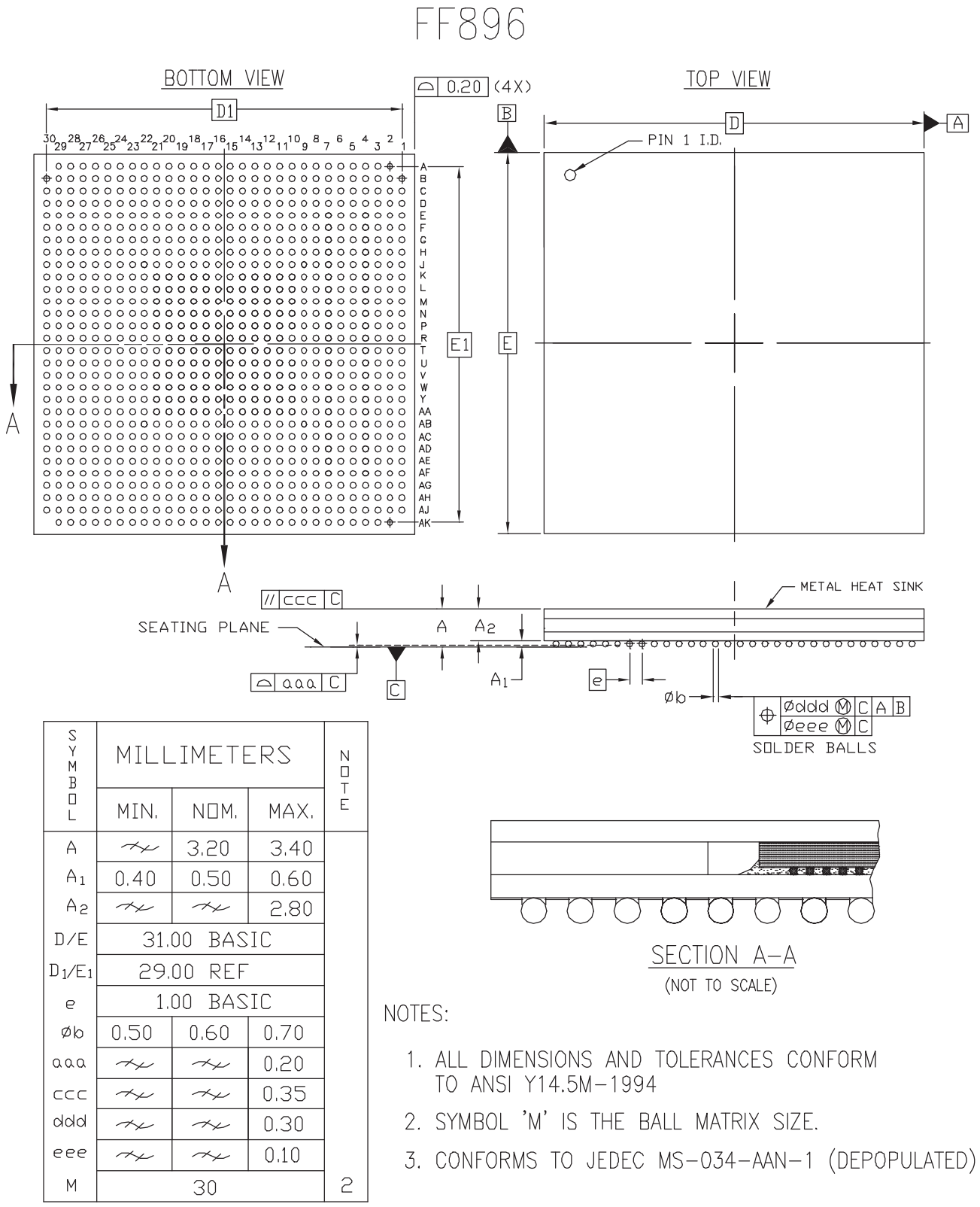

SYMBOL	MILLIMETERS			NOTE
	MIN.	NOM.	MAX.	
A		3.20	3.40	
A_1	0.40	0.50	0.60	
A_2			2.80	
D/E	31.00 BASIC			
D_1/E_1	29.00 REF			
e	1.00 BASIC			
øb	0.50	0.60	0.70	
aaa			0.20	
ccc			0.35	
ddd			0.30	
eee			0.10	
M	30			2

NOTES:

1. ALL DIMENSIONS AND TOLERANCES CONFORM TO ANSI Y14.5M–1994
2. SYMBOL 'M' IS THE BALL MATRIX SIZE.
3. CONFORMS TO JEDEC MS–034–AAN–1 (DEPOPULATED)

Figure 5: **FF896 Flip-Chip Fine-Pitch BGA Package Specifications**

FF1152 Flip-Chip Fine-Pitch BGA Package

As shown in Table 10, XC2VP20, XC2VP30, XC2VP40, and XC2VP50 Virtex-II Pro devices are available in the FF1152 flip-chip fine-pitch BGA package. Pins in each of these devices are the same, except for the differences shown in the No Connect column. Following this table are the FF1152 Flip-Chip Fine-Pitch BGA Package Specifications (1.00mm pitch).

Table 10: **FF1152 — XC2VP20, XC2VP30, XC2VP40, and XC2VP50**

Bank	Pin Description	Pin Number	No Connects			
			XC2VP20	XC2VP30	XC2VP40	XC2VP50
0	IO_L01N_0/VRP_0	E29				
0	IO_L01P_0/VRN_0	E28				
0	IO_L02N_0	H26				
0	IO_L02P_0	G26				
0	IO_L03N_0	H25				
0	IO_L03P_0/VREF_0	G25				
0	IO_L05_0/No_Pair	J25				
0	IO_L06N_0	K24				
0	IO_L06P_0	J24				
0	IO_L07N_0	F26				
0	IO_L07P_0	E26				
0	IO_L08N_0	D30				
0	IO_L08P_0	D29				
0	IO_L09N_0	K23				
0	IO_L09P_0/VREF_0	J23				
0	IO_L19N_0	F24	NC	NC		
0	IO_L19P_0	E24	NC	NC		
0	IO_L20N_0	D28	NC	NC		
0	IO_L20P_0	C28	NC	NC		
0	IO_L21N_0	H24	NC	NC		
0	IO_L21P_0	G24	NC	NC		
0	IO_L25N_0	G23	NC	NC		
0	IO_L25P_0	F23	NC	NC		
0	IO_L26N_0	E27	NC	NC		
0	IO_L26P_0	D27	NC	NC		
0	IO_L27N_0	K22	NC	NC		
0	IO_L27P_0/VREF_0	J22	NC	NC		
0	IO_L37N_0	H22				
0	IO_L37P_0	G22				
0	IO_L38N_0	D26				
0	IO_L38P_0	C26				
0	IO_L39N_0	K21				
0	IO_L39P_0	J21				
0	IO_L43N_0	F22				

Table 10: **FF1152 — XC2VP20, XC2VP30, XC2VP40, and XC2VP50**

Bank	Pin Description	Pin Number	No Connects			
			XC2VP20	XC2VP30	XC2VP40	XC2VP50
0	IO_L43P_0	E22				
0	IO_L44N_0	E25				
0	IO_L44P_0	D25				
0	IO_L45N_0	H21				
0	IO_L45P_0/VREF_0	G21				
0	IO_L46N_0	D22				
0	IO_L46P_0	D23				
0	IO_L47N_0	D24				
0	IO_L47P_0	C24				
0	IO_L48N_0	K20				
0	IO_L48P_0	J20				
0	IO_L49N_0	F21				
0	IO_L49P_0	E21				
0	IO_L50_0/No_Pair	C21				
0	IO_L53_0/No_Pair	C22				
0	IO_L54N_0	L19				
0	IO_L54P_0	K19				
0	IO_L55N_0	G20				
0	IO_L55P_0	F20				
0	IO_L56N_0	D21				
0	IO_L56P_0	D20				
0	IO_L57N_0	J19				
0	IO_L57P_0/VREF_0	H19				
0	IO_L67N_0	G19				
0	IO_L67P_0	F19				
0	IO_L68N_0	E19				
0	IO_L68P_0	D19				
0	IO_L69N_0	L18				
0	IO_L69P_0/VREF_0	K18				
0	IO_L73N_0	G18				
0	IO_L73P_0	F18				
0	IO_L74N_0/GCLK7P	E18				
0	IO_L74P_0/GCLK6S	D18				
0	IO_L75N_0/GCLK5P	J18				
0	IO_L75P_0/GCLK4S	H18				
1	IO_L75N_1/GCLK3P	H17				
1	IO_L75P_1/GCLK2S	J17				

Table 10: **FF1152 — XC2VP20, XC2VP30, XC2VP40, and XC2VP50**

Bank	Pin Description	Pin Number	No Connects			
			XC2VP20	XC2VP30	XC2VP40	XC2VP50
1	IO_L74N_1/GCLK1P	D17				
1	IO_L74P_1/GCLK0S	E17				
1	IO_L73N_1	F17				
1	IO_L73P_1	G17				
1	IO_L69N_1/VREF_1	K17				
1	IO_L69P_1	L17				
1	IO_L68N_1	D16				
1	IO_L68P_1	E16				
1	IO_L67N_1	F16				
1	IO_L67P_1	G16				
1	IO_L57N_1/VREF_1	H16				
1	IO_L57P_1	J16				
1	IO_L56N_1	D15				
1	IO_L56P_1	D14				
1	IO_L55N_1	F15				
1	IO_L55P_1	G15				
1	IO_L54N_1	K16				
1	IO_L54P_1	L16				
1	IO_L53_1/No_Pair	C13				
1	IO_L50_1/No_Pair	C14				
1	IO_L49N_1	E14				
1	IO_L49P_1	F14				
1	IO_L48N_1	J15				
1	IO_L48P_1	K15				
1	IO_L47N_1	C11				
1	IO_L47P_1	D11				
1	IO_L46N_1	D12				
1	IO_L46P_1	D13				
1	IO_L45N_1/VREF_1	G14				
1	IO_L45P_1	H14				
1	IO_L44N_1	D10				
1	IO_L44P_1	E10				
1	IO_L43N_1	E13				
1	IO_L43P_1	F13				
1	IO_L39N_1	J14				
1	IO_L39P_1	K14				
1	IO_L38N_1	C9				
1	IO_L38P_1	D9				

Table 10: **FF1152 — XC2VP20, XC2VP30, XC2VP40, and XC2VP50**

Bank	Pin Description	Pin Number	No Connects			
			XC2VP20	XC2VP30	XC2VP40	XC2VP50
1	IO_L37N_1	G13				
1	IO_L37P_1	H13				
1	IO_L27N_1/VREF_1	J13	NC	NC		
1	IO_L27P_1	K13	NC	NC		
1	IO_L26N_1	D8	NC	NC		
1	IO_L26P_1	E8	NC	NC		
1	IO_L25N_1	F12	NC	NC		
1	IO_L25P_1	G12	NC	NC		
1	IO_L21N_1	G11	NC	NC		
1	IO_L21P_1	H11	NC	NC		
1	IO_L20N_1	C7	NC	NC		
1	IO_L20P_1	D7	NC	NC		
1	IO_L19N_1	E11	NC	NC		
1	IO_L19P_1	F11	NC	NC		
1	IO_L09N_1/VREF_1	J12				
1	IO_L09P_1	K12				
1	IO_L08N_1	D6				
1	IO_L08P_1	D5				
1	IO_L07N_1	E9				
1	IO_L07P_1	F9				
1	IO_L06N_1	J11				
1	IO_L06P_1	K11				
1	IO_L05_1/No_Pair	J10				
1	IO_L03N_1/VREF_1	G10				
1	IO_L03P_1	H10				
1	IO_L02N_1	G9				
1	IO_L02P_1	H9				
1	IO_L01N_1/VRP_1	E7				
1	IO_L01P_1/VRN_1	E6				
2	IO_L01N_2/VRP_2	D2				
2	IO_L01P_2/VRN_2	D1				
2	IO_L02N_2	F8				
2	IO_L02P_2	F7				
2	IO_L03N_2	E4				
2	IO_L03P_2	E3				
2	IO_L04N_2/VREF_2	E2				
2	IO_L04P_2	E1				

Table 10: **FF1152 — XC2VP20, XC2VP30, XC2VP40, and XC2VP50**

Bank	Pin Description	Pin Number	No Connects			
			XC2VP20	XC2VP30	XC2VP40	XC2VP50
2	IO_L05N_2	J8				
2	IO_L05P_2	J7				
2	IO_L06N_2	F5				
2	IO_L06P_2	F4				
2	IO_L15N_2	G4	NC			
2	IO_L15P_2	G3	NC			
2	IO_L16N_2/VREF_2	G6	NC			
2	IO_L16P_2	G5	NC			
2	IO_L17N_2	F2	NC			
2	IO_L17P_2	F1	NC			
2	IO_L18N_2	L10	NC			
2	IO_L18P_2	L9	NC			
2	IO_L19N_2	H6	NC			
2	IO_L19P_2	H5	NC			
2	IO_L20N_2	G2	NC			
2	IO_L20P_2	G1	NC			
2	IO_L21N_2	J6	NC			
2	IO_L21P_2	J5	NC			
2	IO_L22N_2/VREF_2	J4	NC			
2	IO_L22P_2	J3	NC			
2	IO_L23N_2	K8	NC			
2	IO_L23P_2	K7	NC			
2	IO_L24N_2	H4	NC			
2	IO_L24P_2	H3	NC			
2	IO_L31N_2	H2				
2	IO_L31P_2	H1				
2	IO_L32N_2	M10				
2	IO_L32P_2	M9				
2	IO_L33N_2	K5				
2	IO_L33P_2	K4				
2	IO_L34N_2/VREF_2	J2				
2	IO_L34P_2	K2				
2	IO_L35N_2	L8				
2	IO_L35P_2	L7				
2	IO_L36N_2	L6				
2	IO_L36P_2	L5				
2	IO_L37N_2	K1				
2	IO_L37P_2	L1				

Table 10: **FF1152 — XC2VP20, XC2VP30, XC2VP40, and XC2VP50**

Bank	Pin Description	Pin Number	No Connects			
			XC2VP20	XC2VP30	XC2VP40	XC2VP50
2	IO_L38N_2	N10				
2	IO_L38P_2	N9				
2	IO_L39N_2	M7				
2	IO_L39P_2	M6				
2	IO_L40N_2/VREF_2	L2				
2	IO_L40P_2	M2				
2	IO_L41N_2	N8				
2	IO_L41P_2	N7				
2	IO_L42N_2	L4				
2	IO_L42P_2	L3				
2	IO_L43N_2	M4				
2	IO_L43P_2	M3				
2	IO_L44N_2	P10				
2	IO_L44P_2	P9				
2	IO_L45N_2	N6				
2	IO_L45P_2	N5				
2	IO_L46N_2/VREF_2	M1				
2	IO_L46P_2	N1				
2	IO_L47N_2	P8				
2	IO_L47P_2	P7				
2	IO_L48N_2	N4				
2	IO_L48P_2	N3				
2	IO_L49N_2	N2				
2	IO_L49P_2	P2				
2	IO_L50N_2	R10				
2	IO_L50P_2	R9				
2	IO_L51N_2	P6				
2	IO_L51P_2	P5				
2	IO_L52N_2/VREF_2	P4				
2	IO_L52P_2	P3				
2	IO_L53N_2	T11				
2	IO_L53P_2	U11				
2	IO_L54N_2	R7				
2	IO_L54P_2	R6				
2	IO_L55N_2	P1				
2	IO_L55P_2	R1				
2	IO_L56N_2	T10				
2	IO_L56P_2	T9				

Table 10: **FF1152 — XC2VP20, XC2VP30, XC2VP40, and XC2VP50**

Bank	Pin Description	Pin Number	No Connects			
			XC2VP20	XC2VP30	XC2VP40	XC2VP50
2	IO_L57N_2	R4				
2	IO_L57P_2	R3				
2	IO_L58N_2/VREF_2	R2				
2	IO_L58P_2	T2				
2	IO_L59N_2	T8				
2	IO_L59P_2	T7				
2	IO_L60N_2	T6				
2	IO_L60P_2	T5				
2	IO_L85N_2	T4				
2	IO_L85P_2	T3				
2	IO_L86N_2	U10				
2	IO_L86P_2	U9				
2	IO_L87N_2	U6				
2	IO_L87P_2	U5				
2	IO_L88N_2/VREF_2	U2				
2	IO_L88P_2	V2				
2	IO_L89N_2	U8				
2	IO_L89P_2	U7				
2	IO_L90N_2	U4				
2	IO_L90P_2	U3				
3	IO_L90N_3	V3				
3	IO_L90P_3	V4				
3	IO_L89N_3	V7				
3	IO_L89P_3	V8				
3	IO_L88N_3	V5				
3	IO_L88P_3	V6				
3	IO_L87N_3/VREF_3	W2				
3	IO_L87P_3	Y2				
3	IO_L86N_3	V9				
3	IO_L86P_3	V10				
3	IO_L85N_3	W3				
3	IO_L85P_3	W4				
3	IO_L60N_3	Y1				
3	IO_L60P_3	AA1				
3	IO_L59N_3	V11				
3	IO_L59P_3	W11				
3	IO_L58N_3	W5				

Table 10: **FF1152 — XC2VP20, XC2VP30, XC2VP40, and XC2VP50**

Bank	Pin Description	Pin Number	No Connects			
			XC2VP20	XC2VP30	XC2VP40	XC2VP50
3	IO_L58P_3	W6				
3	IO_L57N_3/VREF_3	Y3				
3	IO_L57P_3	Y4				
3	IO_L56N_3	W7				
3	IO_L56P_3	W8				
3	IO_L55N_3	Y6				
3	IO_L55P_3	Y7				
3	IO_L54N_3	AA2				
3	IO_L54P_3	AB2				
3	IO_L53N_3	W9				
3	IO_L53P_3	W10				
3	IO_L52N_3	AA3				
3	IO_L52P_3	AA4				
3	IO_L51N_3/VREF_3	AB1				
3	IO_L51P_3	AC1				
3	IO_L50N_3	Y9				
3	IO_L50P_3	Y10				
3	IO_L49N_3	AA5				
3	IO_L49P_3	AA6				
3	IO_L48N_3	AB3				
3	IO_L48P_3	AB4				
3	IO_L47N_3	AA7				
3	IO_L47P_3	AA8				
3	IO_L46N_3	AB5				
3	IO_L46P_3	AB6				
3	IO_L45N_3/VREF_3	AC2				
3	IO_L45P_3	AD2				
3	IO_L44N_3	AA9				
3	IO_L44P_3	AA10				
3	IO_L43N_3	AC3				
3	IO_L43P_3	AC4				
3	IO_L42N_3	AD1				
3	IO_L42P_3	AE1				
3	IO_L41N_3	AB7				
3	IO_L41P_3	AB8				
3	IO_L40N_3	AC6				
3	IO_L40P_3	AC7				
3	IO_L39N_3/VREF_3	AD3				

Table 10: **FF1152 — XC2VP20, XC2VP30, XC2VP40, and XC2VP50**

Bank	Pin Description	Pin Number	No Connects			
			XC2VP20	XC2VP30	XC2VP40	XC2VP50
3	IO_L39P_3	AD4				
3	IO_L38N_3	AB9				
3	IO_L38P_3	AB10				
3	IO_L37N_3	AD5				
3	IO_L37P_3	AD6				
3	IO_L36N_3	AE2				
3	IO_L36P_3	AF2				
3	IO_L35N_3	AD7				
3	IO_L35P_3	AD8				
3	IO_L34N_3	AE4				
3	IO_L34P_3	AE5				
3	IO_L33N_3/VREF_3	AG1				
3	IO_L33P_3	AG2				
3	IO_L32N_3	AC9				
3	IO_L32P_3	AC10				
3	IO_L31N_3	AF3				
3	IO_L31P_3	AF4				
3	IO_L24N_3	AH1	NC			
3	IO_L24P_3	AH2	NC			
3	IO_L23N_3	AE7	NC			
3	IO_L23P_3	AE8	NC			
3	IO_L22N_3	AF5	NC			
3	IO_L22P_3	AF6	NC			
3	IO_L21N_3/VREF_3	AG3	NC			
3	IO_L21P_3	AG4	NC			
3	IO_L20N_3	AD9	NC			
3	IO_L20P_3	AD10	NC			
3	IO_L19N_3	AH3	NC			
3	IO_L19P_3	AH4	NC			
3	IO_L18N_3	AJ1	NC			
3	IO_L18P_3	AJ2	NC			
3	IO_L17N_3	AF7	NC			
3	IO_L17P_3	AF8	NC			
3	IO_L16N_3	AK1	NC			
3	IO_L16P_3	AK2	NC			
3	IO_L15N_3/VREF_3	AG5	NC			
3	IO_L15P_3	AG6	NC			
3	IO_L06N_3	AL1				

Table 10: **FF1152 — XC2VP20, XC2VP30, XC2VP40, and XC2VP50**

Bank	Pin Description	Pin Number	No Connects			
			XC2VP20	XC2VP30	XC2VP40	XC2VP50
3	IO_L06P_3	AL2				
3	IO_L05N_3	AG7				
3	IO_L05P_3	AH8				
3	IO_L04N_3	AH5				
3	IO_L04P_3	AH6				
3	IO_L03N_3/VREF_3	AK3				
3	IO_L03P_3	AK4				
3	IO_L02N_3	AJ7				
3	IO_L02P_3	AJ8				
3	IO_L01N_3/VRP_3	AJ4				
3	IO_L01P_3/VRN_3	AJ5				
4	IO_L01N_4/BUSY/DOUT(1)	AL5				
4	IO_L01P_4/INIT_B	AL6				
4	IO_L02N_4/D0/DIN(1)	AG9				
4	IO_L02P_4/D1	AH9				
4	IO_L03N_4/D2	AK6				
4	IO_L03P_4/D3	AK7				
4	IO_L05_4/No_Pair	AF10				
4	IO_L06N_4/VRP_4	AL7				
4	IO_L06P_4/VRN_4	AM7				
4	IO_L07N_4	AE11				
4	IO_L07P_4/VREF_4	AF11				
4	IO_L08N_4	AG10				
4	IO_L08P_4	AH10				
4	IO_L09N_4	AK8				
4	IO_L09P_4/VREF_4	AL8				
4	IO_L19N_4	AE12	NC	NC		
4	IO_L19P_4	AF12	NC	NC		
4	IO_L20N_4	AJ9	NC	NC		
4	IO_L20P_4	AK9	NC	NC		
4	IO_L21N_4	AL9	NC	NC		
4	IO_L21P_4	AM9	NC	NC		
4	IO_L25N_4	AG11	NC	NC		
4	IO_L25P_4	AH11	NC	NC		
4	IO_L26N_4	AH12	NC	NC		
4	IO_L26P_4	AJ12	NC	NC		
4	IO_L27N_4	AK10	NC	NC		

Table 10: **FF1152 — XC2VP20, XC2VP30, XC2VP40, and XC2VP50**

Bank	Pin Description	Pin Number	No Connects			
			XC2VP20	XC2VP30	XC2VP40	XC2VP50
4	IO_L27P_4/VREF_4	AL10	NC	NC		
4	IO_L37N_4	AE13				
4	IO_L37P_4	AF13				
4	IO_L38N_4	AG13				
4	IO_L38P_4	AH13				
4	IO_L39N_4	AJ11				
4	IO_L39P_4	AK11				
4	IO_L43N_4	AE14				
4	IO_L43P_4	AF14				
4	IO_L44N_4	AJ13				
4	IO_L44P_4	AK13				
4	IO_L45N_4	AL11				
4	IO_L45P_4/VREF_4	AM11				
4	IO_L46N_4	AE15				
4	IO_L46P_4	AF15				
4	IO_L47N_4	AG14				
4	IO_L47P_4	AH14				
4	IO_L48N_4	AL13				
4	IO_L48P_4	AL12				
4	IO_L49N_4	AD16				
4	IO_L49P_4	AE16				
4	IO_L50_4/No_Pair	AJ14				
4	IO_L53_4/No_Pair	AK14				
4	IO_L54N_4	AM14				
4	IO_L54P_4	AM13				
4	IO_L55N_4	AF16				
4	IO_L55P_4	AG16				
4	IO_L56N_4	AH15				
4	IO_L56P_4	AJ15				
4	IO_L57N_4	AL14				
4	IO_L57P_4/VREF_4	AL15				
4	IO_L67N_4	AD17				
4	IO_L67P_4	AE17				
4	IO_L68N_4	AH16				
4	IO_L68P_4	AJ16				
4	IO_L69N_4	AK16				
4	IO_L69P_4/VREF_4	AL16				
4	IO_L73N_4	AF17				

Table 10: **FF1152 — XC2VP20, XC2VP30, XC2VP40, and XC2VP50**

Bank	Pin Description	Pin Number	No Connects			
			XC2VP20	XC2VP30	XC2VP40	XC2VP50
4	IO_L73P_4	AG17				
4	IO_L74N_4/GCLK3S	AH17				
4	IO_L74P_4/GCLK2P	AJ17				
4	IO_L75N_4/GCLK1S	AK17				
4	IO_L75P_4/GCLK0P	AL17				
5	IO_L75N_5/GCLK7S	AL18				
5	IO_L75P_5/GCLK6P	AK18				
5	IO_L74N_5/GCLK5S	AJ18				
5	IO_L74P_5/GCLK4P	AH18				
5	IO_L73N_5	AG18				
5	IO_L73P_5	AF18				
5	IO_L69N_5/VREF_5	AL19				
5	IO_L69P_5	AK19				
5	IO_L68N_5	AJ19				
5	IO_L68P_5	AH19				
5	IO_L67N_5	AE18				
5	IO_L67P_5	AD18				
5	IO_L57N_5/VREF_5	AL20				
5	IO_L57P_5	AL21				
5	IO_L56N_5	AJ20				
5	IO_L56P_5	AH20				
5	IO_L55N_5	AG19				
5	IO_L55P_5	AF19				
5	IO_L54N_5	AM22				
5	IO_L54P_5	AM21				
5	IO_L53_5/No_Pair	AK21				
5	IO_L50_5/No_Pair	AJ21				
5	IO_L49N_5	AE19				
5	IO_L49P_5	AD19				
5	IO_L48N_5	AL23				
5	IO_L48P_5	AL22				
5	IO_L47N_5	AH21				
5	IO_L47P_5	AG21				
5	IO_L46N_5	AF20				
5	IO_L46P_5	AE20				
5	IO_L45N_5/VREF_5	AM24				
5	IO_L45P_5	AL24				

Table 10: **FF1152 — XC2VP20, XC2VP30, XC2VP40, and XC2VP50**

Bank	Pin Description	Pin Number	No Connects			
			XC2VP20	XC2VP30	XC2VP40	XC2VP50
5	IO_L44N_5	AK22				
5	IO_L44P_5	AJ22				
5	IO_L43N_5	AF21				
5	IO_L43P_5	AE21				
5	IO_L39N_5	AK24				
5	IO_L39P_5	AJ24				
5	IO_L38N_5	AH22				
5	IO_L38P_5	AG22				
5	IO_L37N_5	AF22				
5	IO_L37P_5	AE22				
5	IO_L27N_5/VREF_5	AL25	NC	NC		
5	IO_L27P_5	AK25	NC	NC		
5	IO_L26N_5	AJ23	NC	NC		
5	IO_L26P_5	AH23	NC	NC		
5	IO_L25N_5	AH24	NC	NC		
5	IO_L25P_5	AG24	NC	NC		
5	IO_L21N_5	AM26	NC	NC		
5	IO_L21P_5	AL26	NC	NC		
5	IO_L20N_5	AK26	NC	NC		
5	IO_L20P_5	AJ26	NC	NC		
5	IO_L19N_5	AF23	NC	NC		
5	IO_L19P_5	AE23	NC	NC		
5	IO_L09N_5/VREF_5	AL27				
5	IO_L09P_5	AK27				
5	IO_L08N_5	AH25				
5	IO_L08P_5	AG25				
5	IO_L07N_5/VREF_5	AF24				
5	IO_L07P_5	AE24				
5	IO_L06N_5/VRP_5	AM28				
5	IO_L06P_5/VRN_5	AL28				
5	IO_L05_5/No_Pair	AF25				
5	IO_L03N_5/D4	AK28				
5	IO_L03P_5/D5	AK29				
5	IO_L02N_5/D6	AH26				
5	IO_L02P_5/D7	AG26				
5	IO_L01N_5/RDWR_B	AL29				
5	IO_L01P_5/CS_B	AL30				

Table 10: **FF1152 — XC2VP20, XC2VP30, XC2VP40, and XC2VP50**

Bank	Pin Description	Pin Number	No Connects			
			XC2VP20	XC2VP30	XC2VP40	XC2VP50
6	IO_L01P_6/VRN_6	AJ30				
6	IO_L01N_6/VRP_6	AJ31				
6	IO_L02P_6	AJ27				
6	IO_L02N_6	AJ28				
6	IO_L03P_6	AK31				
6	IO_L03N_6/VREF_6	AK32				
6	IO_L04P_6	AH29				
6	IO_L04N_6	AH30				
6	IO_L05P_6	AH27				
6	IO_L05N_6	AG28				
6	IO_L06P_6	AL33				
6	IO_L06N_6	AL34				
6	IO_L15P_6	AG29	NC			
6	IO_L15N_6/VREF_6	AG30	NC			
6	IO_L16P_6	AK33	NC			
6	IO_L16N_6	AK34	NC			
6	IO_L17P_6	AF27	NC			
6	IO_L17N_6	AF28	NC			
6	IO_L18P_6	AJ33	NC			
6	IO_L18N_6	AJ34	NC			
6	IO_L19P_6	AH31	NC			
6	IO_L19N_6	AH32	NC			
6	IO_L20P_6	AD25	NC			
6	IO_L20N_6	AD26	NC			
6	IO_L21P_6	AG31	NC			
6	IO_L21N_6/VREF_6	AG32	NC			
6	IO_L22P_6	AF29	NC			
6	IO_L22N_6	AF30	NC			
6	IO_L23P_6	AE27	NC			
6	IO_L23N_6	AE28	NC			
6	IO_L24P_6	AH33	NC			
6	IO_L24N_6	AH34	NC			
6	IO_L31P_6	AF31				
6	IO_L31N_6	AF32				
6	IO_L32P_6	AC25				
6	IO_L32N_6	AC26				
6	IO_L33P_6	AG33				
6	IO_L33N_6/VREF_6	AG34				

Table 10: **FF1152 — XC2VP20, XC2VP30, XC2VP40, and XC2VP50**

Bank	Pin Description	Pin Number	No Connects			
			XC2VP20	XC2VP30	XC2VP40	XC2VP50
6	IO_L34P_6	AE30				
6	IO_L34N_6	AE31				
6	IO_L35P_6	AD27				
6	IO_L35N_6	AD28				
6	IO_L36P_6	AF33				
6	IO_L36N_6	AE33				
6	IO_L37P_6	AD29				
6	IO_L37N_6	AD30				
6	IO_L38P_6	AB25				
6	IO_L38N_6	AB26				
6	IO_L39P_6	AD31				
6	IO_L39N_6/VREF_6	AD32				
6	IO_L40P_6	AC28				
6	IO_L40N_6	AC29				
6	IO_L41P_6	AB27				
6	IO_L41N_6	AB28				
6	IO_L42P_6	AE34				
6	IO_L42N_6	AD34				
6	IO_L43P_6	AC31				
6	IO_L43N_6	AC32				
6	IO_L44P_6	AA25				
6	IO_L44N_6	AA26				
6	IO_L45P_6	AD33				
6	IO_L45N_6/VREF_6	AC33				
6	IO_L46P_6	AB29				
6	IO_L46N_6	AB30				
6	IO_L47P_6	AA27				
6	IO_L47N_6	AA28				
6	IO_L48P_6	AB31				
6	IO_L48N_6	AB32				
6	IO_L49P_6	AA29				
6	IO_L49N_6	AA30				
6	IO_L50P_6	Y25				
6	IO_L50N_6	Y26				
6	IO_L51P_6	AC34				
6	IO_L51N_6/VREF_6	AB34				
6	IO_L52P_6	AA31				
6	IO_L52N_6	AA32				

Table 10: **FF1152 — XC2VP20, XC2VP30, XC2VP40, and XC2VP50**

Bank	Pin Description	Pin Number	No Connects			
			XC2VP20	XC2VP30	XC2VP40	XC2VP50
6	IO_L53P_6	W25				
6	IO_L53N_6	W26				
6	IO_L54P_6	AB33				
6	IO_L54N_6	AA33				
6	IO_L55P_6	Y28				
6	IO_L55N_6	Y29				
6	IO_L56P_6	W27				
6	IO_L56N_6	W28				
6	IO_L57P_6	Y31				
6	IO_L57N_6/VREF_6	Y32				
6	IO_L58P_6	W29				
6	IO_L58N_6	W30				
6	IO_L59P_6	W24				
6	IO_L59N_6	V24				
6	IO_L60P_6	AA34				
6	IO_L60N_6	Y34				
6	IO_L85P_6	W31				
6	IO_L85N_6	W32				
6	IO_L86P_6	V25				
6	IO_L86N_6	V26				
6	IO_L87P_6	Y33				
6	IO_L87N_6/VREF_6	W33				
6	IO_L88P_6	V29				
6	IO_L88N_6	V30				
6	IO_L89P_6	V27				
6	IO_L89N_6	V28				
6	IO_L90P_6	V31				
6	IO_L90N_6	V32				
7	IO_L90P_7	U32				
7	IO_L90N_7	U31				
7	IO_L89P_7	U28				
7	IO_L89N_7	U27				
7	IO_L88P_7	V33				
7	IO_L88N_7/VREF_7	U33				
7	IO_L87P_7	U30				
7	IO_L87N_7	U29				
7	IO_L86P_7	U26				

Table 10: **FF1152 — XC2VP20, XC2VP30, XC2VP40, and XC2VP50**

Bank	Pin Description	Pin Number	No Connects			
			XC2VP20	XC2VP30	XC2VP40	XC2VP50
7	IO_L86N_7	U25				
7	IO_L85P_7	T32				
7	IO_L85N_7	T31				
7	IO_L60P_7	T30				
7	IO_L60N_7	T29				
7	IO_L59P_7	T28				
7	IO_L59N_7	T27				
7	IO_L58P_7	T33				
7	IO_L58N_7/VREF_7	R33				
7	IO_L57P_7	R32				
7	IO_L57N_7	R31				
7	IO_L56P_7	T26				
7	IO_L56N_7	T25				
7	IO_L55P_7	R34				
7	IO_L55N_7	P34				
7	IO_L54P_7	R29				
7	IO_L54N_7	R28				
7	IO_L53P_7	U24				
7	IO_L53N_7	T24				
7	IO_L52P_7	P32				
7	IO_L52N_7/VREF_7	P31				
7	IO_L51P_7	P30				
7	IO_L51N_7	P29				
7	IO_L50P_7	R26				
7	IO_L50N_7	R25				
7	IO_L49P_7	P33				
7	IO_L49N_7	N33				
7	IO_L48P_7	N32				
7	IO_L48N_7	N31				
7	IO_L47P_7	P28				
7	IO_L47N_7	P27				
7	IO_L46P_7	N34				
7	IO_L46N_7/VREF_7	M34				
7	IO_L45P_7	N30				
7	IO_L45N_7	N29				
7	IO_L44P_7	P26				
7	IO_L44N_7	P25				
7	IO_L43P_7	M32				

Table 10: **FF1152 — XC2VP20, XC2VP30, XC2VP40, and XC2VP50**

Bank	Pin Description	Pin Number	No Connects			
			XC2VP20	XC2VP30	XC2VP40	XC2VP50
7	IO_L43N_7	M31				
7	IO_L42P_7	L32				
7	IO_L42N_7	L31				
7	IO_L41P_7	N28				
7	IO_L41N_7	N27				
7	IO_L40P_7	M33				
7	IO_L40N_7/VREF_7	L33				
7	IO_L39P_7	M29				
7	IO_L39N_7	M28				
7	IO_L38P_7	N26				
7	IO_L38N_7	N25				
7	IO_L37P_7	L34				
7	IO_L37N_7	K34				
7	IO_L36P_7	L30				
7	IO_L36N_7	L29				
7	IO_L35P_7	L28				
7	IO_L35N_7	L27				
7	IO_L34P_7	K33				
7	IO_L34N_7/VREF_7	J33				
7	IO_L33P_7	K31				
7	IO_L33N_7	K30				
7	IO_L32P_7	M26				
7	IO_L32N_7	M25				
7	IO_L31P_7	H34				
7	IO_L31N_7	H33				
7	IO_L24P_7	H32	NC			
7	IO_L24N_7	H31	NC			
7	IO_L23P_7	K28	NC			
7	IO_L23N_7	K27	NC			
7	IO_L22P_7	J32	NC			
7	IO_L22N_7/VREF_7	J31	NC			
7	IO_L21P_7	J30	NC			
7	IO_L21N_7	J29	NC			
7	IO_L20P_7	G34	NC			
7	IO_L20N_7	G33	NC			
7	IO_L19P_7	H30	NC			
7	IO_L19N_7	H29	NC			
7	IO_L18P_7	L26	NC			

Table 10: **FF1152 — XC2VP20, XC2VP30, XC2VP40, and XC2VP50**

Bank	Pin Description	Pin Number	No Connects			
			XC2VP20	XC2VP30	XC2VP40	XC2VP50
7	IO_L18N_7	L25	NC			
7	IO_L17P_7	F34	NC			
7	IO_L17N_7	F33	NC			
7	IO_L16P_7	G30	NC			
7	IO_L16N_7/VREF_7	G29	NC			
7	IO_L15P_7	G32	NC			
7	IO_L15N_7	G31	NC			
7	IO_L06P_7	F31				
7	IO_L06N_7	F30				
7	IO_L05P_7	J28				
7	IO_L05N_7	J27				
7	IO_L04P_7	E34				
7	IO_L04N_7/VREF_7	E33				
7	IO_L03P_7	E32				
7	IO_L03N_7	E31				
7	IO_L02P_7	F28				
7	IO_L02N_7	F27				
7	IO_L01P_7/VRN_7	D34				
7	IO_L01N_7/VRP_7	D33				
0	VCCO_0	C29				
0	VCCO_0	E20				
0	VCCO_0	F25				
0	VCCO_0	L20				
0	VCCO_0	L21				
0	VCCO_0	L22				
0	VCCO_0	L23				
0	VCCO_0	M18				
0	VCCO_0	M19				
0	VCCO_0	M20				
0	VCCO_0	M21				
0	VCCO_0	M22				
1	VCCO_1	C6				
1	VCCO_1	E15				
1	VCCO_1	F10				
1	VCCO_1	L12				
1	VCCO_1	L13				
1	VCCO_1	L14				

Table 10: **FF1152 — XC2VP20, XC2VP30, XC2VP40, and XC2VP50**

Bank	Pin Description	Pin Number	No Connects			
			XC2VP20	XC2VP30	XC2VP40	XC2VP50
1	VCCO_1	L15				
1	VCCO_1	M13				
1	VCCO_1	M14				
1	VCCO_1	M15				
1	VCCO_1	M16				
1	VCCO_1	M17				
2	VCCO_2	F3				
2	VCCO_2	K6				
2	VCCO_2	M11				
2	VCCO_2	N11				
2	VCCO_2	N12				
2	VCCO_2	P11				
2	VCCO_2	P12				
2	VCCO_2	R5				
2	VCCO_2	R11				
2	VCCO_2	R12				
2	VCCO_2	T12				
2	VCCO_2	U12				
3	VCCO_3	V12				
3	VCCO_3	W12				
3	VCCO_3	Y5				
3	VCCO_3	Y11				
3	VCCO_3	Y12				
3	VCCO_3	AA11				
3	VCCO_3	AA12				
3	VCCO_3	AB11				
3	VCCO_3	AB12				
3	VCCO_3	AC11				
3	VCCO_3	AE6				
3	VCCO_3	AJ3				
4	VCCO_4	AC13				
4	VCCO_4	AC14				
4	VCCO_4	AC15				
4	VCCO_4	AC16				
4	VCCO_4	AC17				
4	VCCO_4	AD12				
4	VCCO_4	AD13				
4	VCCO_4	AD14				

Table 10: **FF1152 — XC2VP20, XC2VP30, XC2VP40, and XC2VP50**

Bank	Pin Description	Pin Number	No Connects			
			XC2VP20	XC2VP30	XC2VP40	XC2VP50
4	VCCO_4	AD15				
4	VCCO_4	AJ10				
4	VCCO_4	AK15				
4	VCCO_4	AM6				
5	VCCO_5	AC18				
5	VCCO_5	AC19				
5	VCCO_5	AC20				
5	VCCO_5	AC21				
5	VCCO_5	AC22				
5	VCCO_5	AD20				
5	VCCO_5	AD21				
5	VCCO_5	AD22				
5	VCCO_5	AD23				
5	VCCO_5	AJ25				
5	VCCO_5	AK20				
5	VCCO_5	AM29				
6	VCCO_6	V23				
6	VCCO_6	W23				
6	VCCO_6	Y23				
6	VCCO_6	Y24				
6	VCCO_6	Y30				
6	VCCO_6	AA23				
6	VCCO_6	AA24				
6	VCCO_6	AB23				
6	VCCO_6	AB24				
6	VCCO_6	AC24				
6	VCCO_6	AE29				
6	VCCO_6	AJ32				
7	VCCO_7	F32				
7	VCCO_7	K29				
7	VCCO_7	M24				
7	VCCO_7	N23				
7	VCCO_7	N24				
7	VCCO_7	P23				
7	VCCO_7	P24				
7	VCCO_7	R23				
7	VCCO_7	R24				
7	VCCO_7	R30				

Table 10: **FF1152 — XC2VP20, XC2VP30, XC2VP40, and XC2VP50**

Bank	Pin Description	Pin Number	No Connects			
			XC2VP20	XC2VP30	XC2VP40	XC2VP50
7	VCCO_7	T23				
7	VCCO_7	U23				
N/A	CCLK	AE9				
N/A	PROG_B	J26				
N/A	DONE	AE10				
N/A	M0	AF26				
N/A	M1	AE26				
N/A	M2	AE25				
N/A	TCK	J9				
N/A	TDI	H28				
N/A	TDO	H7				
N/A	TMS	K10				
N/A	PWRDWN_B	AF9				
N/A	HSWAP_EN	K25				
N/A	RSVD	G8				
N/A	VBATT	K9				
N/A	DXP	K26				
N/A	DXN	G27				
N/A	AVCCAUXTX2	B32	NC	NC		
N/A	VTTXPAD2	B33	NC	NC		
N/A	TXNPAD2	A33	NC	NC		
N/A	TXPPAD2	A32	NC	NC		
N/A	GNDA2	C30	NC	NC		
N/A	RXPPAD2	A31	NC	NC		
N/A	RXNPAD2	A30	NC	NC		
N/A	VTRXPAD2	B31	NC	NC		
N/A	AVCCAUXRX2	B30	NC	NC		
N/A	AVCCAUXTX4	B28				
N/A	VTTXPAD4	B29				
N/A	TXNPAD4	A29				
N/A	TXPPAD4	A28				
N/A	GNDA4	C27				
N/A	RXPPAD4	A27				
N/A	RXNPAD4	A26				
N/A	VTRXPAD4	B27				
N/A	AVCCAUXRX4	B26				
N/A	AVCCAUXTX5	B24	NC	NC	NC	

Table 10: **FF1152 — XC2VP20, XC2VP30, XC2VP40, and XC2VP50**

Bank	Pin Description	Pin Number	No Connects			
			XC2VP20	XC2VP30	XC2VP40	XC2VP50
N/A	VTTXPAD5	B25	NC	NC	NC	
N/A	TXNPAD5	A25	NC	NC	NC	
N/A	TXPPAD5	A24	NC	NC	NC	
N/A	GNDA5	C23	NC	NC	NC	
N/A	RXPPAD5	A23	NC	NC	NC	
N/A	RXNPAD5	A22	NC	NC	NC	
N/A	VTRXPAD5	B23	NC	NC	NC	
N/A	AVCCAUXRX5	B22	NC	NC	NC	
N/A	AVCCAUXTX6	B20				
N/A	VTTXPAD6	B21				
N/A	TXNPAD6	A21				
N/A	TXPPAD6	A20				
N/A	GNDA6	C20				
N/A	RXPPAD6	A19				
N/A	RXNPAD6	A18				
N/A	VTRXPAD6	B19				
N/A	AVCCAUXRX6	B18				
N/A	AVCCAUXTX7	B16				
N/A	VTTXPAD7	B17				
N/A	TXNPAD7	A17				
N/A	TXPPAD7	A16				
N/A	GNDA7	C15				
N/A	RXPPAD7	A15				
N/A	RXNPAD7	A14				
N/A	VTRXPAD7	B15				
N/A	AVCCAUXRX7	B14				
N/A	AVCCAUXTX8	B12	NC	NC	NC	
N/A	VTTXPAD8	B13	NC	NC	NC	
N/A	TXNPAD8	A13	NC	NC	NC	
N/A	TXPPAD8	A12	NC	NC	NC	
N/A	GNDA8	C12	NC	NC	NC	
N/A	RXPPAD8	A11	NC	NC	NC	
N/A	RXNPAD8	A10	NC	NC	NC	
N/A	VTRXPAD8	B11	NC	NC	NC	
N/A	AVCCAUXRX8	B10	NC	NC	NC	
N/A	AVCCAUXTX9	B8				
N/A	VTTXPAD9	B9				
N/A	TXNPAD9	A9				

Table 10: **FF1152 — XC2VP20, XC2VP30, XC2VP40, and XC2VP50**

Bank	Pin Description	Pin Number	No Connects			
			XC2VP20	XC2VP30	XC2VP40	XC2VP50
N/A	TXPPAD9	A8				
N/A	GNDA9	C8				
N/A	RXPPAD9	A7				
N/A	RXNPAD9	A6				
N/A	VTRXPAD9	B7				
N/A	AVCCAUXRX9	B6				
N/A	AVCCAUXTX11	B4	NC	NC		
N/A	VTTXPAD11	B5	NC	NC		
N/A	TXNPAD11	A5	NC	NC		
N/A	TXPPAD11	A4	NC	NC		
N/A	GNDA11	C5	NC	NC		
N/A	RXPPAD11	A3	NC	NC		
N/A	RXNPAD11	A2	NC	NC		
N/A	VTRXPAD11	B3	NC	NC		
N/A	AVCCAUXRX11	B2	NC	NC		
N/A	AVCCAUXRX14	AN2	NC	NC		
N/A	VTRXPAD14	AN3	NC	NC		
N/A	RXNPAD14	AP2	NC	NC		
N/A	RXPPAD14	AP3	NC	NC		
N/A	GNDA14	AM5	NC	NC		
N/A	TXPPAD14	AP4	NC	NC		
N/A	TXNPAD14	AP5	NC	NC		
N/A	VTTXPAD14	AN5	NC	NC		
N/A	AVCCAUXTX14	AN4	NC	NC		
N/A	AVCCAUXRX16	AN6				
N/A	VTRXPAD16	AN7				
N/A	RXNPAD16	AP6				
N/A	RXPPAD16	AP7				
N/A	GNDA16	AM8				
N/A	TXPPAD16	AP8				
N/A	TXNPAD16	AP9				
N/A	VTTXPAD16	AN9				
N/A	AVCCAUXTX16	AN8				
N/A	AVCCAUXRX17	AN10	NC	NC	NC	
N/A	VTRXPAD17	AN11	NC	NC	NC	
N/A	RXNPAD17	AP10	NC	NC	NC	
N/A	RXPPAD17	AP11	NC	NC	NC	
N/A	GNDA17	AM12	NC	NC	NC	

Table 10: **FF1152 — XC2VP20, XC2VP30, XC2VP40, and XC2VP50**

Bank	Pin Description	Pin Number	No Connects			
			XC2VP20	XC2VP30	XC2VP40	XC2VP50
N/A	TXPPAD17	AP12	NC	NC	NC	
N/A	TXNPAD17	AP13	NC	NC	NC	
N/A	VTTXPAD17	AN13	NC	NC	NC	
N/A	AVCCAUXTX17	AN12	NC	NC	NC	
N/A	AVCCAUXRX18	AN14				
N/A	VTRXPAD18	AN15				
N/A	RXNPAD18	AP14				
N/A	RXPPAD18	AP15				
N/A	GNDA18	AM15				
N/A	TXPPAD18	AP16				
N/A	TXNPAD18	AP17				
N/A	VTTXPAD18	AN17				
N/A	AVCCAUXTX18	AN16				
N/A	AVCCAUXRX19	AN18				
N/A	VTRXPAD19	AN19				
N/A	RXNPAD19	AP18				
N/A	RXPPAD19	AP19				
N/A	GNDA19	AM20				
N/A	TXPPAD19	AP20				
N/A	TXNPAD19	AP21				
N/A	VTTXPAD19	AN21				
N/A	AVCCAUXTX19	AN20				
N/A	AVCCAUXRX20	AN22	NC	NC	NC	
N/A	VTRXPAD20	AN23	NC	NC	NC	
N/A	RXNPAD20	AP22	NC	NC	NC	
N/A	RXPPAD20	AP23	NC	NC	NC	
N/A	GNDA20	AM23	NC	NC	NC	
N/A	TXPPAD20	AP24	NC	NC	NC	
N/A	TXNPAD20	AP25	NC	NC	NC	
N/A	VTTXPAD20	AN25	NC	NC	NC	
N/A	AVCCAUXTX20	AN24	NC	NC	NC	
N/A	AVCCAUXRX21	AN26				
N/A	VTRXPAD21	AN27				
N/A	RXNPAD21	AP26				
N/A	RXPPAD21	AP27				
N/A	GNDA21	AM27				
N/A	TXPPAD21	AP28				
N/A	TXNPAD21	AP29				

Table 10: **FF1152 — XC2VP20, XC2VP30, XC2VP40, and XC2VP50**

Bank	Pin Description	Pin Number	No Connects			
			XC2VP20	XC2VP30	XC2VP40	XC2VP50
N/A	VTTXPAD21	AN29				
N/A	AVCCAUXTX21	AN28				
N/A	AVCCAUXRX23	AN30	NC	NC		
N/A	VTRXPAD23	AN31	NC	NC		
N/A	RXNPAD23	AP30	NC	NC		
N/A	RXPPAD23	AP31	NC	NC		
N/A	GNDA23	AM30	NC	NC		
N/A	TXPPAD23	AP32	NC	NC		
N/A	TXNPAD23	AP33	NC	NC		
N/A	VTTXPAD23	AN33	NC	NC		
N/A	AVCCAUXTX23	AN32	NC	NC		
N/A	VCCINT	L11				
N/A	VCCINT	L24				
N/A	VCCINT	M12				
N/A	VCCINT	M23				
N/A	VCCINT	N13				
N/A	VCCINT	N14				
N/A	VCCINT	N15				
N/A	VCCINT	N16				
N/A	VCCINT	N17				
N/A	VCCINT	N18				
N/A	VCCINT	N19				
N/A	VCCINT	N20				
N/A	VCCINT	N21				
N/A	VCCINT	N22				
N/A	VCCINT	P13				
N/A	VCCINT	P22				
N/A	VCCINT	R13				
N/A	VCCINT	R22				
N/A	VCCINT	T13				
N/A	VCCINT	T22				
N/A	VCCINT	U13				
N/A	VCCINT	U22				
N/A	VCCINT	V13				
N/A	VCCINT	V22				
N/A	VCCINT	W13				
N/A	VCCINT	W22				

Table 10: **FF1152 — XC2VP20, XC2VP30, XC2VP40, and XC2VP50**

Bank	Pin Description	Pin Number	No Connects			
			XC2VP20	XC2VP30	XC2VP40	XC2VP50
N/A	VCCINT	Y13				
N/A	VCCINT	Y22				
N/A	VCCINT	AA13				
N/A	VCCINT	AA22				
N/A	VCCINT	AB13				
N/A	VCCINT	AB14				
N/A	VCCINT	AB15				
N/A	VCCINT	AB16				
N/A	VCCINT	AB17				
N/A	VCCINT	AB18				
N/A	VCCINT	AB19				
N/A	VCCINT	AB20				
N/A	VCCINT	AB21				
N/A	VCCINT	AB22				
N/A	VCCINT	AC12				
N/A	VCCINT	AC23				
N/A	VCCINT	AD11				
N/A	VCCINT	AD24				
N/A	VCCAUX	C3				
N/A	VCCAUX	C4				
N/A	VCCAUX	C17				
N/A	VCCAUX	C18				
N/A	VCCAUX	C31				
N/A	VCCAUX	C32				
N/A	VCCAUX	D3				
N/A	VCCAUX	D32				
N/A	VCCAUX	U1				
N/A	VCCAUX	V1				
N/A	VCCAUX	U34				
N/A	VCCAUX	V34				
N/A	VCCAUX	AL3				
N/A	VCCAUX	AL32				
N/A	VCCAUX	AM3				
N/A	VCCAUX	AM4				
N/A	VCCAUX	AM17				
N/A	VCCAUX	AM18				
N/A	VCCAUX	AM31				
N/A	VCCAUX	AM32				

Table 10: **FF1152 — XC2VP20, XC2VP30, XC2VP40, and XC2VP50**

Bank	Pin Description	Pin Number	No Connects			
			XC2VP20	XC2VP30	XC2VP40	XC2VP50
N/A	GND	AF34				
N/A	GND	B34				
N/A	GND	C1				
N/A	GND	C2				
N/A	GND	C10				
N/A	GND	C16				
N/A	GND	C19				
N/A	GND	C25				
N/A	GND	C33				
N/A	GND	C34				
N/A	GND	D4				
N/A	GND	D31				
N/A	GND	E5				
N/A	GND	E12				
N/A	GND	E23				
N/A	GND	E30				
N/A	GND	F6				
N/A	GND	F29				
N/A	GND	G7				
N/A	GND	G28				
N/A	GND	B1				
N/A	GND	H8				
N/A	GND	H12				
N/A	GND	H15				
N/A	GND	H20				
N/A	GND	J1				
N/A	GND	H27				
N/A	GND	AF1				
N/A	GND	K3				
N/A	GND	K32				
N/A	GND	M5				
N/A	GND	M8				
N/A	GND	M27				
N/A	GND	M30				
N/A	GND	P14				
N/A	GND	P15				
N/A	GND	P16				

Table 10: **FF1152 — XC2VP20, XC2VP30, XC2VP40, and XC2VP50**

Bank	Pin Description	Pin Number	No Connects			
			XC2VP20	XC2VP30	XC2VP40	XC2VP50
N/A	GND	P17				
N/A	GND	P18				
N/A	GND	P19				
N/A	GND	P20				
N/A	GND	P21				
N/A	GND	R8				
N/A	GND	R14				
N/A	GND	R15				
N/A	GND	R16				
N/A	GND	R17				
N/A	GND	R18				
N/A	GND	R19				
N/A	GND	R20				
N/A	GND	R21				
N/A	GND	R27				
N/A	GND	T1				
N/A	GND	T14				
N/A	GND	T15				
N/A	GND	T16				
N/A	GND	T17				
N/A	GND	T18				
N/A	GND	T19				
N/A	GND	T20				
N/A	GND	T21				
N/A	GND	T34				
N/A	GND	U14				
N/A	GND	U15				
N/A	GND	U16				
N/A	GND	U17				
N/A	GND	U18				
N/A	GND	U19				
N/A	GND	U20				
N/A	GND	U21				
N/A	GND	V14				
N/A	GND	V15				
N/A	GND	V16				
N/A	GND	V17				
N/A	GND	V18				

Table 10: **FF1152 — XC2VP20, XC2VP30, XC2VP40, and XC2VP50**

Bank	Pin Description	Pin Number	No Connects			
			XC2VP20	XC2VP30	XC2VP40	XC2VP50
N/A	GND	V19				
N/A	GND	V20				
N/A	GND	V21				
N/A	GND	W1				
N/A	GND	W14				
N/A	GND	W15				
N/A	GND	W16				
N/A	GND	W17				
N/A	GND	W18				
N/A	GND	W19				
N/A	GND	W20				
N/A	GND	W21				
N/A	GND	W34				
N/A	GND	Y8				
N/A	GND	Y14				
N/A	GND	Y15				
N/A	GND	Y16				
N/A	GND	Y17				
N/A	GND	Y18				
N/A	GND	Y19				
N/A	GND	Y20				
N/A	GND	Y21				
N/A	GND	Y27				
N/A	GND	AA14				
N/A	GND	AA15				
N/A	GND	AA16				
N/A	GND	AA17				
N/A	GND	AA18				
N/A	GND	AA19				
N/A	GND	AA20				
N/A	GND	AA21				
N/A	GND	AC5				
N/A	GND	AC8				
N/A	GND	AC27				
N/A	GND	AC30				
N/A	GND	AE3				
N/A	GND	AE32				
N/A	GND	H23				

Table 10: **FF1152 — XC2VP20, XC2VP30, XC2VP40, and XC2VP50**

Bank	Pin Description	Pin Number	No Connects			
			XC2VP20	XC2VP30	XC2VP40	XC2VP50
N/A	GND	AG8				
N/A	GND	AG12				
N/A	GND	AG15				
N/A	GND	AG20				
N/A	GND	AG23				
N/A	GND	AG27				
N/A	GND	J34				
N/A	GND	AH7				
N/A	GND	AH28				
N/A	GND	AJ6				
N/A	GND	AJ29				
N/A	GND	AK5				
N/A	GND	AK12				
N/A	GND	AK23				
N/A	GND	AK30				
N/A	GND	AL4				
N/A	GND	AL31				
N/A	GND	AM1				
N/A	GND	AM2				
N/A	GND	AM10				
N/A	GND	AM16				
N/A	GND	AM19				
N/A	GND	AM25				
N/A	GND	AM33				
N/A	GND	AM34				
N/A	GND	AN1				
N/A	GND	AN34				

Notes:
1. See Table 4 for an explanation of the signals available on this pin.

FF1152 Flip-Chip Fine-Pitch BGA Package Specifications (1.00mm pitch)

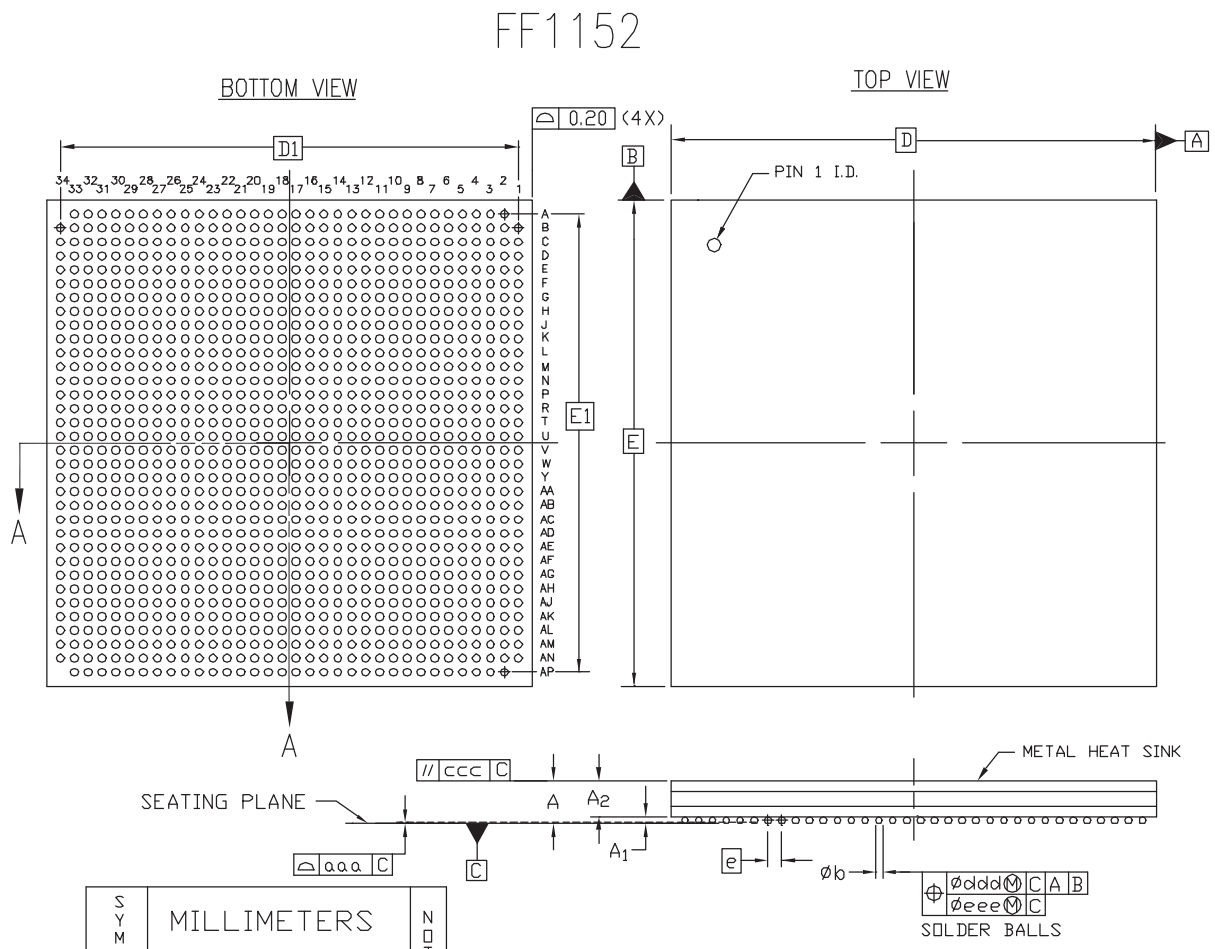

SYMBOL	MILLIMETERS			NOTE
	MIN.	NOM.	MAX.	
A	---	3.20	3.40	
A_1	0.40	0.50	0.60	
A_2	---	---	2.80	
D/E	35.00 BASIC			
D_1/E_1	33.00 REF			
e	1.00 BASIC			
øb	0.50	0.60	0.70	
aaa	---	---	0.20	
ccc	---	---	0.35	
ddd	---	---	0.30	
eee	---	---	0.10	
M	34			2

NOTES:
1. ALL DIMENSIONS AND TOLERANCES CONFORM TO ANSI Y14.5M–1994
2. SYMBOL 'M' IS THE BALL MATRIX SIZE.
3. CONFORMS TO JEDEC MS–034–AAR–1 (DEPOPULATED)

Figure 6: **FF1152 Flip-Chip Fine-Pitch BGA Package Specifications**

FF1148 Flip-Chip Fine-Pitch BGA Package

As shown in Table 11, XC2VP40 and XC2VP50 Virtex-II Pro devices are available in the FF1148 flip-chip fine-pitch BGA package. Pins in each of these devices are the same, except for the differences shown in the No Connect column. Following this table are the FF1148 Flip-Chip Fine-Pitch BGA Package Specifications (1.00mm pitch).

Table 11: **FF1148 — XC2VP40 and XC2VP50**

Bank	Pin Description	Pin Number	No Connects	
			XC2VP40	XC2VP50
0	IO_L01N_0/VRP_0	E25		
0	IO_L01P_0/VRN_0	F25		
0	IO_L02N_0	J24		
0	IO_L02P_0	K24		
0	IO_L03N_0	C25		
0	IO_L03P_0/VREF_0	D25		
0	IO_L05_0/No_Pair	G25		
0	IO_L06N_0	A25		
0	IO_L06P_0	B25		
0	IO_L07N_0	G24		
0	IO_L07P_0	G23		
0	IO_L08N_0	H23		
0	IO_L08P_0	H22		
0	IO_L09N_0	E24		
0	IO_L09P_0/VREF_0	F24		
0	IO_L19N_0	C24		
0	IO_L19P_0	C23		
0	IO_L20N_0	J23		
0	IO_L20P_0	K23		
0	IO_L21N_0	A24		
0	IO_L21P_0	B24		
0	IO_L25N_0	E23		
0	IO_L25P_0	F23		
0	IO_L26N_0	K22		
0	IO_L26P_0	L22		
0	IO_L27N_0	D23		
0	IO_L27P_0/VREF_0	D22		
0	IO_L37N_0	A23		
0	IO_L37P_0	B23		
0	IO_L38N_0	J21		
0	IO_L38P_0	J20		
0	IO_L39N_0	F22		
0	IO_L39P_0	G22		

Table 11: **FF1148 — XC2VP40 and XC2VP50**

Bank	Pin Description	Pin Number	No Connects	
			XC2VP40	XC2VP50
0	IO_L43N_0	B22		
0	IO_L43P_0	C22		
0	IO_L44N_0	K21		
0	IO_L44P_0	L21		
0	IO_L45N_0	G21		
0	IO_L45P_0/VREF_0	H21		
0	IO_L46N_0	E21		
0	IO_L46P_0	F21		
0	IO_L47N_0	K20		
0	IO_L47P_0	L20		
0	IO_L48N_0	C21		
0	IO_L48P_0	D21		
0	IO_L49N_0	A21		
0	IO_L49P_0	B21		
0	IO_L50_0/No_Pair	G20		
0	IO_L53_0/No_Pair	H19		
0	IO_L54N_0	E20		
0	IO_L54P_0	F20		
0	IO_L55N_0	C20		
0	IO_L55P_0	D19		
0	IO_L56N_0	K19		
0	IO_L56P_0	L19		
0	IO_L57N_0	A20		
0	IO_L57P_0/VREF_0	B20		
0	IO_L66N_0	F19	NC	
0	IO_L66P_0/VREF_0	G19	NC	
0	IO_L67N_0	B19		
0	IO_L67P_0	C19		
0	IO_L68N_0	H18		
0	IO_L68P_0	J18		
0	IO_L69N_0	F18		
0	IO_L69P_0/VREF_0	G18		
0	IO_L73N_0	D18		
0	IO_L73P_0	E18		
0	IO_L74N_0/GCLK7P	K18		
0	IO_L74P_0/GCLK6S	L18		
0	IO_L75N_0/GCLK5P	B18		
0	IO_L75P_0/GCLK4S	C18		

Table 11: **FF1148 — XC2VP40 and XC2VP50**

Bank	Pin Description	Pin Number	No Connects	
			XC2VP40	XC2VP50
1	IO_L75N_1/GCLK3P	C17		
1	IO_L75P_1/GCLK2S	B17		
1	IO_L74N_1/GCLK1P	L17		
1	IO_L74P_1/GCLK0S	K17		
1	IO_L73N_1	E17		
1	IO_L73P_1	D17		
1	IO_L69N_1/VREF_1	G17		
1	IO_L69P_1	F17		
1	IO_L68N_1	J17		
1	IO_L68P_1	H17		
1	IO_L67N_1	C16		
1	IO_L67P_1	B16		
1	IO_L66N_1/VREF_1	G16	NC	
1	IO_L66P_1	F16	NC	
1	IO_L57N_1/VREF_1	B15		
1	IO_L57P_1	A15		
1	IO_L56N_1	L16		
1	IO_L56P_1	K16		
1	IO_L55N_1	D16		
1	IO_L55P_1	C15		
1	IO_L54N_1	F15		
1	IO_L54P_1	E15		
1	IO_L53_1/No_Pair	H16		
1	IO_L50_1/No_Pair	G15		
1	IO_L49N_1	B14		
1	IO_L49P_1	A14		
1	IO_L48N_1	D14		
1	IO_L48P_1	C14		
1	IO_L47N_1	L15		
1	IO_L47P_1	K15		
1	IO_L46N_1	F14		
1	IO_L46P_1	E14		
1	IO_L45N_1/VREF_1	H14		
1	IO_L45P_1	G14		
1	IO_L44N_1	L14		
1	IO_L44P_1	K14		
1	IO_L43N_1	C13		

Table 11: **FF1148 — XC2VP40 and XC2VP50**

Bank	Pin Description	Pin Number	No Connects	
			XC2VP40	XC2VP50
1	IO_L43P_1	B13		
1	IO_L39N_1	G13		
1	IO_L39P_1	F13		
1	IO_L38N_1	J15		
1	IO_L38P_1	J14		
1	IO_L37N_1	B12		
1	IO_L37P_1	A12		
1	IO_L27N_1/VREF_1	D13		
1	IO_L27P_1	D12		
1	IO_L26N_1	L13		
1	IO_L26P_1	K13		
1	IO_L25N_1	F12		
1	IO_L25P_1	E12		
1	IO_L21N_1	B11		
1	IO_L21P_1	A11		
1	IO_L20N_1	K12		
1	IO_L20P_1	J12		
1	IO_L19N_1	C12		
1	IO_L19P_1	C11		
1	IO_L09N_1/VREF_1	F11		
1	IO_L09P_1	E11		
1	IO_L08N_1	H13		
1	IO_L08P_1	H12		
1	IO_L07N_1	G12		
1	IO_L07P_1	G11		
1	IO_L06N_1	B10		
1	IO_L06P_1	A10		
1	IO_L05_1/No_Pair	G10		
1	IO_L03N_1/VREF_1	D10		
1	IO_L03P_1	C10		
1	IO_L02N_1	K11		
1	IO_L02P_1	J11		
1	IO_L01N_1/VRP_1	F10		
1	IO_L01P_1/VRN_1	E10		
2	IO_L01N_2/VRP_2	B8		
2	IO_L01P_2/VRN_2	B9		
2	IO_L02N_2	C9		

Table 11: **FF1148 — XC2VP40 and XC2VP50**

Bank	Pin Description	Pin Number	No Connects	
			XC2VP40	XC2VP50
2	IO_L02P_2	D9		
2	IO_L03N_2	B7		
2	IO_L03P_2	A7		
2	IO_L04N_2/VREF_2	B6		
2	IO_L04P_2	A6		
2	IO_L05N_2	E8		
2	IO_L05P_2	D8		
2	IO_L06N_2	B4		
2	IO_L06P_2	A4		
2	IO_L07N_2	B3		
2	IO_L07P_2	A3		
2	IO_L08N_2	H7		
2	IO_L08P_2	H8		
2	IO_L09N_2	C6		
2	IO_L09P_2	C7		
2	IO_L10N_2/VREF_2	C5		
2	IO_L10P_2	B5		
2	IO_L11N_2	K8		
2	IO_L11P_2	J8		
2	IO_L12N_2	C1		
2	IO_L12P_2	C2		
2	IO_L13N_2	E7		
2	IO_L13P_2	D7		
2	IO_L14N_2	J6		
2	IO_L14P_2	J7		
2	IO_L15N_2	D5		
2	IO_L15P_2	D6		
2	IO_L16N_2/VREF_2	E4		
2	IO_L16P_2	D4		
2	IO_L17N_2	L9		
2	IO_L17P_2	K9		
2	IO_L18N_2	E3		
2	IO_L18P_2	D3		
2	IO_L19N_2	D1		
2	IO_L19P_2	D2		
2	IO_L20N_2	K7		
2	IO_L20P_2	L7		
2	IO_L21N_2	F6		

Table 11: **FF1148 — XC2VP40 and XC2VP50**

Bank	Pin Description	Pin Number	No Connects	
			XC2VP40	XC2VP50
2	IO_L21P_2	E6		
2	IO_L22N_2/VREF_2	F7		
2	IO_L22P_2	F8		
2	IO_L23N_2	M10		
2	IO_L23P_2	L10		
2	IO_L24N_2	G5		
2	IO_L24P_2	F5		
2	IO_L25N_2	F3		
2	IO_L25P_2	F4		
2	IO_L26N_2	M8		
2	IO_L26P_2	M9		
2	IO_L27N_2	F1		
2	IO_L27P_2	F2		
2	IO_L28N_2/VREF_2	G6		
2	IO_L28P_2	G7		
2	IO_L29N_2	M7		
2	IO_L29P_2	N8		
2	IO_L30N_2	G3		
2	IO_L30P_2	H4		
2	IO_L31N_2	G1		
2	IO_L31P_2	G2		
2	IO_L32N_2	N10		
2	IO_L32P_2	N11		
2	IO_L33N_2	H5		
2	IO_L33P_2	H6		
2	IO_L34N_2/VREF_2	H2		
2	IO_L34P_2	H3		
2	IO_L35N_2	N6		
2	IO_L35P_2	N7		
2	IO_L36N_2	K4		
2	IO_L36P_2	J4		
2	IO_L37N_2	J2		
2	IO_L37P_2	J3		
2	IO_L38N_2	P10		
2	IO_L38P_2	P11		
2	IO_L39N_2	K5		
2	IO_L39P_2	K6		
2	IO_L40N_2/VREF_2	L3		

Table 11: **FF1148 — XC2VP40 and XC2VP50**

Bank	Pin Description	Pin Number	No Connects	
			XC2VP40	XC2VP50
2	IO_L40P_2	K3		
2	IO_L41N_2	R9		
2	IO_L41P_2	P9		
2	IO_L42N_2	K1		
2	IO_L42P_2	K2		
2	IO_L43N_2	L5		
2	IO_L43P_2	L6		
2	IO_L44N_2	P7		
2	IO_L44P_2	P8		
2	IO_L45N_2	L1		
2	IO_L45P_2	L2		
2	IO_L46N_2/VREF_2	M5		
2	IO_L46P_2	M6		
2	IO_L47N_2	R10		
2	IO_L47P_2	R11		
2	IO_L48N_2	M3		
2	IO_L48P_2	M4		
2	IO_L49N_2	M1		
2	IO_L49P_2	M2		
2	IO_L50N_2	R7		
2	IO_L50P_2	T8		
2	IO_L51N_2	P4		
2	IO_L51P_2	N4		
2	IO_L52N_2/VREF_2	N2		
2	IO_L52P_2	N3		
2	IO_L53N_2	T10		
2	IO_L53P_2	T11		
2	IO_L54N_2	P5		
2	IO_L54P_2	P6		
2	IO_L55N_2	R3		
2	IO_L55P_2	P3		
2	IO_L56N_2	T6		
2	IO_L56P_2	T7		
2	IO_L57N_2	P1		
2	IO_L57P_2	P2		
2	IO_L58N_2/VREF_2	R5		
2	IO_L58P_2	R6		
2	IO_L59N_2	U10		

Table 11: **FF1148 — XC2VP40 and XC2VP50**

Bank	Pin Description	Pin Number	No Connects	
			XC2VP40	XC2VP50
2	IO_L59P_2	U11		
2	IO_L60N_2	R1		
2	IO_L60P_2	R2		
2	IO_L85N_2	T3		
2	IO_L85P_2	T4		
2	IO_L86N_2	U8		
2	IO_L86P_2	U9		
2	IO_L87N_2	U2		
2	IO_L87P_2	T2		
2	IO_L88N_2/VREF_2	U4		
2	IO_L88P_2	U5		
2	IO_L89N_2	U6		
2	IO_L89P_2	U7		
2	IO_L90N_2	V3		
2	IO_L90P_2	U3		
3	IO_L90N_3	V6		
3	IO_L90P_3	V7		
3	IO_L89N_3	V10		
3	IO_L89P_3	V11		
3	IO_L88N_3	V4		
3	IO_L88P_3	V5		
3	IO_L87N_3/VREF_3	V2		
3	IO_L87P_3	W2		
3	IO_L86N_3	V8		
3	IO_L86P_3	V9		
3	IO_L85N_3	W6		
3	IO_L85P_3	W7		
3	IO_L60N_3	W3		
3	IO_L60P_3	W4		
3	IO_L59N_3	W10		
3	IO_L59P_3	W11		
3	IO_L58N_3	Y5		
3	IO_L58P_3	Y6		
3	IO_L57N_3/VREF_3	Y3		
3	IO_L57P_3	AA3		
3	IO_L56N_3	W8		
3	IO_L56P_3	Y7		

Table 11: **FF1148 — XC2VP40 and XC2VP50**

Bank	Pin Description	Pin Number	No Connects	
			XC2VP40	XC2VP50
3	IO_L55N_3	Y1		
3	IO_L55P_3	Y2		
3	IO_L54N_3	AA5		
3	IO_L54P_3	AA6		
3	IO_L53N_3	Y10		
3	IO_L53P_3	Y11		
3	IO_L52N_3	AA4		
3	IO_L52P_3	AB4		
3	IO_L51N_3/VREF_3	AA1		
3	IO_L51P_3	AA2		
3	IO_L50N_3	Y9		
3	IO_L50P_3	AA9		
3	IO_L49N_3	AB6		
3	IO_L49P_3	AB7		
3	IO_L48N_3	AB2		
3	IO_L48P_3	AB3		
3	IO_L47N_3	AA10		
3	IO_L47P_3	AA11		
3	IO_L46N_3	AC5		
3	IO_L46P_3	AC6		
3	IO_L45N_3/VREF_3	AC3		
3	IO_L45P_3	AC4		
3	IO_L44N_3	AA7		
3	IO_L44P_3	AA8		
3	IO_L43N_3	AC1		
3	IO_L43P_3	AC2		
3	IO_L42N_3	AD5		
3	IO_L42P_3	AD6		
3	IO_L41N_3	AB10		
3	IO_L41P_3	AB11		
3	IO_L40N_3	AD3		
3	IO_L40P_3	AE3		
3	IO_L39N_3/VREF_3	AD1		
3	IO_L39P_3	AD2		
3	IO_L38N_3	AB8		
3	IO_L38P_3	AC7		
3	IO_L37N_3	AE5		
3	IO_L37P_3	AE6		

Table 11: **FF1148 — XC2VP40 and XC2VP50**

Bank	Pin Description	Pin Number	No Connects	
			XC2VP40	XC2VP50
3	IO_L36N_3	AE4		
3	IO_L36P_3	AF4		
3	IO_L35N_3	AC10		
3	IO_L35P_3	AD10		
3	IO_L34N_3	AE1		
3	IO_L34P_3	AE2		
3	IO_L33N_3/VREF_3	AF6		
3	IO_L33P_3	AF7		
3	IO_L32N_3	AC8		
3	IO_L32P_3	AC9		
3	IO_L31N_3	AF2		
3	IO_L31P_3	AF3		
3	IO_L30N_3	AG5		
3	IO_L30P_3	AG6		
3	IO_L29N_3	AD9		
3	IO_L29P_3	AE9		
3	IO_L28N_3	AG4		
3	IO_L28P_3	AH3		
3	IO_L27N_3/VREF_3	AG2		
3	IO_L27P_3	AG3		
3	IO_L26N_3	AD7		
3	IO_L26P_3	AE7		
3	IO_L25N_3	AH6		
3	IO_L25P_3	AH7		
3	IO_L24N_3	AH5		
3	IO_L24P_3	AJ5		
3	IO_L23N_3	AE8		
3	IO_L23P_3	AF8		
3	IO_L22N_3	AH1		
3	IO_L22P_3	AH2		
3	IO_L21N_3/VREF_3	AJ6		
3	IO_L21P_3	AK6		
3	IO_L20N_3	AG7		
3	IO_L20P_3	AG8		
3	IO_L19N_3	AJ3		
3	IO_L19P_3	AJ4		
3	IO_L18N_3	AJ1		
3	IO_L18P_3	AJ2		

Table 11: **FF1148 — XC2VP40 and XC2VP50**

Bank	Pin Description	Pin Number	No Connects	
			XC2VP40	XC2VP50
3	IO_L17N_3	AH9		
3	IO_L17P_3	AJ9		
3	IO_L16N_3	AK7		
3	IO_L16P_3	AL7		
3	IO_L15N_3/VREF_3	AK4		
3	IO_L15P_3	AL4		
3	IO_L14N_3	AJ7		
3	IO_L14P_3	AJ8		
3	IO_L13N_3	AK3		
3	IO_L13P_3	AL3		
3	IO_L12N_3	AL5		
3	IO_L12P_3	AL6		
3	IO_L11N_3	AK8		
3	IO_L11P_3	AL8		
3	IO_L10N_3	AL1		
3	IO_L10P_3	AL2		
3	IO_L09N_3/VREF_3	AM6		
3	IO_L09P_3	AM7		
3	IO_L08N_3	AL9		
3	IO_L08P_3	AM9		
3	IO_L07N_3	AM5		
3	IO_L07P_3	AN5		
3	IO_L06N_3	AM1		
3	IO_L06P_3	AM2		
3	IO_L05N_3	AN8		
3	IO_L05P_3	AN9		
3	IO_L04N_3	AN6		
3	IO_L04P_3	AP6		
3	IO_L03N_3/VREF_3	AN4		
3	IO_L03P_3	AP4		
3	IO_L02N_3	AN7		
3	IO_L02P_3	AP7		
3	IO_L01N_3/VRP_3	AN3		
3	IO_L01P_3/VRN_3	AP3		
4	IO_L01N_4/BUSY/DOUT(1)	AK10		
4	IO_L01P_4/INIT_B	AJ10		
4	IO_L02N_4/D0/DIN(1)	AF11		

Table 11: **FF1148 — XC2VP40 and XC2VP50**

Bank	Pin Description	Pin Number	No Connects	
			XC2VP40	XC2VP50
4	IO_L02P_4/D1	AE11		
4	IO_L03N_4/D2	AM10		
4	IO_L03P_4/D3	AL10		
4	IO_L05_4/No_Pair	AH10		
4	IO_L06N_4/VRP_4	AP10		
4	IO_L06P_4/VRN_4	AN10		
4	IO_L07N_4	AH11		
4	IO_L07P_4/VREF_4	AH12		
4	IO_L08N_4	AG12		
4	IO_L08P_4	AG13		
4	IO_L09N_4	AK11		
4	IO_L09P_4/VREF_4	AJ11		
4	IO_L19N_4	AM11		
4	IO_L19P_4	AM12		
4	IO_L20N_4	AF12		
4	IO_L20P_4	AE12		
4	IO_L21N_4	AP11		
4	IO_L21P_4	AN11		
4	IO_L25N_4	AK12		
4	IO_L25P_4	AJ12		
4	IO_L26N_4	AE13		
4	IO_L26P_4	AD13		
4	IO_L27N_4	AL12		
4	IO_L27P_4/VREF_4	AL13		
4	IO_L37N_4	AP12		
4	IO_L37P_4	AN12		
4	IO_L38N_4	AF14		
4	IO_L38P_4	AF15		
4	IO_L39N_4	AJ13		
4	IO_L39P_4	AH13		
4	IO_L43N_4	AN13		
4	IO_L43P_4	AM13		
4	IO_L44N_4	AE14		
4	IO_L44P_4	AD14		
4	IO_L45N_4	AH14		
4	IO_L45P_4/VREF_4	AG14		
4	IO_L46N_4	AK14		
4	IO_L46P_4	AJ14		

Table 11: **FF1148 — XC2VP40 and XC2VP50**

Bank	Pin Description	Pin Number	No Connects	
			XC2VP40	XC2VP50
4	IO_L47N_4	AE15		
4	IO_L47P_4	AD15		
4	IO_L48N_4	AM14		
4	IO_L48P_4	AL14		
4	IO_L49N_4	AP14		
4	IO_L49P_4	AN14		
4	IO_L50_4/No_Pair	AH15		
4	IO_L53_4/No_Pair	AG16		
4	IO_L54N_4	AK15		
4	IO_L54P_4	AJ15		
4	IO_L55N_4	AM15		
4	IO_L55P_4	AL16		
4	IO_L56N_4	AE16		
4	IO_L56P_4	AD16		
4	IO_L57N_4	AP15		
4	IO_L57P_4/VREF_4	AN15		
4	IO_L66N_4	AJ16	NC	
4	IO_L66P_4/VREF_4	AH16	NC	
4	IO_L67N_4	AN16		
4	IO_L67P_4	AM16		
4	IO_L68N_4	AG17		
4	IO_L68P_4	AF17		
4	IO_L69N_4	AJ17		
4	IO_L69P_4/VREF_4	AH17		
4	IO_L73N_4	AL17		
4	IO_L73P_4	AK17		
4	IO_L74N_4/GCLK3S	AE17		
4	IO_L74P_4/GCLK2P	AD17		
4	IO_L75N_4/GCLK1S	AN17		
4	IO_L75P_4/GCLK0P	AM17		
5	IO_L75N_5/GCLK7S	AM18		
5	IO_L75P_5/GCLK6P	AN18		
5	IO_L74N_5/GCLK5S	AD18		
5	IO_L74P_5/GCLK4P	AE18		
5	IO_L73N_5	AK18		
5	IO_L73P_5	AL18		
5	IO_L69N_5/VREF_5	AH18		

Table 11: **FF1148 — XC2VP40 and XC2VP50**

Bank	Pin Description	Pin Number	No Connects	
			XC2VP40	XC2VP50
5	IO_L69P_5	AJ18		
5	IO_L68N_5	AF18		
5	IO_L68P_5	AG18		
5	IO_L67N_5	AM19		
5	IO_L67P_5	AN19		
5	IO_L66N_5/VREF_5	AH19	NC	
5	IO_L66P_5	AJ19	NC	
5	IO_L57N_5/VREF_5	AN20		
5	IO_L57P_5	AP20		
5	IO_L56N_5	AD19		
5	IO_L56P_5	AE19		
5	IO_L55N_5	AL19		
5	IO_L55P_5	AM20		
5	IO_L54N_5	AJ20		
5	IO_L54P_5	AK20		
5	IO_L53_5/No_Pair	AG19		
5	IO_L50_5/No_Pair	AH20		
5	IO_L49N_5	AN21		
5	IO_L49P_5	AP21		
5	IO_L48N_5	AL21		
5	IO_L48P_5	AM21		
5	IO_L47N_5	AD20		
5	IO_L47P_5	AE20		
5	IO_L46N_5	AJ21		
5	IO_L46P_5	AK21		
5	IO_L45N_5/VREF_5	AG21		
5	IO_L45P_5	AH21		
5	IO_L44N_5	AD21		
5	IO_L44P_5	AE21		
5	IO_L43N_5	AM22		
5	IO_L43P_5	AN22		
5	IO_L39N_5	AH22		
5	IO_L39P_5	AJ22		
5	IO_L38N_5	AF20		
5	IO_L38P_5	AF21		
5	IO_L37N_5	AN23		
5	IO_L37P_5	AP23		
5	IO_L27N_5/VREF_5	AL22		

Table 11: **FF1148 — XC2VP40 and XC2VP50**

Bank	Pin Description	Pin Number	No Connects	
			XC2VP40	XC2VP50
5	IO_L27P_5	AL23		
5	IO_L26N_5	AD22		
5	IO_L26P_5	AE22		
5	IO_L25N_5	AJ23		
5	IO_L25P_5	AK23		
5	IO_L21N_5	AN24		
5	IO_L21P_5	AP24		
5	IO_L20N_5	AE23		
5	IO_L20P_5	AF23		
5	IO_L19N_5	AM23		
5	IO_L19P_5	AM24		
5	IO_L09N_5/VREF_5	AJ24		
5	IO_L09P_5	AK24		
5	IO_L08N_5	AG22		
5	IO_L08P_5	AG23		
5	IO_L07N_5/VREF_5	AH23		
5	IO_L07P_5	AH24		
5	IO_L06N_5/VRP_5	AN25		
5	IO_L06P_5/VRN_5	AP25		
5	IO_L05_5/No_Pair	AH25		
5	IO_L03N_5/D4	AL25		
5	IO_L03P_5/D5	AM25		
5	IO_L02N_5/D6	AE24		
5	IO_L02P_5/D7	AF24		
5	IO_L01N_5/RDWR_B	AJ25		
5	IO_L01P_5/CS_B	AK25		
6	IO_L01P_6/VRN_6	AP32		
6	IO_L01N_6/VRP_6	AN32		
6	IO_L02P_6	AP28		
6	IO_L02N_6	AN28		
6	IO_L03P_6	AP31		
6	IO_L03N_6/VREF_6	AN31		
6	IO_L04P_6	AP29		
6	IO_L04N_6	AN29		
6	IO_L05P_6	AN26		
6	IO_L05N_6	AN27		
6	IO_L06P_6	AM33		

Table 11: **FF1148 — XC2VP40 and XC2VP50**

Bank	Pin Description	Pin Number	No Connects	
			XC2VP40	XC2VP50
6	IO_L06N_6	AM34		
6	IO_L07P_6	AN30		
6	IO_L07N_6	AM30		
6	IO_L08P_6	AM26		
6	IO_L08N_6	AL26		
6	IO_L09P_6	AM28		
6	IO_L09N_6/VREF_6	AM29		
6	IO_L10P_6	AL33		
6	IO_L10N_6	AL34		
6	IO_L11P_6	AL27		
6	IO_L11N_6	AK27		
6	IO_L12P_6	AL29		
6	IO_L12N_6	AL30		
6	IO_L13P_6	AL32		
6	IO_L13N_6	AK32		
6	IO_L14P_6	AJ27		
6	IO_L14N_6	AJ28		
6	IO_L15P_6	AL31		
6	IO_L15N_6/VREF_6	AK31		
6	IO_L16P_6	AL28		
6	IO_L16N_6	AK28		
6	IO_L17P_6	AJ26		
6	IO_L17N_6	AH26		
6	IO_L18P_6	AJ33		
6	IO_L18N_6	AJ34		
6	IO_L19P_6	AJ31		
6	IO_L19N_6	AJ32		
6	IO_L20P_6	AG27		
6	IO_L20N_6	AG28		
6	IO_L21P_6	AK29		
6	IO_L21N_6/VREF_6	AJ29		
6	IO_L22P_6	AH33		
6	IO_L22N_6	AH34		
6	IO_L23P_6	AF27		
6	IO_L23N_6	AE27		
6	IO_L24P_6	AJ30		
6	IO_L24N_6	AH30		
6	IO_L25P_6	AH28		

Table 11: **FF1148 — XC2VP40 and XC2VP50**

Bank	Pin Description	Pin Number	No Connects	
			XC2VP40	XC2VP50
6	IO_L25N_6	AH29		
6	IO_L26P_6	AE28		
6	IO_L26N_6	AD28		
6	IO_L27P_6	AG32		
6	IO_L27N_6/VREF_6	AG33		
6	IO_L28P_6	AH32		
6	IO_L28N_6	AG31		
6	IO_L29P_6	AE26		
6	IO_L29N_6	AD26		
6	IO_L30P_6	AG29		
6	IO_L30N_6	AG30		
6	IO_L31P_6	AF32		
6	IO_L31N_6	AF33		
6	IO_L32P_6	AC26		
6	IO_L32N_6	AC27		
6	IO_L33P_6	AF28		
6	IO_L33N_6/VREF_6	AF29		
6	IO_L34P_6	AE33		
6	IO_L34N_6	AE34		
6	IO_L35P_6	AD25		
6	IO_L35N_6	AC25		
6	IO_L36P_6	AF31		
6	IO_L36N_6	AE31		
6	IO_L37P_6	AE29		
6	IO_L37N_6	AE30		
6	IO_L38P_6	AC28		
6	IO_L38N_6	AB27		
6	IO_L39P_6	AD33		
6	IO_L39N_6/VREF_6	AD34		
6	IO_L40P_6	AE32		
6	IO_L40N_6	AD32		
6	IO_L41P_6	AB24		
6	IO_L41N_6	AB25		
6	IO_L42P_6	AD29		
6	IO_L42N_6	AD30		
6	IO_L43P_6	AC33		
6	IO_L43N_6	AC34		
6	IO_L44P_6	AA27		

Table 11: **FF1148 — XC2VP40 and XC2VP50**

Bank	Pin Description	Pin Number	No Connects	
			XC2VP40	XC2VP50
6	IO_L44N_6	AA28		
6	IO_L45P_6	AC31		
6	IO_L45N_6/VREF_6	AC32		
6	IO_L46P_6	AC29		
6	IO_L46N_6	AC30		
6	IO_L47P_6	AA24		
6	IO_L47N_6	AA25		
6	IO_L48P_6	AB32		
6	IO_L48N_6	AB33		
6	IO_L49P_6	AB28		
6	IO_L49N_6	AB29		
6	IO_L50P_6	AA26		
6	IO_L50N_6	Y26		
6	IO_L51P_6	AA33		
6	IO_L51N_6/VREF_6	AA34		
6	IO_L52P_6	AB31		
6	IO_L52N_6	AA31		
6	IO_L53P_6	Y24		
6	IO_L53N_6	Y25		
6	IO_L54P_6	AA29		
6	IO_L54N_6	AA30		
6	IO_L55P_6	Y33		
6	IO_L55N_6	Y34		
6	IO_L56P_6	Y28		
6	IO_L56N_6	W27		
6	IO_L57P_6	AA32		
6	IO_L57N_6/VREF_6	Y32		
6	IO_L58P_6	Y29		
6	IO_L58N_6	Y30		
6	IO_L59P_6	W24		
6	IO_L59N_6	W25		
6	IO_L60P_6	W31		
6	IO_L60N_6	W32		
6	IO_L85P_6	W28		
6	IO_L85N_6	W29		
6	IO_L86P_6	V26		
6	IO_L86N_6	V27		
6	IO_L87P_6	W33		

Table 11: **FF1148 — XC2VP40 and XC2VP50**

Bank	Pin Description	Pin Number	No Connects	
			XC2VP40	XC2VP50
6	IO_L87N_6/VREF_6	V33		
6	IO_L88P_6	V30		
6	IO_L88N_6	V31		
6	IO_L89P_6	V24		
6	IO_L89N_6	V25		
6	IO_L90P_6	V28		
6	IO_L90N_6	V29		
7	IO_L90P_7	U32		
7	IO_L90N_7	V32		
7	IO_L89P_7	U28		
7	IO_L89N_7	U29		
7	IO_L88P_7	U30		
7	IO_L88N_7/VREF_7	U31		
7	IO_L87P_7	T33		
7	IO_L87N_7	U33		
7	IO_L86P_7	U26		
7	IO_L86N_7	U27		
7	IO_L85P_7	T31		
7	IO_L85N_7	T32		
7	IO_L60P_7	R33		
7	IO_L60N_7	R34		
7	IO_L59P_7	U24		
7	IO_L59N_7	U25		
7	IO_L58P_7	R29		
7	IO_L58N_7/VREF_7	R30		
7	IO_L57P_7	P33		
7	IO_L57N_7	P34		
7	IO_L56P_7	T28		
7	IO_L56N_7	T29		
7	IO_L55P_7	P32		
7	IO_L55N_7	R32		
7	IO_L54P_7	P29		
7	IO_L54N_7	P30		
7	IO_L53P_7	T24		
7	IO_L53N_7	T25		
7	IO_L52P_7	N32		
7	IO_L52N_7/VREF_7	N33		

Table 11: **FF1148 — XC2VP40 and XC2VP50**

Bank	Pin Description	Pin Number	No Connects	
			XC2VP40	XC2VP50
7	IO_L51P_7	N31		
7	IO_L51N_7	P31		
7	IO_L50P_7	T27		
7	IO_L50N_7	R28		
7	IO_L49P_7	M33		
7	IO_L49N_7	M34		
7	IO_L48P_7	M31		
7	IO_L48N_7	M32		
7	IO_L47P_7	R24		
7	IO_L47N_7	R25		
7	IO_L46P_7	M29		
7	IO_L46N_7/VREF_7	M30		
7	IO_L45P_7	L33		
7	IO_L45N_7	L34		
7	IO_L44P_7	P27		
7	IO_L44N_7	P28		
7	IO_L43P_7	L29		
7	IO_L43N_7	L30		
7	IO_L42P_7	K33		
7	IO_L42N_7	K34		
7	IO_L41P_7	P26		
7	IO_L41N_7	R26		
7	IO_L40P_7	K32		
7	IO_L40N_7/VREF_7	L32		
7	IO_L39P_7	K29		
7	IO_L39N_7	K30		
7	IO_L38P_7	P24		
7	IO_L38N_7	P25		
7	IO_L37P_7	J32		
7	IO_L37N_7	J33		
7	IO_L36P_7	J31		
7	IO_L36N_7	K31		
7	IO_L35P_7	N28		
7	IO_L35N_7	N29		
7	IO_L34P_7	H32		
7	IO_L34N_7/VREF_7	H33		
7	IO_L33P_7	H29		
7	IO_L33N_7	H30		

Table 11: **FF1148 — XC2VP40 and XC2VP50**

Bank	Pin Description	Pin Number	No Connects	
			XC2VP40	XC2VP50
7	IO_L32P_7	N24		
7	IO_L32N_7	N25		
7	IO_L31P_7	G33		
7	IO_L31N_7	G34		
7	IO_L30P_7	H31		
7	IO_L30N_7	G32		
7	IO_L29P_7	N27		
7	IO_L29N_7	M28		
7	IO_L28P_7	G28		
7	IO_L28N_7/VREF_7	G29		
7	IO_L27P_7	F33		
7	IO_L27N_7	F34		
7	IO_L26P_7	M26		
7	IO_L26N_7	M27		
7	IO_L25P_7	F31		
7	IO_L25N_7	F32		
7	IO_L24P_7	F30		
7	IO_L24N_7	G30		
7	IO_L23P_7	L25		
7	IO_L23N_7	M25		
7	IO_L22P_7	F27		
7	IO_L22N_7/VREF_7	F28		
7	IO_L21P_7	E29		
7	IO_L21N_7	F29		
7	IO_L20P_7	L28		
7	IO_L20N_7	K28		
7	IO_L19P_7	D33		
7	IO_L19N_7	D34		
7	IO_L18P_7	D32		
7	IO_L18N_7	E32		
7	IO_L17P_7	K26		
7	IO_L17N_7	L26		
7	IO_L16P_7	D31		
7	IO_L16N_7/VREF_7	E31		
7	IO_L15P_7	D29		
7	IO_L15N_7	D30		
7	IO_L14P_7	J28		
7	IO_L14N_7	J29		

Table 11: **FF1148 — XC2VP40 and XC2VP50**

Bank	Pin Description	Pin Number	No Connects	
			XC2VP40	XC2VP50
7	IO_L13P_7	D28		
7	IO_L13N_7	E28		
7	IO_L12P_7	C33		
7	IO_L12N_7	C34		
7	IO_L11P_7	J27		
7	IO_L11N_7	K27		
7	IO_L10P_7	B30		
7	IO_L10N_7/VREF_7	C30		
7	IO_L09P_7	C28		
7	IO_L09N_7	C29		
7	IO_L08P_7	H27		
7	IO_L08N_7	H28		
7	IO_L07P_7	A32		
7	IO_L07N_7	B32		
7	IO_L06P_7	A31		
7	IO_L06N_7	B31		
7	IO_L05P_7	D27		
7	IO_L05N_7	E27		
7	IO_L04P_7	A29		
7	IO_L04N_7/VREF_7	B29		
7	IO_L03P_7	A28		
7	IO_L03N_7	B28		
7	IO_L02P_7	D26		
7	IO_L02N_7	C26		
7	IO_L01P_7/VRN_7	B26		
7	IO_L01N_7/VRP_7	B27		
7	VCCO_7	E33		
7	VCCO_7	R31		
7	VCCO_7	L31		
7	VCCO_7	G31		
7	VCCO_7	C31		
7	VCCO_7	R27		
7	VCCO_7	L27		
7	VCCO_7	G27		
7	VCCO_7	C27		
7	VCCO_7	J26		
7	VCCO_7	M24		

Table 11: **FF1148 — XC2VP40 and XC2VP50**

Bank	Pin Description	Pin Number	No Connects	
			XC2VP40	XC2VP50
7	VCCO_7	U23		
7	VCCO_7	T23		
7	VCCO_7	R23		
7	VCCO_7	P23		
7	VCCO_7	N23		
6	VCCO_6	AK33		
6	VCCO_6	AM31		
6	VCCO_6	AH31		
6	VCCO_6	AD31		
6	VCCO_6	Y31		
6	VCCO_6	AM27		
6	VCCO_6	AH27		
6	VCCO_6	AD27		
6	VCCO_6	Y27		
6	VCCO_6	AF26		
6	VCCO_6	AC24		
6	VCCO_6	AB23		
6	VCCO_6	AA23		
6	VCCO_6	Y23		
6	VCCO_6	W23		
6	VCCO_6	V23		
5	VCCO_5	AL24		
5	VCCO_5	AG24		
5	VCCO_5	AD23		
5	VCCO_5	AC22		
5	VCCO_5	AC21		
5	VCCO_5	AL20		
5	VCCO_5	AG20		
5	VCCO_5	AC20		
5	VCCO_5	AC19		
5	VCCO_5	AC18		
4	VCCO_4	AC17		
4	VCCO_4	AC16		
4	VCCO_4	AL15		
4	VCCO_4	AG15		
4	VCCO_4	AC15		
4	VCCO_4	AC14		
4	VCCO_4	AC13		

Table 11: **FF1148 — XC2VP40 and XC2VP50**

Bank	Pin Description	Pin Number	No Connects	
			XC2VP40	XC2VP50
4	VCCO_4	AD12		
4	VCCO_4	AL11		
4	VCCO_4	AG11		
3	VCCO_3	AB12		
3	VCCO_3	AA12		
3	VCCO_3	Y12		
3	VCCO_3	W12		
3	VCCO_3	V12		
3	VCCO_3	AC11		
3	VCCO_3	AF9		
3	VCCO_3	AM8		
3	VCCO_3	AH8		
3	VCCO_3	AD8		
3	VCCO_3	Y8		
3	VCCO_3	AM4		
3	VCCO_3	AH4		
3	VCCO_3	AD4		
3	VCCO_3	Y4		
3	VCCO_3	AK2		
2	VCCO_2	U12		
2	VCCO_2	T12		
2	VCCO_2	R12		
2	VCCO_2	P12		
2	VCCO_2	N12		
2	VCCO_2	M11		
2	VCCO_2	J9		
2	VCCO_2	R8		
2	VCCO_2	L8		
2	VCCO_2	G8		
2	VCCO_2	C8		
2	VCCO_2	R4		
2	VCCO_2	L4		
2	VCCO_2	G4		
2	VCCO_2	C4		
2	VCCO_2	E2		
1	VCCO_1	M17		
1	VCCO_1	M16		
1	VCCO_1	M15		

Table 11: **FF1148 — XC2VP40 and XC2VP50**

Bank	Pin Description	Pin Number	No Connects	
			XC2VP40	XC2VP50
1	VCCO_1	H15		
1	VCCO_1	D15		
1	VCCO_1	M14		
1	VCCO_1	M13		
1	VCCO_1	L12		
1	VCCO_1	H11		
1	VCCO_1	D11		
0	VCCO_0	H24		
0	VCCO_0	D24		
0	VCCO_0	L23		
0	VCCO_0	M22		
0	VCCO_0	M21		
0	VCCO_0	M20		
0	VCCO_0	H20		
0	VCCO_0	D20		
0	VCCO_0	M19		
0	VCCO_0	M18		
N/A	CCLK	AG9		
N/A	PROG_B	G26		
N/A	DONE	AF10		
N/A	M0	AG25		
N/A	M1	AG26		
N/A	M2	AF25		
N/A	TCK	G9		
N/A	TDI	F26		
N/A	TDO	F9		
N/A	TMS	H10		
N/A	PWRDWN_B	AG10		
N/A	HSWAP_EN	H25		
N/A	RSVD	H9		
N/A	VBATT	J10		
N/A	DXP	J25		
N/A	DXN	H26		
N/A	VCCINT	AD24		
N/A	VCCINT	L24		
N/A	VCCINT	AC23		

Table 11: **FF1148 — XC2VP40 and XC2VP50**

Bank	Pin Description	Pin Number	No Connects	
			XC2VP40	XC2VP50
N/A	VCCINT	M23		
N/A	VCCINT	AB22		
N/A	VCCINT	AA22		
N/A	VCCINT	Y22		
N/A	VCCINT	W22		
N/A	VCCINT	V22		
N/A	VCCINT	U22		
N/A	VCCINT	T22		
N/A	VCCINT	R22		
N/A	VCCINT	P22		
N/A	VCCINT	N22		
N/A	VCCINT	AB21		
N/A	VCCINT	N21		
N/A	VCCINT	AB20		
N/A	VCCINT	N20		
N/A	VCCINT	AB19		
N/A	VCCINT	N19		
N/A	VCCINT	AB18		
N/A	VCCINT	N18		
N/A	VCCINT	AB17		
N/A	VCCINT	N17		
N/A	VCCINT	AB16		
N/A	VCCINT	N16		
N/A	VCCINT	AB15		
N/A	VCCINT	N15		
N/A	VCCINT	AB14		
N/A	VCCINT	N14		
N/A	VCCINT	AB13		
N/A	VCCINT	AA13		
N/A	VCCINT	Y13		
N/A	VCCINT	W13		
N/A	VCCINT	V13		
N/A	VCCINT	U13		
N/A	VCCINT	T13		
N/A	VCCINT	R13		
N/A	VCCINT	P13		
N/A	VCCINT	N13		
N/A	VCCINT	AC12		

Table 11: **FF1148 — XC2VP40 and XC2VP50**

Bank	Pin Description	Pin Number	No Connects	
			XC2VP40	XC2VP50
N/A	VCCINT	M12		
N/A	VCCINT	AD11		
N/A	VCCINT	L11		
N/A	VCCAUX	AN34		
N/A	VCCAUX	AG34		
N/A	VCCAUX	U34		
N/A	VCCAUX	H34		
N/A	VCCAUX	B34		
N/A	VCCAUX	AP33		
N/A	VCCAUX	A33		
N/A	VCCAUX	AP27		
N/A	VCCAUX	A27		
N/A	VCCAUX	AP17		
N/A	VCCAUX	A17		
N/A	VCCAUX	AP8		
N/A	VCCAUX	A8		
N/A	VCCAUX	AP2		
N/A	VCCAUX	A2		
N/A	VCCAUX	AN1		
N/A	VCCAUX	AG1		
N/A	VCCAUX	U1		
N/A	VCCAUX	H1		
N/A	VCCAUX	B1		
N/A	GND	AK34		
N/A	GND	AF34		
N/A	GND	AB34		
N/A	GND	W34		
N/A	GND	V34		
N/A	GND	T34		
N/A	GND	N34		
N/A	GND	J34		
N/A	GND	E34		
N/A	GND	AN33		
N/A	GND	B33		
N/A	GND	AM32		
N/A	GND	C32		
N/A	GND	AP30		
N/A	GND	AK30		

Table 11: **FF1148 — XC2VP40 and XC2VP50**

Bank	Pin Description	Pin Number	No Connects	
			XC2VP40	XC2VP50
N/A	GND	AF30		
N/A	GND	AB30		
N/A	GND	W30		
N/A	GND	T30		
N/A	GND	N30		
N/A	GND	J30		
N/A	GND	E30		
N/A	GND	A30		
N/A	GND	AP26		
N/A	GND	AK26		
N/A	GND	AB26		
N/A	GND	W26		
N/A	GND	T26		
N/A	GND	N26		
N/A	GND	E26		
N/A	GND	A26		
N/A	GND	AE25		
N/A	GND	K25		
N/A	GND	AP22		
N/A	GND	AK22		
N/A	GND	AF22		
N/A	GND	J22		
N/A	GND	E22		
N/A	GND	A22		
N/A	GND	Y21		
N/A	GND	W21		
N/A	GND	V21		
N/A	GND	U21		
N/A	GND	T21		
N/A	GND	R21		
N/A	GND	AA20		
N/A	GND	Y20		
N/A	GND	W20		
N/A	GND	V20		
N/A	GND	U20		
N/A	GND	T20		
N/A	GND	R20		
N/A	GND	P20		

Table 11: **FF1148 — XC2VP40 and XC2VP50**

Bank	Pin Description	Pin Number	No Connects	
			XC2VP40	XC2VP50
N/A	GND	AP19		
N/A	GND	AK19		
N/A	GND	AF19		
N/A	GND	AA19		
N/A	GND	Y19		
N/A	GND	W19		
N/A	GND	V19		
N/A	GND	U19		
N/A	GND	T19		
N/A	GND	R19		
N/A	GND	P19		
N/A	GND	J19		
N/A	GND	E19		
N/A	GND	A19		
N/A	GND	AP18		
N/A	GND	AA18		
N/A	GND	Y18		
N/A	GND	W18		
N/A	GND	V18		
N/A	GND	U18		
N/A	GND	T18		
N/A	GND	R18		
N/A	GND	P18		
N/A	GND	A18		
N/A	GND	AA17		
N/A	GND	Y17		
N/A	GND	W17		
N/A	GND	V17		
N/A	GND	U17		
N/A	GND	T17		
N/A	GND	R17		
N/A	GND	P17		
N/A	GND	AP16		
N/A	GND	AK16		
N/A	GND	AF16		
N/A	GND	AA16		
N/A	GND	Y16		
N/A	GND	W16		

Table 11: **FF1148 — XC2VP40 and XC2VP50**

Bank	Pin Description	Pin Number	No Connects	
			XC2VP40	XC2VP50
N/A	GND	V16		
N/A	GND	U16		
N/A	GND	T16		
N/A	GND	R16		
N/A	GND	P16		
N/A	GND	J16		
N/A	GND	E16		
N/A	GND	A16		
N/A	GND	AA15		
N/A	GND	Y15		
N/A	GND	W15		
N/A	GND	V15		
N/A	GND	U15		
N/A	GND	T15		
N/A	GND	R15		
N/A	GND	P15		
N/A	GND	Y14		
N/A	GND	W14		
N/A	GND	V14		
N/A	GND	U14		
N/A	GND	T14		
N/A	GND	R14		
N/A	GND	AP13		
N/A	GND	AK13		
N/A	GND	AF13		
N/A	GND	J13		
N/A	GND	E13		
N/A	GND	A13		
N/A	GND	AE10		
N/A	GND	K10		
N/A	GND	AP9		
N/A	GND	AK9		
N/A	GND	AB9		
N/A	GND	W9		
N/A	GND	T9		
N/A	GND	N9		
N/A	GND	E9		
N/A	GND	A9		

Table 11: **FF1148 — XC2VP40 and XC2VP50**

Bank	Pin Description	Pin Number	No Connects	
			XC2VP40	XC2VP50
N/A	GND	AP5		
N/A	GND	AK5		
N/A	GND	AF5		
N/A	GND	AB5		
N/A	GND	W5		
N/A	GND	T5		
N/A	GND	N5		
N/A	GND	J5		
N/A	GND	E5		
N/A	GND	A5		
N/A	GND	AM3		
N/A	GND	C3		
N/A	GND	AN2		
N/A	GND	B2		
N/A	GND	AK1		
N/A	GND	AF1		
N/A	GND	AB1		
N/A	GND	W1		
N/A	GND	V1		
N/A	GND	T1		
N/A	GND	N1		
N/A	GND	J1		
N/A	GND	E1		

Notes:
1. See Table 4 for an explanation of the signals available on this pin.

FF1148 Flip-Chip Fine-Pitch BGA Package Specifications (1.00mm pitch)

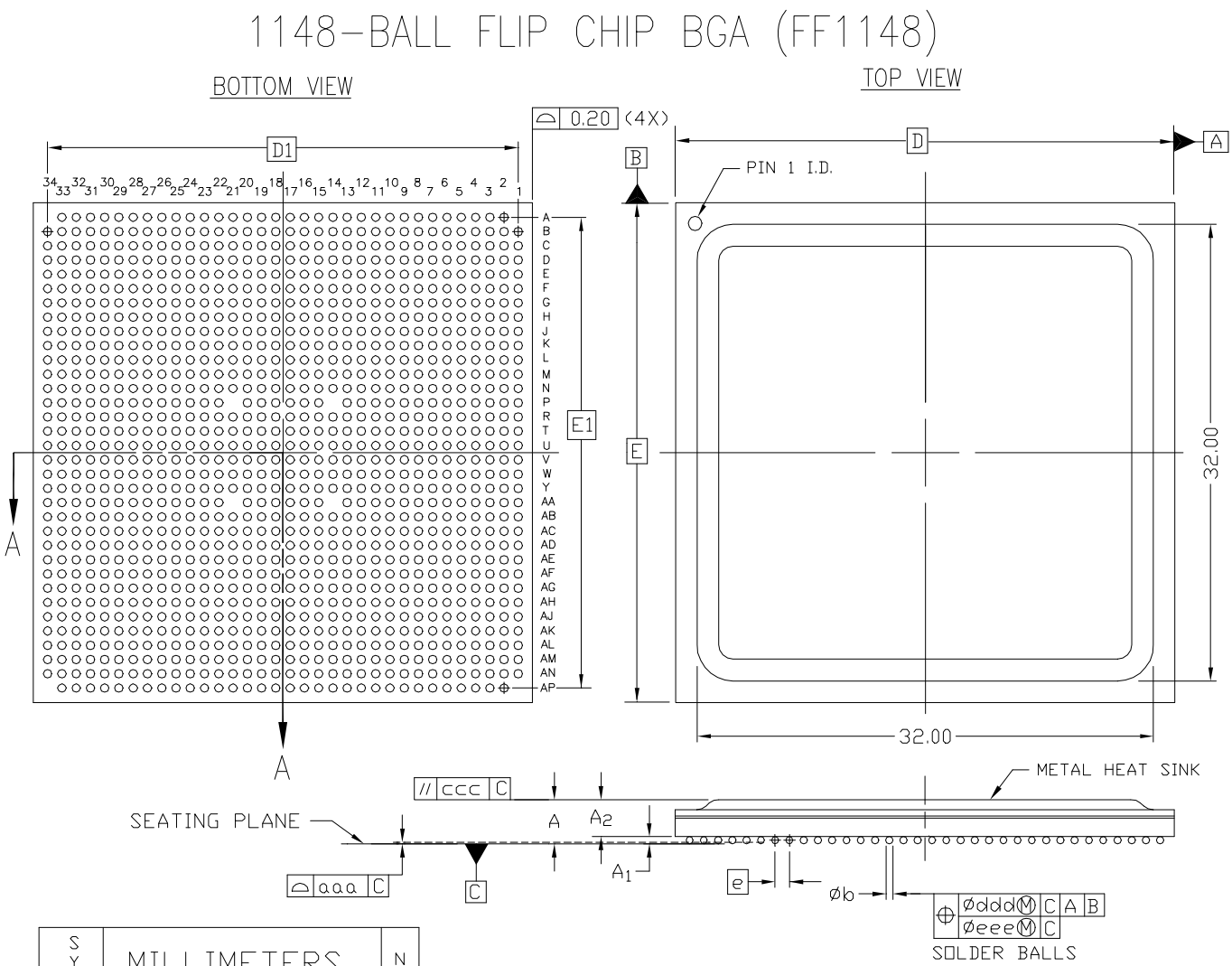

SYMBOL	MILLIMETERS			NOTE
	MIN.	NOM.	MAX.	
A		3.20	3.40	
A_1	0.40	0.50	0.60	
A_2			2.80	
D/E	35.00 BASIC			
D_1/E_1	33.00 REF			
e	1.00 BASIC			
øb	0.50	0.60	0.70	
aaa			0.20	
ccc			0.35	
ddd			0.30	
eee			0.10	
M	34			2

NOTES:

1. ALL DIMENSIONS AND TOLERANCES CONFORM TO ANSI Y14.5M-1994
2. SYMBOL 'M' IS THE BALL MATRIX SIZE.
3. CONFORMS TO JEDEC MS-034-AAR-1 (DEPOPULATED)

Figure 7: **FF1148 Flip-Chip Fine-Pitch BGA Package Specifications**

FF1517 Flip-Chip Fine-Pitch BGA Package

As shown in Table 12, XC2VP50 and XC2VP70 Virtex-II Pro devices are available in the FF1517 flip-chip fine-pitch BGA package. Following this table are the FF1517 Flip-Chip Fine-Pitch BGA Package Specifications (1.00mm pitch).

Table 12: **FF1517 — XC2VP50 and XC2VP70**

Bank	Pin Description	Pin Number	No Connects	
			XC2VP50	XC2VP70
0	IO_L01N_0/VRP_0	D31		
0	IO_L01P_0/VRN_0	E31		
0	IO_L02N_0	K30		
0	IO_L02P_0	J30		
0	IO_L03N_0	G30		
0	IO_L03P_0/VREF_0	H30		
0	IO_L05_0/No_Pair	K28		
0	IO_L06N_0	E30		
0	IO_L06P_0	F30		
0	IO_L07N_0	C30		
0	IO_L07P_0	D30		
0	IO_L08N_0	J29		
0	IO_L08P_0	K29		
0	IO_L09N_0	G29		
0	IO_L09P_0/VREF_0	H29		
0	IO_L19N_0	E29		
0	IO_L19P_0	F29		
0	IO_L20N_0	L28		
0	IO_L20P_0	L27		
0	IO_L21N_0	C29		
0	IO_L21P_0	D29		
0	IO_L25N_0	H28		
0	IO_L25P_0	J28		
0	IO_L26N_0	M27		
0	IO_L26P_0	M26		
0	IO_L27N_0	D28		
0	IO_L27P_0/VREF_0	E28		
0	IO_L28N_0	H27	NC	
0	IO_L28P_0	J27	NC	
0	IO_L29N_0	J26	NC	
0	IO_L29P_0	K26	NC	
0	IO_L30N_0	F28	NC	
0	IO_L30P_0	G27	NC	
0	IO_L34N_0	D27	NC	

Table 12: **FF1517 — XC2VP50 and XC2VP70**

Bank	Pin Description	Pin Number	No Connects	
			XC2VP50	XC2VP70
0	IO_L34P_0	E27	NC	
0	IO_L35N_0	L26	NC	
0	IO_L35P_0	L25	NC	
0	IO_L36N_0	G26	NC	
0	IO_L36P_0/VREF_0	H26	NC	
0	IO_L37N_0	E26		
0	IO_L37P_0	F26		
0	IO_L38N_0	K25		
0	IO_L38P_0	K24		
0	IO_L39N_0	C26		
0	IO_L39P_0	D26		
0	IO_L43N_0	H25		
0	IO_L43P_0	J25		
0	IO_L44N_0	M25		
0	IO_L44P_0	M24		
0	IO_L45N_0	F25		
0	IO_L45P_0/VREF_0	G25		
0	IO_L46N_0	C25		
0	IO_L46P_0	D25		
0	IO_L47N_0	L23		
0	IO_L47P_0	M22		
0	IO_L48N_0	H24		
0	IO_L48P_0	J24		
0	IO_L49N_0	E25		
0	IO_L49P_0	E24		
0	IO_L50_0/No_Pair	N23		
0	IO_L53_0/No_Pair	M23		
0	IO_L54N_0	H23		
0	IO_L54P_0	J23		
0	IO_L55N_0	F24		
0	IO_L55P_0	G23		
0	IO_L56N_0	K22		
0	IO_L56P_0	L22		
0	IO_L57N_0	C23		
0	IO_L57P_0/VREF_0	D23		
0	IO_L58N_0	H22		
0	IO_L58P_0	J22		
0	IO_L59N_0	N22		

Table 12: **FF1517 — XC2VP50 and XC2VP70**

Bank	Pin Description	Pin Number	No Connects	
			XC2VP50	XC2VP70
0	IO_L59P_0	N21		
0	IO_L60N_0	E23		
0	IO_L60P_0	F22		
0	IO_L64N_0	D22		
0	IO_L64P_0	E22		
0	IO_L65N_0	H21		
0	IO_L65P_0	H20		
0	IO_L66N_0	G22		
0	IO_L66P_0/VREF_0	G21		
0	IO_L67N_0	D21		
0	IO_L67P_0	E21		
0	IO_L68N_0	J21		
0	IO_L68P_0	K21		
0	IO_L69N_0	C22		
0	IO_L69P_0/VREF_0	C21		
0	IO_L73N_0	F21		
0	IO_L73P_0	F20		
0	IO_L74N_0/GCLK7P	L21		
0	IO_L74P_0/GCLK6S	M21		
0	IO_L75N_0/GCLK5P	D20		
0	IO_L75P_0/GCLK4S	E20		
1	IO_L75N_1/GCLK3P	K20		
1	IO_L75P_1/GCLK2S	J20		
1	IO_L74N_1/GCLK1P	N20		
1	IO_L74P_1/GCLK0S	M20		
1	IO_L73N_1	E19		
1	IO_L73P_1	D19		
1	IO_L69N_1/VREF_1	G19		
1	IO_L69P_1	F19		
1	IO_L68N_1	L19		
1	IO_L68P_1	K19		
1	IO_L67N_1	J19		
1	IO_L67P_1	H19		
1	IO_L66N_1/VREF_1	C19		
1	IO_L66P_1	C18		
1	IO_L65N_1	N19		
1	IO_L65P_1	M19		

Table 12: **FF1517 — XC2VP50 and XC2VP70**

Bank	Pin Description	Pin Number	No Connects	
			XC2VP50	XC2VP70
1	IO_L64N_1	E18		
1	IO_L64P_1	D18		
1	IO_L60N_1	G18		
1	IO_L60P_1	F18		
1	IO_L59N_1	L18		
1	IO_L59P_1	K18		
1	IO_L58N_1	J18		
1	IO_L58P_1	H18		
1	IO_L57N_1/VREF_1	D17		
1	IO_L57P_1	C17		
1	IO_L56N_1	N18		
1	IO_L56P_1	M18		
1	IO_L55N_1	E17		
1	IO_L55P_1	E16		
1	IO_L54N_1	G17		
1	IO_L54P_1	F16		
1	IO_L53_1/No_Pair	J17		
1	IO_L50_1/No_Pair	H17		
1	IO_L49N_1	J16		
1	IO_L49P_1	H16		
1	IO_L48N_1	D15		
1	IO_L48P_1	C15		
1	IO_L47N_1	L17		
1	IO_L47P_1	K16		
1	IO_L46N_1	F15		
1	IO_L46P_1	E15		
1	IO_L45N_1/VREF_1	H15		
1	IO_L45P_1	G15		
1	IO_L44N_1	N17		
1	IO_L44P_1	M17		
1	IO_L43N_1	D14		
1	IO_L43P_1	C14		
1	IO_L39N_1	F14		
1	IO_L39P_1	E14		
1	IO_L38N_1	M16		
1	IO_L38P_1	M15		
1	IO_L37N_1	H14		
1	IO_L37P_1	G14		

Table 12: **FF1517 — XC2VP50 and XC2VP70**

Bank	Pin Description	Pin Number	No Connects	
			XC2VP50	XC2VP70
1	IO_L36N_1/VREF_1	E13	NC	
1	IO_L36P_1	D13	NC	
1	IO_L35N_1	K15	NC	
1	IO_L35P_1	J15	NC	
1	IO_L34N_1	G13	NC	
1	IO_L34P_1	F12	NC	
1	IO_L30N_1	J13	NC	
1	IO_L30P_1	H13	NC	
1	IO_L29N_1	L15	NC	
1	IO_L29P_1	L14	NC	
1	IO_L28N_1	E12	NC	
1	IO_L28P_1	D12	NC	
1	IO_L27N_1/VREF_1	J12		
1	IO_L27P_1	H12		
1	IO_L26N_1	K14		
1	IO_L26P_1	J14		
1	IO_L25N_1	D11		
1	IO_L25P_1	C11		
1	IO_L21N_1	F11		
1	IO_L21P_1	E11		
1	IO_L20N_1	M14		
1	IO_L20P_1	M13		
1	IO_L19N_1	H11		
1	IO_L19P_1	G11		
1	IO_L09N_1/VREF_1	J11		
1	IO_L09P_1	J10		
1	IO_L08N_1	L13		
1	IO_L08P_1	L12		
1	IO_L07N_1	D10		
1	IO_L07P_1	C10		
1	IO_L06N_1	F10		
1	IO_L06P_1	E10		
1	IO_L05_1/No_Pair	K10		
1	IO_L03N_1/VREF_1	H10		
1	IO_L03P_1	G10		
1	IO_L02N_1	K12		
1	IO_L02P_1	K11		
1	IO_L01N_1/VRP_1	E9		

Table 12: **FF1517 — XC2VP50 and XC2VP70**

Bank	Pin Description	Pin Number	No Connects	
			XC2VP50	XC2VP70
1	IO_L01P_1/VRN_1	D9		
2	IO_L01N_2/VRP_2	C7		
2	IO_L01P_2/VRN_2	D7		
2	IO_L02N_2	G9		
2	IO_L02P_2	H9		
2	IO_L03N_2	C5		
2	IO_L03P_2	D5		
2	IO_L04N_2/VREF_2	D6		
2	IO_L04P_2	E6		
2	IO_L05N_2	H8		
2	IO_L05P_2	J9		
2	IO_L06N_2	E7		
2	IO_L06P_2	F7		
2	IO_L73N_2	D1	NC	
2	IO_L73P_2	D2	NC	
2	IO_L75N_2	E2	NC	
2	IO_L75P_2	E3	NC	
2	IO_L76N_2/VREF_2	F5	NC	
2	IO_L76P_2	G5	NC	
2	IO_L78N_2	F3	NC	
2	IO_L78P_2	F4	NC	
2	IO_L79N_2	F1	NC	
2	IO_L79P_2	F2	NC	
2	IO_L81N_2	G6	NC	
2	IO_L81P_2	G7	NC	
2	IO_L82N_2/VREF_2	G3	NC	
2	IO_L82P_2	G4	NC	
2	IO_L84N_2	G1	NC	
2	IO_L84P_2	G2	NC	
2	IO_L07N_2	H6		
2	IO_L07P_2	H7		
2	IO_L08N_2	K8		
2	IO_L08P_2	K9		
2	IO_L09N_2	H2		
2	IO_L09P_2	H3		
2	IO_L10N_2/VREF_2	J6		
2	IO_L10P_2	J7		

Table 12: **FF1517 — XC2VP50 and XC2VP70**

Bank	Pin Description	Pin Number	No Connects	
			XC2VP50	XC2VP70
2	IO_L11N_2	L9		
2	IO_L11P_2	M10		
2	IO_L12N_2	H4		
2	IO_L12P_2	J5		
2	IO_L13N_2	J1		
2	IO_L13P_2	J2		
2	IO_L14N_2	M8		
2	IO_L14P_2	N9		
2	IO_L15N_2	K6		
2	IO_L15P_2	K7		
2	IO_L16N_2/VREF_2	K4		
2	IO_L16P_2	K5		
2	IO_L17N_2	P10		
2	IO_L17P_2	N10		
2	IO_L18N_2	K3		
2	IO_L18P_2	J3		
2	IO_L19N_2	K1		
2	IO_L19P_2	K2		
2	IO_L20N_2	M11		
2	IO_L20P_2	N11		
2	IO_L21N_2	L7		
2	IO_L21P_2	L8		
2	IO_L22N_2/VREF_2	L5		
2	IO_L22P_2	L6		
2	IO_L23N_2	P8		
2	IO_L23P_2	P9		
2	IO_L24N_2	L3		
2	IO_L24P_2	L4		
2	IO_L25N_2	L1		
2	IO_L25P_2	L2		
2	IO_L26N_2	P11		
2	IO_L26P_2	P12		
2	IO_L27N_2	M6		
2	IO_L27P_2	M7		
2	IO_L28N_2/VREF_2	M2		
2	IO_L28P_2	M3		
2	IO_L29N_2	R9		
2	IO_L29P_2	R10		

Table 12: **FF1517 — XC2VP50 and XC2VP70**

Bank	Pin Description	Pin Number	No Connects	
			XC2VP50	XC2VP70
2	IO_L30N_2	N6		
2	IO_L30P_2	N7		
2	IO_L31N_2	M4		
2	IO_L31P_2	N5		
2	IO_L32N_2	R11		
2	IO_L32P_2	R12		
2	IO_L33N_2	N1		
2	IO_L33P_2	N2		
2	IO_L34N_2/VREF_2	P6		
2	IO_L34P_2	P7		
2	IO_L35N_2	R13		
2	IO_L35P_2	T13		
2	IO_L36N_2	P4		
2	IO_L36P_2	P5		
2	IO_L37N_2	P3		
2	IO_L37P_2	N3		
2	IO_L38N_2	T10		
2	IO_L38P_2	T11		
2	IO_L39N_2	P1		
2	IO_L39P_2	P2		
2	IO_L40N_2/VREF_2	R7		
2	IO_L40P_2	R8		
2	IO_L41N_2	T12		
2	IO_L41P_2	U12		
2	IO_L42N_2	R5		
2	IO_L42P_2	R6		
2	IO_L43N_2	R3		
2	IO_L43P_2	R4		
2	IO_L44N_2	U8		
2	IO_L44P_2	T8		
2	IO_L45N_2	R1		
2	IO_L45P_2	R2		
2	IO_L46N_2/VREF_2	T6		
2	IO_L46P_2	T7		
2	IO_L47N_2	U9		
2	IO_L47P_2	U10		
2	IO_L48N_2	T2		
2	IO_L48P_2	T3		

Table 12: **FF1517 — XC2VP50 and XC2VP70**

Bank	Pin Description	Pin Number	No Connects	
			XC2VP50	XC2VP70
2	IO_L49N_2	U5		
2	IO_L49P_2	U6		
2	IO_L50N_2	U13		
2	IO_L50P_2	V13		
2	IO_L51N_2	U4		
2	IO_L51P_2	T4		
2	IO_L52N_2/VREF_2	U1		
2	IO_L52P_2	U2		
2	IO_L53N_2	V9		
2	IO_L53P_2	V10		
2	IO_L54N_2	V7		
2	IO_L54P_2	V8		
2	IO_L55N_2	V5		
2	IO_L55P_2	V6		
2	IO_L56N_2	V11		
2	IO_L56P_2	V12		
2	IO_L57N_2	V3		
2	IO_L57P_2	V4		
2	IO_L58N_2/VREF_2	V1		
2	IO_L58P_2	V2		
2	IO_L59N_2	W10		
2	IO_L59P_2	W11		
2	IO_L60N_2	W7		
2	IO_L60P_2	W8		
2	IO_L85N_2	W5		
2	IO_L85P_2	W6		
2	IO_L86N_2	W12		
2	IO_L86P_2	W13		
2	IO_L87N_2	W3		
2	IO_L87P_2	W4		
2	IO_L88N_2/VREF_2	Y7		
2	IO_L88P_2	Y8		
2	IO_L89N_2	W9		
2	IO_L89P_2	Y9		
2	IO_L90N_2	Y3		
2	IO_L90P_2	Y4		
3	IO_L90N_3	AA7		

Table 12: **FF1517 — XC2VP50 and XC2VP70**

Bank	Pin Description	Pin Number	No Connects	
			XC2VP50	XC2VP70
3	IO_L90P_3	AA8		
3	IO_L89N_3	Y11		
3	IO_L89P_3	Y12		
3	IO_L88N_3	AA5		
3	IO_L88P_3	AA6		
3	IO_L87N_3/VREF_3	AA3		
3	IO_L87P_3	AA4		
3	IO_L86N_3	Y13		
3	IO_L86P_3	AA13		
3	IO_L85N_3	AB7		
3	IO_L85P_3	AB8		
3	IO_L60N_3	AB5		
3	IO_L60P_3	AB6		
3	IO_L59N_3	AA9		
3	IO_L59P_3	AA10		
3	IO_L58N_3	AB3		
3	IO_L58P_3	AB4		
3	IO_L57N_3/VREF_3	AB1		
3	IO_L57P_3	AB2		
3	IO_L56N_3	AA11		
3	IO_L56P_3	AA12		
3	IO_L55N_3	AC5		
3	IO_L55P_3	AC6		
3	IO_L54N_3	AC1		
3	IO_L54P_3	AC2		
3	IO_L53N_3	AB9		
3	IO_L53P_3	AB10		
3	IO_L52N_3	AC8		
3	IO_L52P_3	AD8		
3	IO_L51N_3/VREF_3	AC4		
3	IO_L51P_3	AD4		
3	IO_L50N_3	AB11		
3	IO_L50P_3	AB12		
3	IO_L49N_3	AD6		
3	IO_L49P_3	AD7		
3	IO_L48N_3	AD2		
3	IO_L48P_3	AD3		
3	IO_L47N_3	AC9		

Table 12: **FF1517 — XC2VP50 and XC2VP70**

Bank	Pin Description	Pin Number	No Connects	
			XC2VP50	XC2VP70
3	IO_L47P_3	AC10		
3	IO_L46N_3	AE7		
3	IO_L46P_3	AE8		
3	IO_L45N_3/VREF_3	AE5		
3	IO_L45P_3	AE6		
3	IO_L44N_3	AB13		
3	IO_L44P_3	AC13		
3	IO_L43N_3	AE3		
3	IO_L43P_3	AE4		
3	IO_L42N_3	AE1		
3	IO_L42P_3	AE2		
3	IO_L41N_3	AD10		
3	IO_L41P_3	AD11		
3	IO_L40N_3	AF6		
3	IO_L40P_3	AF7		
3	IO_L39N_3/VREF_3	AF4		
3	IO_L39P_3	AF5		
3	IO_L38N_3	AC12		
3	IO_L38P_3	AD12		
3	IO_L37N_3	AF1		
3	IO_L37P_3	AF2		
3	IO_L36N_3	AG6		
3	IO_L36P_3	AG7		
3	IO_L35N_3	AE9		
3	IO_L35P_3	AE10		
3	IO_L34N_3	AF3		
3	IO_L34P_3	AG3		
3	IO_L33N_3/VREF_3	AG1		
3	IO_L33P_3	AG2		
3	IO_L32N_3	AE11		
3	IO_L32P_3	AE12		
3	IO_L31N_3	AH6		
3	IO_L31P_3	AH7		
3	IO_L30N_3	AG5		
3	IO_L30P_3	AH4		
3	IO_L29N_3	AD13		
3	IO_L29P_3	AE13		
3	IO_L28N_3	AH2		

Table 12: **FF1517 — XC2VP50 and XC2VP70**

Bank	Pin Description	Pin Number	No Connects	
			XC2VP50	XC2VP70
3	IO_L28P_3	AH3		
3	IO_L27N_3/VREF_3	AJ7		
3	IO_L27P_3	AJ8		
3	IO_L26N_3	AF8		
3	IO_L26P_3	AF9		
3	IO_L25N_3	AJ5		
3	IO_L25P_3	AJ6		
3	IO_L24N_3	AJ3		
3	IO_L24P_3	AJ4		
3	IO_L23N_3	AF10		
3	IO_L23P_3	AG10		
3	IO_L22N_3	AJ1		
3	IO_L22P_3	AJ2		
3	IO_L21N_3/VREF_3	AK6		
3	IO_L21P_3	AK7		
3	IO_L20N_3	AF11		
3	IO_L20P_3	AF12		
3	IO_L19N_3	AK4		
3	IO_L19P_3	AK5		
3	IO_L18N_3	AK1		
3	IO_L18P_3	AK2		
3	IO_L17N_3	AG9		
3	IO_L17P_3	AH8		
3	IO_L16N_3	AL6		
3	IO_L16P_3	AL7		
3	IO_L15N_3/VREF_3	AK3		
3	IO_L15P_3	AL3		
3	IO_L14N_3	AG11		
3	IO_L14P_3	AH11		
3	IO_L13N_3	AL1		
3	IO_L13P_3	AL2		
3	IO_L12N_3	AM6		
3	IO_L12P_3	AM7		
3	IO_L11N_3	AH10		
3	IO_L11P_3	AJ9		
3	IO_L10N_3	AL5		
3	IO_L10P_3	AM4		
3	IO_L09N_3/VREF_3	AM2		

Table 12: **FF1517 — XC2VP50 and XC2VP70**

Bank	Pin Description	Pin Number	No Connects	
			XC2VP50	XC2VP70
3	IO_L09P_3	AM3		
3	IO_L08N_3	AK8		
3	IO_L08P_3	AK9		
3	IO_L07N_3	AN6		
3	IO_L07P_3	AN7		
3	IO_L84N_3	AN3	NC	
3	IO_L84P_3	AN4	NC	
3	IO_L82N_3	AN1	NC	
3	IO_L82P_3	AN2	NC	
3	IO_L81N_3/VREF_3	AN5	NC	
3	IO_L81P_3	AP5	NC	
3	IO_L79N_3	AP3	NC	
3	IO_L79P_3	AP4	NC	
3	IO_L78N_3	AP1	NC	
3	IO_L78P_3	AP2	NC	
3	IO_L76N_3	AR2	NC	
3	IO_L76P_3	AR3	NC	
3	IO_L75N_3/VREF_3	AT1	NC	
3	IO_L75P_3	AT2	NC	
3	IO_L73N_3	AT5	NC	
3	IO_L73P_3	AU5	NC	
3	IO_L06N_3	AR6		
3	IO_L06P_3	AT6		
3	IO_L05N_3	AL9		
3	IO_L05P_3	AM8		
3	IO_L04N_3	AP7		
3	IO_L04P_3	AR7		
3	IO_L03N_3/VREF_3	AM9		
3	IO_L03P_3	AN9		
3	IO_L02N_3	AR8		
3	IO_L02P_3	AT8		
3	IO_L01N_3/VRP_3	AT7		
3	IO_L01P_3/VRN_3	AU7		
4	IO_L01N_4/BUSY/DOUT(1)	AT9		
4	IO_L01P_4/INIT_B	AR9		
4	IO_L02N_4/D0/DIN(1)	AK11		
4	IO_L02P_4/D1	AK12		

Table 12: **FF1517 — XC2VP50 and XC2VP70**

Bank	Pin Description	Pin Number	No Connects	
			XC2VP50	XC2VP70
4	IO_L03N_4/D2	AN10		
4	IO_L03P_4/D3	AM10		
4	IO_L05_4/No_Pair	AK10		
4	IO_L06N_4/VRP_4	AR10		
4	IO_L06P_4/VRN_4	AP10		
4	IO_L07N_4	AU10		
4	IO_L07P_4/VREF_4	AT10		
4	IO_L08N_4	AJ12		
4	IO_L08P_4	AJ13		
4	IO_L09N_4	AL10		
4	IO_L09P_4/VREF_4	AL11		
4	IO_L19N_4	AN11		
4	IO_L19P_4	AM11		
4	IO_L20N_4	AH13		
4	IO_L20P_4	AH14		
4	IO_L21N_4	AR11		
4	IO_L21P_4	AP11		
4	IO_L25N_4	AU11		
4	IO_L25P_4	AT11		
4	IO_L26N_4	AL14		
4	IO_L26P_4	AK14		
4	IO_L27N_4	AM12		
4	IO_L27P_4/VREF_4	AL12		
4	IO_L28N_4	AT12	NC	
4	IO_L28P_4	AR12	NC	
4	IO_L29N_4	AJ14	NC	
4	IO_L29P_4	AJ15	NC	
4	IO_L30N_4	AM13	NC	
4	IO_L30P_4	AL13	NC	
4	IO_L34N_4	AP12	NC	
4	IO_L34P_4	AN13	NC	
4	IO_L35N_4	AL15	NC	
4	IO_L35P_4	AK15	NC	
4	IO_L36N_4	AT13	NC	
4	IO_L36P_4/VREF_4	AR13	NC	
4	IO_L37N_4	AN14		
4	IO_L37P_4	AM14		
4	IO_L38N_4	AH15		

Table 12: **FF1517 — XC2VP50 and XC2VP70**

Bank	Pin Description	Pin Number	No Connects	
			XC2VP50	XC2VP70
4	IO_L38P_4	AH16		
4	IO_L39N_4	AR14		
4	IO_L39P_4	AP14		
4	IO_L43N_4	AU14		
4	IO_L43P_4	AT14		
4	IO_L44N_4	AH17		
4	IO_L44P_4	AG17		
4	IO_L45N_4	AN15		
4	IO_L45P_4/VREF_4	AM15		
4	IO_L46N_4	AR15		
4	IO_L46P_4	AP15		
4	IO_L47N_4	AK16		
4	IO_L47P_4	AJ17		
4	IO_L48N_4	AU15		
4	IO_L48P_4	AT15		
4	IO_L49N_4	AM16		
4	IO_L49P_4	AL16		
4	IO_L50_4/No_Pair	AM17		
4	IO_L53_4/No_Pair	AL17		
4	IO_L54N_4	AP16		
4	IO_L54P_4	AN17		
4	IO_L55N_4	AR16		
4	IO_L55P_4	AR17		
4	IO_L56N_4	AH18		
4	IO_L56P_4	AG18		
4	IO_L57N_4	AU17		
4	IO_L57P_4/VREF_4	AT17		
4	IO_L58N_4	AM18		
4	IO_L58P_4	AL18		
4	IO_L59N_4	AK18		
4	IO_L59P_4	AJ18		
4	IO_L60N_4	AP18		
4	IO_L60P_4	AN18		
4	IO_L64N_4	AT18		
4	IO_L64P_4	AR18		
4	IO_L65N_4	AH19		
4	IO_L65P_4	AG19		
4	IO_L66N_4	AU18		

Table 12: **FF1517 — XC2VP50 and XC2VP70**

Bank	Pin Description	Pin Number	No Connects	
			XC2VP50	XC2VP70
4	IO_L66P_4/VREF_4	AU19		
4	IO_L67N_4	AM19		
4	IO_L67P_4	AL19		
4	IO_L68N_4	AK19		
4	IO_L68P_4	AJ19		
4	IO_L69N_4	AP19		
4	IO_L69P_4/VREF_4	AN19		
4	IO_L73N_4	AT19		
4	IO_L73P_4	AR19		
4	IO_L74N_4/GCLK3S	AH20		
4	IO_L74P_4/GCLK2P	AG20		
4	IO_L75N_4/GCLK1S	AL20		
4	IO_L75P_4/GCLK0P	AK20		
5	IO_L75N_5/GCLK7S	AR20		
5	IO_L75P_5/GCLK6P	AT20		
5	IO_L74N_5/GCLK5S	AH21		
5	IO_L74P_5/GCLK4P	AJ21		
5	IO_L73N_5	AP20		
5	IO_L73P_5	AP21		
5	IO_L69N_5/VREF_5	AU21		
5	IO_L69P_5	AU22		
5	IO_L68N_5	AK21		
5	IO_L68P_5	AL21		
5	IO_L67N_5	AR21		
5	IO_L67P_5	AT21		
5	IO_L66N_5/VREF_5	AN21		
5	IO_L66P_5	AN22		
5	IO_L65N_5	AM20		
5	IO_L65P_5	AM21		
5	IO_L64N_5	AR22		
5	IO_L64P_5	AT22		
5	IO_L60N_5	AP22		
5	IO_L60P_5	AR23		
5	IO_L59N_5	AG21		
5	IO_L59P_5	AG22		
5	IO_L58N_5	AL22		
5	IO_L58P_5	AM22		

Table 12: **FF1517 — XC2VP50 and XC2VP70**

Bank	Pin Description	Pin Number	No Connects	
			XC2VP50	XC2VP70
5	IO_L57N_5/VREF_5	AT23		
5	IO_L57P_5	AU23		
5	IO_L56N_5	AJ22		
5	IO_L56P_5	AK22		
5	IO_L55N_5	AN23		
5	IO_L55P_5	AP24		
5	IO_L54N_5	AL23		
5	IO_L54P_5	AM23		
5	IO_L53_5/No_Pair	AH23		
5	IO_L50_5/No_Pair	AG23		
5	IO_L49N_5	AR24		
5	IO_L49P_5	AR25		
5	IO_L48N_5	AL24		
5	IO_L48P_5	AM24		
5	IO_L47N_5	AH22		
5	IO_L47P_5	AJ23		
5	IO_L46N_5	AT25		
5	IO_L46P_5	AU25		
5	IO_L45N_5/VREF_5	AN25		
5	IO_L45P_5	AP25		
5	IO_L44N_5	AH24		
5	IO_L44P_5	AH25		
5	IO_L43N_5	AL25		
5	IO_L43P_5	AM25		
5	IO_L39N_5	AT26		
5	IO_L39P_5	AU26		
5	IO_L38N_5	AK24		
5	IO_L38P_5	AK25		
5	IO_L37N_5	AP26		
5	IO_L37P_5	AR26		
5	IO_L36N_5/VREF_5	AM26	NC	
5	IO_L36P_5	AN26	NC	
5	IO_L35N_5	AJ25	NC	
5	IO_L35P_5	AJ26	NC	
5	IO_L34N_5	AR27	NC	
5	IO_L34P_5	AT27	NC	
5	IO_L30N_5	AN27	NC	
5	IO_L30P_5	AP28	NC	

Table 12: **FF1517 — XC2VP50 and XC2VP70**

Bank	Pin Description	Pin Number	No Connects	
			XC2VP50	XC2VP70
5	IO_L29N_5	AK26	NC	
5	IO_L29P_5	AL26	NC	
5	IO_L28N_5	AL27	NC	
5	IO_L28P_5	AM27	NC	
5	IO_L27N_5/VREF_5	AR28		
5	IO_L27P_5	AT28		
5	IO_L26N_5	AH26		
5	IO_L26P_5	AH27		
5	IO_L25N_5	AL28		
5	IO_L25P_5	AM28		
5	IO_L21N_5	AT29		
5	IO_L21P_5	AU29		
5	IO_L20N_5	AJ27		
5	IO_L20P_5	AJ28		
5	IO_L19N_5	AP29		
5	IO_L19P_5	AR29		
5	IO_L09N_5/VREF_5	AM29		
5	IO_L09P_5	AN29		
5	IO_L08N_5	AK29		
5	IO_L08P_5	AL29		
5	IO_L07N_5/VREF_5	AT30		
5	IO_L07P_5	AU30		
5	IO_L06N_5/VRP_5	AP30		
5	IO_L06P_5/VRN_5	AR30		
5	IO_L05_5/No_Pair	AK28		
5	IO_L03N_5/D4	AM30		
5	IO_L03P_5/D5	AN30		
5	IO_L02N_5/D6	AL30		
5	IO_L02P_5/D7	AK30		
5	IO_L01N_5/RDWR_B	AR31		
5	IO_L01P_5/CS_B	AT31		
6	IO_L01P_6/VRN_6	AU33		
6	IO_L01N_6/VRP_6	AT33		
6	IO_L02P_6	AT32		
6	IO_L02N_6	AR32		
6	IO_L03P_6	AN31		
6	IO_L03N_6/VREF_6	AM31		

Table 12: **FF1517 — XC2VP50 and XC2VP70**

Bank	Pin Description	Pin Number	No Connects	
			XC2VP50	XC2VP70
6	IO_L04P_6	AR33		
6	IO_L04N_6	AP33		
6	IO_L05P_6	AM32		
6	IO_L05N_6	AL31		
6	IO_L06P_6	AT34		
6	IO_L06N_6	AR34		
6	IO_L73P_6	AU35	NC	
6	IO_L73N_6	AT35	NC	
6	IO_L75P_6	AT38	NC	
6	IO_L75N_6/VREF_6	AT39	NC	
6	IO_L76P_6	AR37	NC	
6	IO_L76N_6	AR38	NC	
6	IO_L78P_6	AP38	NC	
6	IO_L78N_6	AP39	NC	
6	IO_L79P_6	AP36	NC	
6	IO_L79N_6	AP37	NC	
6	IO_L81P_6	AP35	NC	
6	IO_L81N_6/VREF_6	AN35	NC	
6	IO_L82P_6	AN38	NC	
6	IO_L82N_6	AN39	NC	
6	IO_L84P_6	AN36	NC	
6	IO_L84N_6	AN37	NC	
6	IO_L07P_6	AN33		
6	IO_L07N_6	AN34		
6	IO_L08P_6	AK31		
6	IO_L08N_6	AK32		
6	IO_L09P_6	AM37		
6	IO_L09N_6/VREF_6	AM38		
6	IO_L10P_6	AM36		
6	IO_L10N_6	AL35		
6	IO_L11P_6	AJ31		
6	IO_L11N_6	AH30		
6	IO_L12P_6	AM33		
6	IO_L12N_6	AM34		
6	IO_L13P_6	AL38		
6	IO_L13N_6	AL39		
6	IO_L14P_6	AH29		
6	IO_L14N_6	AG29		

Table 12: **FF1517 — XC2VP50 and XC2VP70**

Bank	Pin Description	Pin Number	No Connects	
			XC2VP50	XC2VP70
6	IO_L15P_6	AL37		
6	IO_L15N_6/VREF_6	AK37		
6	IO_L16P_6	AL33		
6	IO_L16N_6	AL34		
6	IO_L17P_6	AH32		
6	IO_L17N_6	AG31		
6	IO_L18P_6	AK38		
6	IO_L18N_6	AK39		
6	IO_L19P_6	AK35		
6	IO_L19N_6	AK36		
6	IO_L20P_6	AF28		
6	IO_L20N_6	AF29		
6	IO_L21P_6	AK33		
6	IO_L21N_6/VREF_6	AK34		
6	IO_L22P_6	AJ38		
6	IO_L22N_6	AJ39		
6	IO_L23P_6	AG30		
6	IO_L23N_6	AF30		
6	IO_L24P_6	AJ36		
6	IO_L24N_6	AJ37		
6	IO_L25P_6	AJ34		
6	IO_L25N_6	AJ35		
6	IO_L26P_6	AF31		
6	IO_L26N_6	AF32		
6	IO_L27P_6	AJ32		
6	IO_L27N_6/VREF_6	AJ33		
6	IO_L28P_6	AH37		
6	IO_L28N_6	AH38		
6	IO_L29P_6	AE27		
6	IO_L29N_6	AD27		
6	IO_L30P_6	AH36		
6	IO_L30N_6	AG35		
6	IO_L31P_6	AH33		
6	IO_L31N_6	AH34		
6	IO_L32P_6	AE28		
6	IO_L32N_6	AE29		
6	IO_L33P_6	AG38		
6	IO_L33N_6/VREF_6	AG39		

Table 12: **FF1517 — XC2VP50 and XC2VP70**

Bank	Pin Description	Pin Number	No Connects	
			XC2VP50	XC2VP70
6	IO_L34P_6	AG37		
6	IO_L34N_6	AF37		
6	IO_L35P_6	AE30		
6	IO_L35N_6	AE31		
6	IO_L36P_6	AG33		
6	IO_L36N_6	AG34		
6	IO_L37P_6	AF38		
6	IO_L37N_6	AF39		
6	IO_L38P_6	AD28		
6	IO_L38N_6	AC28		
6	IO_L39P_6	AF35		
6	IO_L39N_6/VREF_6	AF36		
6	IO_L40P_6	AF33		
6	IO_L40N_6	AF34		
6	IO_L41P_6	AD29		
6	IO_L41N_6	AD30		
6	IO_L42P_6	AE38		
6	IO_L42N_6	AE39		
6	IO_L43P_6	AE36		
6	IO_L43N_6	AE37		
6	IO_L44P_6	AC27		
6	IO_L44N_6	AB27		
6	IO_L45P_6	AE34		
6	IO_L45N_6/VREF_6	AE35		
6	IO_L46P_6	AE32		
6	IO_L46N_6	AE33		
6	IO_L47P_6	AC30		
6	IO_L47N_6	AC31		
6	IO_L48P_6	AD37		
6	IO_L48N_6	AD38		
6	IO_L49P_6	AD33		
6	IO_L49N_6	AD34		
6	IO_L50P_6	AB28		
6	IO_L50N_6	AB29		
6	IO_L51P_6	AD36		
6	IO_L51N_6/VREF_6	AC36		
6	IO_L52P_6	AD32		
6	IO_L52N_6	AC32		

Table 12: **FF1517 — XC2VP50 and XC2VP70**

Bank	Pin Description	Pin Number	No Connects	
			XC2VP50	XC2VP70
6	IO_L53P_6	AB30		
6	IO_L53N_6	AB31		
6	IO_L54P_6	AC38		
6	IO_L54N_6	AC39		
6	IO_L55P_6	AC34		
6	IO_L55N_6	AC35		
6	IO_L56P_6	AA28		
6	IO_L56N_6	AA29		
6	IO_L57P_6	AB38		
6	IO_L57N_6/VREF_6	AB39		
6	IO_L58P_6	AB36		
6	IO_L58N_6	AB37		
6	IO_L59P_6	AA30		
6	IO_L59N_6	AA31		
6	IO_L60P_6	AB34		
6	IO_L60N_6	AB35		
6	IO_L85P_6	AB32		
6	IO_L85N_6	AB33		
6	IO_L86P_6	AA27		
6	IO_L86N_6	Y27		
6	IO_L87P_6	AA36		
6	IO_L87N_6/VREF_6	AA37		
6	IO_L88P_6	AA34		
6	IO_L88N_6	AA35		
6	IO_L89P_6	Y28		
6	IO_L89N_6	Y29		
6	IO_L90P_6	AA32		
6	IO_L90N_6	AA33		
7	IO_L90P_7	Y36		
7	IO_L90N_7	Y37		
7	IO_L89P_7	Y31		
7	IO_L89N_7	W31		
7	IO_L88P_7	Y32		
7	IO_L88N_7/VREF_7	Y33		
7	IO_L87P_7	W36		
7	IO_L87N_7	W37		
7	IO_L86P_7	W27		

Table 12: **FF1517 — XC2VP50 and XC2VP70**

Bank	Pin Description	Pin Number	No Connects	
			XC2VP50	XC2VP70
7	IO_L86N_7	W28		
7	IO_L85P_7	W34		
7	IO_L85N_7	W35		
7	IO_L60P_7	W32		
7	IO_L60N_7	W33		
7	IO_L59P_7	W29		
7	IO_L59N_7	W30		
7	IO_L58P_7	V38		
7	IO_L58N_7/VREF_7	V39		
7	IO_L57P_7	V36		
7	IO_L57N_7	V37		
7	IO_L56P_7	V28		
7	IO_L56N_7	V29		
7	IO_L55P_7	V34		
7	IO_L55N_7	V35		
7	IO_L54P_7	V32		
7	IO_L54N_7	V33		
7	IO_L53P_7	V30		
7	IO_L53N_7	V31		
7	IO_L52P_7	U38		
7	IO_L52N_7/VREF_7	U39		
7	IO_L51P_7	T36		
7	IO_L51N_7	U36		
7	IO_L50P_7	V27		
7	IO_L50N_7	U27		
7	IO_L49P_7	U34		
7	IO_L49N_7	U35		
7	IO_L48P_7	T37		
7	IO_L48N_7	T38		
7	IO_L47P_7	U30		
7	IO_L47N_7	U31		
7	IO_L46P_7	T33		
7	IO_L46N_7/VREF_7	T34		
7	IO_L45P_7	R38		
7	IO_L45N_7	R39		
7	IO_L44P_7	T32		
7	IO_L44N_7	U32		
7	IO_L43P_7	R36		

Table 12: **FF1517 — XC2VP50 and XC2VP70**

Bank	Pin Description	Pin Number	No Connects	
			XC2VP50	XC2VP70
7	IO_L43N_7	R37		
7	IO_L42P_7	R34		
7	IO_L42N_7	R35		
7	IO_L41P_7	U28		
7	IO_L41N_7	T28		
7	IO_L40P_7	R32		
7	IO_L40N_7/VREF_7	R33		
7	IO_L39P_7	P38		
7	IO_L39N_7	P39		
7	IO_L38P_7	T29		
7	IO_L38N_7	T30		
7	IO_L37P_7	N37		
7	IO_L37N_7	P37		
7	IO_L36P_7	P35		
7	IO_L36N_7	P36		
7	IO_L35P_7	T27		
7	IO_L35N_7	R27		
7	IO_L34P_7	P33		
7	IO_L34N_7/VREF_7	P34		
7	IO_L33P_7	N38		
7	IO_L33N_7	N39		
7	IO_L32P_7	R28		
7	IO_L32N_7	R29		
7	IO_L31P_7	N35		
7	IO_L31N_7	M36		
7	IO_L30P_7	N33		
7	IO_L30N_7	N34		
7	IO_L29P_7	R30		
7	IO_L29N_7	R31		
7	IO_L28P_7	M37		
7	IO_L28N_7/VREF_7	M38		
7	IO_L27P_7	M33		
7	IO_L27N_7	M34		
7	IO_L26P_7	P28		
7	IO_L26N_7	P29		
7	IO_L25P_7	L38		
7	IO_L25N_7	L39		
7	IO_L24P_7	L36		

Table 12: **FF1517 — XC2VP50 and XC2VP70**

Bank	Pin Description	Pin Number	No Connects	
			XC2VP50	XC2VP70
7	IO_L24N_7	L37		
7	IO_L23P_7	P31		
7	IO_L23N_7	P32		
7	IO_L22P_7	L34		
7	IO_L22N_7/VREF_7	L35		
7	IO_L21P_7	L32		
7	IO_L21N_7	L33		
7	IO_L20P_7	N29		
7	IO_L20N_7	M29		
7	IO_L19P_7	K38		
7	IO_L19N_7	K39		
7	IO_L18P_7	J37		
7	IO_L18N_7	K37		
7	IO_L17P_7	N30		
7	IO_L17N_7	P30		
7	IO_L16P_7	K35		
7	IO_L16N_7/VREF_7	K36		
7	IO_L15P_7	K34		
7	IO_L15N_7	K33		
7	IO_L14P_7	N31		
7	IO_L14N_7	M32		
7	IO_L13P_7	J38		
7	IO_L13N_7	J39		
7	IO_L12P_7	J35		
7	IO_L12N_7	H36		
7	IO_L11P_7	M30		
7	IO_L11N_7	L31		
7	IO_L10P_7	J33		
7	IO_L10N_7/VREF_7	J34		
7	IO_L09P_7	H37		
7	IO_L09N_7	H38		
7	IO_L08P_7	K31		
7	IO_L08N_7	K32		
7	IO_L07P_7	H33		
7	IO_L07N_7	H34		
7	IO_L84P_7	G38	NC	
7	IO_L84N_7	G39	NC	
7	IO_L82P_7	G36	NC	

Table 12: **FF1517 — XC2VP50 and XC2VP70**

Bank	Pin Description	Pin Number	No Connects	
			XC2VP50	XC2VP70
7	IO_L82N_7/VREF_7	G37	NC	
7	IO_L81P_7	G33	NC	
7	IO_L81N_7	G34	NC	
7	IO_L79P_7	F38	NC	
7	IO_L79N_7	F39	NC	
7	IO_L78P_7	F36	NC	
7	IO_L78N_7	F37	NC	
7	IO_L76P_7	G35	NC	
7	IO_L76N_7/VREF_7	F35	NC	
7	IO_L75P_7	E37	NC	
7	IO_L75N_7	E38	NC	
7	IO_L73P_7	D38	NC	
7	IO_L73N_7	D39	NC	
7	IO_L06P_7	F33		
7	IO_L06N_7	E33		
7	IO_L05P_7	J31		
7	IO_L05N_7	H32		
7	IO_L04P_7	E34		
7	IO_L04N_7/VREF_7	D34		
7	IO_L03P_7	D35		
7	IO_L03N_7	C35		
7	IO_L02P_7	H31		
7	IO_L02N_7	G31		
7	IO_L01P_7/VRN_7	D33		
7	IO_L01N_7/VRP_7	C33		
7	VCCO_7	E39		
7	VCCO_7	U37		
7	VCCO_7	N36		
7	VCCO_7	J36		
7	VCCO_7	E36		
7	VCCO_7	Y35		
7	VCCO_7	U33		
7	VCCO_7	N32		
7	VCCO_7	J32		
7	VCCO_7	F32		
7	VCCO_7	U29		
7	VCCO_7	N28		

Table 12: **FF1517 — XC2VP50 and XC2VP70**

Bank	Pin Description	Pin Number	No Connects	
			XC2VP50	XC2VP70
7	VCCO_7	P27		
7	VCCO_7	W26		
7	VCCO_7	V26		
7	VCCO_7	U26		
7	VCCO_7	T26		
7	VCCO_7	R26		
6	VCCO_6	AR39		
6	VCCO_6	AC37		
6	VCCO_6	AR36		
6	VCCO_6	AL36		
6	VCCO_6	AG36		
6	VCCO_6	AC33		
6	VCCO_6	AP32		
6	VCCO_6	AL32		
6	VCCO_6	AG32		
6	VCCO_6	AC29		
6	VCCO_6	AG28		
6	VCCO_6	AF27		
6	VCCO_6	AE26		
6	VCCO_6	AD26		
6	VCCO_6	AC26		
6	VCCO_6	AB26		
6	VCCO_6	AA26		
6	VCCO_6	Y26		
5	VCCO_5	AP27		
5	VCCO_5	AK27		
5	VCCO_5	AG26		
5	VCCO_5	AG25		
5	VCCO_5	AF25		
5	VCCO_5	AG24		
5	VCCO_5	AF24		
5	VCCO_5	AP23		
5	VCCO_5	AK23		
5	VCCO_5	AF23		
5	VCCO_5	AF22		
5	VCCO_5	AF21		
4	VCCO_4	AF19		
4	VCCO_4	AF18		

Table 12: **FF1517 — XC2VP50 and XC2VP70**

Bank	Pin Description	Pin Number	No Connects	
			XC2VP50	XC2VP70
4	VCCO_4	AP17		
4	VCCO_4	AK17		
4	VCCO_4	AF17		
4	VCCO_4	AG16		
4	VCCO_4	AF16		
4	VCCO_4	AG15		
4	VCCO_4	AF15		
4	VCCO_4	AG14		
4	VCCO_4	AP13		
4	VCCO_4	AK13		
3	VCCO_3	AE14		
3	VCCO_3	AD14		
3	VCCO_3	AC14		
3	VCCO_3	AB14		
3	VCCO_3	AA14		
3	VCCO_3	Y14		
3	VCCO_3	AF13		
3	VCCO_3	AG12		
3	VCCO_3	AC11		
3	VCCO_3	AP8		
3	VCCO_3	AL8		
3	VCCO_3	AG8		
3	VCCO_3	AC7		
3	VCCO_3	AR4		
3	VCCO_3	AL4		
3	VCCO_3	AG4		
3	VCCO_3	AC3		
3	VCCO_3	AR1		
2	VCCO_2	W14		
2	VCCO_2	V14		
2	VCCO_2	U14		
2	VCCO_2	T14		
2	VCCO_2	R14		
2	VCCO_2	P13		
2	VCCO_2	N12		
2	VCCO_2	U11		
2	VCCO_2	N8		
2	VCCO_2	J8		

Table 12: **FF1517 — XC2VP50 and XC2VP70**

Bank	Pin Description	Pin Number	No Connects	
			XC2VP50	XC2VP70
2	VCCO_2	F8		
2	VCCO_2	U7		
2	VCCO_2	Y5		
2	VCCO_2	N4		
2	VCCO_2	J4		
2	VCCO_2	E4		
2	VCCO_2	U3		
2	VCCO_2	E1		
1	VCCO_1	N14		
1	VCCO_1	K13		
1	VCCO_1	F13		
1	VCCO_1	P19		
1	VCCO_1	P18		
1	VCCO_1	P17		
1	VCCO_1	K17		
1	VCCO_1	F17		
1	VCCO_1	P16		
1	VCCO_1	N16		
1	VCCO_1	P15		
1	VCCO_1	N15		
0	VCCO_0	K27		
0	VCCO_0	F27		
0	VCCO_0	N26		
0	VCCO_0	P25		
0	VCCO_0	N25		
0	VCCO_0	P24		
0	VCCO_0	N24		
0	VCCO_0	P23		
0	VCCO_0	K23		
0	VCCO_0	F23		
0	VCCO_0	P22		
0	VCCO_0	P21		
N/A	CCLK	AJ10		
N/A	PROG_B	D32		
N/A	DONE	AJ11		
N/A	M0	AP31		
N/A	M1	AJ30		

Table 12: **FF1517 — XC2VP50 and XC2VP70**

Bank	Pin Description	Pin Number	No Connects	
			XC2VP50	XC2VP70
N/A	M2	AJ29		
N/A	TCK	E8		
N/A	TDI	L30		
N/A	TDO	L10		
N/A	TMS	F9		
N/A	PWRDWN_B	AP9		
N/A	HSWAP_EN	E32		
N/A	RSVD	D8		
N/A	VBATT	L11		
N/A	DXP	L29		
N/A	DXN	F31		
N/A	AVCCAUXTX2	B35		
N/A	VTTXPAD2	B36		
N/A	TXNPAD2	A36		
N/A	TXPPAD2	A35		
N/A	GNDA2	C34		
N/A	RXPPAD2	A34		
N/A	RXNPAD2	A33		
N/A	VTRXPAD2	B34		
N/A	AVCCAUXRX2	B33		
N/A	AVCCAUXTX4	B31		
N/A	VTTXPAD4	B32		
N/A	TXNPAD4	A32		
N/A	TXPPAD4	A31		
N/A	GNDA4	C31		
N/A	RXPPAD4	A30		
N/A	RXNPAD4	A29		
N/A	VTRXPAD4	B30		
N/A	AVCCAUXRX4	B29		
N/A	AVCCAUXTX5	B27		
N/A	VTTXPAD5	B28		
N/A	TXNPAD5	A28		
N/A	TXPPAD5	A27		
N/A	GNDA5	C27		
N/A	RXPPAD5	A26		
N/A	RXNPAD5	A25		
N/A	VTRXPAD5	B26		
N/A	AVCCAUXRX5	B25		

Table 12: **FF1517 — XC2VP50 and XC2VP70**

Bank	Pin Description	Pin Number	No Connects	
			XC2VP50	XC2VP70
N/A	AVCCAUXTX6	B23		
N/A	VTTXPAD6	B24		
N/A	TXNPAD6	A24		
N/A	TXPPAD6	A23		
N/A	GNDA6	C24		
N/A	RXPPAD6	A22		
N/A	RXNPAD6	A21		
N/A	VTRXPAD6	B22		
N/A	AVCCAUXRX6	B21		
N/A	AVCCAUXTX7	B18		
N/A	VTTXPAD7	B19		
N/A	TXNPAD7	A19		
N/A	TXPPAD7	A18		
N/A	GNDA7	C16		
N/A	RXPPAD7	A17		
N/A	RXNPAD7	A16		
N/A	VTRXPAD7	B17		
N/A	AVCCAUXRX7	B16		
N/A	AVCCAUXTX8	B14		
N/A	VTTXPAD8	B15		
N/A	TXNPAD8	A15		
N/A	TXPPAD8	A14		
N/A	GNDA8	C13		
N/A	RXPPAD8	A13		
N/A	RXNPAD8	A12		
N/A	VTRXPAD8	B13		
N/A	AVCCAUXRX8	B12		
N/A	AVCCAUXTX9	B10		
N/A	VTTXPAD9	B11		
N/A	TXNPAD9	A11		
N/A	TXPPAD9	A10		
N/A	GNDA9	C9		
N/A	RXPPAD9	A9		
N/A	RXNPAD9	A8		
N/A	VTRXPAD9	B9		
N/A	AVCCAUXRX9	B8		
N/A	AVCCAUXTX11	B6		
N/A	VTTXPAD11	B7		

Table 12: **FF1517 — XC2VP50 and XC2VP70**

Bank	Pin Description	Pin Number	No Connects	
			XC2VP50	XC2VP70
N/A	TXNPAD11	A7		
N/A	TXPPAD11	A6		
N/A	GNDA11	C6		
N/A	RXPPAD11	A5		
N/A	RXNPAD11	A4		
N/A	VTRXPAD11	B5		
N/A	AVCCAUXRX11	B4		
N/A	AVCCAUXRX14	AV4		
N/A	VTRXPAD14	AV5		
N/A	RXNPAD14	AW4		
N/A	RXPPAD14	AW5		
N/A	GNDA14	AU6		
N/A	TXPPAD14	AW6		
N/A	TXNPAD14	AW7		
N/A	VTTXPAD14	AV7		
N/A	AVCCAUXTX14	AV6		
N/A	AVCCAUXRX16	AV8		
N/A	VTRXPAD16	AV9		
N/A	RXNPAD16	AW8		
N/A	RXPPAD16	AW9		
N/A	GNDA16	AU9		
N/A	TXPPAD16	AW10		
N/A	TXNPAD16	AW11		
N/A	VTTXPAD16	AV11		
N/A	AVCCAUXTX16	AV10		
N/A	AVCCAUXRX17	AV12		
N/A	VTRXPAD17	AV13		
N/A	RXNPAD17	AW12		
N/A	RXPPAD17	AW13		
N/A	GNDA17	AU13		
N/A	TXPPAD17	AW14		
N/A	TXNPAD17	AW15		
N/A	VTTXPAD17	AV15		
N/A	AVCCAUXTX17	AV14		
N/A	AVCCAUXRX18	AV16		
N/A	VTRXPAD18	AV17		
N/A	RXNPAD18	AW16		
N/A	RXPPAD18	AW17		

Table 12: **FF1517 — XC2VP50 and XC2VP70**

Bank	Pin Description	Pin Number	No Connects	
			XC2VP50	XC2VP70
N/A	GNDA18	AU16		
N/A	TXPPAD18	AW18		
N/A	TXNPAD18	AW19		
N/A	VTTXPAD18	AV19		
N/A	AVCCAUXTX18	AV18		
N/A	AVCCAUXRX19	AV21		
N/A	VTRXPAD19	AV22		
N/A	RXNPAD19	AW21		
N/A	RXPPAD19	AW22		
N/A	GNDA19	AU24		
N/A	TXPPAD19	AW23		
N/A	TXNPAD19	AW24		
N/A	VTTXPAD19	AV24		
N/A	AVCCAUXTX19	AV23		
N/A	AVCCAUXRX20	AV25		
N/A	VTRXPAD20	AV26		
N/A	RXNPAD20	AW25		
N/A	RXPPAD20	AW26		
N/A	GNDA20	AU27		
N/A	TXPPAD20	AW27		
N/A	TXNPAD20	AW28		
N/A	VTTXPAD20	AV28		
N/A	AVCCAUXTX20	AV27		
N/A	AVCCAUXRX21	AV29		
N/A	VTRXPAD21	AV30		
N/A	RXNPAD21	AW29		
N/A	RXPPAD21	AW30		
N/A	GNDA21	AU31		
N/A	TXPPAD21	AW31		
N/A	TXNPAD21	AW32		
N/A	VTTXPAD21	AV32		
N/A	AVCCAUXTX21	AV31		
N/A	AVCCAUXRX23	AV33		
N/A	VTRXPAD23	AV34		
N/A	RXNPAD23	AW33		
N/A	RXPPAD23	AW34		
N/A	GNDA23	AU34		
N/A	TXPPAD23	AW35		

Table 12: **FF1517 — XC2VP50 and XC2VP70**

Bank	Pin Description	Pin Number	No Connects	
			XC2VP50	XC2VP70
N/A	TXNPAD23	AW36		
N/A	VTTXPAD23	AV36		
N/A	AVCCAUXTX23	AV35		
N/A	VCCINT	AH28		
N/A	VCCINT	M28		
N/A	VCCINT	AG27		
N/A	VCCINT	N27		
N/A	VCCINT	AF26		
N/A	VCCINT	P26		
N/A	VCCINT	AE25		
N/A	VCCINT	AD25		
N/A	VCCINT	AC25		
N/A	VCCINT	AB25		
N/A	VCCINT	AA25		
N/A	VCCINT	Y25		
N/A	VCCINT	W25		
N/A	VCCINT	V25		
N/A	VCCINT	U25		
N/A	VCCINT	T25		
N/A	VCCINT	R25		
N/A	VCCINT	AE24		
N/A	VCCINT	AD24		
N/A	VCCINT	T24		
N/A	VCCINT	R24		
N/A	VCCINT	AE23		
N/A	VCCINT	R23		
N/A	VCCINT	AE22		
N/A	VCCINT	R22		
N/A	VCCINT	AE21		
N/A	VCCINT	R21		
N/A	VCCINT	AE20		
N/A	VCCINT	R20		
N/A	VCCINT	AE19		
N/A	VCCINT	R19		
N/A	VCCINT	AE18		
N/A	VCCINT	R18		
N/A	VCCINT	AE17		

Table 12: **FF1517 — XC2VP50 and XC2VP70**

Bank	Pin Description	Pin Number	No Connects	
			XC2VP50	XC2VP70
N/A	VCCINT	R17		
N/A	VCCINT	AE16		
N/A	VCCINT	AD16		
N/A	VCCINT	T16		
N/A	VCCINT	R16		
N/A	VCCINT	AE15		
N/A	VCCINT	AD15		
N/A	VCCINT	AC15		
N/A	VCCINT	AB15		
N/A	VCCINT	AA15		
N/A	VCCINT	Y15		
N/A	VCCINT	W15		
N/A	VCCINT	V15		
N/A	VCCINT	U15		
N/A	VCCINT	T15		
N/A	VCCINT	R15		
N/A	VCCINT	AF14		
N/A	VCCINT	P14		
N/A	VCCINT	AG13		
N/A	VCCINT	N13		
N/A	VCCINT	AH12		
N/A	VCCINT	M12		
N/A	VCCAUX	AV39		
N/A	VCCAUX	AA39		
N/A	VCCAUX	Y39		
N/A	VCCAUX	W39		
N/A	VCCAUX	B39		
N/A	VCCAUX	AW38		
N/A	VCCAUX	Y38		
N/A	VCCAUX	A38		
N/A	VCCAUX	AR35		
N/A	VCCAUX	E35		
N/A	VCCAUX	AP34		
N/A	VCCAUX	F34		
N/A	VCCAUX	AW20		
N/A	VCCAUX	AV20		
N/A	VCCAUX	B20		
N/A	VCCAUX	A20		

Table 12: **FF1517 — XC2VP50 and XC2VP70**

Bank	Pin Description	Pin Number	No Connects	
			XC2VP50	XC2VP70
N/A	VCCAUX	AP6		
N/A	VCCAUX	F6		
N/A	VCCAUX	AR5		
N/A	VCCAUX	E5		
N/A	VCCAUX	AW2		
N/A	VCCAUX	Y2		
N/A	VCCAUX	A2		
N/A	VCCAUX	AV1		
N/A	VCCAUX	AA1		
N/A	VCCAUX	Y1		
N/A	VCCAUX	W1		
N/A	VCCAUX	B1		
N/A	GND	A3		
N/A	GND	AV2		
N/A	GND	AU2		
N/A	GND	AA2		
N/A	GND	W2		
N/A	GND	C2		
N/A	GND	B2		
N/A	GND	AU1		
N/A	GND	AM1		
N/A	GND	AH1		
N/A	GND	AD1		
N/A	GND	T1		
N/A	GND	M1		
N/A	GND	H1		
N/A	GND	C1		
N/A	GND	AD5		
N/A	GND	T5		
N/A	GND	M5		
N/A	GND	H5		
N/A	GND	AU4		
N/A	GND	AT4		
N/A	GND	D4		
N/A	GND	C4		
N/A	GND	AW3		
N/A	GND	AV3		

Table 12: **FF1517 — XC2VP50 and XC2VP70**

Bank	Pin Description	Pin Number	No Connects	
			XC2VP50	XC2VP70
N/A	GND	AU3		
N/A	GND	AT3		
N/A	GND	D3		
N/A	GND	C3		
N/A	GND	B3		
N/A	GND	AN12		
N/A	GND	G12		
N/A	GND	C12		
N/A	GND	Y10		
N/A	GND	AH9		
N/A	GND	AD9		
N/A	GND	T9		
N/A	GND	M9		
N/A	GND	AU8		
N/A	GND	AN8		
N/A	GND	G8		
N/A	GND	C8		
N/A	GND	Y6		
N/A	GND	AM5		
N/A	GND	AH5		
N/A	GND	T17		
N/A	GND	AT16		
N/A	GND	AN16		
N/A	GND	AJ16		
N/A	GND	AC16		
N/A	GND	AB16		
N/A	GND	AA16		
N/A	GND	Y16		
N/A	GND	W16		
N/A	GND	V16		
N/A	GND	U16		
N/A	GND	L16		
N/A	GND	G16		
N/A	GND	D16		
N/A	GND	AU12		
N/A	GND	AB18		
N/A	GND	AA18		
N/A	GND	Y18		

Table 12: **FF1517 — XC2VP50 and XC2VP70**

Bank	Pin Description	Pin Number	No Connects	
			XC2VP50	XC2VP70
N/A	GND	W18		
N/A	GND	V18		
N/A	GND	U18		
N/A	GND	T18		
N/A	GND	AD17		
N/A	GND	AC17		
N/A	GND	AB17		
N/A	GND	AA17		
N/A	GND	Y17		
N/A	GND	W17		
N/A	GND	V17		
N/A	GND	U17		
N/A	GND	P20		
N/A	GND	L20		
N/A	GND	G20		
N/A	GND	C20		
N/A	GND	AD19		
N/A	GND	AC19		
N/A	GND	AB19		
N/A	GND	AA19		
N/A	GND	Y19		
N/A	GND	W19		
N/A	GND	V19		
N/A	GND	U19		
N/A	GND	T19		
N/A	GND	AD18		
N/A	GND	AC18		
N/A	GND	U21		
N/A	GND	T21		
N/A	GND	AU20		
N/A	GND	AN20		
N/A	GND	AJ20		
N/A	GND	AF20		
N/A	GND	AD20		
N/A	GND	AC20		
N/A	GND	AB20		
N/A	GND	AA20		
N/A	GND	Y20		

Table 12: **FF1517 — XC2VP50 and XC2VP70**

Bank	Pin Description	Pin Number	No Connects	
			XC2VP50	XC2VP70
N/A	GND	W20		
N/A	GND	V20		
N/A	GND	U20		
N/A	GND	T20		
N/A	GND	AC22		
N/A	GND	AB22		
N/A	GND	AA22		
N/A	GND	Y22		
N/A	GND	W22		
N/A	GND	V22		
N/A	GND	U22		
N/A	GND	T22		
N/A	GND	AD21		
N/A	GND	AC21		
N/A	GND	AB21		
N/A	GND	AA21		
N/A	GND	Y21		
N/A	GND	W21		
N/A	GND	V21		
N/A	GND	B38		
N/A	GND	AW37		
N/A	GND	AV37		
N/A	GND	AU37		
N/A	GND	AT37		
N/A	GND	D37		
N/A	GND	C37		
N/A	GND	B37		
N/A	GND	A37		
N/A	GND	AU36		
N/A	GND	AT36		
N/A	GND	D36		
N/A	GND	C36		
N/A	GND	AM35		
N/A	GND	AH35		
N/A	GND	AD35		
N/A	GND	T35		
N/A	GND	M35		
N/A	GND	H35		

Table 12: **FF1517 — XC2VP50 and XC2VP70**

Bank	Pin Description	Pin Number	No Connects	
			XC2VP50	XC2VP70
N/A	GND	Y34		
N/A	GND	AU32		
N/A	GND	AN32		
N/A	GND	G32		
N/A	GND	C32		
N/A	GND	AH31		
N/A	GND	AD31		
N/A	GND	T31		
N/A	GND	M31		
N/A	GND	Y30		
N/A	GND	AU28		
N/A	GND	AN28		
N/A	GND	G28		
N/A	GND	C28		
N/A	GND	AT24		
N/A	GND	AN24		
N/A	GND	AJ24		
N/A	GND	AC24		
N/A	GND	AB24		
N/A	GND	AA24		
N/A	GND	Y24		
N/A	GND	W24		
N/A	GND	V24		
N/A	GND	U24		
N/A	GND	L24		
N/A	GND	G24		
N/A	GND	D24		
N/A	GND	AD23		
N/A	GND	AC23		
N/A	GND	AB23		
N/A	GND	AA23		
N/A	GND	Y23		
N/A	GND	W23		
N/A	GND	V23		
N/A	GND	U23		
N/A	GND	T23		
N/A	GND	AD22		
N/A	GND	AU39		

Table 12: **FF1517 — XC2VP50 and XC2VP70**

Bank	Pin Description	Pin Number	No Connects	
			XC2VP50	XC2VP70
N/A	GND	AM39		
N/A	GND	AH39		
N/A	GND	AD39		
N/A	GND	T39		
N/A	GND	M39		
N/A	GND	H39		
N/A	GND	C39		
N/A	GND	AV38		
N/A	GND	AU38		
N/A	GND	AA38		
N/A	GND	W38		
N/A	GND	C38		

Notes:
1. See Table 4 for an explanation of the signals available on this pin.

FF1517 Flip-Chip Fine-Pitch BGA Package Specifications (1.00mm pitch)

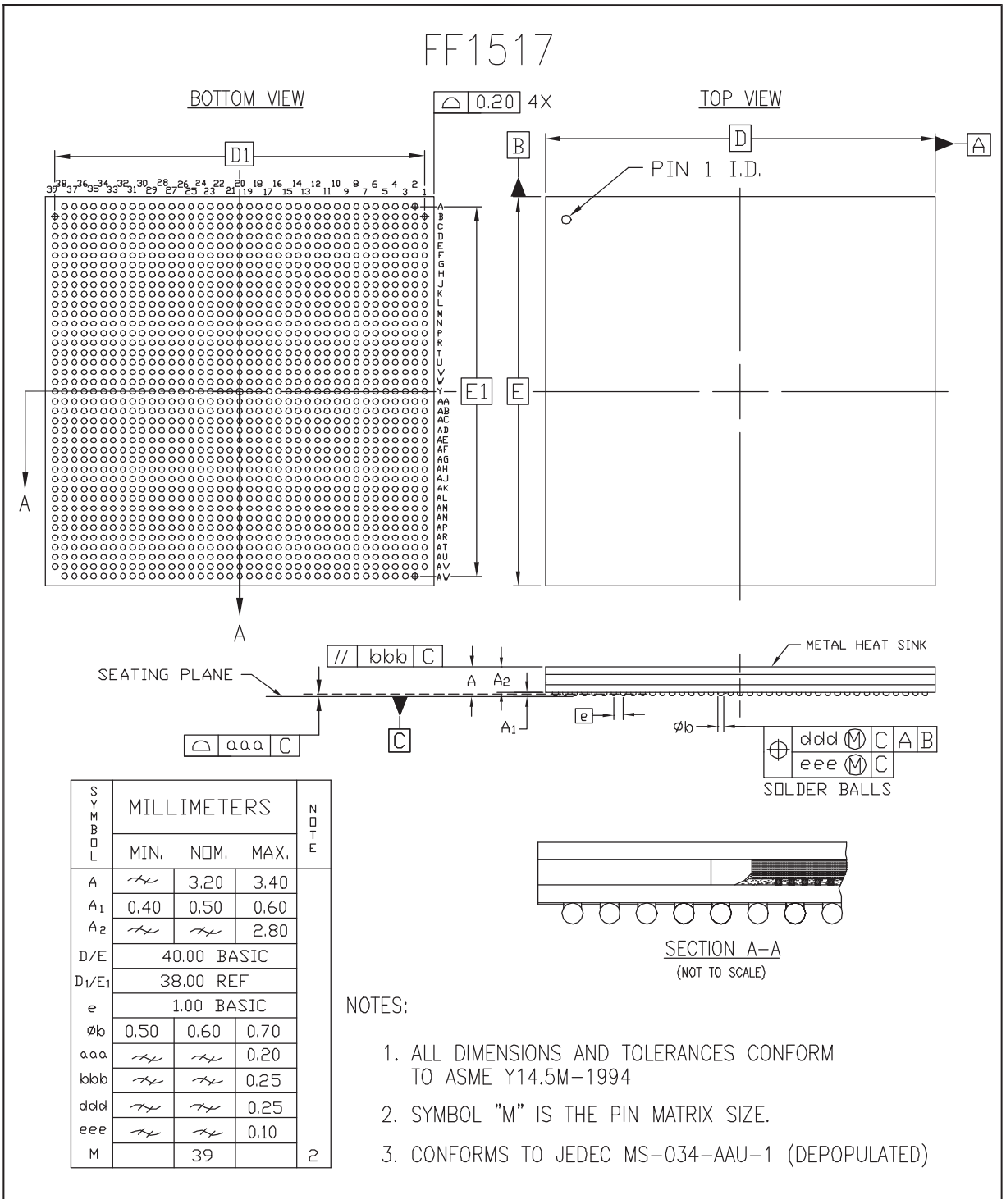

SYMBOL	MILLIMETERS			NOTE
	MIN.	NOM.	MAX.	
A		3.20	3.40	
A_1	0.40	0.50	0.60	
A_2			2.80	
D/E	40.00 BASIC			
D_1/E_1	38.00 REF			
e	1.00 BASIC			
øb	0.50	0.60	0.70	
aaa			0.20	
bbb			0.25	
ddd			0.25	
eee			0.10	
M		39		2

NOTES:

1. ALL DIMENSIONS AND TOLERANCES CONFORM TO ASME Y14.5M–1994
2. SYMBOL "M" IS THE PIN MATRIX SIZE.
3. CONFORMS TO JEDEC MS–034–AAU–1 (DEPOPULATED)

Figure 8: **FF1517 Flip-Chip Fine-Pitch BGA Package Specifications**

FF1704 Flip-Chip Fine-Pitch BGA Package

As shown in Table 13, XC2VP70 and XC2VP100 Virtex-II Pro devices are available in the FF1704 flip-chip fine-pitch BGA package. Following this table are the FF1704 Flip-Chip Fine-Pitch BGA Package Specifications (1.00mm pitch).

Table 13: **FF1704 — XC2VP70, XC2VPX70, and XC2VP100**

Bank	Pin Description		Pin Number	No Connects	
	Virtex-II Pro Devices	XC2VPX70 (if Different)		XC2VP70, XC2VPX70	XC2VP100
0	IO_L01N_0/VRP_0		G34		
0	IO_L01P_0/VRN_0		H34		
0	IO_L02N_0		F34		
0	IO_L02P_0		E34		
0	IO_L03N_0		C34		
0	IO_L03P_0/VREF_0		D34		
0	IO_L05_0/No_Pair		K32		
0	IO_L06N_0		H33		
0	IO_L06P_0		J33		
0	IO_L07N_0		F33		
0	IO_L07P_0		G33		
0	IO_L08N_0		E33		
0	IO_L08P_0		D33		
0	IO_L09N_0		H32		
0	IO_L09P_0/VREF_0		J32		
0	IO_L19N_0		E32		
0	IO_L19P_0		F32		
0	IO_L20N_0		C33		
0	IO_L20P_0		C32		
0	IO_L21N_0		K31		
0	IO_L21P_0		L31		
0	IO_L25N_0		H31		
0	IO_L25P_0		J31		
0	IO_L26N_0		G31		
0	IO_L26P_0		F31		
0	IO_L27N_0		D31		
0	IO_L27P_0/VREF_0		E31		
0	IO_L28N_0		L30		
0	IO_L28P_0		M30		
0	IO_L29N_0		J30		
0	IO_L29P_0		K30		
0	IO_L30N_0		G30		
0	IO_L30P_0		H30		

Table 13: **FF1704 — XC2VP70, XC2VPX70, and XC2VP100**

Bank	Pin Description		Pin Number	No Connects	
	Virtex-II Pro Devices	XC2VPX70 (if Different)		XC2VP70, XC2VPX70	XC2VP100
0	IO_L34N_0		E30		
0	IO_L34P_0		F30		
0	IO_L35N_0		D30		
0	IO_L35P_0		C30		
0	IO_L36N_0		M28		
0	IO_L36P_0/VREF_0		M29		
0	IO_L78N_0		K29	NC	
0	IO_L78P_0		L29	NC	
0	IO_L83_0/No_Pair		H29	NC	
0	IO_L84N_0		F29	NC	
0	IO_L84P_0		G29	NC	
0	IO_L85N_0		D29	NC	
0	IO_L85P_0		E29	NC	
0	IO_L86N_0		L28	NC	
0	IO_L86P_0		K28	NC	
0	IO_L87N_0		H28	NC	
0	IO_L87P_0/VREF_0		J28	NC	
0	IO_L37N_0		E28		
0	IO_L37P_0		F28		
0	IO_L38N_0		C29		
0	IO_L38P_0		C28		
0	IO_L39N_0		L27		
0	IO_L39P_0		M27		
0	IO_L43N_0		J27		
0	IO_L43P_0		K27		
0	IO_L44N_0		H27		
0	IO_L44P_0		G27		
0	IO_L45N_0		E27		
0	IO_L45P_0/VREF_0		F27		
0	IO_L46N_0		M25		
0	IO_L46P_0		M26		
0	IO_L47N_0		L26		
0	IO_L47P_0		K26		
0	IO_L48N_0		H26		
0	IO_L48P_0		J26		
0	IO_L49N_0		F26		

Table 13: **FF1704 — XC2VP70, XC2VPX70, and XC2VP100**

Bank	Pin Description		Pin Number	No Connects	
	Virtex-II Pro Devices	XC2VPX70 (if Different)		XC2VP70, XC2VPX70	XC2VP100
0	IO_L49P_0		G26		
0	IO_L50_0/No_Pair		D27		
0	IO_L53_0/No_Pair		D26		
0	IO_L54N_0		K25		
0	IO_L54P_0		L25		
0	IO_L55N_0		G25		
0	IO_L55P_0		H25		
0	IO_L56N_0		E26		
0	IO_L56P_0		E25		
0	IO_L57N_0		C25		
0	IO_L57P_0/VREF_0		C26		
0	IO_L58N_0		L24		
0	IO_L58P_0		M24		
0	IO_L59N_0		J24		
0	IO_L59P_0		K24		
0	IO_L60N_0		G24		
0	IO_L60P_0		H24		
0	IO_L64N_0		E24		
0	IO_L64P_0		F24		
0	IO_L65N_0		D24		
0	IO_L65P_0		C24		
0	IO_L66N_0		M22		
0	IO_L66P_0/VREF_0		M23		
0	IO_L67N_0		K23		
0	IO_L67P_0		L23		
0	IO_L68N_0		J23		
0	IO_L68P_0		H23		
0	IO_L69N_0		E23		
0	IO_L69P_0/VREF_0		F23		
0	IO_L73N_0		C23		
0	IO_L73P_0		D23		
0	IO_L74N_0/GCLK7P		K22		
0	IO_L74P_0/GCLK6S		J22		
0	IO_L75N_0/GCLK5P	BREFCLKN	F22		
0	IO_L75P_0/GCLK4S	BREFCLKP	G22		

Table 13: **FF1704 — XC2VP70, XC2VPX70, and XC2VP100**

Bank	Pin Description		Pin Number	No Connects	
	Virtex-II Pro Devices	XC2VPX70 (if Different)		XC2VP70, XC2VPX70	XC2VP100
1	IO_L75N_1/GCLK3P		G21		
1	IO_L75P_1/GCLK2S		F21		
1	IO_L74N_1/GCLK1P		J21		
1	IO_L74P_1/GCLK0S		K21		
1	IO_L73N_1		D20		
1	IO_L73P_1		C20		
1	IO_L69N_1/VREF_1		F20		
1	IO_L69P_1		E20		
1	IO_L68N_1		H20		
1	IO_L68P_1		J20		
1	IO_L67N_1		L20		
1	IO_L67P_1		K20		
1	IO_L66N_1/VREF_1		M20		
1	IO_L66P_1		M21		
1	IO_L65N_1		C19		
1	IO_L65P_1		D19		
1	IO_L64N_1		F19		
1	IO_L64P_1		E19		
1	IO_L60N_1		H19		
1	IO_L60P_1		G19		
1	IO_L59N_1		K19		
1	IO_L59P_1		J19		
1	IO_L58N_1		M19		
1	IO_L58P_1		L19		
1	IO_L57N_1/VREF_1		C17		
1	IO_L57P_1		C18		
1	IO_L56N_1		E18		
1	IO_L56P_1		E17		
1	IO_L55N_1		H18		
1	IO_L55P_1		G18		
1	IO_L54N_1		L18		
1	IO_L54P_1		K18		
1	IO_L53_1/No_Pair		D17		
1	IO_L50_1/No_Pair		D16		
1	IO_L49N_1		G17		
1	IO_L49P_1		F17		

Table 13: **FF1704 — XC2VP70, XC2VPX70, and XC2VP100**

Bank	Pin Description		Pin Number	No Connects	
	Virtex-II Pro Devices	XC2VPX70 (if Different)		XC2VP70, XC2VPX70	XC2VP100
1	IO_L48N_1		J17		
1	IO_L48P_1		H17		
1	IO_L47N_1		K17		
1	IO_L47P_1		L17		
1	IO_L46N_1		M17		
1	IO_L46P_1		M18		
1	IO_L45N_1/VREF_1		F16		
1	IO_L45P_1		E16		
1	IO_L44N_1		G16		
1	IO_L44P_1		H16		
1	IO_L43N_1		K16		
1	IO_L43P_1		J16		
1	IO_L39N_1		M16		
1	IO_L39P_1		L16		
1	IO_L38N_1		C15		
1	IO_L38P_1		C14		
1	IO_L37N_1		F15		
1	IO_L37P_1		E15		
1	IO_L87N_1/VREF_1		J15	NC	
1	IO_L87P_1		H15	NC	
1	IO_L86N_1		K15	NC	
1	IO_L86P_1		L15	NC	
1	IO_L85N_1		E14	NC	
1	IO_L85P_1		D14	NC	
1	IO_L84N_1		G14	NC	
1	IO_L84P_1		F14	NC	
1	IO_L83_1/No_Pair		H14	NC	
1	IO_L78N_1		L14	NC	
1	IO_L78P_1		K14	NC	
1	IO_L36N_1/VREF_1		M14		
1	IO_L36P_1		M15		
1	IO_L35N_1		C13		
1	IO_L35P_1		D13		
1	IO_L34N_1		F13		
1	IO_L34P_1		E13		
1	IO_L30N_1		H13		

Table 13: **FF1704 — XC2VP70, XC2VPX70, and XC2VP100**

Bank	Pin Description		Pin Number	No Connects	
	Virtex-II Pro Devices	XC2VPX70 (if Different)		XC2VP70, XC2VPX70	XC2VP100
1	IO_L30P_1		G13		
1	IO_L29N_1		K13		
1	IO_L29P_1		J13		
1	IO_L28N_1		M13		
1	IO_L28P_1		L13		
1	IO_L27N_1/VREF_1		E12		
1	IO_L27P_1		D12		
1	IO_L26N_1		F12		
1	IO_L26P_1		G12		
1	IO_L25N_1		J12		
1	IO_L25P_1		H12		
1	IO_L21N_1		L12		
1	IO_L21P_1		K12		
1	IO_L20N_1		C11		
1	IO_L20P_1		C10		
1	IO_L19N_1		F11		
1	IO_L19P_1		E11		
1	IO_L09N_1/VREF_1		J11		
1	IO_L09P_1		H11		
1	IO_L08N_1		D10		
1	IO_L08P_1		E10		
1	IO_L07N_1		G10		
1	IO_L07P_1		F10		
1	IO_L06N_1		J10		
1	IO_L06P_1		H10		
1	IO_L05_1/No_Pair		K11		
1	IO_L03N_1/VREF_1		D9		
1	IO_L03P_1		C9		
1	IO_L02N_1		E9		
1	IO_L02P_1		F9		
1	IO_L01N_1/VRP_1		H9		
1	IO_L01P_1/VRN_1		G9		
2	IO_L01N_2/VRP_2		C5		
2	IO_L01P_2/VRN_2		C6		
2	IO_L02N_2		E7		

Table 13: **FF1704 — XC2VP70, XC2VPX70, and XC2VP100**

Bank	Pin Description		Pin Number	No Connects	
	Virtex-II Pro Devices	XC2VPX70 (if Different)		XC2VP70, XC2VPX70	XC2VP100
2	IO_L02P_2		D7		
2	IO_L03N_2		E6		
2	IO_L03P_2		D6		
2	IO_L04N_2/VREF_2		G6		
2	IO_L04P_2		F7		
2	IO_L05N_2		D3		
2	IO_L05P_2		E3		
2	IO_L06N_2		D1		
2	IO_L06P_2		D2		
2	IO_L73N_2		E1		
2	IO_L73P_2		E2		
2	IO_L74N_2		F4		
2	IO_L74P_2		F3		
2	IO_L75N_2		F1		
2	IO_L75P_2		F2		
2	IO_L76N_2/VREF_2		G3		
2	IO_L76P_2		G4		
2	IO_L77N_2		G2		
2	IO_L77P_2		G1		
2	IO_L78N_2		G5		
2	IO_L78P_2		H6		
2	IO_L79N_2		H4		
2	IO_L79P_2		H5		
2	IO_L80N_2		H3		
2	IO_L80P_2		H2		
2	IO_L81N_2		H7		
2	IO_L81P_2		J8		
2	IO_L82N_2/VREF_2		J6		
2	IO_L82P_2		J7		
2	IO_L83N_2		J5		
2	IO_L83P_2		J4		
2	IO_L84N_2		J1		
2	IO_L84P_2		J2		
2	IO_L07N_2		K9		
2	IO_L07P_2		L10		
2	IO_L08N_2		K6		

Table 13: **FF1704 — XC2VP70, XC2VPX70, and XC2VP100**

Bank	Pin Description		Pin Number	No Connects	
	Virtex-II Pro Devices	XC2VPX70 (if Different)		XC2VP70, XC2VPX70	XC2VP100
2	IO_L08P_2		K5		
2	IO_L09N_2		K8		
2	IO_L09P_2		K7		
2	IO_L10N_2/VREF_2		K2		
2	IO_L10P_2		K1		
2	IO_L11N_2		L8		
2	IO_L11P_2		L9		
2	IO_L12N_2		L6		
2	IO_L12P_2		L7		
2	IO_L13N_2		K3		
2	IO_L13P_2		L3		
2	IO_L14N_2		L5		
2	IO_L14P_2		L4		
2	IO_L15N_2		L1		
2	IO_L15P_2		L2		
2	IO_L16N_2/VREF_2		M7		
2	IO_L16P_2		M8		
2	IO_L17N_2		M11		
2	IO_L17P_2		M12		
2	IO_L18N_2		M9		
2	IO_L18P_2		M10		
2	IO_L19N_2		M2		
2	IO_L19P_2		M3		
2	IO_L20N_2		M4		
2	IO_L20P_2		M5		
2	IO_L21N_2		N7		
2	IO_L21P_2		N8		
2	IO_L22N_2/VREF_2		N5		
2	IO_L22P_2		N6		
2	IO_L23N_2		N9		
2	IO_L23P_2		N10		
2	IO_L24N_2		N3		
2	IO_L24P_2		N4		
2	IO_L25N_2		N1		
2	IO_L25P_2		N2		
2	IO_L26N_2		N11		

Table 13: **FF1704 — XC2VP70, XC2VPX70, and XC2VP100**

Bank	Pin Description		Pin Number	No Connects	
	Virtex-II Pro Devices	XC2VPX70 (if Different)		XC2VP70, XC2VPX70	XC2VP100
2	IO_L26P_2		N12		
2	IO_L27N_2		P9		
2	IO_L27P_2		P10		
2	IO_L28N_2/VREF_2		P7		
2	IO_L28P_2		P8		
2	IO_L29N_2		P11		
2	IO_L29P_2		P12		
2	IO_L30N_2		P5		
2	IO_L30P_2		P6		
2	IO_L31N_2		P1		
2	IO_L31P_2		P2		
2	IO_L32N_2		R9		
2	IO_L32P_2		R10		
2	IO_L33N_2		R5		
2	IO_L33P_2		R6		
2	IO_L34N_2/VREF_2		P3		
2	IO_L34P_2		R3		
2	IO_L35N_2		R1		
2	IO_L35P_2		R2		
2	IO_L36N_2		R11		
2	IO_L36P_2		R12		
2	IO_L37N_2		T6		
2	IO_L37P_2		T7		
2	IO_L38N_2		T8		
2	IO_L38P_2		R8		
2	IO_L39N_2		T4		
2	IO_L39P_2		T5		
2	IO_L40N_2/VREF_2		T2		
2	IO_L40P_2		T3		
2	IO_L41N_2		T10		
2	IO_L41P_2		T11		
2	IO_L42N_2		U7		
2	IO_L42P_2		U8		
2	IO_L43N_2		U5		
2	IO_L43P_2		U6		
2	IO_L44N_2		U9		

Table 13: **FF1704 — XC2VP70, XC2VPX70, and XC2VP100**

Bank	Pin Description		Pin Number	No Connects	
	Virtex-II Pro Devices	XC2VPX70 (if Different)		XC2VP70, XC2VPX70	XC2VP100
2	IO_L44P_2		U10		
2	IO_L45N_2		U3		
2	IO_L45P_2		U4		
2	IO_L46N_2/VREF_2		U1		
2	IO_L46P_2		U2		
2	IO_L47N_2		T12		
2	IO_L47P_2		U12		
2	IO_L48N_2		V10		
2	IO_L48P_2		V11		
2	IO_L49N_2		V7		
2	IO_L49P_2		V8		
2	IO_L50N_2		U11		
2	IO_L50P_2		V12		
2	IO_L51N_2		V4		
2	IO_L51P_2		V5		
2	IO_L52N_2/VREF_2		V1		
2	IO_L52P_2		V2		
2	IO_L53N_2		W9		
2	IO_L53P_2		W10		
2	IO_L54N_2		W7		
2	IO_L54P_2		W8		
2	IO_L55N_2		W5		
2	IO_L55P_2		W6		
2	IO_L56N_2		W11		
2	IO_L56P_2		W12		
2	IO_L57N_2		W3		
2	IO_L57P_2		W4		
2	IO_L58N_2/VREF_2		W1		
2	IO_L58P_2		W2		
2	IO_L59N_2		Y9		
2	IO_L59P_2		Y10		
2	IO_L60N_2		Y6		
2	IO_L60P_2		Y7		
2	IO_L85N_2		Y3		
2	IO_L85P_2		Y4		
2	IO_L86N_2		Y11		

Table 13: **FF1704 — XC2VP70, XC2VPX70, and XC2VP100**

Bank	Pin Description		Pin Number	No Connects	
	Virtex-II Pro Devices	XC2VPX70 (if Different)		XC2VP70, XC2VPX70	XC2VP100
2	IO_L86P_2		Y12		
2	IO_L87N_2		AA9		
2	IO_L87P_2		AA10		
2	IO_L88N_2/VREF_2		AA6		
2	IO_L88P_2		AA7		
2	IO_L89N_2		AA12		
2	IO_L89P_2		AB12		
2	IO_L90N_2		AA3		
2	IO_L90P_2		AA4		
3	IO_L90N_3		AB3		
3	IO_L90P_3		AB4		
3	IO_L89N_3		AB6		
3	IO_L89P_3		AB7		
3	IO_L88N_3		AB9		
3	IO_L88P_3		AB10		
3	IO_L87N_3/VREF_3		AC3		
3	IO_L87P_3		AC4		
3	IO_L86N_3		AC11		
3	IO_L86P_3		AC12		
3	IO_L85N_3		AC6		
3	IO_L85P_3		AC7		
3	IO_L60N_3		AC9		
3	IO_L60P_3		AC10		
3	IO_L59N_3		AD9		
3	IO_L59P_3		AD10		
3	IO_L58N_3		AD1		
3	IO_L58P_3		AD2		
3	IO_L57N_3/VREF_3		AD3		
3	IO_L57P_3		AD4		
3	IO_L56N_3		AD11		
3	IO_L56P_3		AD12		
3	IO_L55N_3		AD5		
3	IO_L55P_3		AD6		
3	IO_L54N_3		AD7		
3	IO_L54P_3		AD8		

Table 13: **FF1704 — XC2VP70, XC2VPX70, and XC2VP100**

Bank	Pin Description		Pin Number	No Connects	
	Virtex-II Pro Devices	XC2VPX70 (if Different)		XC2VP70, XC2VPX70	XC2VP100
3	IO_L53N_3		AE10		
3	IO_L53P_3		AE11		
3	IO_L52N_3		AE1		
3	IO_L52P_3		AE2		
3	IO_L51N_3/VREF_3		AE4		
3	IO_L51P_3		AE5		
3	IO_L50N_3		AF11		
3	IO_L50P_3		AE12		
3	IO_L49N_3		AE7		
3	IO_L49P_3		AE8		
3	IO_L48N_3		AF1		
3	IO_L48P_3		AF2		
3	IO_L47N_3		AG12		
3	IO_L47P_3		AF12		
3	IO_L46N_3		AF3		
3	IO_L46P_3		AF4		
3	IO_L45N_3/VREF_3		AF5		
3	IO_L45P_3		AF6		
3	IO_L44N_3		AF7		
3	IO_L44P_3		AF8		
3	IO_L43N_3		AF9		
3	IO_L43P_3		AF10		
3	IO_L42N_3		AG2		
3	IO_L42P_3		AG3		
3	IO_L41N_3		AG10		
3	IO_L41P_3		AG11		
3	IO_L40N_3		AG4		
3	IO_L40P_3		AG5		
3	IO_L39N_3/VREF_3		AG6		
3	IO_L39P_3		AG7		
3	IO_L38N_3		AG8		
3	IO_L38P_3		AH8		
3	IO_L37N_3		AH1		
3	IO_L37P_3		AH2		
3	IO_L36N_3		AH3		
3	IO_L36P_3		AJ3		

Table 13: **FF1704 — XC2VP70, XC2VPX70, and XC2VP100**

Bank	Pin Description		Pin Number	No Connects	
	Virtex-II Pro Devices	XC2VPX70 (if Different)		XC2VP70, XC2VPX70	XC2VP100
3	IO_L35N_3		AH11		
3	IO_L35P_3		AH12		
3	IO_L34N_3		AH5		
3	IO_L34P_3		AH6		
3	IO_L33N_3/VREF_3		AH9		
3	IO_L33P_3		AH10		
3	IO_L32N_3		AJ11		
3	IO_L32P_3		AJ12		
3	IO_L31N_3		AJ1		
3	IO_L31P_3		AJ2		
3	IO_L30N_3		AJ5		
3	IO_L30P_3		AJ6		
3	IO_L29N_3		AJ9		
3	IO_L29P_3		AJ10		
3	IO_L28N_3		AJ7		
3	IO_L28P_3		AJ8		
3	IO_L27N_3/VREF_3		AK1		
3	IO_L27P_3		AK2		
3	IO_L26N_3		AK11		
3	IO_L26P_3		AK12		
3	IO_L25N_3		AK3		
3	IO_L25P_3		AK4		
3	IO_L24N_3		AK5		
3	IO_L24P_3		AK6		
3	IO_L23N_3		AK9		
3	IO_L23P_3		AK10		
3	IO_L22N_3		AK7		
3	IO_L22P_3		AK8		
3	IO_L21N_3/VREF_3		AL2		
3	IO_L21P_3		AL3		
3	IO_L20N_3		AL11		
3	IO_L20P_3		AL12		
3	IO_L19N_3		AL4		
3	IO_L19P_3		AL5		
3	IO_L18N_3		AL7		
3	IO_L18P_3		AL8		

Table 13: **FF1704 — XC2VP70, XC2VPX70, and XC2VP100**

Bank	Pin Description		Pin Number	No Connects	
	Virtex-II Pro Devices	XC2VPX70 (if Different)		XC2VP70, XC2VPX70	XC2VP100
3	IO_L17N_3		AL9		
3	IO_L17P_3		AL10		
3	IO_L16N_3		AM1		
3	IO_L16P_3		AM2		
3	IO_L15N_3/VREF_3		AM3		
3	IO_L15P_3		AN3		
3	IO_L14N_3		AM8		
3	IO_L14P_3		AM9		
3	IO_L13N_3		AM4		
3	IO_L13P_3		AM5		
3	IO_L12N_3		AM6		
3	IO_L12P_3		AM7		
3	IO_L11N_3		AN9		
3	IO_L11P_3		AM10		
3	IO_L10N_3		AN1		
3	IO_L10P_3		AN2		
3	IO_L09N_3/VREF_3		AN5		
3	IO_L09P_3		AN6		
3	IO_L08N_3		AN7		
3	IO_L08P_3		AN8		
3	IO_L07N_3		AP1		
3	IO_L07P_3		AP2		
3	IO_L84N_3		AP4		
3	IO_L84P_3		AP5		
3	IO_L83N_3		AR7		
3	IO_L83P_3		AP8		
3	IO_L82N_3		AP6		
3	IO_L82P_3		AP7		
3	IO_L81N_3/VREF_3		AR2		
3	IO_L81P_3		AR3		
3	IO_L80N_3		AT5		
3	IO_L80P_3		AR6		
3	IO_L79N_3		AR4		
3	IO_L79P_3		AR5		
3	IO_L78N_3		AT1		
3	IO_L78P_3		AT2		

Table 13: **FF1704 — XC2VP70, XC2VPX70, and XC2VP100**

Bank	Pin Description		Pin Number	No Connects	
	Virtex-II Pro Devices	XC2VPX70 (if Different)		XC2VP70, XC2VPX70	XC2VP100
3	IO_L77N_3		AT3		
3	IO_L77P_3		AT4		
3	IO_L76N_3		AU1		
3	IO_L76P_3		AU2		
3	IO_L75N_3/VREF_3		AU3		
3	IO_L75P_3		AU4		
3	IO_L74N_3		AV3		
3	IO_L74P_3		AW3		
3	IO_L73N_3		AV1		
3	IO_L73P_3		AV2		
3	IO_L06N_3		AW1		
3	IO_L06P_3		AW2		
3	IO_L05N_3		AT8		
3	IO_L05P_3		AU8		
3	IO_L04N_3		AT6		
3	IO_L04P_3		AU7		
3	IO_L03N_3/VREF_3		AY5		
3	IO_L03P_3		AY6		
3	IO_L02N_3		AV7		
3	IO_L02P_3		AW7		
3	IO_L01N_3/VRP_3		AV6		
3	IO_L01P_3/VRN_3		AW6		
4	IO_L01N_4/BUSY/DOUT(1)		AT9		
4	IO_L01P_4/INIT_B		AR9		
4	IO_L02N_4/D0/DIN(1)		AU9		
4	IO_L02P_4/D1		AV9		
4	IO_L03N_4/D2		AY9		
4	IO_L03P_4/D3		AW9		
4	IO_L05_4/No_Pair		AN11		
4	IO_L06N_4/VRP_4		AR10		
4	IO_L06P_4/VRN_4		AP10		
4	IO_L07N_4		AU10		
4	IO_L07P_4/VREF_4		AT10		
4	IO_L08N_4		AV10		
4	IO_L08P_4		AW10		

Table 13: **FF1704 — XC2VP70, XC2VPX70, and XC2VP100**

Bank	Pin Description		Pin Number	No Connects	
	Virtex-II Pro Devices	XC2VPX70 (if Different)		XC2VP70, XC2VPX70	XC2VP100
4	IO_L09N_4		AR11		
4	IO_L09P_4/VREF_4		AP11		
4	IO_L19N_4		AV11		
4	IO_L19P_4		AU11		
4	IO_L20N_4		AY10		
4	IO_L20P_4		AY11		
4	IO_L21N_4		AN12		
4	IO_L21P_4		AM12		
4	IO_L25N_4		AR12		
4	IO_L25P_4		AP12		
4	IO_L26N_4		AT12		
4	IO_L26P_4		AU12		
4	IO_L27N_4		AW12		
4	IO_L27P_4/VREF_4		AV12		
4	IO_L28N_4		AM13		
4	IO_L28P_4		AL13		
4	IO_L29N_4		AP13		
4	IO_L29P_4		AN13		
4	IO_L30N_4		AT13		
4	IO_L30P_4		AR13		
4	IO_L34N_4		AV13		
4	IO_L34P_4		AU13		
4	IO_L35N_4		AW13		
4	IO_L35P_4		AY13		
4	IO_L36N_4		AL15		
4	IO_L36P_4/VREF_4		AL14		
4	IO_L78N_4		AN14	NC	
4	IO_L78P_4		AM14	NC	
4	IO_L83_4/No_Pair		AR14	NC	
4	IO_L84N_4		AU14	NC	
4	IO_L84P_4		AT14	NC	
4	IO_L85N_4		AW14	NC	
4	IO_L85P_4		AV14	NC	
4	IO_L86N_4		AM15	NC	
4	IO_L86P_4		AN15	NC	
4	IO_L87N_4		AR15	NC	

Table 13: **FF1704 — XC2VP70, XC2VPX70, and XC2VP100**

Bank	Pin Description		Pin Number	No Connects	
	Virtex-II Pro Devices	XC2VPX70 (if Different)		XC2VP70, XC2VPX70	XC2VP100
4	IO_L87P_4/VREF_4		AP15	NC	
4	IO_L37N_4		AV15		
4	IO_L37P_4		AU15		
4	IO_L38N_4		AY14		
4	IO_L38P_4		AY15		
4	IO_L39N_4		AM16		
4	IO_L39P_4		AL16		
4	IO_L43N_4		AP16		
4	IO_L43P_4		AN16		
4	IO_L44N_4		AR16		
4	IO_L44P_4		AT16		
4	IO_L45N_4		AV16		
4	IO_L45P_4/VREF_4		AU16		
4	IO_L46N_4		AL18		
4	IO_L46P_4		AL17		
4	IO_L47N_4		AM17		
4	IO_L47P_4		AN17		
4	IO_L48N_4		AR17		
4	IO_L48P_4		AP17		
4	IO_L49N_4		AU17		
4	IO_L49P_4		AT17		
4	IO_L50_4/No_Pair		AW16		
4	IO_L53_4/No_Pair		AW17		
4	IO_L54N_4		AN18		
4	IO_L54P_4		AM18		
4	IO_L55N_4		AT18		
4	IO_L55P_4		AR18		
4	IO_L56N_4		AV17		
4	IO_L56P_4		AV18		
4	IO_L57N_4		AY18		
4	IO_L57P_4/VREF_4		AY17		
4	IO_L58N_4		AM19		
4	IO_L58P_4		AL19		
4	IO_L59N_4		AP19		
4	IO_L59P_4		AN19		
4	IO_L60N_4		AT19		

Table 13: **FF1704 — XC2VP70, XC2VPX70, and XC2VP100**

Bank	Pin Description		Pin Number	No Connects	
	Virtex-II Pro Devices	XC2VPX70 (if Different)		XC2VP70, XC2VPX70	XC2VP100
4	IO_L60P_4		AR19		
4	IO_L64N_4		AV19		
4	IO_L64P_4		AU19		
4	IO_L65N_4		AW19		
4	IO_L65P_4		AY19		
4	IO_L66N_4		AL21		
4	IO_L66P_4/VREF_4		AL20		
4	IO_L67N_4		AN20		
4	IO_L67P_4		AM20		
4	IO_L68N_4		AP20		
4	IO_L68P_4		AR20		
4	IO_L69N_4		AV20		
4	IO_L69P_4/VREF_4		AU20		
4	IO_L73N_4		AY20		
4	IO_L73P_4		AW20		
4	IO_L74N_4/GCLK3S		AN21		
4	IO_L74P_4/GCLK2P		AP21		
4	IO_L75N_4/GCLK1S		AU21		
4	IO_L75P_4/GCLK0P		AT21		
5	IO_L75N_5/GCLK7S	BREFCLKN	AT22		
5	IO_L75P_5/GCLK6P	BREFCLKP	AU22		
5	IO_L74N_5/GCLK5S		AP22		
5	IO_L74P_5/GCLK4P		AN22		
5	IO_L73N_5		AW23		
5	IO_L73P_5		AY23		
5	IO_L69N_5/VREF_5		AU23		
5	IO_L69P_5		AV23		
5	IO_L68N_5		AR23		
5	IO_L68P_5		AP23		
5	IO_L67N_5		AM23		
5	IO_L67P_5		AN23		
5	IO_L66N_5/VREF_5		AL23		
5	IO_L66P_5		AL22		
5	IO_L65N_5		AY24		
5	IO_L65P_5		AW24		

Table 13: **FF1704 — XC2VP70, XC2VPX70, and XC2VP100**

Bank	Pin Description		Pin Number	No Connects	
	Virtex-II Pro Devices	XC2VPX70 (if Different)		XC2VP70, XC2VPX70	XC2VP100
5	IO_L64N_5		AU24		
5	IO_L64P_5		AV24		
5	IO_L60N_5		AR24		
5	IO_L60P_5		AT24		
5	IO_L59N_5		AN24		
5	IO_L59P_5		AP24		
5	IO_L58N_5		AL24		
5	IO_L58P_5		AM24		
5	IO_L57N_5/VREF_5		AY26		
5	IO_L57P_5		AY25		
5	IO_L56N_5		AV25		
5	IO_L56P_5		AV26		
5	IO_L55N_5		AR25		
5	IO_L55P_5		AT25		
5	IO_L54N_5		AM25		
5	IO_L54P_5		AN25		
5	IO_L53_5/No_Pair		AW26		
5	IO_L50_5/No_Pair		AW27		
5	IO_L49N_5		AT26		
5	IO_L49P_5		AU26		
5	IO_L48N_5		AP26		
5	IO_L48P_5		AR26		
5	IO_L47N_5		AN26		
5	IO_L47P_5		AM26		
5	IO_L46N_5		AL26		
5	IO_L46P_5		AL25		
5	IO_L45N_5/VREF_5		AU27		
5	IO_L45P_5		AV27		
5	IO_L44N_5		AT27		
5	IO_L44P_5		AR27		
5	IO_L43N_5		AN27		
5	IO_L43P_5		AP27		
5	IO_L39N_5		AL27		
5	IO_L39P_5		AM27		
5	IO_L38N_5		AY28		
5	IO_L38P_5		AY29		

Table 13: **FF1704 — XC2VP70, XC2VPX70, and XC2VP100**

Bank	Pin Description		Pin Number	No Connects	
	Virtex-II Pro Devices	XC2VPX70 (if Different)		XC2VP70, XC2VPX70	XC2VP100
5	IO_L37N_5		AU28		
5	IO_L37P_5		AV28		
5	IO_L87N_5/VREF_5		AP28	NC	
5	IO_L87P_5		AR28	NC	
5	IO_L86N_5		AN28	NC	
5	IO_L86P_5		AM28	NC	
5	IO_L85N_5		AV29	NC	
5	IO_L85P_5		AW29	NC	
5	IO_L84N_5		AT29	NC	
5	IO_L84P_5		AU29	NC	
5	IO_L83_5/No_Pair		AR29	NC	
5	IO_L78N_5		AM29	NC	
5	IO_L78P_5		AN29	NC	
5	IO_L36N_5/VREF_5		AL29		
5	IO_L36P_5		AL28		
5	IO_L35N_5		AY30		
5	IO_L35P_5		AW30		
5	IO_L34N_5		AU30		
5	IO_L34P_5		AV30		
5	IO_L30N_5		AR30		
5	IO_L30P_5		AT30		
5	IO_L29N_5		AN30		
5	IO_L29P_5		AP30		
5	IO_L28N_5		AL30		
5	IO_L28P_5		AM30		
5	IO_L27N_5/VREF_5		AV31		
5	IO_L27P_5		AW31		
5	IO_L26N_5		AU31		
5	IO_L26P_5		AT31		
5	IO_L25N_5		AP31		
5	IO_L25P_5		AR31		
5	IO_L21N_5		AM31		
5	IO_L21P_5		AN31		
5	IO_L20N_5		AY32		
5	IO_L20P_5		AY33		
5	IO_L19N_5		AU32		

Table 13: **FF1704 — XC2VP70, XC2VPX70, and XC2VP100**

Bank	Pin Description		Pin Number	No Connects	
	Virtex-II Pro Devices	XC2VPX70 (if Different)		XC2VP70, XC2VPX70	XC2VP100
5	IO_L19P_5		AV32		
5	IO_L09N_5/VREF_5		AP32		
5	IO_L09P_5		AR32		
5	IO_L08N_5		AW33		
5	IO_L08P_5		AV33		
5	IO_L07N_5/VREF_5		AT33		
5	IO_L07P_5		AU33		
5	IO_L06N_5/VRP_5		AP33		
5	IO_L06P_5/VRN_5		AR33		
5	IO_L05_5/No_Pair		AN32		
5	IO_L03N_5/D4		AW34		
5	IO_L03P_5/D5		AY34		
5	IO_L02N_5/D6		AV34		
5	IO_L02P_5/D7		AU34		
5	IO_L01N_5/RDWR_B		AR34		
5	IO_L01P_5/CS_B		AT34		
6	IO_L01P_6/VRN_6		AW37		
6	IO_L01N_6/VRP_6		AV37		
6	IO_L02P_6		AW36		
6	IO_L02N_6		AV36		
6	IO_L03P_6		AY37		
6	IO_L03N_6/VREF_6		AY38		
6	IO_L04P_6		AU36		
6	IO_L04N_6		AT37		
6	IO_L05P_6		AU35		
6	IO_L05N_6		AT35		
6	IO_L06P_6		AW41		
6	IO_L06N_6		AW42		
6	IO_L73P_6		AV41		
6	IO_L73N_6		AV42		
6	IO_L74P_6		AW40		
6	IO_L74N_6		AV40		
6	IO_L75P_6		AU39		
6	IO_L75N_6/VREF_6		AU40		
6	IO_L76P_6		AU41		

Table 13: **FF1704 — XC2VP70, XC2VPX70, and XC2VP100**

Bank	Pin Description		Pin Number	No Connects	
	Virtex-II Pro Devices	XC2VPX70 (if Different)		XC2VP70, XC2VPX70	XC2VP100
6	IO_L76N_6		AU42		
6	IO_L77P_6		AT39		
6	IO_L77N_6		AT40		
6	IO_L78P_6		AT41		
6	IO_L78N_6		AT42		
6	IO_L79P_6		AR38		
6	IO_L79N_6		AR39		
6	IO_L80P_6		AR37		
6	IO_L80N_6		AT38		
6	IO_L81P_6		AR40		
6	IO_L81N_6/VREF_6		AR41		
6	IO_L82P_6		AP36		
6	IO_L82N_6		AP37		
6	IO_L83P_6		AP35		
6	IO_L83N_6		AR36		
6	IO_L84P_6		AP38		
6	IO_L84N_6		AP39		
6	IO_L07P_6		AP41		
6	IO_L07N_6		AP42		
6	IO_L08P_6		AN35		
6	IO_L08N_6		AN36		
6	IO_L09P_6		AN37		
6	IO_L09N_6/VREF_6		AN38		
6	IO_L10P_6		AN41		
6	IO_L10N_6		AN42		
6	IO_L11P_6		AM33		
6	IO_L11N_6		AN34		
6	IO_L12P_6		AM36		
6	IO_L12N_6		AM37		
6	IO_L13P_6		AM38		
6	IO_L13N_6		AM39		
6	IO_L14P_6		AM34		
6	IO_L14N_6		AM35		
6	IO_L15P_6		AN40		
6	IO_L15N_6/VREF_6		AM40		
6	IO_L16P_6		AM41		

Table 13: **FF1704 — XC2VP70, XC2VPX70, and XC2VP100**

Bank	Pin Description		Pin Number	No Connects	
	Virtex-II Pro Devices	XC2VPX70 (if Different)		XC2VP70, XC2VPX70	XC2VP100
6	IO_L16N_6		AM42		
6	IO_L17P_6		AL33		
6	IO_L17N_6		AL34		
6	IO_L18P_6		AL35		
6	IO_L18N_6		AL36		
6	IO_L19P_6		AL38		
6	IO_L19N_6		AL39		
6	IO_L20P_6		AL31		
6	IO_L20N_6		AL32		
6	IO_L21P_6		AL40		
6	IO_L21N_6/VREF_6		AL41		
6	IO_L22P_6		AK35		
6	IO_L22N_6		AK36		
6	IO_L23P_6		AK33		
6	IO_L23N_6		AK34		
6	IO_L24P_6		AK37		
6	IO_L24N_6		AK38		
6	IO_L25P_6		AK39		
6	IO_L25N_6		AK40		
6	IO_L26P_6		AK31		
6	IO_L26N_6		AK32		
6	IO_L27P_6		AK41		
6	IO_L27N_6/VREF_6		AK42		
6	IO_L28P_6		AJ35		
6	IO_L28N_6		AJ36		
6	IO_L29P_6		AJ33		
6	IO_L29N_6		AJ34		
6	IO_L30P_6		AJ37		
6	IO_L30N_6		AJ38		
6	IO_L31P_6		AJ41		
6	IO_L31N_6		AJ42		
6	IO_L32P_6		AJ31		
6	IO_L32N_6		AJ32		
6	IO_L33P_6		AH33		
6	IO_L33N_6/VREF_6		AH34		
6	IO_L34P_6		AH37		

Table 13: **FF1704 — XC2VP70, XC2VPX70, and XC2VP100**

Bank	Pin Description		Pin Number	No Connects	
	Virtex-II Pro Devices	XC2VPX70 (if Different)		XC2VP70, XC2VPX70	XC2VP100
6	IO_L34N_6		AH38		
6	IO_L35P_6		AH31		
6	IO_L35N_6		AH32		
6	IO_L36P_6		AJ40		
6	IO_L36N_6		AH40		
6	IO_L37P_6		AH41		
6	IO_L37N_6		AH42		
6	IO_L38P_6		AH35		
6	IO_L38N_6		AG35		
6	IO_L39P_6		AG36		
6	IO_L39N_6/VREF_6		AG37		
6	IO_L40P_6		AG38		
6	IO_L40N_6		AG39		
6	IO_L41P_6		AG32		
6	IO_L41N_6		AG33		
6	IO_L42P_6		AG40		
6	IO_L42N_6		AG41		
6	IO_L43P_6		AF33		
6	IO_L43N_6		AF34		
6	IO_L44P_6		AF35		
6	IO_L44N_6		AF36		
6	IO_L45P_6		AF37		
6	IO_L45N_6/VREF_6		AF38		
6	IO_L46P_6		AF39		
6	IO_L46N_6		AF40		
6	IO_L47P_6		AF31		
6	IO_L47N_6		AG31		
6	IO_L48P_6		AF41		
6	IO_L48N_6		AF42		
6	IO_L49P_6		AE35		
6	IO_L49N_6		AE36		
6	IO_L50P_6		AE31		
6	IO_L50N_6		AF32		
6	IO_L51P_6		AE38		
6	IO_L51N_6/VREF_6		AE39		
6	IO_L52P_6		AE41		

Table 13: **FF1704 — XC2VP70, XC2VPX70, and XC2VP100**

Bank	Pin Description		Pin Number	No Connects	
	Virtex-II Pro Devices	XC2VPX70 (if Different)		XC2VP70, XC2VPX70	XC2VP100
6	IO_L52N_6		AE42		
6	IO_L53P_6		AE32		
6	IO_L53N_6		AE33		
6	IO_L54P_6		AD35		
6	IO_L54N_6		AD36		
6	IO_L55P_6		AD37		
6	IO_L55N_6		AD38		
6	IO_L56P_6		AD31		
6	IO_L56N_6		AD32		
6	IO_L57P_6		AD39		
6	IO_L57N_6/VREF_6		AD40		
6	IO_L58P_6		AD41		
6	IO_L58N_6		AD42		
6	IO_L59P_6		AD33		
6	IO_L59N_6		AD34		
6	IO_L60P_6		AC33		
6	IO_L60N_6		AC34		
6	IO_L85P_6		AC36		
6	IO_L85N_6		AC37		
6	IO_L86P_6		AC31		
6	IO_L86N_6		AC32		
6	IO_L87P_6		AC39		
6	IO_L87N_6/VREF_6		AC40		
6	IO_L88P_6		AB33		
6	IO_L88N_6		AB34		
6	IO_L89P_6		AB36		
6	IO_L89N_6		AB37		
6	IO_L90P_6		AB39		
6	IO_L90N_6		AB40		
7	IO_L90P_7		AA39		
7	IO_L90N_7		AA40		
7	IO_L89P_7		AB31		
7	IO_L89N_7		AA31		
7	IO_L88P_7		AA36		
7	IO_L88N_7/VREF_7		AA37		

Table 13: **FF1704 — XC2VP70, XC2VPX70, and XC2VP100**

Bank	Pin Description		Pin Number	No Connects	
	Virtex-II Pro Devices	XC2VPX70 (if Different)		XC2VP70, XC2VPX70	XC2VP100
7	IO_L87P_7		AA33		
7	IO_L87N_7		AA34		
7	IO_L86P_7		Y31		
7	IO_L86N_7		Y32		
7	IO_L85P_7		Y39		
7	IO_L85N_7		Y40		
7	IO_L60P_7		Y36		
7	IO_L60N_7		Y37		
7	IO_L59P_7		Y33		
7	IO_L59N_7		Y34		
7	IO_L58P_7		W41		
7	IO_L58N_7/VREF_7		W42		
7	IO_L57P_7		W39		
7	IO_L57N_7		W40		
7	IO_L56P_7		W31		
7	IO_L56N_7		W32		
7	IO_L55P_7		W37		
7	IO_L55N_7		W38		
7	IO_L54P_7		W35		
7	IO_L54N_7		W36		
7	IO_L53P_7		W33		
7	IO_L53N_7		W34		
7	IO_L52P_7		V41		
7	IO_L52N_7/VREF_7		V42		
7	IO_L51P_7		V38		
7	IO_L51N_7		V39		
7	IO_L50P_7		V31		
7	IO_L50N_7		U32		
7	IO_L49P_7		V35		
7	IO_L49N_7		V36		
7	IO_L48P_7		V32		
7	IO_L48N_7		V33		
7	IO_L47P_7		U31		
7	IO_L47N_7		T31		
7	IO_L46P_7		U41		
7	IO_L46N_7/VREF_7		U42		

Table 13: **FF1704 — XC2VP70, XC2VPX70, and XC2VP100**

Bank	Pin Description		Pin Number	No Connects	
	Virtex-II Pro Devices	XC2VPX70 (if Different)		XC2VP70, XC2VPX70	XC2VP100
7	IO_L45P_7		U39		
7	IO_L45N_7		U40		
7	IO_L44P_7		U33		
7	IO_L44N_7		U34		
7	IO_L43P_7		U37		
7	IO_L43N_7		U38		
7	IO_L42P_7		U35		
7	IO_L42N_7		U36		
7	IO_L41P_7		T32		
7	IO_L41N_7		T33		
7	IO_L40P_7		T40		
7	IO_L40N_7/VREF_7		T41		
7	IO_L39P_7		T38		
7	IO_L39N_7		T39		
7	IO_L38P_7		R35		
7	IO_L38N_7		T35		
7	IO_L37P_7		T36		
7	IO_L37N_7		T37		
7	IO_L36P_7		R31		
7	IO_L36N_7		R32		
7	IO_L35P_7		R41		
7	IO_L35N_7		R42		
7	IO_L34P_7		R40		
7	IO_L34N_7/VREF_7		P40		
7	IO_L33P_7		R37		
7	IO_L33N_7		R38		
7	IO_L32P_7		R33		
7	IO_L32N_7		R34		
7	IO_L31P_7		P41		
7	IO_L31N_7		P42		
7	IO_L30P_7		P37		
7	IO_L30N_7		P38		
7	IO_L29P_7		P31		
7	IO_L29N_7		P32		
7	IO_L28P_7		P35		
7	IO_L28N_7/VREF_7		P36		

Table 13: **FF1704 — XC2VP70, XC2VPX70, and XC2VP100**

Bank	Pin Description		Pin Number	No Connects	
	Virtex-II Pro Devices	XC2VPX70 (if Different)		XC2VP70, XC2VPX70	XC2VP100
7	IO_L27P_7		P33		
7	IO_L27N_7		P34		
7	IO_L26P_7		N31		
7	IO_L26N_7		N32		
7	IO_L25P_7		N41		
7	IO_L25N_7		N42		
7	IO_L24P_7		N39		
7	IO_L24N_7		N40		
7	IO_L23P_7		N33		
7	IO_L23N_7		N34		
7	IO_L22P_7		N37		
7	IO_L22N_7/VREF_7		N38		
7	IO_L21P_7		N35		
7	IO_L21N_7		N36		
7	IO_L20P_7		M38		
7	IO_L20N_7		M39		
7	IO_L19P_7		M40		
7	IO_L19N_7		M41		
7	IO_L18P_7		M33		
7	IO_L18N_7		M34		
7	IO_L17P_7		M31		
7	IO_L17N_7		M32		
7	IO_L16P_7		M35		
7	IO_L16N_7/VREF_7		M36		
7	IO_L15P_7		L41		
7	IO_L15N_7		L42		
7	IO_L14P_7		L39		
7	IO_L14N_7		L38		
7	IO_L13P_7		L40		
7	IO_L13N_7		K40		
7	IO_L12P_7		L36		
7	IO_L12N_7		L37		
7	IO_L11P_7		L34		
7	IO_L11N_7		L35		
7	IO_L10P_7		K42		
7	IO_L10N_7/VREF_7		K41		

Table 13: **FF1704 — XC2VP70, XC2VPX70, and XC2VP100**

Bank	Pin Description		Pin Number	No Connects	
	Virtex-II Pro Devices	XC2VPX70 (if Different)		XC2VP70, XC2VPX70	XC2VP100
7	IO_L09P_7		K36		
7	IO_L09N_7		K35		
7	IO_L08P_7		K38		
7	IO_L08N_7		K37		
7	IO_L07P_7		L33		
7	IO_L07N_7		K34		
7	IO_L84P_7		J41		
7	IO_L84N_7		J42		
7	IO_L83P_7		J39		
7	IO_L83N_7		J38		
7	IO_L82P_7		J36		
7	IO_L82N_7/VREF_7		J37		
7	IO_L81P_7		J35		
7	IO_L81N_7		H36		
7	IO_L80P_7		H41		
7	IO_L80N_7		H40		
7	IO_L79P_7		H38		
7	IO_L79N_7		H39		
7	IO_L78P_7		H37		
7	IO_L78N_7		G38		
7	IO_L77P_7		G42		
7	IO_L77N_7		G41		
7	IO_L76P_7		G39		
7	IO_L76N_7/VREF_7		G40		
7	IO_L75P_7		F41		
7	IO_L75N_7		F42		
7	IO_L74P_7		F40		
7	IO_L74N_7		F39		
7	IO_L73P_7		E41		
7	IO_L73N_7		E42		
7	IO_L06P_7		D41		
7	IO_L06N_7		D42		
7	IO_L05P_7		E40		
7	IO_L05N_7		D40		
7	IO_L04P_7		F36		
7	IO_L04N_7/VREF_7		G37		

Table 13: **FF1704 — XC2VP70, XC2VPX70, and XC2VP100**

Bank	Pin Description		Pin Number	No Connects	
	Virtex-II Pro Devices	XC2VPX70 (if Different)		XC2VP70, XC2VPX70	XC2VP100
7	IO_L03P_7		D37		
7	IO_L03N_7		E37		
7	IO_L02P_7		D36		
7	IO_L02N_7		E36		
7	IO_L01P_7/VRN_7		C37		
7	IO_L01N_7/VRP_7		C38		
0	VCCO_0		D25		
0	VCCO_0		G23		
0	VCCO_0		G28		
0	VCCO_0		G32		
0	VCCO_0		J25		
0	VCCO_0		J29		
0	VCCO_0		P22		
0	VCCO_0		P23		
0	VCCO_0		P24		
0	VCCO_0		P25		
0	VCCO_0		P26		
0	VCCO_0		R22		
0	VCCO_0		R23		
0	VCCO_0		R24		
0	VCCO_0		R25		
1	VCCO_1		R21		
1	VCCO_1		R20		
1	VCCO_1		R19		
1	VCCO_1		R18		
1	VCCO_1		P21		
1	VCCO_1		P20		
1	VCCO_1		P19		
1	VCCO_1		P18		
1	VCCO_1		P17		
1	VCCO_1		J18		
1	VCCO_1		J14		
1	VCCO_1		G20		
1	VCCO_1		G15		
1	VCCO_1		G11		

Table 13: **FF1704 — XC2VP70, XC2VPX70, and XC2VP100**

Bank	Pin Description		Pin Number	No Connects	
	Virtex-II Pro Devices	XC2VPX70 (if Different)		XC2VP70, XC2VPX70	XC2VP100
1	VCCO_1		D18		
2	VCCO_2		AA15		
2	VCCO_2		AA14		
2	VCCO_2		Y15		
2	VCCO_2		Y14		
2	VCCO_2		Y8		
2	VCCO_2		Y5		
2	VCCO_2		W15		
2	VCCO_2		W14		
2	VCCO_2		V15		
2	VCCO_2		V14		
2	VCCO_2		V3		
2	VCCO_2		U15		
2	VCCO_2		U14		
2	VCCO_2		T15		
2	VCCO_2		T14		
2	VCCO_2		R14		
2	VCCO_2		T9		
2	VCCO_2		P4		
2	VCCO_2		M6		
2	VCCO_2		J3		
2	VCCO_2		F5		
3	VCCO_3		AU5		
3	VCCO_3		AP3		
3	VCCO_3		AL6		
3	VCCO_3		AJ4		
3	VCCO_3		AH14		
3	VCCO_3		AG15		
3	VCCO_3		AG14		
3	VCCO_3		AG9		
3	VCCO_3		AF15		
3	VCCO_3		AF14		
3	VCCO_3		AE15		
3	VCCO_3		AE14		
3	VCCO_3		AE3		
3	VCCO_3		AD15		

Table 13: **FF1704 — XC2VP70, XC2VPX70, and XC2VP100**

Bank	Pin Description		Pin Number	No Connects	
	Virtex-II Pro Devices	XC2VPX70 (if Different)		XC2VP70, XC2VPX70	XC2VP100
3	VCCO_3		AD14		
3	VCCO_3		AC15		
3	VCCO_3		AC14		
3	VCCO_3		AC8		
3	VCCO_3		AC5		
3	VCCO_3		AB15		
3	VCCO_3		AB14		
4	VCCO_4		AW18		
4	VCCO_4		AT20		
4	VCCO_4		AT15		
4	VCCO_4		AT11		
4	VCCO_4		AP18		
4	VCCO_4		AP14		
4	VCCO_4		AJ21		
4	VCCO_4		AJ20		
4	VCCO_4		AJ19		
4	VCCO_4		AJ18		
4	VCCO_4		AJ17		
4	VCCO_4		AH21		
4	VCCO_4		AH20		
4	VCCO_4		AH19		
4	VCCO_4		AH18		
5	VCCO_5		AW25		
5	VCCO_5		AT32		
5	VCCO_5		AT28		
5	VCCO_5		AT23		
5	VCCO_5		AP29		
5	VCCO_5		AP25		
5	VCCO_5		AJ26		
5	VCCO_5		AJ25		
5	VCCO_5		AJ24		
5	VCCO_5		AJ23		
5	VCCO_5		AJ22		
5	VCCO_5		AH25		
5	VCCO_5		AH24		
5	VCCO_5		AH23		

Table 13: **FF1704 — XC2VP70, XC2VPX70, and XC2VP100**

Bank	Pin Description		Pin Number	No Connects	
	Virtex-II Pro Devices	XC2VPX70 (if Different)		XC2VP70, XC2VPX70	XC2VP100
5	VCCO_5		AH22		
6	VCCO_6		AU38		
6	VCCO_6		AP40		
6	VCCO_6		AL37		
6	VCCO_6		AJ39		
6	VCCO_6		AH29		
6	VCCO_6		AG34		
6	VCCO_6		AG29		
6	VCCO_6		AG28		
6	VCCO_6		AF29		
6	VCCO_6		AF28		
6	VCCO_6		AE40		
6	VCCO_6		AE29		
6	VCCO_6		AE28		
6	VCCO_6		AD29		
6	VCCO_6		AD28		
6	VCCO_6		AC38		
6	VCCO_6		AC35		
6	VCCO_6		AC29		
6	VCCO_6		AC28		
6	VCCO_6		AB29		
6	VCCO_6		AB28		
7	VCCO_7		AA29		
7	VCCO_7		AA28		
7	VCCO_7		Y38		
7	VCCO_7		Y35		
7	VCCO_7		Y29		
7	VCCO_7		Y28		
7	VCCO_7		W29		
7	VCCO_7		W28		
7	VCCO_7		V40		
7	VCCO_7		V29		
7	VCCO_7		V28		
7	VCCO_7		U29		
7	VCCO_7		U28		
7	VCCO_7		T34		

Table 13: **FF1704 — XC2VP70, XC2VPX70, and XC2VP100**

Bank	Pin Description		Pin Number	No Connects	
	Virtex-II Pro Devices	XC2VPX70 (if Different)		XC2VP70, XC2VPX70	XC2VP100
7	VCCO_7		T29		
7	VCCO_7		T28		
7	VCCO_7		R29		
7	VCCO_7		P39		
7	VCCO_7		M37		
7	VCCO_7		J40		
7	VCCO_7		F38		
N/A	CCLK		AY7		
N/A	PROG_B		G35		
N/A	DONE		AW8		
N/A	M0		AV35		
N/A	M1		AY36		
N/A	M2		AW35		
N/A	TCK		G8		
N/A	TDI		C36		
N/A	TDO		C7		
N/A	TMS		F8		
N/A	PWRDWN_B		AV8		
N/A	HSWAP_EN		F35		
N/A	RSVD		D8		
N/A	VBATT		E8		
N/A	DXP		E35		
N/A	DXN		D35		
N/A	AVCCAUXTX2		B40		
N/A	VTTXPAD2		B41		
N/A	TXNPAD2		A41		
N/A	TXPPAD2		A40		
N/A	GNDA2		C39		
N/A	RXPPAD2		A39		
N/A	RXNPAD2		A38		
N/A	VTRXPAD2		B39		
N/A	AVCCAUXRX2		B38		
N/A	AVCCAUXTX3		B36		
N/A	VTTXPAD3		B37		
N/A	TXNPAD3		A37		

Table 13: **FF1704 — XC2VP70, XC2VPX70, and XC2VP100**

Bank	Pin Description		Pin Number	No Connects	
	Virtex-II Pro Devices	XC2VPX70 (if Different)		XC2VP70, XC2VPX70	XC2VP100
N/A	TXPPAD3		A36		
N/A	GNDA3		C35		
N/A	RXPPAD3		A35		
N/A	RXNPAD3		A34		
N/A	VTRXPAD3		B35		
N/A	AVCCAUXRX3		B34		
N/A	AVCCAUXTX4		B32		
N/A	VTTXPAD4		B33		
N/A	TXNPAD4		A33		
N/A	TXPPAD4		A32		
N/A	GNDA4		C31		
N/A	RXPPAD4		A31		
N/A	RXNPAD4		A30		
N/A	VTRXPAD4		B31		
N/A	AVCCAUXRX4		B30		
N/A	AVCCAUXTX5		B28		
N/A	VTTXPAD5		B29		
N/A	TXNPAD5		A29		
N/A	TXPPAD5		A28		
N/A	GNDA5		C27		
N/A	RXPPAD5		A27		
N/A	RXNPAD5		A26		
N/A	VTRXPAD5		B27		
N/A	AVCCAUXRX5		B26		
N/A	AVCCAUXTX6		B24		
N/A	VTTXPAD6		B25		
N/A	TXNPAD6		A25		
N/A	TXPPAD6		A24		
N/A	GNDA6		C22		
N/A	RXPPAD6		A23		
N/A	RXNPAD6		A22		
N/A	VTRXPAD6		B23		
N/A	AVCCAUXRX6		B22		
N/A	AVCCAUXTX7		B20		
N/A	VTTXPAD7		B21		
N/A	TXNPAD7		A21		

Table 13: **FF1704 — XC2VP70, XC2VPX70, and XC2VP100**

Bank	Pin Description		Pin Number	No Connects	
	Virtex-II Pro Devices	XC2VPX70 (if Different)		XC2VP70, XC2VPX70	XC2VP100
N/A	TXPPAD7		A20		
N/A	GNDA7		C21		
N/A	RXPPAD7		A19		
N/A	RXNPAD7		A18		
N/A	VTRXPAD7		B19		
N/A	AVCCAUXRX7		B18		
N/A	AVCCAUXTX8		B16		
N/A	VTTXPAD8		B17		
N/A	TXNPAD8		A17		
N/A	TXPPAD8		A16		
N/A	GNDA8		C16		
N/A	RXPPAD8		A15		
N/A	RXNPAD8		A14		
N/A	VTRXPAD8		B15		
N/A	AVCCAUXRX8		B14		
N/A	AVCCAUXTX9		B12		
N/A	VTTXPAD9		B13		
N/A	TXNPAD9		A13		
N/A	TXPPAD9		A12		
N/A	GNDA9		C12		
N/A	RXPPAD9		A11		
N/A	RXNPAD9		A10		
N/A	VTRXPAD9		B11		
N/A	AVCCAUXRX9		B10		
N/A	AVCCAUXTX10		B8		
N/A	VTTXPAD10		B9		
N/A	TXNPAD10		A9		
N/A	TXPPAD10		A8		
N/A	GNDA10		C8		
N/A	RXPPAD10		A7		
N/A	RXNPAD10		A6		
N/A	VTRXPAD10		B7		
N/A	AVCCAUXRX10		B6		
N/A	AVCCAUXTX11		B4		
N/A	VTTXPAD11		B5		
N/A	TXNPAD11		A5		

Table 13: **FF1704 — XC2VP70, XC2VPX70, and XC2VP100**

Bank	Pin Description		Pin Number	No Connects	
	Virtex-II Pro Devices	XC2VPX70 (if Different)		XC2VP70, XC2VPX70	XC2VP100
N/A	TXPPAD11		A4		
N/A	GNDA11		C4		
N/A	RXPPAD11		A3		
N/A	RXNPAD11		A2		
N/A	VTRXPAD11		B3		
N/A	AVCCAUXRX11		B2		
N/A	AVCCAUXRX14		BA2		
N/A	VTRXPAD14		BA3		
N/A	RXNPAD14		BB2		
N/A	RXPPAD14		BB3		
N/A	GNDA14		AY4		
N/A	TXPPAD14		BB4		
N/A	TXNPAD14		BB5		
N/A	VTTXPAD14		BA5		
N/A	AVCCAUXTX14		BA4		
N/A	AVCCAUXRX15		BA6		
N/A	VTRXPAD15		BA7		
N/A	RXNPAD15		BB6		
N/A	RXPPAD15		BB7		
N/A	GNDA15		AY8		
N/A	TXPPAD15		BB8		
N/A	TXNPAD15		BB9		
N/A	VTTXPAD15		BA9		
N/A	AVCCAUXTX15		BA8		
N/A	AVCCAUXRX16		BA10		
N/A	VTRXPAD16		BA11		
N/A	RXNPAD16		BB10		
N/A	RXPPAD16		BB11		
N/A	GNDA16		AY12		
N/A	TXPPAD16		BB12		
N/A	TXNPAD16		BB13		
N/A	VTTXPAD16		BA13		
N/A	AVCCAUXTX16		BA12		
N/A	AVCCAUXRX17		BA14		
N/A	VTRXPAD17		BA15		
N/A	RXNPAD17		BB14		

Table 13: **FF1704 — XC2VP70, XC2VPX70, and XC2VP100**

Bank	Pin Description		Pin Number	No Connects	
	Virtex-II Pro Devices	XC2VPX70 (if Different)		XC2VP70, XC2VPX70	XC2VP100
N/A	RXPPAD17		BB15		
N/A	GNDA17		AY16		
N/A	TXPPAD17		BB16		
N/A	TXNPAD17		BB17		
N/A	VTTXPAD17		BA17		
N/A	AVCCAUXTX17		BA16		
N/A	AVCCAUXRX18		BA18		
N/A	VTRXPAD18		BA19		
N/A	RXNPAD18		BB18		
N/A	RXPPAD18		BB19		
N/A	GNDA18		AY21		
N/A	TXPPAD18		BB20		
N/A	TXNPAD18		BB21		
N/A	VTTXPAD18		BA21		
N/A	AVCCAUXTX18		BA20		
N/A	AVCCAUXRX19		BA22		
N/A	VTRXPAD19		BA23		
N/A	RXNPAD19		BB22		
N/A	RXPPAD19		BB23		
N/A	GNDA19		AY22		
N/A	TXPPAD19		BB24		
N/A	TXNPAD19		BB25		
N/A	VTTXPAD19		BA25		
N/A	AVCCAUXTX19		BA24		
N/A	AVCCAUXRX20		BA26		
N/A	VTRXPAD20		BA27		
N/A	RXNPAD20		BB26		
N/A	RXPPAD20		BB27		
N/A	GNDA20		AY27		
N/A	TXPPAD20		BB28		
N/A	TXNPAD20		BB29		
N/A	VTTXPAD20		BA29		
N/A	AVCCAUXTX20		BA28		
N/A	AVCCAUXRX21		BA30		
N/A	VTRXPAD21		BA31		
N/A	RXNPAD21		BB30		

Table 13: **FF1704 — XC2VP70, XC2VPX70, and XC2VP100**

Bank	Pin Description		Pin Number	No Connects	
	Virtex-II Pro Devices	XC2VPX70 (if Different)		XC2VP70, XC2VPX70	XC2VP100
N/A	RXPPAD21		BB31		
N/A	GNDA21		AY31		
N/A	TXPPAD21		BB32		
N/A	TXNPAD21		BB33		
N/A	VTTXPAD21		BA33		
N/A	AVCCAUXTX21		BA32		
N/A	AVCCAUXRX22		BA34		
N/A	VTRXPAD22		BA35		
N/A	RXNPAD22		BB34		
N/A	RXPPAD22		BB35		
N/A	GNDA22		AY35		
N/A	TXPPAD22		BB36		
N/A	TXNPAD22		BB37		
N/A	VTTXPAD22		BA37		
N/A	AVCCAUXTX22		BA36		
N/A	AVCCAUXRX23		BA38		
N/A	VTRXPAD23		BA39		
N/A	RXNPAD23		BB38		
N/A	RXPPAD23		BB39		
N/A	GNDA23		AY39		
N/A	TXPPAD23		BB40		
N/A	TXNPAD23		BB41		
N/A	VTTXPAD23		BA41		
N/A	AVCCAUXTX23		BA40		
N/A	VCCINT		AB27		
N/A	VCCINT		AB16		
N/A	VCCINT		AC27		
N/A	VCCINT		AC16		
N/A	VCCINT		AD27		
N/A	VCCINT		AD16		
N/A	VCCINT		AE27		
N/A	VCCINT		AE16		
N/A	VCCINT		AF27		
N/A	VCCINT		AF26		
N/A	VCCINT		AF17		

Table 13: **FF1704 — XC2VP70, XC2VPX70, and XC2VP100**

Bank	Pin Description		Pin Number	No Connects	
	Virtex-II Pro Devices	XC2VPX70 (if Different)		XC2VP70, XC2VPX70	XC2VP100
N/A	VCCINT		AF16		
N/A	VCCINT		AG27		
N/A	VCCINT		AG26		
N/A	VCCINT		AG25		
N/A	VCCINT		AG24		
N/A	VCCINT		AG23		
N/A	VCCINT		AG22		
N/A	VCCINT		AG21		
N/A	VCCINT		AG20		
N/A	VCCINT		AG19		
N/A	VCCINT		AG18		
N/A	VCCINT		AG17		
N/A	VCCINT		AG16		
N/A	VCCINT		AH28		
N/A	VCCINT		AH27		
N/A	VCCINT		AH26		
N/A	VCCINT		AH17		
N/A	VCCINT		AH16		
N/A	VCCINT		AH15		
N/A	VCCINT		AJ29		
N/A	VCCINT		AJ28		
N/A	VCCINT		AJ27		
N/A	VCCINT		AJ16		
N/A	VCCINT		AJ15		
N/A	VCCINT		AJ14		
N/A	VCCINT		AK30		
N/A	VCCINT		AK13		
N/A	VCCINT		AA27		
N/A	VCCINT		AA16		
N/A	VCCINT		Y27		
N/A	VCCINT		Y16		
N/A	VCCINT		W27		
N/A	VCCINT		W16		
N/A	VCCINT		V27		
N/A	VCCINT		V16		
N/A	VCCINT		U27		

Table 13: **FF1704 — XC2VP70, XC2VPX70, and XC2VP100**

Bank	Pin Description		Pin Number	No Connects	
	Virtex-II Pro Devices	XC2VPX70 (if Different)		XC2VP70, XC2VPX70	XC2VP100
N/A	VCCINT		U26		
N/A	VCCINT		U17		
N/A	VCCINT		U16		
N/A	VCCINT		T27		
N/A	VCCINT		T26		
N/A	VCCINT		T25		
N/A	VCCINT		T24		
N/A	VCCINT		T23		
N/A	VCCINT		T22		
N/A	VCCINT		T21		
N/A	VCCINT		T20		
N/A	VCCINT		T19		
N/A	VCCINT		T18		
N/A	VCCINT		T17		
N/A	VCCINT		T16		
N/A	VCCINT		R28		
N/A	VCCINT		R27		
N/A	VCCINT		R26		
N/A	VCCINT		R17		
N/A	VCCINT		R16		
N/A	VCCINT		R15		
N/A	VCCINT		P29		
N/A	VCCINT		P28		
N/A	VCCINT		P27		
N/A	VCCINT		P16		
N/A	VCCINT		P15		
N/A	VCCINT		P14		
N/A	VCCINT		N30		
N/A	VCCINT		N13		
N/A	VCCAUX		AB42		
N/A	VCCAUX		AB41		
N/A	VCCAUX		AB2		
N/A	VCCAUX		AB1		
N/A	VCCAUX		AC42		
N/A	VCCAUX		AC1		
N/A	VCCAUX		AM32		

Table 13: **FF1704 — XC2VP70, XC2VPX70, and XC2VP100**

Bank	Pin Description		Pin Number	No Connects	
	Virtex-II Pro Devices	XC2VPX70 (if Different)		XC2VP70, XC2VPX70	XC2VP100
N/A	VCCAUX		AM11		
N/A	VCCAUX		AN33		
N/A	VCCAUX		AN10		
N/A	VCCAUX		AV39		
N/A	VCCAUX		AV4		
N/A	VCCAUX		AW38		
N/A	VCCAUX		AW22		
N/A	VCCAUX		AW21		
N/A	VCCAUX		AW5		
N/A	VCCAUX		AA42		
N/A	VCCAUX		AA41		
N/A	VCCAUX		AA2		
N/A	VCCAUX		AA1		
N/A	VCCAUX		Y42		
N/A	VCCAUX		Y1		
N/A	VCCAUX		L32		
N/A	VCCAUX		L11		
N/A	VCCAUX		K33		
N/A	VCCAUX		K10		
N/A	VCCAUX		E39		
N/A	VCCAUX		E4		
N/A	VCCAUX		D38		
N/A	VCCAUX		D22		
N/A	VCCAUX		D21		
N/A	VCCAUX		D5		
N/A	GND		AB38		
N/A	GND		AB35		
N/A	GND		AB32		
N/A	GND		AB26		
N/A	GND		AB25		
N/A	GND		AB24		
N/A	GND		AB23		
N/A	GND		AB22		
N/A	GND		AB21		
N/A	GND		AB20		
N/A	GND		AB19		

Table 13: **FF1704 — XC2VP70, XC2VPX70, and XC2VP100**

Bank	Pin Description		Pin Number	No Connects	
	Virtex-II Pro Devices	XC2VPX70 (if Different)		XC2VP70, XC2VPX70	XC2VP100
N/A	GND		AB18		
N/A	GND		AB17		
N/A	GND		AB11		
N/A	GND		AB8		
N/A	GND		AB5		
N/A	GND		AC41		
N/A	GND		AC26		
N/A	GND		AC25		
N/A	GND		AC24		
N/A	GND		AC23		
N/A	GND		AC22		
N/A	GND		AC21		
N/A	GND		AC20		
N/A	GND		AC19		
N/A	GND		AC18		
N/A	GND		AC17		
N/A	GND		AC2		
N/A	GND		AD26		
N/A	GND		AD25		
N/A	GND		AD24		
N/A	GND		AD23		
N/A	GND		AD22		
N/A	GND		AD21		
N/A	GND		AD20		
N/A	GND		AD19		
N/A	GND		AD18		
N/A	GND		AD17		
N/A	GND		AE37		
N/A	GND		AE34		
N/A	GND		AE26		
N/A	GND		AE25		
N/A	GND		AE24		
N/A	GND		AE23		
N/A	GND		AE22		
N/A	GND		AE21		
N/A	GND		AE20		

Table 13: **FF1704 — XC2VP70, XC2VPX70, and XC2VP100**

Bank	Pin Description		Pin Number	No Connects	
	Virtex-II Pro Devices	XC2VPX70 (if Different)		XC2VP70, XC2VPX70	XC2VP100
N/A	GND		AE19		
N/A	GND		AE18		
N/A	GND		AE17		
N/A	GND		AE9		
N/A	GND		AE6		
N/A	GND		AF25		
N/A	GND		AF24		
N/A	GND		AF23		
N/A	GND		AF22		
N/A	GND		AF21		
N/A	GND		AF20		
N/A	GND		AF19		
N/A	GND		AF18		
N/A	GND		AG42		
N/A	GND		AG1		
N/A	GND		AH39		
N/A	GND		AH36		
N/A	GND		AH7		
N/A	GND		AH4		
N/A	GND		AL42		
N/A	GND		AL1		
N/A	GND		AM22		
N/A	GND		AM21		
N/A	GND		AN39		
N/A	GND		AN4		
N/A	GND		AP34		
N/A	GND		AP9		
N/A	GND		AR42		
N/A	GND		AR35		
N/A	GND		AR22		
N/A	GND		AR21		
N/A	GND		AR8		
N/A	GND		AR1		
N/A	GND		AT36		
N/A	GND		AT7		
N/A	GND		AU37		

Table 13: **FF1704 — XC2VP70, XC2VPX70, and XC2VP100**

Bank	Pin Description		Pin Number	No Connects	
	Virtex-II Pro Devices	XC2VPX70 (if Different)		XC2VP70, XC2VPX70	XC2VP100
N/A	GND		AU25		
N/A	GND		AU18		
N/A	GND		AU6		
N/A	GND		AV38		
N/A	GND		AV22		
N/A	GND		AV21		
N/A	GND		AV5		
N/A	GND		AW39		
N/A	GND		AW32		
N/A	GND		AW28		
N/A	GND		AW15		
N/A	GND		AW11		
N/A	GND		AW4		
N/A	GND		AY42		
N/A	GND		AY41		
N/A	GND		AY40		
N/A	GND		AY3		
N/A	GND		AY2		
N/A	GND		AY1		
N/A	GND		BA42		
N/A	GND		BA1		
N/A	GND		AA38		
N/A	GND		AA35		
N/A	GND		AA32		
N/A	GND		AA26		
N/A	GND		AA25		
N/A	GND		AA24		
N/A	GND		AA23		
N/A	GND		AA22		
N/A	GND		AA21		
N/A	GND		AA20		
N/A	GND		AA19		
N/A	GND		AA18		
N/A	GND		AA17		
N/A	GND		AA11		
N/A	GND		AA8		

Table 13: **FF1704 — XC2VP70, XC2VPX70, and XC2VP100**

Bank	Pin Description		Pin Number	No Connects	
	Virtex-II Pro Devices	XC2VPX70 (if Different)		XC2VP70, XC2VPX70	XC2VP100
N/A	GND		AA5		
N/A	GND		Y41		
N/A	GND		Y26		
N/A	GND		Y25		
N/A	GND		Y24		
N/A	GND		Y23		
N/A	GND		Y22		
N/A	GND		Y21		
N/A	GND		Y20		
N/A	GND		Y19		
N/A	GND		Y18		
N/A	GND		Y17		
N/A	GND		Y2		
N/A	GND		W26		
N/A	GND		W25		
N/A	GND		W24		
N/A	GND		W23		
N/A	GND		W22		
N/A	GND		W21		
N/A	GND		W20		
N/A	GND		W19		
N/A	GND		W18		
N/A	GND		W17		
N/A	GND		V37		
N/A	GND		V34		
N/A	GND		V26		
N/A	GND		V25		
N/A	GND		V24		
N/A	GND		V23		
N/A	GND		V22		
N/A	GND		V21		
N/A	GND		V20		
N/A	GND		V19		
N/A	GND		V18		
N/A	GND		V17		
N/A	GND		V9		

Table 13: **FF1704 — XC2VP70, XC2VPX70, and XC2VP100**

Bank	Pin Description		Pin Number	No Connects	
	Virtex-II Pro Devices	XC2VPX70 (if Different)		XC2VP70, XC2VPX70	XC2VP100
N/A	GND		V6		
N/A	GND		U25		
N/A	GND		U24		
N/A	GND		U23		
N/A	GND		U22		
N/A	GND		U21		
N/A	GND		U20		
N/A	GND		U19		
N/A	GND		U18		
N/A	GND		T42		
N/A	GND		T1		
N/A	GND		R39		
N/A	GND		R36		
N/A	GND		R7		
N/A	GND		R4		
N/A	GND		M42		
N/A	GND		M1		
N/A	GND		L22		
N/A	GND		L21		
N/A	GND		K39		
N/A	GND		K4		
N/A	GND		J34		
N/A	GND		J9		
N/A	GND		H42		
N/A	GND		H35		
N/A	GND		H22		
N/A	GND		H21		
N/A	GND		H8		
N/A	GND		H1		
N/A	GND		G36		
N/A	GND		G7		
N/A	GND		F37		
N/A	GND		F25		
N/A	GND		F18		
N/A	GND		F6		
N/A	GND		E38		

Table 13: **FF1704 — XC2VP70, XC2VPX70, and XC2VP100**

Bank	Pin Description		Pin Number	No Connects	
	Virtex-II Pro Devices	XC2VPX70 (if Different)		XC2VP70, XC2VPX70	XC2VP100
N/A	GND		E22		
N/A	GND		E21		
N/A	GND		E5		
N/A	GND		D39		
N/A	GND		D32		
N/A	GND		D28		
N/A	GND		D15		
N/A	GND		D11		
N/A	GND		D4		
N/A	GND		C42		
N/A	GND		C41		
N/A	GND		C40		
N/A	GND		C3		
N/A	GND		C2		
N/A	GND		C1		
N/A	GND		B42		
N/A	GND		B1		
N/A	GND		N14		
N/A	GND		N29		
N/A	GND		AK14		
N/A	GND		AK29		
N/A	GND		P13		
N/A	GND		P30		
N/A	GND		AJ13		
N/A	GND		AJ30		

Notes:
1. See Table 4 for an explanation of the signals available on this pin.

FF1704 Flip-Chip Fine-Pitch BGA Package Specifications (1.00mm pitch)

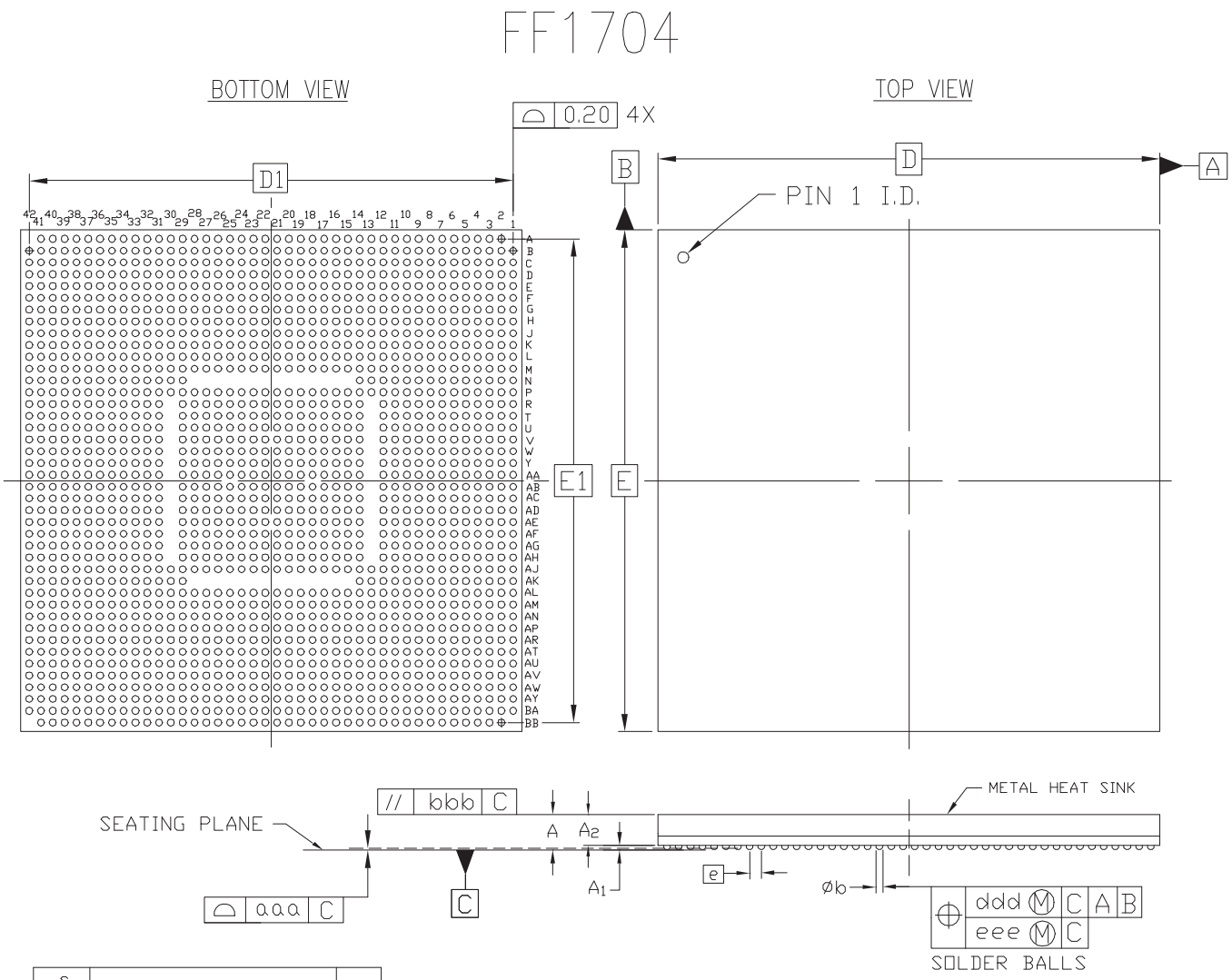

SYMBOL	MILLIMETERS			NOTE
	MIN.	NOM.	MAX.	
A		3.20	3.45	
A_1	0.40	0.50	0.60	
A_2			2.85	
D/E	42.50 BASIC			
D_1/E_1	41.00 REF			
e	1.00 BASIC			
øb	0.50	0.60	0.70	
aaa			0.20	
bbb			0.25	
ddd			0.25	
eee			0.10	
M		42		2

NOTES:

1. ALL DIMENSIONS AND TOLERANCES CONFORM TO ASME Y14.5M-1994
2. SYMBOL "M" IS THE PIN MATRIX SIZE.
3. CONFORMS TO JEDEC MS-034-AAV-1 (DEPOPULATED)

Figure 9: **FF1704 Flip-Chip Fine-Pitch BGA Package Specifications**

FF1696 Flip-Chip Fine-Pitch BGA Package

As shown in Table 14, XC2VP100 Virtex-II Pro devices are available in the FF1696 flip-chip fine-pitch BGA package. Following this table are the FF1696 Flip-Chip Fine-Pitch BGA Package Specifications (1.00mm pitch).

Table 14: **FF1696 — XC2VP100**

Bank	Pin Description	Pin Number	No Connects
			XC2VP100
0	IO_L01N_0/VRP_0	E33	
0	IO_L01P_0/VRN_0	F33	
0	IO_L02N_0	K32	
0	IO_L02P_0	L32	
0	IO_L03N_0	C32	
0	IO_L03P_0/VREF_0	C33	
0	IO_L05_0/No_Pair	G33	
0	IO_L06N_0	A33	
0	IO_L06P_0	B33	
0	IO_L07N_0	F32	
0	IO_L07P_0	G32	
0	IO_L08N_0	H32	
0	IO_L08P_0	J32	
0	IO_L09N_0	D32	
0	IO_L09P_0/VREF_0	E32	
0	IO_L19N_0	A32	
0	IO_L19P_0	B32	
0	IO_L20N_0	K31	
0	IO_L20P_0	L31	
0	IO_L21N_0	H30	
0	IO_L21P_0	G31	
0	IO_L25N_0	E31	
0	IO_L25P_0	F31	
0	IO_L26N_0	H31	
0	IO_L26P_0	J31	
0	IO_L27N_0	D30	
0	IO_L27P_0/VREF_0	D31	
0	IO_L28N_0	B31	
0	IO_L28P_0	C31	
0	IO_L29N_0	K30	
0	IO_L29P_0	L30	
0	IO_L30N_0	F30	
0	IO_L30P_0	G30	
0	IO_L34N_0	B30	

Table 14: **FF1696 — XC2VP100**

Bank	Pin Description	Pin Number	No Connects
			XC2VP100
0	IO_L34P_0	C30	
0	IO_L35N_0	L29	
0	IO_L35P_0	M29	
0	IO_L36N_0	H28	
0	IO_L36P_0/VREF_0	G29	
0	IO_L76N_0	E29	
0	IO_L76P_0	F29	
0	IO_L77N_0	J29	
0	IO_L77P_0	K29	
0	IO_L78N_0	D28	
0	IO_L78P_0	C29	
0	IO_L79N_0	A29	
0	IO_L79P_0	B29	
0	IO_L80_0/No_Pair	L28	
0	IO_L83_0/No_Pair	M28	
0	IO_L84N_0	G27	
0	IO_L84P_0	G28	
0	IO_L85N_0	E28	
0	IO_L85P_0	F28	
0	IO_L86N_0	J28	
0	IO_L86P_0	K28	
0	IO_L87N_0	C27	
0	IO_L87P_0/VREF_0	C28	
0	IO_L37N_0	A28	
0	IO_L37P_0	B28	
0	IO_L38N_0	L27	
0	IO_L38P_0	M27	
0	IO_L39N_0	H26	
0	IO_L39P_0	H27	
0	IO_L43N_0	E27	
0	IO_L43P_0	F27	
0	IO_L44N_0	J27	
0	IO_L44P_0	K27	
0	IO_L45N_0	D26	
0	IO_L45P_0/VREF_0	D27	
0	IO_L10N_0	A27	NC
0	IO_L10P_0	B27	NC

Table 14: **FF1696 — XC2VP100**

Bank	Pin Description	Pin Number	No Connects
			XC2VP100
0	IO_L11N_0	M25	NC
0	IO_L11P_0	M26	NC
0	IO_L12N_0	F26	NC
0	IO_L12P_0	G26	NC
0	IO_L18N_0	B26	NC
0	IO_L18P_0/VREF_0	C26	NC
0	IO_L46N_0	G24	
0	IO_L46P_0	G25	
0	IO_L47N_0	K26	
0	IO_L47P_0	L26	
0	IO_L48N_0	E25	
0	IO_L48P_0	F25	
0	IO_L49N_0	C24	
0	IO_L49P_0	C25	
0	IO_L50_0/No_Pair	L24	
0	IO_L53_0/No_Pair	L25	
0	IO_L54N_0	A25	
0	IO_L54P_0	B25	
0	IO_L55N_0	H23	
0	IO_L55P_0	H24	
0	IO_L56N_0	J25	
0	IO_L56P_0	K25	
0	IO_L57N_0	E24	
0	IO_L57P_0/VREF_0	F24	
0	IO_L58N_0	D23	
0	IO_L58P_0	D24	
0	IO_L59N_0	J24	
0	IO_L59P_0	K24	
0	IO_L60N_0	A24	
0	IO_L60P_0	B24	
0	IO_L64N_0	F23	
0	IO_L64P_0	G23	
0	IO_L65N_0	M22	
0	IO_L65P_0	M23	
0	IO_L66N_0	B23	
0	IO_L66P_0/VREF_0	C23	
0	IO_L67N_0	H22	

Table 14: **FF1696 — XC2VP100**

Bank	Pin Description	Pin Number	No Connects
			XC2VP100
0	IO_L67P_0	J22	
0	IO_L68N_0	K23	
0	IO_L68P_0	L23	
0	IO_L69N_0	F22	
0	IO_L69P_0/VREF_0	G22	
0	IO_L73N_0	D22	
0	IO_L73P_0	E22	
0	IO_L74N_0/GCLK7P	K22	
0	IO_L74P_0/GCLK6S	L22	
0	IO_L75N_0/GCLK5P	B22	
0	IO_L75P_0/GCLK4S	C22	
1	IO_L75N_1/GCLK3P	C21	
1	IO_L75P_1/GCLK2S	B21	
1	IO_L74N_1/GCLK1P	L21	
1	IO_L74P_1/GCLK0S	K21	
1	IO_L73N_1	E21	
1	IO_L73P_1	D21	
1	IO_L69N_1/VREF_1	G21	
1	IO_L69P_1	F21	
1	IO_L68N_1	L20	
1	IO_L68P_1	K20	
1	IO_L67N_1	J21	
1	IO_L67P_1	H21	
1	IO_L66N_1/VREF_1	C20	
1	IO_L66P_1	B20	
1	IO_L65N_1	M20	
1	IO_L65P_1	M21	
1	IO_L64N_1	G20	
1	IO_L64P_1	F20	
1	IO_L60N_1	B19	
1	IO_L60P_1	A19	
1	IO_L59N_1	K19	
1	IO_L59P_1	J19	
1	IO_L58N_1	D19	
1	IO_L58P_1	D20	
1	IO_L57N_1/VREF_1	F19	

Table 14: **FF1696 — XC2VP100**

Bank	Pin Description	Pin Number	No Connects
			XC2VP100
1	IO_L57P_1	E19	
1	IO_L56N_1	K18	
1	IO_L56P_1	J18	
1	IO_L55N_1	H19	
1	IO_L55P_1	H20	
1	IO_L54N_1	B18	
1	IO_L54P_1	A18	
1	IO_L53_1/No_Pair	L18	
1	IO_L50_1/No_Pair	L19	
1	IO_L49N_1	C18	
1	IO_L49P_1	C19	
1	IO_L48N_1	F18	
1	IO_L48P_1	E18	
1	IO_L47N_1	L17	
1	IO_L47P_1	K17	
1	IO_L46N_1	G18	
1	IO_L46P_1	G19	
1	IO_L18N_1/VREF_1	C17	NC
1	IO_L18P_1	B17	NC
1	IO_L12N_1	G17	NC
1	IO_L12P_1	F17	NC
1	IO_L11N_1	M17	NC
1	IO_L11P_1	M18	NC
1	IO_L10N_1	B16	NC
1	IO_L10P_1	A16	NC
1	IO_L45N_1/VREF_1	D16	
1	IO_L45P_1	D17	
1	IO_L44N_1	K16	
1	IO_L44P_1	J16	
1	IO_L43N_1	F16	
1	IO_L43P_1	E16	
1	IO_L39N_1	H16	
1	IO_L39P_1	H17	
1	IO_L38N_1	M16	
1	IO_L38P_1	L16	
1	IO_L37N_1	B15	
1	IO_L37P_1	A15	

Table 14: **FF1696 — XC2VP100**

Bank	Pin Description	Pin Number	No Connects
			XC2VP100
1	IO_L87N_1/VREF_1	C15	
1	IO_L87P_1	C16	
1	IO_L86N_1	K15	
1	IO_L86P_1	J15	
1	IO_L85N_1	F15	
1	IO_L85P_1	E15	
1	IO_L84N_1	G15	
1	IO_L84P_1	G16	
1	IO_L83_1/No_Pair	M15	
1	IO_L80_1/No_Pair	L15	
1	IO_L79N_1	B14	
1	IO_L79P_1	A14	
1	IO_L78N_1	C14	
1	IO_L78P_1	D15	
1	IO_L77N_1	K14	
1	IO_L77P_1	J14	
1	IO_L76N_1	F14	
1	IO_L76P_1	E14	
1	IO_L36N_1/VREF_1	G14	
1	IO_L36P_1	H15	
1	IO_L35N_1	M14	
1	IO_L35P_1	L14	
1	IO_L34N_1	C13	
1	IO_L34P_1	B13	
1	IO_L30N_1	G13	
1	IO_L30P_1	F13	
1	IO_L29N_1	L13	
1	IO_L29P_1	K13	
1	IO_L28N_1	C12	
1	IO_L28P_1	B12	
1	IO_L27N_1/VREF_1	D12	
1	IO_L27P_1	D13	
1	IO_L26N_1	J12	
1	IO_L26P_1	H12	
1	IO_L25N_1	F12	
1	IO_L25P_1	E12	
1	IO_L21N_1	G12	

Table 14: **FF1696 — XC2VP100**

Bank	Pin Description	Pin Number	No Connects
			XC2VP100
1	IO_L21P_1	H13	
1	IO_L20N_1	L12	
1	IO_L20P_1	K12	
1	IO_L19N_1	B11	
1	IO_L19P_1	A11	
1	IO_L09N_1/VREF_1	E11	
1	IO_L09P_1	D11	
1	IO_L08N_1	J11	
1	IO_L08P_1	H11	
1	IO_L07N_1	G11	
1	IO_L07P_1	F11	
1	IO_L06N_1	B10	
1	IO_L06P_1	A10	
1	IO_L05_1/No_Pair	G10	
1	IO_L03N_1/VREF_1	C10	
1	IO_L03P_1	C11	
1	IO_L02N_1	L11	
1	IO_L02P_1	K11	
1	IO_L01N_1/VRP_1	F10	
1	IO_L01P_1/VRN_1	E10	
2	IO_L01N_2/VRP_2	B8	
2	IO_L01P_2/VRN_2	A8	
2	IO_L02N_2	C9	
2	IO_L02P_2	B9	
2	IO_L03N_2	B7	
2	IO_L03P_2	A7	
2	IO_L04N_2/VREF_2	B6	
2	IO_L04P_2	A6	
2	IO_L05N_2	D8	
2	IO_L05P_2	D9	
2	IO_L06N_2	B4	
2	IO_L06P_2	A4	
2	IO_L73N_2	C7	
2	IO_L73P_2	C8	
2	IO_L74N_2	G9	
2	IO_L74P_2	F9	

Table 14: **FF1696 — XC2VP100**

Bank	Pin Description	Pin Number	No Connects
			XC2VP100
2	IO_L75N_2	C5	
2	IO_L75P_2	B5	
2	IO_L76N_2/VREF_2	D7	
2	IO_L76P_2	C6	
2	IO_L77N_2	H8	
2	IO_L77P_2	H9	
2	IO_L78N_2	C3	
2	IO_L78P_2	C4	
2	IO_L79N_2	D1	
2	IO_L79P_2	D2	
2	IO_L80N_2	J8	
2	IO_L80P_2	K9	
2	IO_L81N_2	E6	
2	IO_L81P_2	D5	
2	IO_L82N_2/VREF_2	E4	
2	IO_L82P_2	D4	
2	IO_L83N_2	L8	
2	IO_L83P_2	L9	
2	IO_L84N_2	E3	
2	IO_L84P_2	D3	
2	IO_L61N_2	F8	
2	IO_L61P_2	E8	
2	IO_L62N_2	M8	
2	IO_L62P_2	M9	
2	IO_L63N_2	F7	
2	IO_L63P_2	E7	
2	IO_L64N_2/VREF_2	F3	
2	IO_L64P_2	E2	
2	IO_L65N_2	N12	
2	IO_L65P_2	P12	
2	IO_L66N_2	F1	
2	IO_L66P_2	F2	
2	IO_L67N_2	G7	
2	IO_L67P_2	G8	
2	IO_L68N_2	N10	
2	IO_L68P_2	N11	
2	IO_L69N_2	G6	

Table 14: **FF1696 — XC2VP100**

Bank	Pin Description	Pin Number	No Connects
			XC2VP100
2	IO_L69P_2	F6	
2	IO_L70N_2/VREF_2	G5	
2	IO_L70P_2	F5	
2	IO_L71N_2	P10	
2	IO_L71P_2	P11	
2	IO_L72N_2	G3	
2	IO_L72P_2	G4	
2	IO_L07N_2	G1	
2	IO_L07P_2	G2	
2	IO_L08N_2	N8	
2	IO_L08P_2	P9	
2	IO_L09N_2	H6	
2	IO_L09P_2	H7	
2	IO_L10N_2/VREF_2	H4	
2	IO_L10P_2	H5	
2	IO_L11N_2	R12	
2	IO_L11P_2	T12	
2	IO_L12N_2	H2	
2	IO_L12P_2	H3	
2	IO_L13N_2	J6	
2	IO_L13P_2	J7	
2	IO_L14N_2	R10	
2	IO_L14P_2	R11	
2	IO_L15N_2	J3	
2	IO_L15P_2	J4	
2	IO_L16N_2/VREF_2	J2	
2	IO_L16P_2	H1	
2	IO_L17N_2	R8	
2	IO_L17P_2	R9	
2	IO_L18N_2	K5	
2	IO_L18P_2	K6	
2	IO_L19N_2	K1	
2	IO_L19P_2	K2	
2	IO_L20N_2	T10	
2	IO_L20P_2	T11	
2	IO_L21N_2	L7	
2	IO_L21P_2	K7	

Table 14: **FF1696 — XC2VP100**

Bank	Pin Description	Pin Number	No Connects
			XC2VP100
2	IO_L22N_2/VREF_2	L4	
2	IO_L22P_2	L5	
2	IO_L23N_2	T8	
2	IO_L23P_2	T9	
2	IO_L24N_2	L3	
2	IO_L24P_2	K3	
2	IO_L25N_2	L1	
2	IO_L25P_2	L2	
2	IO_L26N_2	U12	
2	IO_L26P_2	V12	
2	IO_L27N_2	M7	
2	IO_L27P_2	L6	
2	IO_L28N_2/VREF_2	M5	
2	IO_L28P_2	M6	
2	IO_L29N_2	U10	
2	IO_L29P_2	U11	
2	IO_L30N_2	M3	
2	IO_L30P_2	M4	
2	IO_L31N_2	N6	
2	IO_L31P_2	N7	
2	IO_L32N_2	U7	
2	IO_L32P_2	U8	
2	IO_L33N_2	N3	
2	IO_L33P_2	N4	
2	IO_L34N_2/VREF_2	N2	
2	IO_L34P_2	M2	
2	IO_L35N_2	V10	
2	IO_L35P_2	V11	
2	IO_L36N_2	P6	
2	IO_L36P_2	P7	
2	IO_L37N_2	P1	
2	IO_L37P_2	P2	
2	IO_L38N_2	V8	
2	IO_L38P_2	V9	
2	IO_L39N_2	R6	
2	IO_L39P_2	P5	
2	IO_L40N_2/VREF_2	R4	

Table 14: **FF1696 — XC2VP100**

Bank	Pin Description	Pin Number	No Connects
			XC2VP100
2	IO_L40P_2	R5	
2	IO_L41N_2	V6	
2	IO_L41P_2	V7	
2	IO_L42N_2	R3	
2	IO_L42P_2	P3	
2	IO_L43N_2	R1	
2	IO_L43P_2	R2	
2	IO_L44N_2	W10	
2	IO_L44P_2	W11	
2	IO_L45N_2	T7	
2	IO_L45P_2	R7	
2	IO_L46N_2/VREF_2	T4	
2	IO_L46P_2	T5	
2	IO_L47N_2	W9	
2	IO_L47P_2	Y10	
2	IO_L48N_2	T1	
2	IO_L48P_2	T2	
2	IO_L49N_2	U6	
2	IO_L49P_2	T6	
2	IO_L50N_2	W7	
2	IO_L50P_2	Y8	
2	IO_L51N_2	U4	
2	IO_L51P_2	T3	
2	IO_L52N_2/VREF_2	U2	
2	IO_L52P_2	U3	
2	IO_L53N_2	Y11	
2	IO_L53P_2	Y12	
2	IO_L54N_2	V4	
2	IO_L54P_2	V5	
2	IO_L55N_2	V1	
2	IO_L55P_2	V2	
2	IO_L56N_2	Y6	
2	IO_L56P_2	Y7	
2	IO_L57N_2	W5	
2	IO_L57P_2	W6	
2	IO_L58N_2/VREF_2	W3	
2	IO_L58P_2	V3	

Table 14: **FF1696 — XC2VP100**

Bank	Pin Description	Pin Number	No Connects
			XC2VP100
2	IO_L59N_2	AA11	
2	IO_L59P_2	AA12	
2	IO_L60N_2	W1	
2	IO_L60P_2	W2	
2	IO_L85N_2	Y2	
2	IO_L85P_2	Y3	
2	IO_L86N_2	AA9	
2	IO_L86P_2	AA10	
2	IO_L87N_2	AA5	
2	IO_L87P_2	AA6	
2	IO_L88N_2/VREF_2	AA4	
2	IO_L88P_2	Y4	
2	IO_L89N_2	AA7	
2	IO_L89P_2	AA8	
2	IO_L90N_2	AA2	
2	IO_L90P_2	AA3	
3	IO_L90N_3	AB5	
3	IO_L90P_3	AB6	
3	IO_L89N_3	AB11	
3	IO_L89P_3	AB12	
3	IO_L88N_3	AB2	
3	IO_L88P_3	AB3	
3	IO_L87N_3/VREF_3	AB4	
3	IO_L87P_3	AC4	
3	IO_L86N_3	AB9	
3	IO_L86P_3	AB10	
3	IO_L85N_3	AC2	
3	IO_L85P_3	AC3	
3	IO_L60N_3	AD5	
3	IO_L60P_3	AD6	
3	IO_L59N_3	AB7	
3	IO_L59P_3	AB8	
3	IO_L58N_3	AD1	
3	IO_L58P_3	AD2	
3	IO_L57N_3/VREF_3	AE4	
3	IO_L57P_3	AE5	

Table 14: **FF1696 — XC2VP100**

Bank	Pin Description	Pin Number	No Connects
			XC2VP100
3	IO_L56N_3	AC11	
3	IO_L56P_3	AC12	
3	IO_L55N_3	AD3	
3	IO_L55P_3	AE3	
3	IO_L54N_3	AE1	
3	IO_L54P_3	AE2	
3	IO_L53N_3	AC6	
3	IO_L53P_3	AC7	
3	IO_L52N_3	AF2	
3	IO_L52P_3	AF3	
3	IO_L51N_3/VREF_3	AF6	
3	IO_L51P_3	AG6	
3	IO_L50N_3	AD10	
3	IO_L50P_3	AD11	
3	IO_L49N_3	AG4	
3	IO_L49P_3	AG5	
3	IO_L48N_3	AF4	
3	IO_L48P_3	AG3	
3	IO_L47N_3	AC10	
3	IO_L47P_3	AD9	
3	IO_L46N_3	AG1	
3	IO_L46P_3	AG2	
3	IO_L45N_3/VREF_3	AG7	
3	IO_L45P_3	AH7	
3	IO_L44N_3	AC8	
3	IO_L44P_3	AD7	
3	IO_L43N_3	AH4	
3	IO_L43P_3	AH5	
3	IO_L42N_3	AH1	
3	IO_L42P_3	AH2	
3	IO_L41N_3	AE10	
3	IO_L41P_3	AE11	
3	IO_L40N_3	AJ6	
3	IO_L40P_3	AJ7	
3	IO_L39N_3/VREF_3	AH6	
3	IO_L39P_3	AJ5	
3	IO_L38N_3	AE8	

Table 14: **FF1696 — XC2VP100**

Bank	Pin Description	Pin Number	No Connects
			XC2VP100
3	IO_L38P_3	AE9	
3	IO_L37N_3	AH3	
3	IO_L37P_3	AJ3	
3	IO_L36N_3	AJ1	
3	IO_L36P_3	AJ2	
3	IO_L35N_3	AE6	
3	IO_L35P_3	AE7	
3	IO_L34N_3	AK6	
3	IO_L34P_3	AK7	
3	IO_L33N_3/VREF_3	AK3	
3	IO_L33P_3	AK4	
3	IO_L32N_3	AE12	
3	IO_L32P_3	AF12	
3	IO_L31N_3	AL5	
3	IO_L31P_3	AL6	
3	IO_L30N_3	AL3	
3	IO_L30P_3	AL4	
3	IO_L29N_3	AF10	
3	IO_L29P_3	AF11	
3	IO_L28N_3	AK2	
3	IO_L28P_3	AL2	
3	IO_L27N_3/VREF_3	AL7	
3	IO_L27P_3	AM6	
3	IO_L26N_3	AF7	
3	IO_L26P_3	AF8	
3	IO_L25N_3	AM4	
3	IO_L25P_3	AM5	
3	IO_L24N_3	AM1	
3	IO_L24P_3	AM2	
3	IO_L23N_3	AG10	
3	IO_L23P_3	AG11	
3	IO_L22N_3	AM7	
3	IO_L22P_3	AN7	
3	IO_L21N_3/VREF_3	AN5	
3	IO_L21P_3	AN6	
3	IO_L20N_3	AG8	
3	IO_L20P_3	AG9	

Table 14: **FF1696 — XC2VP100**

Bank	Pin Description	Pin Number	No Connects
			XC2VP100
3	IO_L19N_3	AM3	
3	IO_L19P_3	AN3	
3	IO_L18N_3	AN1	
3	IO_L18P_3	AN2	
3	IO_L17N_3	AG12	
3	IO_L17P_3	AH12	
3	IO_L16N_3	AP6	
3	IO_L16P_3	AP7	
3	IO_L15N_3/VREF_3	AP3	
3	IO_L15P_3	AP4	
3	IO_L14N_3	AH10	
3	IO_L14P_3	AH11	
3	IO_L13N_3	AR6	
3	IO_L13P_3	AR7	
3	IO_L12N_3	AR4	
3	IO_L12P_3	AR5	
3	IO_L11N_3	AH8	
3	IO_L11P_3	AH9	
3	IO_L10N_3	AR2	
3	IO_L10P_3	AR3	
3	IO_L09N_3/VREF_3	AP2	
3	IO_L09P_3	AR1	
3	IO_L08N_3	AJ10	
3	IO_L08P_3	AJ11	
3	IO_L07N_3	AT7	
3	IO_L07P_3	AT8	
3	IO_L72N_3	AT3	
3	IO_L72P_3	AT4	
3	IO_L71N_3	AJ12	
3	IO_L71P_3	AK12	
3	IO_L70N_3	AT1	
3	IO_L70P_3	AT2	
3	IO_L69N_3/VREF_3	AT6	
3	IO_L69P_3	AU6	
3	IO_L68N_3	AK10	
3	IO_L68P_3	AK11	
3	IO_L67N_3	AT5	

Table 14: **FF1696 — XC2VP100**

Bank	Pin Description	Pin Number	No Connects
			XC2VP100
3	IO_L67P_3	AU5	
3	IO_L66N_3	AU1	
3	IO_L66P_3	AU2	
3	IO_L65N_3	AJ9	
3	IO_L65P_3	AK8	
3	IO_L64N_3	AU8	
3	IO_L64P_3	AV8	
3	IO_L63N_3/VREF_3	AU7	
3	IO_L63P_3	AV7	
3	IO_L62N_3	AL8	
3	IO_L62P_3	AL9	
3	IO_L61N_3	AU3	
3	IO_L61P_3	AV2	
3	IO_L84N_3	AV6	
3	IO_L84P_3	AW5	
3	IO_L83N_3	AM8	
3	IO_L83P_3	AM9	
3	IO_L82N_3	AV4	
3	IO_L82P_3	AW4	
3	IO_L81N_3/VREF_3	AV3	
3	IO_L81P_3	AW3	
3	IO_L80N_3	AN9	
3	IO_L80P_3	AP8	
3	IO_L79N_3	AW1	
3	IO_L79P_3	AW2	
3	IO_L78N_3	AY7	
3	IO_L78P_3	AY8	
3	IO_L77N_3	AR8	
3	IO_L77P_3	AR9	
3	IO_L76N_3	AW7	
3	IO_L76P_3	AY6	
3	IO_L75N_3/VREF_3	AY3	
3	IO_L75P_3	AY4	
3	IO_L74N_3	AT9	
3	IO_L74P_3	AU9	
3	IO_L73N_3	AY5	
3	IO_L73P_3	BA5	

Table 14: **FF1696 — XC2VP100**

Bank	Pin Description	Pin Number	No Connects
			XC2VP100
3	IO_L06N_3	BA8	
3	IO_L06P_3	BB8	
3	IO_L05N_3	AW8	
3	IO_L05P_3	AW9	
3	IO_L04N_3	BA7	
3	IO_L04P_3	BB7	
3	IO_L03N_3/VREF_3	BA6	
3	IO_L03P_3	BB6	
3	IO_L02N_3	AY9	
3	IO_L02P_3	BA9	
3	IO_L01N_3/VRP_3	BA4	
3	IO_L01P_3/VRN_3	BB4	
4	IO_L01N_4/BUSY/DOUT(1)	AL11	
4	IO_L01P_4/INIT_B	AL12	
4	IO_L02N_4/D0/DIN(1)	AV10	
4	IO_L02P_4/D1	AU10	
4	IO_L03N_4/D2	AN11	
4	IO_L03P_4/D3	AM11	
4	IO_L05_4/No_Pair	AT10	
4	IO_L06N_4/VRP_4	AY11	
4	IO_L06P_4/VRN_4	AY10	
4	IO_L07N_4	BB10	
4	IO_L07P_4/VREF_4	BA10	
4	IO_L08N_4	AU11	
4	IO_L08P_4	AT11	
4	IO_L09N_4	AR11	
4	IO_L09P_4/VREF_4	AP11	
4	IO_L19N_4	AW11	
4	IO_L19P_4	AV11	
4	IO_L20N_4	BB11	
4	IO_L20P_4	BA11	
4	IO_L21N_4	AN12	
4	IO_L21P_4	AM12	
4	IO_L25N_4	AR13	
4	IO_L25P_4	AT12	
4	IO_L26N_4	AV12	

Table 14: **FF1696 — XC2VP100**

Bank	Pin Description	Pin Number	No Connects
			XC2VP100
4	IO_L26P_4	AU12	
4	IO_L27N_4	AR12	
4	IO_L27P_4/VREF_4	AP12	
4	IO_L28N_4	AW13	
4	IO_L28P_4	AW12	
4	IO_L29N_4	BA12	
4	IO_L29P_4	AY12	
4	IO_L30N_4	AN13	
4	IO_L30P_4	AM13	
4	IO_L34N_4	AU13	
4	IO_L34P_4	AT13	
4	IO_L35N_4	BA13	
4	IO_L35P_4	AY13	
4	IO_L36N_4	AM14	
4	IO_L36P_4/VREF_4	AL14	
4	IO_L76N_4	AR15	
4	IO_L76P_4	AT14	
4	IO_L77N_4	AV14	
4	IO_L77P_4	AU14	
4	IO_L78N_4	AP14	
4	IO_L78P_4	AN14	
4	IO_L79N_4	AW15	
4	IO_L79P_4	AY14	
4	IO_L80_4/No_Pair	BB14	
4	IO_L83_4/No_Pair	BA14	
4	IO_L84N_4	AM15	
4	IO_L84P_4	AL15	
4	IO_L85N_4	AT16	
4	IO_L85P_4	AT15	
4	IO_L86N_4	AV15	
4	IO_L86P_4	AU15	
4	IO_L87N_4	AP15	
4	IO_L87P_4/VREF_4	AN15	
4	IO_L37N_4	AY16	
4	IO_L37P_4	AY15	
4	IO_L38N_4	BB15	
4	IO_L38P_4	BA15	

Table 14: **FF1696 — XC2VP100**

Bank	Pin Description	Pin Number	No Connects
			XC2VP100
4	IO_L39N_4	AM16	
4	IO_L39P_4	AL16	
4	IO_L43N_4	AR17	
4	IO_L43P_4	AR16	
4	IO_L44N_4	AV16	
4	IO_L44P_4	AU16	
4	IO_L45N_4	AP16	
4	IO_L45P_4/VREF_4	AN16	
4	IO_L10N_4	AW17	NC
4	IO_L10P_4	AW16	NC
4	IO_L11N_4	BB16	NC
4	IO_L11P_4	BA16	NC
4	IO_L12N_4	AL18	NC
4	IO_L12P_4	AL17	NC
4	IO_L16N_4	AU17	NC
4	IO_L16P_4	AT17	NC
4	IO_L18N_4	BA17	NC
4	IO_L18P_4/VREF_4	AY17	NC
4	IO_L46N_4	AT19	
4	IO_L46P_4	AT18	
4	IO_L47N_4	AN17	
4	IO_L47P_4	AM17	
4	IO_L48N_4	AV18	
4	IO_L48P_4	AU18	
4	IO_L49N_4	AY19	
4	IO_L49P_4	AY18	
4	IO_L50_4/No_Pair	AM19	
4	IO_L53_4/No_Pair	AM18	
4	IO_L54N_4	BB18	
4	IO_L54P_4	BA18	
4	IO_L55N_4	AR20	
4	IO_L55P_4	AR19	
4	IO_L56N_4	AP18	
4	IO_L56P_4	AN18	
4	IO_L57N_4	AV19	
4	IO_L57P_4/VREF_4	AU19	
4	IO_L58N_4	AW20	

Table 14: **FF1696 — XC2VP100**

Bank	Pin Description	Pin Number	No Connects
			XC2VP100
4	IO_L58P_4	AW19	
4	IO_L59N_4	AP19	
4	IO_L59P_4	AN19	
4	IO_L60N_4	BB19	
4	IO_L60P_4	BA19	
4	IO_L64N_4	AU20	
4	IO_L64P_4	AT20	
4	IO_L65N_4	AL21	
4	IO_L65P_4	AL20	
4	IO_L66N_4	BA20	
4	IO_L66P_4/VREF_4	AY20	
4	IO_L67N_4	AR21	
4	IO_L67P_4	AP21	
4	IO_L68N_4	AN20	
4	IO_L68P_4	AM20	
4	IO_L69N_4	AU21	
4	IO_L69P_4/VREF_4	AT21	
4	IO_L73N_4	AW21	
4	IO_L73P_4	AV21	
4	IO_L74N_4/GCLK3S	AN21	
4	IO_L74P_4/GCLK2P	AM21	
4	IO_L75N_4/GCLK1S	BA21	
4	IO_L75P_4/GCLK0P	AY21	
5	IO_L75N_5/GCLK7S	AY22	
5	IO_L75P_5/GCLK6P	BA22	
5	IO_L74N_5/GCLK5S	AM22	
5	IO_L74P_5/GCLK4P	AN22	
5	IO_L73N_5	AV22	
5	IO_L73P_5	AW22	
5	IO_L69N_5/VREF_5	AT22	
5	IO_L69P_5	AU22	
5	IO_L68N_5	AM23	
5	IO_L68P_5	AN23	
5	IO_L67N_5	AP22	
5	IO_L67P_5	AR22	
5	IO_L66N_5/VREF_5	AY23	

Table 14: **FF1696 — XC2VP100**

Bank	Pin Description	Pin Number	No Connects
			XC2VP100
5	IO_L66P_5	BA23	
5	IO_L65N_5	AL23	
5	IO_L65P_5	AL22	
5	IO_L64N_5	AT23	
5	IO_L64P_5	AU23	
5	IO_L60N_5	BA24	
5	IO_L60P_5	BB24	
5	IO_L59N_5	AN24	
5	IO_L59P_5	AP24	
5	IO_L58N_5	AW24	
5	IO_L58P_5	AW23	
5	IO_L57N_5/VREF_5	AU24	
5	IO_L57P_5	AV24	
5	IO_L56N_5	AN25	
5	IO_L56P_5	AP25	
5	IO_L55N_5	AR24	
5	IO_L55P_5	AR23	
5	IO_L54N_5	BA25	
5	IO_L54P_5	BB25	
5	IO_L53_5/No_Pair	AM25	
5	IO_L50_5/No_Pair	AM24	
5	IO_L49N_5	AY25	
5	IO_L49P_5	AY24	
5	IO_L48N_5	AU25	
5	IO_L48P_5	AV25	
5	IO_L47N_5	AM26	
5	IO_L47P_5	AN26	
5	IO_L46N_5	AT25	
5	IO_L46P_5	AT24	
5	IO_L18N_5/VREF_5	AY26	NC
5	IO_L18P_5	BA26	NC
5	IO_L16N_5	AT26	NC
5	IO_L16P_5	AU26	NC
5	IO_L12N_5	AL26	NC
5	IO_L12P_5	AL25	NC
5	IO_L11N_5	BA27	NC
5	IO_L11P_5	BB27	NC

Table 14: **FF1696 — XC2VP100**

Bank	Pin Description	Pin Number	No Connects
			XC2VP100
5	IO_L10N_5	AW27	NC
5	IO_L10P_5	AW26	NC
5	IO_L45N_5/VREF_5	AN27	
5	IO_L45P_5	AP27	
5	IO_L44N_5	AU27	
5	IO_L44P_5	AV27	
5	IO_L43N_5	AR27	
5	IO_L43P_5	AR26	
5	IO_L39N_5	AL27	
5	IO_L39P_5	AM27	
5	IO_L38N_5	BA28	
5	IO_L38P_5	BB28	
5	IO_L37N_5	AY28	
5	IO_L37P_5	AY27	
5	IO_L87N_5/VREF_5	AN28	
5	IO_L87P_5	AP28	
5	IO_L86N_5	AU28	
5	IO_L86P_5	AV28	
5	IO_L85N_5	AT28	
5	IO_L85P_5	AT27	
5	IO_L84N_5	AL28	
5	IO_L84P_5	AM28	
5	IO_L83_5/No_Pair	BA29	
5	IO_L80_5/No_Pair	BB29	
5	IO_L79N_5	AY29	
5	IO_L79P_5	AW28	
5	IO_L78N_5	AN29	
5	IO_L78P_5	AP29	
5	IO_L77N_5	AU29	
5	IO_L77P_5	AV29	
5	IO_L76N_5	AT29	
5	IO_L76P_5	AR28	
5	IO_L36N_5/VREF_5	AL29	
5	IO_L36P_5	AM29	
5	IO_L35N_5	AY30	
5	IO_L35P_5	BA30	
5	IO_L34N_5	AT30	

Table 14: **FF1696 — XC2VP100**

Bank	Pin Description	Pin Number	No Connects
			XC2VP100
5	IO_L34P_5	AU30	
5	IO_L30N_5	AM30	
5	IO_L30P_5	AN30	
5	IO_L29N_5	AY31	
5	IO_L29P_5	BA31	
5	IO_L28N_5	AW31	
5	IO_L28P_5	AW30	
5	IO_L27N_5/VREF_5	AP31	
5	IO_L27P_5	AR31	
5	IO_L26N_5	AU31	
5	IO_L26P_5	AV31	
5	IO_L25N_5	AT31	
5	IO_L25P_5	AR30	
5	IO_L21N_5	AM31	
5	IO_L21P_5	AN31	
5	IO_L20N_5	BA32	
5	IO_L20P_5	BB32	
5	IO_L19N_5	AV32	
5	IO_L19P_5	AW32	
5	IO_L09N_5/VREF_5	AP32	
5	IO_L09P_5	AR32	
5	IO_L08N_5	AT32	
5	IO_L08P_5	AU32	
5	IO_L07N_5/VREF_5	BA33	
5	IO_L07P_5	BB33	
5	IO_L06N_5/VRP_5	AY33	
5	IO_L06P_5/VRN_5	AY32	
5	IO_L05_5/No_Pair	AT33	
5	IO_L03N_5/D4	AM32	
5	IO_L03P_5/D5	AN32	
5	IO_L02N_5/D6	AU33	
5	IO_L02P_5/D7	AV33	
5	IO_L01N_5/RDWR_B	AL31	
5	IO_L01P_5/CS_B	AL32	
6	IO_L01P_6/VRN_6	BB39	
6	IO_L01N_6/VRP_6	BA39	

Table 14: **FF1696 — XC2VP100**

Bank	Pin Description	Pin Number	No Connects
			XC2VP100
6	IO_L02P_6	BA34	
6	IO_L02N_6	AY34	
6	IO_L03P_6	BB37	
6	IO_L03N_6/VREF_6	BA37	
6	IO_L04P_6	BB36	
6	IO_L04N_6	BA36	
6	IO_L05P_6	AW34	
6	IO_L05N_6	AW35	
6	IO_L06P_6	BB35	
6	IO_L06N_6	BA35	
6	IO_L73P_6	BA38	
6	IO_L73N_6	AY38	
6	IO_L74P_6	AU34	
6	IO_L74N_6	AT34	
6	IO_L75P_6	AY39	
6	IO_L75N_6/VREF_6	AY40	
6	IO_L76P_6	AY37	
6	IO_L76N_6	AW36	
6	IO_L77P_6	AR34	
6	IO_L77N_6	AR35	
6	IO_L78P_6	AY35	
6	IO_L78N_6	AY36	
6	IO_L79P_6	AW41	
6	IO_L79N_6	AW42	
6	IO_L80P_6	AP35	
6	IO_L80N_6	AN34	
6	IO_L81P_6	AW40	
6	IO_L81N_6/VREF_6	AV40	
6	IO_L82P_6	AW39	
6	IO_L82N_6	AV39	
6	IO_L83P_6	AM34	
6	IO_L83N_6	AM35	
6	IO_L84P_6	AW38	
6	IO_L84N_6	AV37	
6	IO_L61P_6	AV41	
6	IO_L61N_6	AU40	
6	IO_L62P_6	AL34	

Table 14: **FF1696 — XC2VP100**

Bank	Pin Description	Pin Number	No Connects
			XC2VP100
6	IO_L62N_6	AL35	
6	IO_L63P_6	AV36	
6	IO_L63N_6/VREF_6	AU36	
6	IO_L64P_6	AV35	
6	IO_L64N_6	AU35	
6	IO_L65P_6	AK35	
6	IO_L65N_6	AJ34	
6	IO_L66P_6	AU41	
6	IO_L66N_6	AU42	
6	IO_L67P_6	AU38	
6	IO_L67N_6	AT38	
6	IO_L68P_6	AK32	
6	IO_L68N_6	AK33	
6	IO_L69P_6	AU37	
6	IO_L69N_6/VREF_6	AT37	
6	IO_L70P_6	AT41	
6	IO_L70N_6	AT42	
6	IO_L71P_6	AK31	
6	IO_L71N_6	AJ31	
6	IO_L72P_6	AT39	
6	IO_L72N_6	AT40	
6	IO_L07P_6	AT35	
6	IO_L07N_6	AT36	
6	IO_L08P_6	AJ32	
6	IO_L08N_6	AJ33	
6	IO_L09P_6	AR42	
6	IO_L09N_6/VREF_6	AP41	
6	IO_L10P_6	AR40	
6	IO_L10N_6	AR41	
6	IO_L11P_6	AH34	
6	IO_L11N_6	AH35	
6	IO_L12P_6	AR38	
6	IO_L12N_6	AR39	
6	IO_L13P_6	AR36	
6	IO_L13N_6	AR37	
6	IO_L14P_6	AH32	
6	IO_L14N_6	AH33	

Table 14: **FF1696 — XC2VP100**

Bank	Pin Description	Pin Number	No Connects
			XC2VP100
6	IO_L15P_6	AP39	
6	IO_L15N_6/VREF_6	AP40	
6	IO_L16P_6	AP36	
6	IO_L16N_6	AP37	
6	IO_L17P_6	AH31	
6	IO_L17N_6	AG31	
6	IO_L18P_6	AN41	
6	IO_L18N_6	AN42	
6	IO_L19P_6	AN40	
6	IO_L19N_6	AM40	
6	IO_L20P_6	AG34	
6	IO_L20N_6	AG35	
6	IO_L21P_6	AN37	
6	IO_L21N_6/VREF_6	AN38	
6	IO_L22P_6	AN36	
6	IO_L22N_6	AM36	
6	IO_L23P_6	AG32	
6	IO_L23N_6	AG33	
6	IO_L24P_6	AM41	
6	IO_L24N_6	AM42	
6	IO_L25P_6	AM38	
6	IO_L25N_6	AM39	
6	IO_L26P_6	AF35	
6	IO_L26N_6	AF36	
6	IO_L27P_6	AM37	
6	IO_L27N_6/VREF_6	AL36	
6	IO_L28P_6	AL41	
6	IO_L28N_6	AK41	
6	IO_L29P_6	AF32	
6	IO_L29N_6	AF33	
6	IO_L30P_6	AL39	
6	IO_L30N_6	AL40	
6	IO_L31P_6	AL37	
6	IO_L31N_6	AL38	
6	IO_L32P_6	AF31	
6	IO_L32N_6	AE31	
6	IO_L33P_6	AK39	

Table 14: **FF1696 — XC2VP100**

Bank	Pin Description	Pin Number	No Connects
			XC2VP100
6	IO_L33N_6/VREF_6	AK40	
6	IO_L34P_6	AK36	
6	IO_L34N_6	AK37	
6	IO_L35P_6	AE36	
6	IO_L35N_6	AE37	
6	IO_L36P_6	AJ41	
6	IO_L36N_6	AJ42	
6	IO_L37P_6	AJ40	
6	IO_L37N_6	AH40	
6	IO_L38P_6	AE34	
6	IO_L38N_6	AE35	
6	IO_L39P_6	AJ38	
6	IO_L39N_6/VREF_6	AH37	
6	IO_L40P_6	AJ36	
6	IO_L40N_6	AJ37	
6	IO_L41P_6	AE32	
6	IO_L41N_6	AE33	
6	IO_L42P_6	AH41	
6	IO_L42N_6	AH42	
6	IO_L43P_6	AH38	
6	IO_L43N_6	AH39	
6	IO_L44P_6	AD36	
6	IO_L44N_6	AC35	
6	IO_L45P_6	AH36	
6	IO_L45N_6/VREF_6	AG36	
6	IO_L46P_6	AG41	
6	IO_L46N_6	AG42	
6	IO_L47P_6	AD34	
6	IO_L47N_6	AC33	
6	IO_L48P_6	AG40	
6	IO_L48N_6	AF39	
6	IO_L49P_6	AG38	
6	IO_L49N_6	AG39	
6	IO_L50P_6	AD32	
6	IO_L50N_6	AD33	
6	IO_L51P_6	AG37	
6	IO_L51N_6/VREF_6	AF37	

Table 14: **FF1696 — XC2VP100**

Bank	Pin Description	Pin Number	No Connects
			XC2VP100
6	IO_L52P_6	AF40	
6	IO_L52N_6	AF41	
6	IO_L53P_6	AC36	
6	IO_L53N_6	AC37	
6	IO_L54P_6	AE41	
6	IO_L54N_6	AE42	
6	IO_L55P_6	AE40	
6	IO_L55N_6	AD40	
6	IO_L56P_6	AC31	
6	IO_L56N_6	AC32	
6	IO_L57P_6	AE38	
6	IO_L57N_6/VREF_6	AE39	
6	IO_L58P_6	AD41	
6	IO_L58N_6	AD42	
6	IO_L59P_6	AB35	
6	IO_L59N_6	AB36	
6	IO_L60P_6	AD37	
6	IO_L60N_6	AD38	
6	IO_L85P_6	AC40	
6	IO_L85N_6	AC41	
6	IO_L86P_6	AB33	
6	IO_L86N_6	AB34	
6	IO_L87P_6	AC39	
6	IO_L87N_6/VREF_6	AB39	
6	IO_L88P_6	AB40	
6	IO_L88N_6	AB41	
6	IO_L89P_6	AB31	
6	IO_L89N_6	AB32	
6	IO_L90P_6	AB37	
6	IO_L90N_6	AB38	
7	IO_L90P_7	AA40	
7	IO_L90N_7	AA41	
7	IO_L89P_7	AA35	
7	IO_L89N_7	AA36	
7	IO_L88P_7	Y39	
7	IO_L88N_7/VREF_7	AA39	

Table 14: **FF1696 — XC2VP100**

Bank	Pin Description	Pin Number	No Connects
			XC2VP100
7	IO_L87P_7	AA37	
7	IO_L87N_7	AA38	
7	IO_L86P_7	AA33	
7	IO_L86N_7	AA34	
7	IO_L85P_7	Y40	
7	IO_L85N_7	Y41	
7	IO_L60P_7	W41	
7	IO_L60N_7	W42	
7	IO_L59P_7	AA31	
7	IO_L59N_7	AA32	
7	IO_L58P_7	V40	
7	IO_L58N_7/VREF_7	W40	
7	IO_L57P_7	W37	
7	IO_L57N_7	W38	
7	IO_L56P_7	Y36	
7	IO_L56N_7	Y37	
7	IO_L55P_7	V41	
7	IO_L55N_7	V42	
7	IO_L54P_7	V38	
7	IO_L54N_7	V39	
7	IO_L53P_7	Y31	
7	IO_L53N_7	Y32	
7	IO_L52P_7	U40	
7	IO_L52N_7/VREF_7	U41	
7	IO_L51P_7	T40	
7	IO_L51N_7	U39	
7	IO_L50P_7	Y35	
7	IO_L50N_7	W36	
7	IO_L49P_7	T37	
7	IO_L49N_7	U37	
7	IO_L48P_7	T41	
7	IO_L48N_7	T42	
7	IO_L47P_7	Y33	
7	IO_L47N_7	W34	
7	IO_L46P_7	T38	
7	IO_L46N_7/VREF_7	T39	
7	IO_L45P_7	R36	

Table 14: **FF1696 — XC2VP100**

Bank	Pin Description	Pin Number	No Connects
			XC2VP100
7	IO_L45N_7	T36	
7	IO_L44P_7	W32	
7	IO_L44N_7	W33	
7	IO_L43P_7	R41	
7	IO_L43N_7	R42	
7	IO_L42P_7	P40	
7	IO_L42N_7	R40	
7	IO_L41P_7	V36	
7	IO_L41N_7	V37	
7	IO_L40P_7	R38	
7	IO_L40N_7/VREF_7	R39	
7	IO_L39P_7	P38	
7	IO_L39N_7	R37	
7	IO_L38P_7	V34	
7	IO_L38N_7	V35	
7	IO_L37P_7	P41	
7	IO_L37N_7	P42	
7	IO_L36P_7	P36	
7	IO_L36N_7	P37	
7	IO_L35P_7	V32	
7	IO_L35N_7	V33	
7	IO_L34P_7	M41	
7	IO_L34N_7/VREF_7	N41	
7	IO_L33P_7	N39	
7	IO_L33N_7	N40	
7	IO_L32P_7	U35	
7	IO_L32N_7	U36	
7	IO_L31P_7	N36	
7	IO_L31N_7	N37	
7	IO_L30P_7	M39	
7	IO_L30N_7	M40	
7	IO_L29P_7	U32	
7	IO_L29N_7	U33	
7	IO_L28P_7	M37	
7	IO_L28N_7/VREF_7	M38	
7	IO_L27P_7	L37	
7	IO_L27N_7	M36	

Table 14: **FF1696 — XC2VP100**

Bank	Pin Description	Pin Number	No Connects
			XC2VP100
7	IO_L26P_7	V31	
7	IO_L26N_7	U31	
7	IO_L25P_7	L41	
7	IO_L25N_7	L42	
7	IO_L24P_7	K40	
7	IO_L24N_7	L40	
7	IO_L23P_7	T34	
7	IO_L23N_7	T35	
7	IO_L22P_7	L38	
7	IO_L22N_7/VREF_7	L39	
7	IO_L21P_7	K36	
7	IO_L21N_7	L36	
7	IO_L20P_7	T32	
7	IO_L20N_7	T33	
7	IO_L19P_7	K41	
7	IO_L19N_7	K42	
7	IO_L18P_7	K37	
7	IO_L18N_7	K38	
7	IO_L17P_7	R34	
7	IO_L17N_7	R35	
7	IO_L16P_7	H42	
7	IO_L16N_7/VREF_7	J41	
7	IO_L15P_7	J39	
7	IO_L15N_7	J40	
7	IO_L14P_7	R32	
7	IO_L14N_7	R33	
7	IO_L13P_7	J36	
7	IO_L13N_7	J37	
7	IO_L12P_7	H40	
7	IO_L12N_7	H41	
7	IO_L11P_7	T31	
7	IO_L11N_7	R31	
7	IO_L10P_7	H38	
7	IO_L10N_7/VREF_7	H39	
7	IO_L09P_7	H36	
7	IO_L09N_7	H37	
7	IO_L08P_7	P34	

Table 14: **FF1696 — XC2VP100**

Bank	Pin Description	Pin Number	No Connects
			XC2VP100
7	IO_L08N_7	N35	
7	IO_L07P_7	G41	
7	IO_L07N_7	G42	
7	IO_L72P_7	G39	
7	IO_L72N_7	G40	
7	IO_L71P_7	P32	
7	IO_L71N_7	P33	
7	IO_L70P_7	F38	
7	IO_L70N_7/VREF_7	G38	
7	IO_L69P_7	F37	
7	IO_L69N_7	G37	
7	IO_L68P_7	N32	
7	IO_L68N_7	N33	
7	IO_L67P_7	G35	
7	IO_L67N_7	G36	
7	IO_L66P_7	F41	
7	IO_L66N_7	F42	
7	IO_L65P_7	P31	
7	IO_L65N_7	N31	
7	IO_L64P_7	E41	
7	IO_L64N_7/VREF_7	F40	
7	IO_L63P_7	E36	
7	IO_L63N_7	F36	
7	IO_L62P_7	M34	
7	IO_L62N_7	M35	
7	IO_L61P_7	E35	
7	IO_L61N_7	F35	
7	IO_L84P_7	D40	
7	IO_L84N_7	E40	
7	IO_L83P_7	L34	
7	IO_L83N_7	L35	
7	IO_L82P_7	D39	
7	IO_L82N_7/VREF_7	E39	
7	IO_L81P_7	D38	
7	IO_L81N_7	E37	
7	IO_L80P_7	K34	
7	IO_L80N_7	J35	

Table 14: **FF1696 — XC2VP100**

Bank	Pin Description	Pin Number	No Connects
			XC2VP100
7	IO_L79P_7	D41	
7	IO_L79N_7	D42	
7	IO_L78P_7	C39	
7	IO_L78N_7	C40	
7	IO_L77P_7	H34	
7	IO_L77N_7	H35	
7	IO_L76P_7	C37	
7	IO_L76N_7/VREF_7	D36	
7	IO_L75P_7	B38	
7	IO_L75N_7	C38	
7	IO_L74P_7	F34	
7	IO_L74N_7	G34	
7	IO_L73P_7	C35	
7	IO_L73N_7	C36	
7	IO_L06P_7	A39	
7	IO_L06N_7	B39	
7	IO_L05P_7	D34	
7	IO_L05N_7	D35	
7	IO_L04P_7	A37	
7	IO_L04N_7/VREF_7	B37	
7	IO_L03P_7	A36	
7	IO_L03N_7	B36	
7	IO_L02P_7	B34	
7	IO_L02N_7	C34	
7	IO_L01P_7/VRN_7	A35	
7	IO_L01N_7/VRP_7	B35	
7	VCCO_7	W39	
7	VCCO_7	P39	
7	VCCO_7	K39	
7	VCCO_7	F39	
7	VCCO_7	D37	
7	VCCO_7	W35	
7	VCCO_7	P35	
7	VCCO_7	K35	
7	VCCO_7	M33	
7	VCCO_7	H33	

Table 14: **FF1696 — XC2VP100**

Bank	Pin Description	Pin Number	No Connects
			XC2VP100
7	VCCO_7	AA29	
7	VCCO_7	Y29	
7	VCCO_7	W29	
7	VCCO_7	V29	
7	VCCO_7	U29	
7	VCCO_7	T29	
7	VCCO_7	R29	
7	VCCO_7	AA28	
7	VCCO_7	Y28	
7	VCCO_7	W28	
7	VCCO_7	V28	
7	VCCO_7	U28	
7	VCCO_7	T28	
6	VCCO_6	AU39	
6	VCCO_6	AN39	
6	VCCO_6	AJ39	
6	VCCO_6	AD39	
6	VCCO_6	AW37	
6	VCCO_6	AN35	
6	VCCO_6	AJ35	
6	VCCO_6	AD35	
6	VCCO_6	AR33	
6	VCCO_6	AL33	
6	VCCO_6	AH29	
6	VCCO_6	AG29	
6	VCCO_6	AF29	
6	VCCO_6	AE29	
6	VCCO_6	AD29	
6	VCCO_6	AC29	
6	VCCO_6	AB29	
6	VCCO_6	AG28	
6	VCCO_6	AF28	
6	VCCO_6	AE28	
6	VCCO_6	AD28	
6	VCCO_6	AC28	
6	VCCO_6	AB28	
5	VCCO_5	AW33	

Table 14: **FF1696 — XC2VP100**

Bank	Pin Description	Pin Number	No Connects
			XC2VP100
5	VCCO_5	AL30	
5	VCCO_5	AW29	
5	VCCO_5	AR29	
5	VCCO_5	AJ26	
5	VCCO_5	AW25	
5	VCCO_5	AR25	
5	VCCO_5	AJ25	
5	VCCO_5	AH25	
5	VCCO_5	AJ24	
5	VCCO_5	AH24	
5	VCCO_5	AJ23	
5	VCCO_5	AH23	
5	VCCO_5	AJ22	
5	VCCO_5	AH22	
4	VCCO_4	AJ21	
4	VCCO_4	AH21	
4	VCCO_4	AJ20	
4	VCCO_4	AH20	
4	VCCO_4	AJ19	
4	VCCO_4	AH19	
4	VCCO_4	AW18	
4	VCCO_4	AR18	
4	VCCO_4	AJ18	
4	VCCO_4	AH18	
4	VCCO_4	AJ17	
4	VCCO_4	AW14	
4	VCCO_4	AR14	
4	VCCO_4	AL13	
4	VCCO_4	AW10	
3	VCCO_3	AG15	
3	VCCO_3	AF15	
3	VCCO_3	AE15	
3	VCCO_3	AD15	
3	VCCO_3	AC15	
3	VCCO_3	AB15	
3	VCCO_3	AH14	
3	VCCO_3	AG14	

Table 14: **FF1696 — XC2VP100**

Bank	Pin Description	Pin Number	No Connects
			XC2VP100
3	VCCO_3	AF14	
3	VCCO_3	AE14	
3	VCCO_3	AD14	
3	VCCO_3	AC14	
3	VCCO_3	AB14	
3	VCCO_3	AR10	
3	VCCO_3	AL10	
3	VCCO_3	AN8	
3	VCCO_3	AJ8	
3	VCCO_3	AD8	
3	VCCO_3	AW6	
3	VCCO_3	AU4	
3	VCCO_3	AN4	
3	VCCO_3	AJ4	
3	VCCO_3	AD4	
2	VCCO_2	AA15	
2	VCCO_2	Y15	
2	VCCO_2	W15	
2	VCCO_2	V15	
2	VCCO_2	U15	
2	VCCO_2	T15	
2	VCCO_2	AA14	
2	VCCO_2	Y14	
2	VCCO_2	W14	
2	VCCO_2	V14	
2	VCCO_2	U14	
2	VCCO_2	T14	
2	VCCO_2	R14	
2	VCCO_2	M10	
2	VCCO_2	H10	
2	VCCO_2	W8	
2	VCCO_2	P8	
2	VCCO_2	K8	
2	VCCO_2	D6	
2	VCCO_2	W4	
2	VCCO_2	P4	
2	VCCO_2	K4	

Table 14: **FF1696 — XC2VP100**

Bank	Pin Description	Pin Number	No Connects
			XC2VP100
2	VCCO_2	F4	
1	VCCO_1	R21	
1	VCCO_1	P21	
1	VCCO_1	R20	
1	VCCO_1	P20	
1	VCCO_1	R19	
1	VCCO_1	P19	
1	VCCO_1	R18	
1	VCCO_1	P18	
1	VCCO_1	H18	
1	VCCO_1	D18	
1	VCCO_1	P17	
1	VCCO_1	H14	
1	VCCO_1	D14	
1	VCCO_1	M13	
1	VCCO_1	D10	
0	VCCO_0	D33	
0	VCCO_0	M30	
0	VCCO_0	H29	
0	VCCO_0	D29	
0	VCCO_0	P26	
0	VCCO_0	R25	
0	VCCO_0	P25	
0	VCCO_0	H25	
0	VCCO_0	D25	
0	VCCO_0	R24	
0	VCCO_0	P24	
0	VCCO_0	R23	
0	VCCO_0	P23	
0	VCCO_0	R22	
0	VCCO_0	P22	
N/A	CCLK	AM10	
N/A	PROG_B	J33	
N/A	DONE	AN10	
N/A	M0	AP33	
N/A	M1	AN33	

Table 14: **FF1696 — XC2VP100**

Bank	Pin Description	Pin Number	No Connects
			XC2VP100
N/A	M2	AM33	
N/A	TCK	K10	
N/A	TDI	M32	
N/A	TDO	M11	
N/A	TMS	L10	
N/A	PWRDWN_B	AP10	
N/A	HSWAP_EN	K33	
N/A	RSVD	J10	
N/A	VBATT	M12	
N/A	DXP	M31	
N/A	DXN	L33	
N/A	VCCINT	AK30	
N/A	VCCINT	N30	
N/A	VCCINT	AJ29	
N/A	VCCINT	P29	
N/A	VCCINT	AJ28	
N/A	VCCINT	AH28	
N/A	VCCINT	R28	
N/A	VCCINT	P28	
N/A	VCCINT	AJ27	
N/A	VCCINT	AH27	
N/A	VCCINT	AG27	
N/A	VCCINT	AF27	
N/A	VCCINT	AE27	
N/A	VCCINT	AD27	
N/A	VCCINT	AC27	
N/A	VCCINT	AB27	
N/A	VCCINT	AA27	
N/A	VCCINT	Y27	
N/A	VCCINT	W27	
N/A	VCCINT	V27	
N/A	VCCINT	U27	
N/A	VCCINT	T27	
N/A	VCCINT	R27	
N/A	VCCINT	P27	
N/A	VCCINT	AH26	

Table 14: **FF1696 — XC2VP100**

Bank	Pin Description	Pin Number	No Connects
			XC2VP100
N/A	VCCINT	AG26	
N/A	VCCINT	AF26	
N/A	VCCINT	U26	
N/A	VCCINT	T26	
N/A	VCCINT	R26	
N/A	VCCINT	AG25	
N/A	VCCINT	T25	
N/A	VCCINT	AG24	
N/A	VCCINT	T24	
N/A	VCCINT	AG23	
N/A	VCCINT	T23	
N/A	VCCINT	AG22	
N/A	VCCINT	T22	
N/A	VCCINT	AG21	
N/A	VCCINT	T21	
N/A	VCCINT	AG20	
N/A	VCCINT	T20	
N/A	VCCINT	AG19	
N/A	VCCINT	T19	
N/A	VCCINT	AG18	
N/A	VCCINT	T18	
N/A	VCCINT	AH17	
N/A	VCCINT	AG17	
N/A	VCCINT	AF17	
N/A	VCCINT	U17	
N/A	VCCINT	T17	
N/A	VCCINT	R17	
N/A	VCCINT	AJ16	
N/A	VCCINT	AH16	
N/A	VCCINT	AG16	
N/A	VCCINT	AF16	
N/A	VCCINT	AE16	
N/A	VCCINT	AD16	
N/A	VCCINT	AC16	
N/A	VCCINT	AB16	
N/A	VCCINT	AA16	
N/A	VCCINT	Y16	

Table 14: **FF1696 — XC2VP100**

Bank	Pin Description	Pin Number	No Connects
			XC2VP100
N/A	VCCINT	W16	
N/A	VCCINT	V16	
N/A	VCCINT	U16	
N/A	VCCINT	T16	
N/A	VCCINT	R16	
N/A	VCCINT	P16	
N/A	VCCINT	AJ15	
N/A	VCCINT	AH15	
N/A	VCCINT	R15	
N/A	VCCINT	P15	
N/A	VCCINT	AJ14	
N/A	VCCINT	P14	
N/A	VCCINT	AK13	
N/A	VCCINT	N13	
N/A	VCCAUX	BA42	
N/A	VCCAUX	AY42	
N/A	VCCAUX	AL42	
N/A	VCCAUX	AB42	
N/A	VCCAUX	AA42	
N/A	VCCAUX	M42	
N/A	VCCAUX	C42	
N/A	VCCAUX	B42	
N/A	VCCAUX	BB41	
N/A	VCCAUX	A41	
N/A	VCCAUX	BB40	
N/A	VCCAUX	A40	
N/A	VCCAUX	BB31	
N/A	VCCAUX	A31	
N/A	VCCAUX	BB22	
N/A	VCCAUX	A22	
N/A	VCCAUX	BB21	
N/A	VCCAUX	A21	
N/A	VCCAUX	BB12	
N/A	VCCAUX	A12	
N/A	VCCAUX	BB3	
N/A	VCCAUX	A3	
N/A	VCCAUX	BB2	

Table 14: **FF1696 — XC2VP100**

Bank	Pin Description	Pin Number	No Connects
			XC2VP100
N/A	VCCAUX	A2	
N/A	VCCAUX	BA1	
N/A	VCCAUX	AY1	
N/A	VCCAUX	AL1	
N/A	VCCAUX	AB1	
N/A	VCCAUX	AA1	
N/A	VCCAUX	M1	
N/A	VCCAUX	C1	
N/A	VCCAUX	B1	
N/A	GND	AV42	
N/A	GND	AP42	
N/A	GND	AK42	
N/A	GND	AF42	
N/A	GND	AC42	
N/A	GND	Y42	
N/A	GND	U42	
N/A	GND	N42	
N/A	GND	J42	
N/A	GND	E42	
N/A	GND	BA41	
N/A	GND	AY41	
N/A	GND	C41	
N/A	GND	B41	
N/A	GND	BA40	
N/A	GND	B40	
N/A	GND	BB38	
N/A	GND	AV38	
N/A	GND	AP38	
N/A	GND	AK38	
N/A	GND	AF38	
N/A	GND	AC38	
N/A	GND	Y38	
N/A	GND	U38	
N/A	GND	N38	
N/A	GND	J38	
N/A	GND	E38	
N/A	GND	A38	

Table 14: **FF1696 — XC2VP100**

Bank	Pin Description	Pin Number	No Connects
			XC2VP100
N/A	GND	BB34	
N/A	GND	AV34	
N/A	GND	AP34	
N/A	GND	AK34	
N/A	GND	AF34	
N/A	GND	AC34	
N/A	GND	Y34	
N/A	GND	U34	
N/A	GND	N34	
N/A	GND	J34	
N/A	GND	E34	
N/A	GND	A34	
N/A	GND	AD31	
N/A	GND	W31	
N/A	GND	BB30	
N/A	GND	AV30	
N/A	GND	AP30	
N/A	GND	J30	
N/A	GND	E30	
N/A	GND	A30	
N/A	GND	BB26	
N/A	GND	AV26	
N/A	GND	AP26	
N/A	GND	AE26	
N/A	GND	AD26	
N/A	GND	AC26	
N/A	GND	AB26	
N/A	GND	AA26	
N/A	GND	Y26	
N/A	GND	W26	
N/A	GND	V26	
N/A	GND	J26	
N/A	GND	E26	
N/A	GND	A26	
N/A	GND	AF25	
N/A	GND	AE25	
N/A	GND	AD25	

Table 14: **FF1696 — XC2VP100**

Bank	Pin Description	Pin Number	No Connects
			XC2VP100
N/A	GND	AC25	
N/A	GND	AB25	
N/A	GND	AA25	
N/A	GND	Y25	
N/A	GND	W25	
N/A	GND	V25	
N/A	GND	U25	
N/A	GND	AL24	
N/A	GND	AF24	
N/A	GND	AE24	
N/A	GND	AD24	
N/A	GND	AC24	
N/A	GND	AB24	
N/A	GND	AA24	
N/A	GND	Y24	
N/A	GND	W24	
N/A	GND	V24	
N/A	GND	U24	
N/A	GND	M24	
N/A	GND	BB23	
N/A	GND	AV23	
N/A	GND	AP23	
N/A	GND	AF23	
N/A	GND	AE23	
N/A	GND	AD23	
N/A	GND	AC23	
N/A	GND	AB23	
N/A	GND	AA23	
N/A	GND	Y23	
N/A	GND	W23	
N/A	GND	V23	
N/A	GND	U23	
N/A	GND	J23	
N/A	GND	E23	
N/A	GND	A23	
N/A	GND	AF22	
N/A	GND	AE22	

Table 14: **FF1696 — XC2VP100**

Bank	Pin Description	Pin Number	No Connects
			XC2VP100
N/A	GND	AD22	
N/A	GND	AC22	
N/A	GND	AB22	
N/A	GND	AA22	
N/A	GND	Y22	
N/A	GND	W22	
N/A	GND	V22	
N/A	GND	U22	
N/A	GND	AF21	
N/A	GND	AE21	
N/A	GND	AD21	
N/A	GND	AC21	
N/A	GND	AB21	
N/A	GND	AA21	
N/A	GND	Y21	
N/A	GND	W21	
N/A	GND	V21	
N/A	GND	U21	
N/A	GND	BB20	
N/A	GND	AV20	
N/A	GND	AP20	
N/A	GND	AF20	
N/A	GND	AE20	
N/A	GND	AD20	
N/A	GND	AC20	
N/A	GND	AB20	
N/A	GND	AA20	
N/A	GND	Y20	
N/A	GND	W20	
N/A	GND	V20	
N/A	GND	U20	
N/A	GND	J20	
N/A	GND	E20	
N/A	GND	A20	
N/A	GND	AL19	
N/A	GND	AF19	
N/A	GND	AE19	

Table 14: **FF1696 — XC2VP100**

Bank	Pin Description	Pin Number	No Connects
			XC2VP100
N/A	GND	AD19	
N/A	GND	AC19	
N/A	GND	AB19	
N/A	GND	AA19	
N/A	GND	Y19	
N/A	GND	W19	
N/A	GND	V19	
N/A	GND	U19	
N/A	GND	M19	
N/A	GND	AF18	
N/A	GND	AE18	
N/A	GND	AD18	
N/A	GND	AC18	
N/A	GND	AB18	
N/A	GND	AA18	
N/A	GND	Y18	
N/A	GND	W18	
N/A	GND	V18	
N/A	GND	U18	
N/A	GND	BB17	
N/A	GND	AV17	
N/A	GND	AP17	
N/A	GND	AE17	
N/A	GND	AD17	
N/A	GND	AC17	
N/A	GND	AB17	
N/A	GND	AA17	
N/A	GND	Y17	
N/A	GND	W17	
N/A	GND	V17	
N/A	GND	J17	
N/A	GND	E17	
N/A	GND	A17	
N/A	GND	BB13	
N/A	GND	AV13	
N/A	GND	AP13	
N/A	GND	J13	

Table 14: **FF1696 — XC2VP100**

Bank	Pin Description	Pin Number	No Connects
			XC2VP100
N/A	GND	E13	
N/A	GND	A13	
N/A	GND	AD12	
N/A	GND	W12	
N/A	GND	BB9	
N/A	GND	AV9	
N/A	GND	AP9	
N/A	GND	AK9	
N/A	GND	AF9	
N/A	GND	AC9	
N/A	GND	Y9	
N/A	GND	U9	
N/A	GND	N9	
N/A	GND	J9	
N/A	GND	E9	
N/A	GND	A9	
N/A	GND	BB5	
N/A	GND	AV5	
N/A	GND	AP5	
N/A	GND	AK5	
N/A	GND	AF5	
N/A	GND	AC5	
N/A	GND	Y5	
N/A	GND	U5	
N/A	GND	N5	
N/A	GND	J5	
N/A	GND	E5	
N/A	GND	A5	
N/A	GND	BA3	
N/A	GND	B3	
N/A	GND	BA2	
N/A	GND	AY2	
N/A	GND	C2	
N/A	GND	B2	
N/A	GND	AV1	
N/A	GND	AP1	
N/A	GND	AK1	

Table 14: **FF1696 — XC2VP100**

Bank	Pin Description	Pin Number	No Connects
			XC2VP100
N/A	GND	AF1	
N/A	GND	AC1	
N/A	GND	Y1	
N/A	GND	U1	
N/A	GND	N1	
N/A	GND	J1	
N/A	GND	E1	

Notes:
1. See Table 4 for an explanation of the signals available on this pin.

FF1696 Flip-Chip Fine-Pitch BGA Package Specifications (1.00mm pitch)

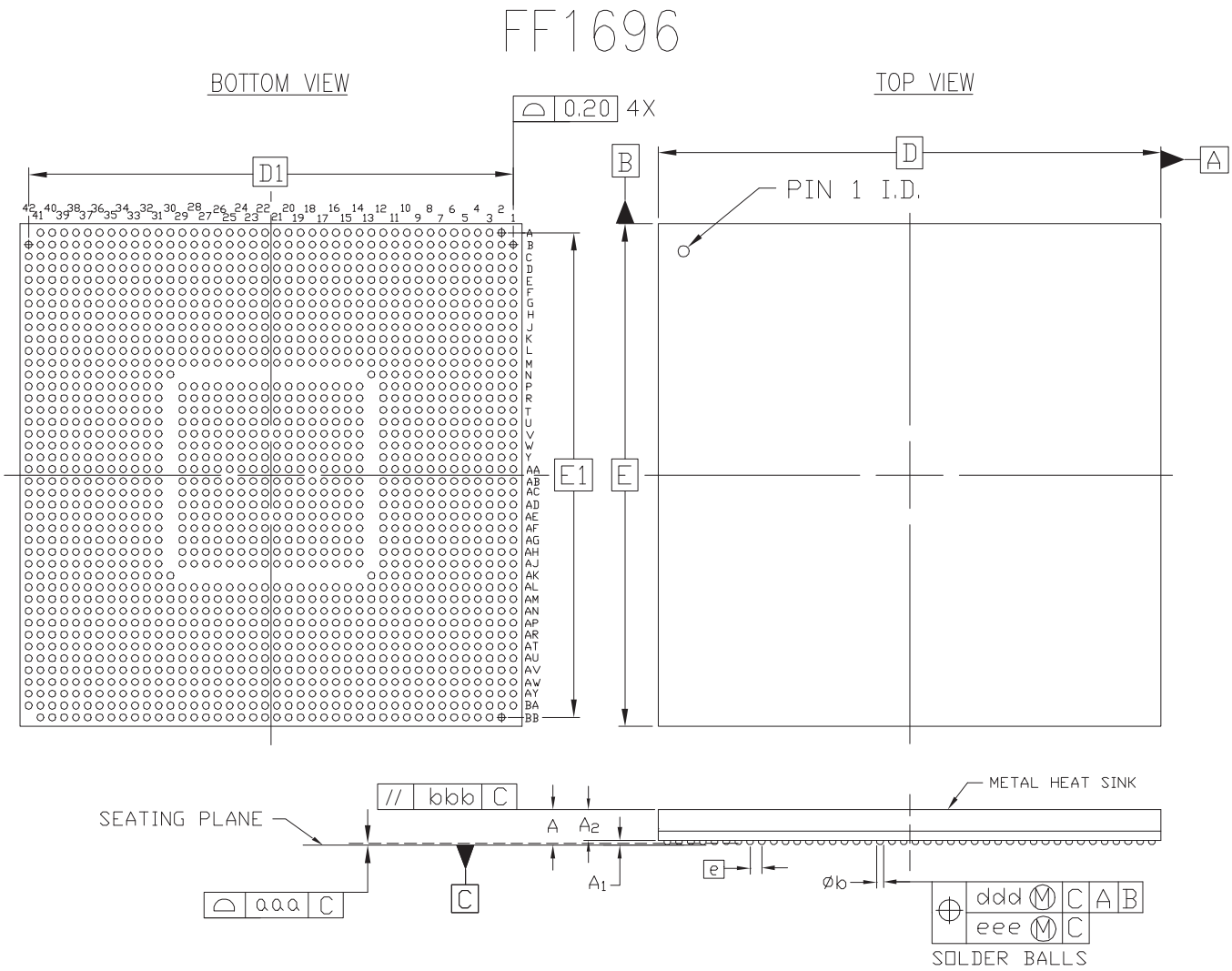

SYMBOL	MILLIMETERS			NOTE
	MIN.	NOM.	MAX.	
A		3.20	3.45	
A_1	0.40	0.50	0.60	
A_2			2.85	
D/E	42.50 BASIC			
D_1/E_1	41.00 REF			
e	1.00 BASIC			
øb	0.50	0.60	0.70	
aaa			0.20	
bbb			0.25	
ddd			0.25	
eee			0.10	
M		42		2

NOTES:

1. ALL DIMENSIONS AND TOLERANCES CONFORM TO ASME Y14.5M–1994
2. SYMBOL "M" IS THE PIN MATRIX SIZE.
3. CONFORMS TO JEDEC MS–034–AAV–1 (DEPOPULATED)

Figure 10: **FF1696 Flip-Chip Fine-Pitch BGA Package Specifications**

Revision History

This section records the change history for this module of the data sheet.

Date	Version	Revision
01/31/02	1.0	Initial Xilinx release.
08/14/02	2.0	Added package and pinout information for new devices.
08/27/02	2.1	• Updated SelectIO-Ultra information in Table 4. (Table deleted in v2.3.) • Corrected direction for RXNPAD and TXPPAD in Table 4 (formerly Table 5).
09/27/02	2.2	Corrected Table 2 and Table 3 entries for XC2VP30, FF1152 package, maximum I/Os from 692 to 644.
11/20/02	2.3	Added Number of Differential Pairs data to Table 3. Removed former Table 4.
12/03/02	2.4	Corrections in Table 4: • Reclassified GCLKx (S/P) pins as Input/Output, since these pins can be used as normal I/Os if not used as clocks. • Added cautionary note to PWRDWN_B pin, indicating that this function is not supported.
01/20/03	2.5	Added and removed package/pinout information for existing devices: • In Table 1, added FG676 package information. • In Table 3, added FG676 package option for XC2VP20, XC2VP30, and XC2VP40. • In Table 12, removed FF1517 package option for XC2VP40. • Added FG676 package pinouts (Table 7) for XC2VP20, XC2VP30, and XC2VP40. • Added package diagram (Figure 3) for FG676 package.
05/19/03	2.5.1	• Added section **BREFCLK Pin Definitions**, page 5. • Added clarification to Table 4 and all device pinout tables regarding the dual-use nature of pins D0/DIN and BUSY/DOUT during configuration.
06/19/03	2.5.3	• Added notation of "open-drain" to TDO pin in Table 4. • The final GND pin in each of six pinout tables was inadvertently deleted in v2.5.1. This revision restores the deleted GND pins as follows: - Pin A1, Table 6, page 16 (FG456) - Pin AF26, Table 7, page 30 (FG676) - Pin AN34, Table 10, page 98 (FF1152) - Pin E1, Table 11, page 130 (FF1148) - Pin C38, Table 12, page 162 (FF1517) - Pin E1, Table 14, page 253 (FF1696)
08/25/03	2.5.5	• Table 4: Deleted Note 2, obsolete. There is only one GNDA pin per MGT. • Table 4: Deleted pins ALT_VRP and ALT_VRN. Not used in Virtex-II Pro FPGAs.
12/10/03	3.0	• XC2VP2 through XC2VP70 speed grades -5, -6, and -7, and XC2VP100 speed grades -5 and -6, are released to **Production status**.
02/19/04	3.1	• Table 4, signal descriptions column: - For signals TDI, TMS, and TCK, added: Pins are 3.3V-compatible. - For signals M2, M1, M0, added: Tie to 3.3V only with 100Ω series resistor. No toggling during or after configuration. - For signal TDO, added: No internal pull-up. External pull-up to 3.3V OK with resistor greater than 200Ω.
03/09/04	3.1.1	• Recompiled for backward compatibility with Acrobat 4 and above. No content changes.
06/30/04	4.0	Merged in DS110-4 (Module 4 of Virtex-II Pro X data sheet). Added data on available Pb-free packages and updated package diagrams for affected devices.

Date	Version	Revision
11/17/04	4.1	• Table 4: Added requirement to V_{BATT} to connect pin to V_{CCAUX} or GND if battery is not used.
03/01/05	4.2	• Table 3: Corrected number of Differential I/O Pairs for XC2VP30-FF1152 from 340 to 316. • Table 4: Changed Direction for User I/O pins (IO_LXXY_#) from “Input/Output” to “Input/Output/Bidirectional”.
06/20/05	4.3	*No changes in Module 4 for this revision.*
09/15/05	4.4	*No changes in Module 4 for this revision.*
10/10/05	4.5	*No changes in Module 4 for this revision.*
03/05/07	4.6	• Figure 2, page 29: Corrected NOTE 3. • Figure 7, page 161: Updated with drawing showing correct heat sink profile and detail.
11/05/07	4.7	Updated copyright notice and legal disclaimer.
06/21/11	5.0	Added *Product Not Recommended for New Designs* banner. Updated Figure 3, page 50, with the newest FG676/FGG676 mechanical drawing.

Notice of Disclaimer

THE XILINX HARDWARE FPGA AND CPLD DEVICES REFERRED TO HEREIN (“PRODUCTS”) ARE SUBJECT TO THE TERMS AND CONDITIONS OF THE XILINX LIMITED WARRANTY WHICH CAN BE VIEWED AT http://www.xilinx.com/warranty.htm. THIS LIMITED WARRANTY DOES NOT EXTEND TO ANY USE OF PRODUCTS IN AN APPLICATION OR ENVIRONMENT THAT IS NOT WITHIN THE SPECIFICATIONS STATED IN THE XILINX DATA SHEET. ALL SPECIFICATIONS ARE SUBJECT TO CHANGE WITHOUT NOTICE. PRODUCTS ARE NOT DESIGNED OR INTENDED TO BE FAIL-SAFE OR FOR USE IN ANY APPLICATION REQUIRING FAIL-SAFE PERFORMANCE, SUCH AS LIFE-SUPPORT OR SAFETY DEVICES OR SYSTEMS, OR ANY OTHER APPLICATION THAT INVOKES THE POTENTIAL RISKS OF DEATH, PERSONAL INJURY, OR PROPERTY OR ENVIRONMENTAL DAMAGE (“CRITICAL APPLICATIONS”). USE OF PRODUCTS IN CRITICAL APPLICATIONS IS AT THE SOLE RISK OF CUSTOMER, SUBJECT TO APPLICABLE LAWS AND REGULATIONS.

Virtex-II Pro Data Sheet

The Virtex-II Pro Data Sheet contains the following modules:

- Virtex-II Pro and Virtex-II Pro X Platform FPGAs: Introduction and Overview (Module 1)
- Virtex-II Pro and Virtex-II Pro X Platform FPGAs: Functional Description (Module 2)
- Virtex-II Pro and Virtex-II Pro X Platform FPGAs: DC and Switching Characteristics (Module 3)
- Virtex-II Pro and Virtex-II Pro X Platform FPGAs: Pinout Information (Module 4)

FPGAMALL
Authorized Distributor

OUR CERTIFICATE

A long-term cooperative relationship can be built between global customers and us by providing excellent products

Business Type	Trading Company, Distributor/Wholesaler
Main Products	Electronic Integrated Circuit
Certifications	ISO9001
Total Annual Revenue	US$2.5 Million - US$5 Million
Country / Region	Hongkong, China
Total Employees	100 - 200 People
Year Established	2018
Main Markets	North America South Asia Western Europe

sales@fpgamall.com
+00852-56428680