FPGAMALL
Authorized Distributor

https://www.fpgamall.com

THE DATASHEET OF FPGA

sales@fpgamall.com
+00852-56428680

XC5204-6TQ144C Xilinx Inc. IC FPGA 117 I/O 144TQFP
Product Obsolete or Under Obsolescence

XC5200 Series Field Programmable Gate Arrays

November 5, 1998 (Version 5.2)

Product Specification

Features

- Low-cost, register/latch rich, SRAM based reprogrammable architecture
  - 0.5µm three-layer metal CMOS process technology
  - 256 to 1936 logic cells (3,000 to 23,000 “gates”)
  - Price competitive with Gate Arrays
- System Level Features
  - System performance beyond 50 MHz
  - 6 levels of interconnect hierarchy
  - VersaRing™ I/O Interface for pin-locking
  - Dedicated carry logic for high-speed arithmetic functions
  - Cascade chain for wide input functions
  - Built-in IEEE 1149.1 JTAG boundary scan test circuitry on all I/O pins
  - Internal 3-state bussing capability
  - Four dedicated low-skew clock or signal distribution nets
- Versatile I/O and Packaging
  - Innovative VersaRing™ I/O interface provides a high logic cell to I/O ratio, with up to 244 I/O signals
  - Programmable output slew-rate control maximizes performance and reduces noise
  - Zero Flip-Flop hold time for input registers simplifies system timing
  - Independent Output Enables for external bussing
  - Footprint compatibility in common packages within the XC5200 Series and with the XC4000 Series
  - Over 150 device/package combinations, including advanced BGA, TQ, and VQ packaging available
- Fully Supported by Xilinx Development System
  - Automatic place and route software
  - Wide selection of PC and Workstation platforms
  - Over 100 3rd-party Alliance interfaces
  - Supported by shrink-wrap Foundation software

Description

The XC5200 Field-Programmable Gate Array Family is engineered to deliver low cost. Building on experiences gained with three previous successful SRAM FPGA families, the XC5200 family brings a robust feature set to programmable logic design. The VersaBlock™ logic module, the VersaRing I/O interface, and a rich hierarchy of interconnect resources combine to enhance design flexibility and reduce time-to-market. Complete support for the XC5200 family is delivered through the familiar Xilinx software environment. The XC5200 family is fully supported on popular workstation and PC platforms. Popular design entry methods are fully supported, including ABEL, schematic capture, VHDL, and Verilog HDL synthesis. Designers utilizing logic synthesis can use their existing tools to design with the XC5200 devices.

Table 1: XC5200 Field-Programmable Gate Array Family Members

Device	XC5202	XC5204	XC5206	XC5210	XC5215
Logic Cells	256	480	784	1,296	1,936
Max Logic Gates	3,000	6,000	10,000	16,000	23,000
Typical Gate Range	2,000 - 3,000	4,000 - 6,000	6,000 - 10,000	10,000 - 16,000	15,000 - 23,000
VersaBlock Array	8 x 8	10 x 12	14 x 14	18 x 18	22 x 22
CLBs	64	120	196	324	484
Flip-Flops	256	480	784	1,296	1,936
I/Os	84	124	148	196	244
TBUFs per Longline	10	14	16	20	24

XC5204-6TQ144C Xilinx Inc. IC FPGA 117 I/O 144TQFP
Product Obsolete or Under Obsolescence

XC5200 Family Compared to XC4000/Spartan™ and XC3000 Series

For readers already familiar with the XC4000/Spartan and XC3000 FPGA Families, this section describes significant differences between them and the XC5200 family. Unless otherwise indicated, comparisons refer to both XC4000/Spartan and XC3000 devices.

Configurable Logic Block (CLB) Resources

Each XC5200 CLB contains four independent 4-input function generators and four registers, which are configured as four independent Logic Cells™ (LCs). The registers in each XC5200 LC are optionally configurable as edge-triggered D-type flip-flops or as transparent level-sensitive latches.

The XC5200 CLB includes dedicated carry logic that provides fast arithmetic carry capability. The dedicated carry logic may also be used to cascade function generators for implementing wide arithmetic functions.

XC4000 family: XC5200 devices have no wide edge decoders. Wide decoders are implemented using cascade logic. Although sacrificing speed for some designs, lack of wide edge decoders reduces the die area and hence cost of the XC5200.

XC4000/Spartan family: XC5200 dedicated carry logic differs from that of the XC4000/Spartan family in that the sum is generated in an additional function generator in the adjacent column. This design reduces XC5200 die size and hence cost for many applications. Note, however, that a loadable up/down counter requires the same number of function generators in both families. XC3000 has no dedicated carry.

XC4000/Spartan family: XC5200 lookup tables are optimized for cost and hence cannot implement RAM.

Input/Output Block (IOB) Resources

The XC5200 family maintains footprint compatibility with the XC4000 family, but not with the XC3000 family.

To minimize cost and maximize the number of I/O per Logic Cell, the XC5200 I/O does not include flip-flops or latches.

For high performance paths, the XC5200 family provides direct connections from each IOB to the registers in the adjacent CLB in order to emulate IOB registers.

Each XC5200 I/O Pin provides a programmable delay element to control input set-up time. This element can be used to avoid potential hold-time problems. Each XC5200 I/O Pin is capable of 8-mA source and sink currents.

IEEE 1149.1-type boundary scan is supported in each XC5200 I/O.

Table 2: Xilinx Field-Programmable Gate Array Families

Parameter	XC5200	Spartan	XC4000	XC3000
CLB function generators	4	3	3	2
CLB inputs	20	9	9	5
CLB outputs	12	4	4	2
Global buffers	4	8	8	2
User RAM	no	yes	yes	no
Edge decoders	no	no	yes	no
Cascade chain	yes	no	no	no
Fast carry logic	yes	yes	yes	no
Internal 3-state	yes	yes	yes	yes
Boundary scan	yes	yes	yes	no
Slew-rate control	yes	yes	yes	yes

Routing Resources

The XC5200 family provides a flexible coupling of logic and local routing resources called the VersaBlock. The XC5200 VersaBlock element includes the CLB, a Local Interconnect Matrix (LIM), and direct connects to neighboring VersaBlocks.

The XC5200 provides four global buffers for clocking or high-fanout control signals. Each buffer may be sourced by means of its dedicated pad or from any internal source.

Each XC5200 TBUF can drive up to two horizontal and two vertical Longlines. There are no internal pull-ups for XC5200 Longlines.

Configuration and Readback

The XC5200 supports a new configuration mode called Express mode.

XC4000/Spartan family: The XC5200 family provides a global reset but not a global set.

XC5200 devices use a different configuration process than that of the XC3000 family, but use the same process as the XC4000 and Spartan families.

XC3000 family: Although their configuration processes differ, XC5200 devices may be used in daisy chains with XC3000 devices.

XC3000 family: The XC5200 PROGRAM pin is a single-function input pin that overrides all other inputs. The PROGRAM pin does not exist in XC3000.

XC5204-6TQ144C Xilinx Inc. IC FPGA 117 I/O 144TQFP
Product Obsolete or Under Obsolescence

XC3000 family: XC5200 devices support an additional programming mode: Peripheral Synchronous.

XC3000 family: The XC5200 family does not support Power-down, but offers a Global 3-state input that does not reset any flip-flops.

XC3000 family: The XC5200 family does not provide an on-chip crystal oscillator amplifier, but it does provide an internal oscillator from which a variety of frequencies up to 12 MHz are available.

Architectural Overview

Figure 1 presents a simplified, conceptual overview of the XC5200 architecture. Similar to conventional FPGAs, the XC5200 family consists of programmable IOBs, programmable logic blocks, and programmable interconnect. Unlike other FPGAs, however, the logic and local routing resources of the XC5200 family are combined in flexible VersaBlocks (Figure 2). General-purpose routing connects to the VersaBlock through the General Routing Matrix (GRM).

VersaBlock: Abundant Local Routing Plus Versatile Logic

The basic logic element in each VersaBlock structure is the Logic Cell, shown in Figure 3. Each LC contains a 4-input function generator (F), a storage device (FD), and control logic. There are five independent inputs and three outputs to each LC. The independence of the inputs and outputs allows the software to maximize the resource utilization within each LC. Each Logic Cell also contains a direct feedthrough path that does not sacrifice the use of either the function generator or the register; this feature is a first for FPGAs. The storage device is configurable as either a D flip-flop or a latch. The control logic consists of carry logic for fast implementation of arithmetic functions, which can also be configured as a cascade chain allowing decode of very wide input functions.

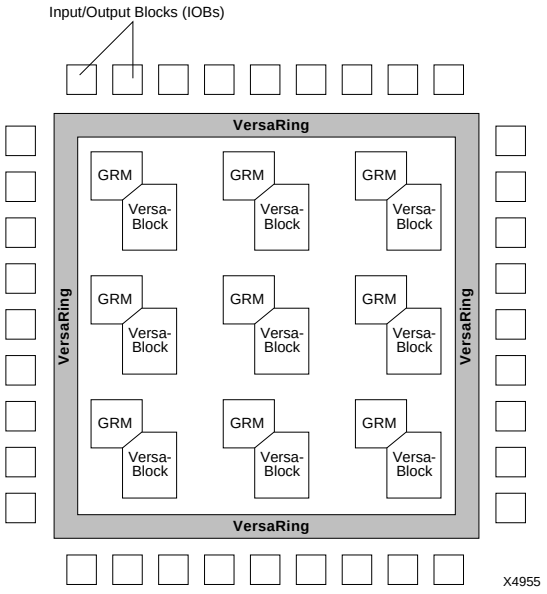

Figure 1: XC5200 Architectural Overview

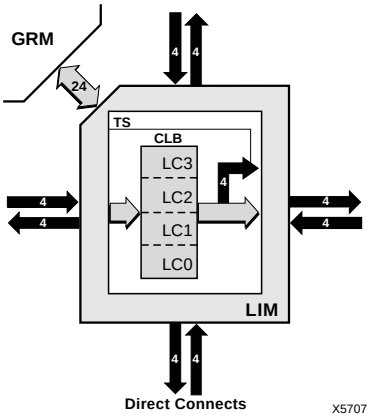

Figure 2: VersaBlock

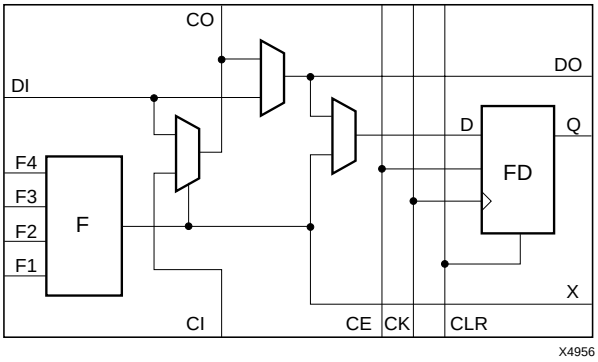

Figure 3: XC5200 Logic Cell (Four LCs per CLB)

XC5204-6TQ144C Xilinx Inc. IC FPGA 117 I/O 144TQFP
Product Obsolete or Under Obsolescence

The XC5200 CLB consists of four LCs, as shown in Figure 4. Each CLB has 20 independent inputs and 12 independent outputs. The top and bottom pairs of LCs can be configured to implement 5-input functions. The challenge of FPGA implementation software has always been to maximize the usage of logic resources. The XC5200 family addresses this issue by surrounding each CLB with two types of local interconnect — the Local Interconnect Matrix (LIM) and direct connects. These two interconnect resources, combined with the CLB, form the VersaBlock, represented in Figure 2.

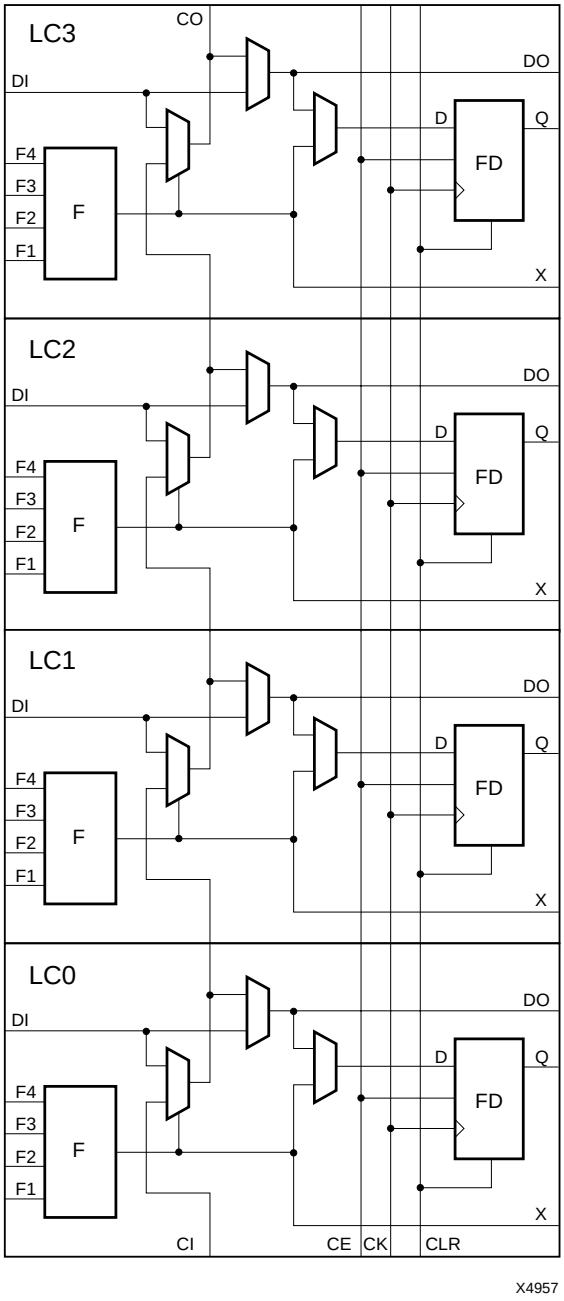

Figure 4: Configurable Logic Block

The LIM provides 100% connectivity of the inputs and outputs of each LC in a given CLB. The benefit of the LIM is that no general routing resources are required to connect feedback paths within a CLB. The LIM connects to the GRM via 24 bidirectional nodes.

The direct connects allow immediate connections to neighboring CLBs, once again without using any of the general interconnect. These two layers of local routing resource improve the granularity of the architecture, effectively making the XC5200 family a “sea of logic cells.” Each Versa-Block has four 3-state buffers that share a common enable line and directly drive horizontal and vertical Longlines, creating robust on-chip bussing capability. The VersaBlock allows fast, local implementation of logic functions, effectively implementing user designs in a hierarchical fashion. These resources also minimize local routing congestion and improve the efficiency of the general interconnect, which is used for connecting larger groups of logic. It is this combination of both fine-grain and coarse-grain architecture attributes that maximize logic utilization in the XC5200 family. This symmetrical structure takes full advantage of the third metal layer, freeing the placement software to pack user logic optimally with minimal routing restrictions.

VersaRing I/O Interface

The interface between the IOBs and core logic has been redesigned in the XC5200 family. The IOBs are completely decoupled from the core logic. The XC5200 IOBs contain dedicated boundary-scan logic for added board-level testability, but do not include input or output registers. This approach allows a maximum number of IOBs to be placed around the device, improving the I/O-to-gate ratio and decreasing the cost per I/O. A “freeway” of interconnect cells surrounding the device forms the VersaRing, which provides connections from the IOBs to the internal logic. These incremental routing resources provide abundant connections from each IOB to the nearest VersaBlock, in addition to Longline connections surrounding the device. The VersaRing eliminates the historic trade-off between high logic utilization and pin placement flexibility. These incremental edge resources give users increased flexibility in preassigning (i.e., locking) I/O pins before completing their logic designs. This ability accelerates time-to-market, since PCBs and other system components can be manufactured concurrent with the logic design.

General Routing Matrix

The GRM is functionally similar to the switch matrices found in other architectures, but it is novel in its tight coupling to the logic resources contained in the VersaBlocks. Advanced simulation tools were used during the development of the XC5200 architecture to determine the optimal level of routing resources required. The XC5200 family contains six levels of interconnect hierarchy — a series of

XC5204-6TQ144C Xilinx Inc. IC FPGA 117 I/O 144TQFP
Product Obsolete or Under Obsolescence

single-length lines, double-length lines, and Longlines all routed through the GRM. The direct connects, LIM, and logic-cell feedthrough are contained within each Versa-Block. Throughout the XC5200 interconnect, an efficient multiplexing scheme, in combination with three layer metal (TLM), was used to improve the overall efficiency of silicon usage.

Performance Overview

The XC5200 family has been benchmarked with many designs running synchronous clock rates beyond 66 MHz. The performance of any design depends on the circuit to be implemented, and the delay through the combinatorial and sequential logic elements, plus the delay in the interconnect routing. A rough estimate of timing can be made by assuming 3-6 ns per logic level, which includes direct-connect routing delays, depending on speed grade. More accurate estimations can be made using the information in the Switching Characteristic Guideline section.

Taking Advantage of Reconfiguration

FPGA devices can be reconfigured to change logic function while resident in the system. This capability gives the system designer a new degree of freedom not available with any other type of logic.

Hardware can be changed as easily as software. Design updates or modifications are easy, and can be made to products already in the field. An FPGA can even be reconfigured dynamically to perform different functions at different times.

Reconfigurable logic can be used to implement system self-diagnostics, create systems capable of being reconfigured for different environments or operations, or implement multi-purpose hardware for a given application. As an added benefit, using reconfigurable FPGA devices simplifies hardware design and debugging and shortens product time-to-market.

Detailed Functional Description

Configurable Logic Blocks (CLBs)

Figure 4 shows the logic in the XC5200 CLB, which consists of four Logic Cells (LC[3:0]). Each Logic Cell consists of an independent 4-input Lookup Table (LUT), and a D-Type flip-flop or latch with common clock, clock enable, and clear, but individually selectable clock polarity. Additional logic features provided in the CLB are:

- An independent 5-input LUT by combining two 4-input LUTs.
- High-speed carry propagate logic.
- High-speed pattern decoding.
- High-speed direct connection to flip-flop D-inputs.
- Individual selection of either a transparent, level-sensitive latch or a D flip-flop.
- Four 3-state buffers with a shared Output Enable.

5-Input Functions

Figure 5 illustrates how the outputs from the LUTs from LC0 and LC1 can be combined with a 2:1 multiplexer (F5_MUX) to provide a 5-input function. The outputs from the LUTs of LC2 and LC3 can be similarly combined.

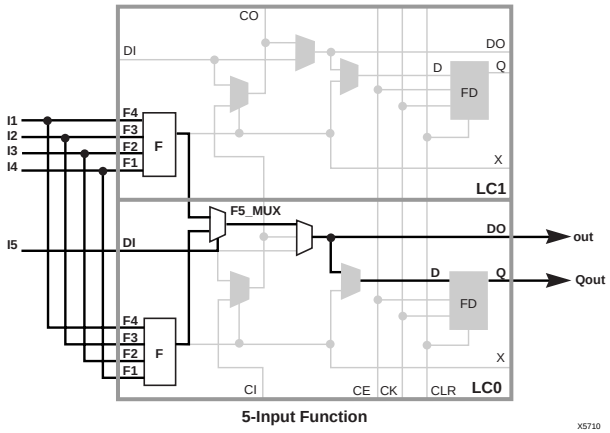

Figure 5: Two LUTs in Parallel Combined to Create a 5-input Function

XC5204-6TQ144C Xilinx Inc. IC FPGA 117 I/O 144TQFP
Product Obsolete or Under Obsolescence

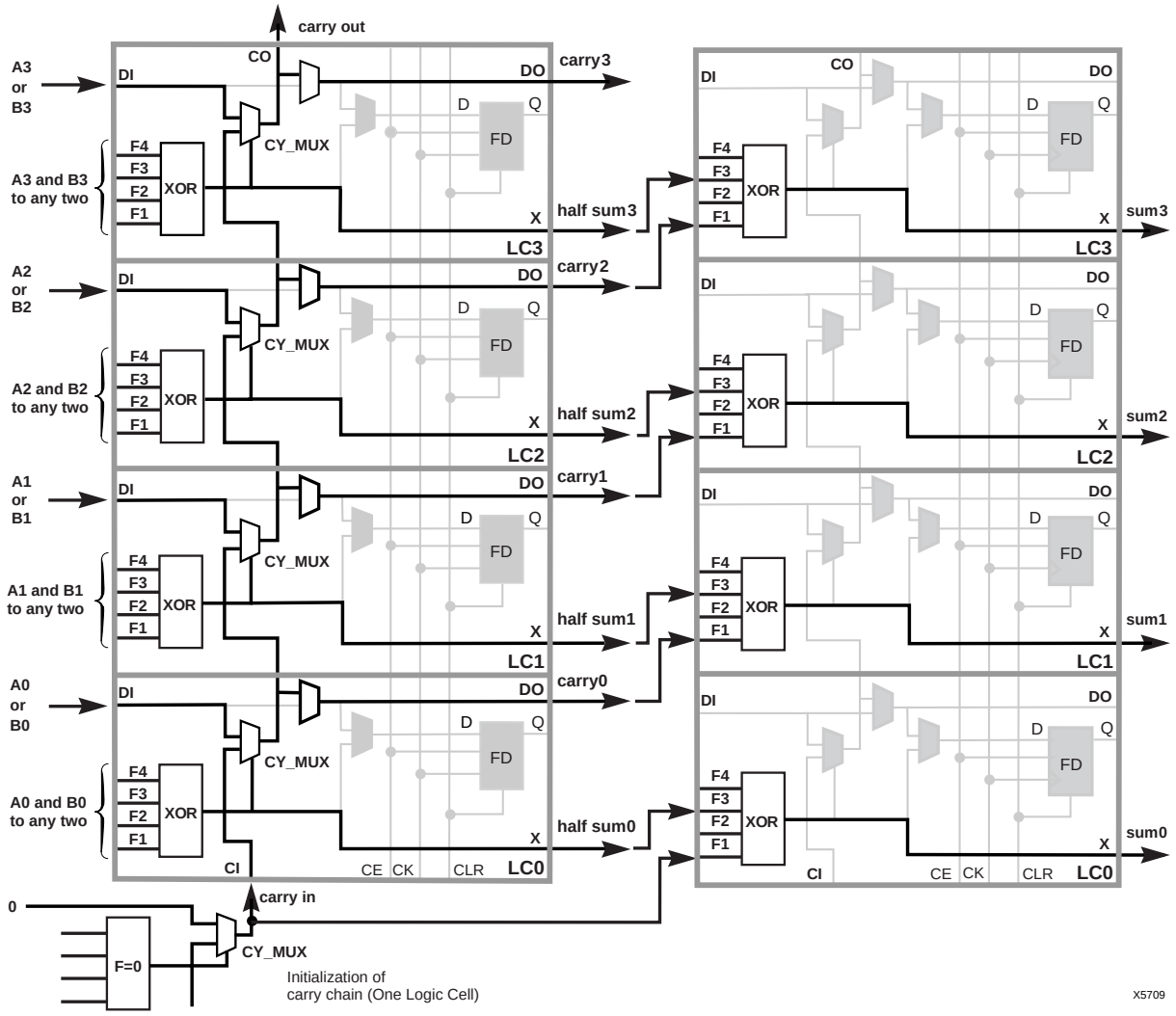

Figure 6: XC5200 CY_MUX Used for Adder Carry Propagate

Carry Function

The XC5200 family supports a carry-logic feature that enhances the performance of arithmetic functions such as counters, adders, etc. A carry multiplexer (CY_MUX) symbol is used to indicate the XC5200 carry logic. This symbol represents the dedicated 2:1 multiplexer in each LC that performs the one-bit high-speed carry propagate per logic cell (four bits per CLB).

While the carry propagate is performed inside the LC, an adjacent LC must be used to complete the arithmetic function. Figure 6 represents an example of an adder function. The carry propagate is performed on the CLB shown, which also generates the half-sum for the four-bit adder. An adjacent CLB is responsible for XORing the half-sum with the corresponding carry-out. Thus an adder or counter requires two LCs per bit. Notice that the carry chain requires an initialization stage, which the XC5200 family accomplishes using the carry initialize (CY_INIT) macro and one additional LC. The carry chain can propagate vertically up a column of CLBs.

The XC5200 library contains a set of Relationally-Placed Macros (RPMs) and arithmetic functions designed to take advantage of the dedicated carry logic. Using and modifying these macros makes it much easier to implement cus-

XC5204-6TQ144C Xilinx Inc. IC FPGA 117 I/O 144TQFP
Product Obsolete or Under Obsolescence

tomized RPMs, freeing the designer from the need to become an expert on architectures.

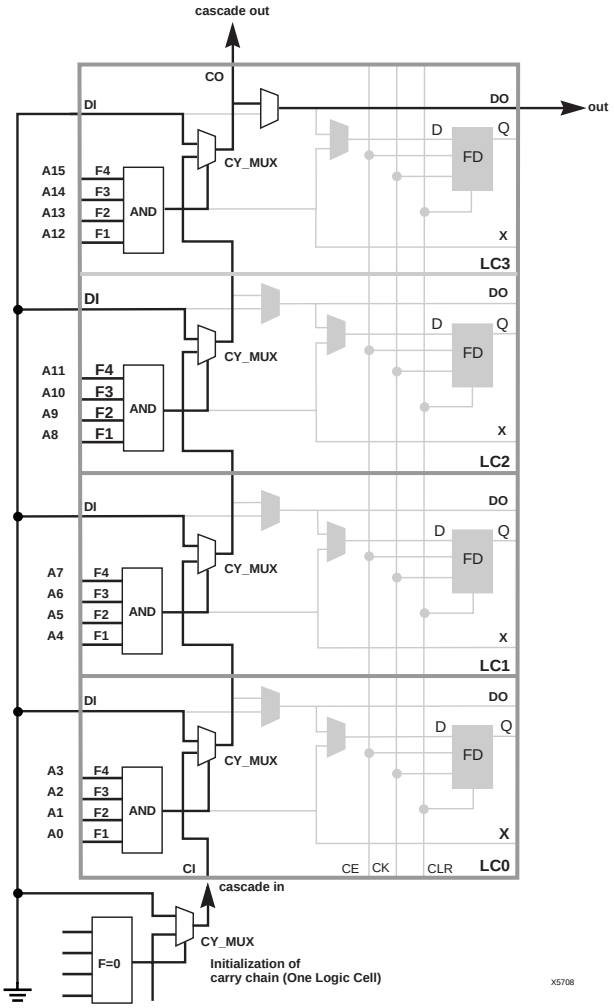

Figure 7: XC5200 CY_MUX Used for Decoder Cascade Logic

Cascade Function

Each CY_MUX can be connected to the CY_MUX in the adjacent LC to provide cascadable decode logic. Figure 7 illustrates how the 4-input function generators can be configured to take advantage of these four cascaded CY_MUXes. Note that AND and OR cascading are specific cases of a general decode. In AND cascading all bits are decoded equal to logic one, while in OR cascading all bits are decoded equal to logic zero. The flexibility of the LUT achieves this result. The XC5200 library contains gate macros designed to take advantage of this function.

CLB Flip-Flops and Latches

The CLB can pass the combinatorial output(s) to the interconnect network, but can also store the combinatorial results or other incoming data in flip-flops, and connect their outputs to the interconnect network as well. The CLB storage elements can also be configured as latches.

Table 3: CLB Storage Element Functionality (active rising edge is shown)

Mode	CK	CE	CLR	D	Q
Power-Up or GR	X	X	X	X	0
Flip-Flop	X	X	1	X	0
	__/	1*	0*	D	D
	0	X	0*	X	Q
Latch	1	1*	0*	X	Q
	0	1*	0*	D	D
Both	X	0	0*	X	Q

Legend:

X	Don't care
__/	Rising edge
0*	Input is Low or unconnected (default value)
1*	Input is High or unconnected (default value)

Data Inputs and Outputs

The source of a storage element data input is programmable. It is driven by the function F, or by the Direct In (DI) block input. The flip-flops or latches drive the Q CLB outputs.

Four fast feed-through paths from DI to DO are available, as shown in Figure 4. This bypass is sometimes used by the automated router to repower internal signals. In addition to the storage element (Q) and direct (DO) outputs, there is a combinatorial output (X) that is always sourced by the Lookup Table.

The four edge-triggered D-type flip-flops or level-sensitive latches have common clock (CK) and clock enable (CE) inputs. Any of the clock inputs can also be permanently enabled. Storage element functionality is described in Table 3.

Clock Input

The flip-flops can be triggered on either the rising or falling clock edge. The clock pin is shared by all four storage elements with individual polarity control. Any inverter placed on the clock input is automatically absorbed into the CLB.

Clock Enable

The clock enable signal (CE) is active High. The CE pin is shared by the four storage elements. If left unconnected for any, the clock enable for that storage element defaults to the active state. CE is not invertible within the CLB.

Clear

An asynchronous storage element input (CLR) can be used to reset all four flip-flops or latches in the CLB. This input

XC5204-6TQ144C Xilinx Inc. IC FPGA 117 I/O 144TQFP
Product Obsolete or Under Obsolescence

can also be independently disabled for any flip-flop. CLR is active High. It is not invertible within the CLB.

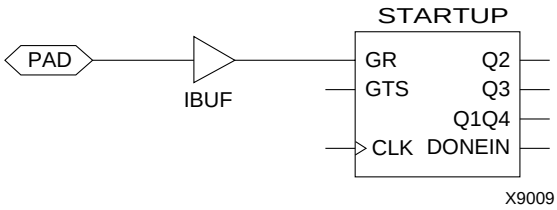

Figure 8: Schematic Symbols for Global Reset

Global Reset

A separate Global Reset line clears each storage element during power-up, reconfiguration, or when a dedicated Reset net is driven active. This global net (GR) does not compete with other routing resources; it uses a dedicated distribution network.

GR can be driven from any user-programmable pin as a global reset input. To use this global net, place an input pad and input buffer in the schematic or HDL code, driving the GR pin of the STARTUP symbol. (See Figure 9.) A specific pin location can be assigned to this input using a LOC attribute or property, just as with any other user-programmable pad. An inverter can optionally be inserted after the input buffer to invert the sense of the Global Reset signal. Alternatively, GR can be driven from any internal node.

Using FPGA Flip-Flops and Latches

The abundance of flip-flops in the XC5200 Series invites pipelined designs. This is a powerful way of increasing performance by breaking the function into smaller subfunctions and executing them in parallel, passing on the results through pipeline flip-flops. This method should be seriously considered wherever throughput is more important than latency.

To include a CLB flip-flop, place the appropriate library symbol. For example, FDCE is a D-type flip-flop with clock enable and asynchronous clear. The corresponding latch symbol is called LDCE.

In XC5200-Series devices, the flip-flops can be used as registers or shift registers without blocking the function generators from performing a different, perhaps unrelated task. This ability increases the functional capacity of the devices.

The CLB setup time is specified between the function generator inputs and the clock input CK. Therefore, the specified CLB flip-flop setup time includes the delay through the function generator.

Three-State Buffers

The XC5200 family has four dedicated Three-State Buffers (TBUFs, or BUFTs in the schematic library) per CLB (see Figure 9). The four buffers are individually configurable through four configuration bits to operate as simple non-inverting buffers or in 3-state mode. When in 3-state mode the CLB output enable (TS) control signal drives the enable to all four buffers. Each TBUF can drive up to two horizontal and/or two vertical Longlines. These 3-state buffers can be used to implement multiplexed or bidirectional buses on the horizontal or vertical longlines, saving logic resources.

The 3-state buffer enable is an active-High 3-state (i.e. an active-Low enable), as shown in Table 4.

Table 4: Three-State Buffer Functionality

IN	T	OUT
X	1	Z
IN	0	IN

Another 3-state buffer with similar access is located near each I/O block along the right and left edges of the array.

The longlines driven by the 3-state buffers have a weak keeper at each end. This circuit prevents undefined floating levels. However, it is overridden by any driver. To ensure the longline goes high when no buffers are on, add an additional BUFT to drive the output High during all of the previously undefined states.

Figure 10 shows how to use the 3-state buffers to implement a multiplexer. The selection is accomplished by the buffer 3-state signal.

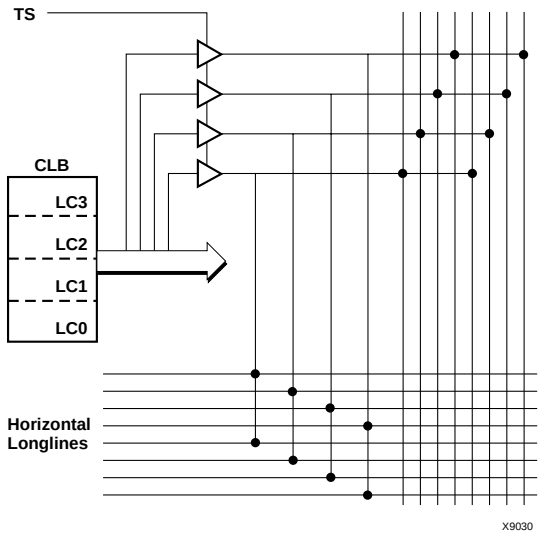

Figure 9: XC5200 3-State Buffers

XC5204-6TQ144C Xilinx Inc. IC FPGA 117 I/O 144TQFP
Product Obsolete or Under Obsolescence

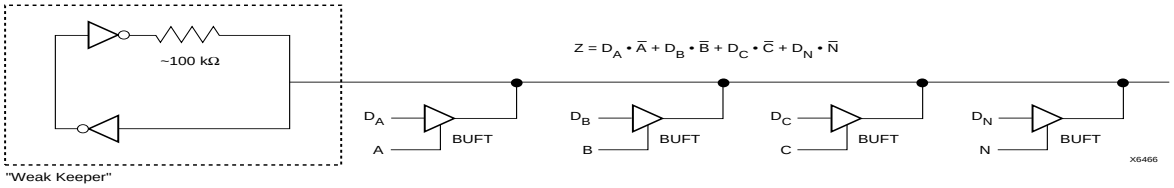

Figure 10: 3-State Buffers Implement a Multiplexer

Input/Output Blocks

User-configurable input/output blocks (IOBs) provide the interface between external package pins and the internal logic. Each IOB controls one package pin and can be configured for input, output, or bidirectional signals.

The I/O block, shown in Figure 11, consists of an input buffer and an output buffer. The output driver is an 8-mA full-rail CMOS buffer with 3-state control. Two slew-rate control modes are supported to minimize bus transients. Both the output buffer and the 3-state control are invertible. The input buffer has globally selected CMOS or TTL input thresholds. The input buffer is invertible and also provides a programmable delay line to assure reliable chip-to-chip set-up and hold times. Minimum ESD protection is 3 KV using the Human Body Model.

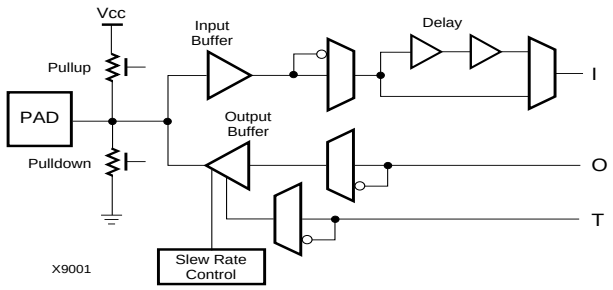

Figure 11: XC5200 I/O Block

IOB Input Signals

The XC5200 inputs can be globally configured for either TTL (1.2V) or CMOS thresholds, using an option in the bitstream generation software. There is a slight hysteresis of about 300mV.

The inputs of XC5200-Series 5-Volt devices can be driven by the outputs of any 3.3-Volt device, if the 5-Volt inputs are in TTL mode.

Supported sources for XC5200-Series device inputs are shown in Table 5.

Table 5: Supported Sources for XC5200-Series Device Inputs

Source	XC5200 Input Mode	
	5 V, TTL	5 V, CMOS
Any device, Vcc = 3.3 V, CMOS outputs	√	Unreliable Data
Any device, Vcc = 5 V, TTL outputs	√	
Any device, Vcc = 5 V, CMOS outputs	√	√

Optional Delay Guarantees Zero Hold Time

XC5200 devices do not have storage elements in the IOBs. However, XC5200 IOBs can be efficiently routed to CLB flip-flops or latches to store the I/O signals.

The data input to the register can optionally be delayed by several nanoseconds. With the delay enabled, the setup time of the input flip-flop is increased so that normal clock routing does not result in a positive hold-time requirement. A positive hold time requirement can lead to unreliable, temperature- or processing-dependent operation.

The input flip-flop setup time is defined between the data measured at the device I/O pin and the clock input at the CLB (not at the clock pin). Any routing delay from the device clock pin to the clock input of the CLB must, therefore, be subtracted from this setup time to arrive at the real setup time requirement relative to the device pins. A short specified setup time might, therefore, result in a negative setup time at the device pins, i.e., a positive hold-time requirement.

When a delay is inserted on the data line, more clock delay can be tolerated without causing a positive hold-time requirement. Sufficient delay eliminates the possibility of a data hold-time requirement at the external pin. The maximum delay is therefore inserted as the software default.

The XC5200 IOB has a one-tap delay element: either the delay is inserted (default), or it is not. The delay guarantees a zero hold time with respect to clocks routed through any of the XC5200 global clock buffers. (See "Global Lines" on page 96 for a description of the global clock buffers in the XC5200.) For a shorter input register setup time, with

XC5204-6TQ144C Xilinx Inc. IC FPGA 117 I/O 144TQFP
Product Obsolete or Under Obsolescence

non-zero hold, attach a NODELAY attribute or property to the flip-flop or input buffer.

IOB Output Signals

Output signals can be optionally inverted within the IOB, and pass directly to the pad. As with the inputs, a CLB flip-flop or latch can be used to store the output signal.

An active-High 3-state signal can be used to place the output buffer in a high-impedance state, implementing 3-state outputs or bidirectional I/O. Under configuration control, the output (OUT) and output 3-state (T) signals can be inverted. The polarity of these signals is independently configured for each IOB.

The XC5200 devices provide a guaranteed output sink current of 8 mA.

Supported destinations for XC5200-Series device outputs are shown in Table 6.(For a detailed discussion of how to interface between 5 V and 3.3 V devices, see the 3V Products section of *The Programmable Logic Data Book*.)

An output can be configured as open-drain (open-collector) by placing an OBUFT symbol in a schematic or HDL code, then tying the 3-state pin (T) to the output signal, and the input pin (I) to Ground. (See Figure 12.)

Table 6: Supported Destinations for XC5200-Series Outputs

Destination	XC5200 Output Mode
	5 V, CMOS
XC5200 device, V_{CC}=3.3 V, CMOS-threshold inputs	√
Any typical device, V_{CC} = 3.3 V, CMOS-threshold inputs	some[1]
Any device, V_{CC} = 5 V, TTL-threshold inputs	√
Any device, V_{CC} = 5 V, CMOS-threshold inputs	√

1. Only if destination device has 5-V tolerant inputs

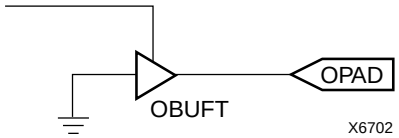

Figure 12: Open-Drain Output

Output Slew Rate

The slew rate of each output buffer is, by default, reduced, to minimize power bus transients when switching non-critical signals. For critical signals, attach a FAST attribute or property to the output buffer or flip-flop.

For XC5200 devices, maximum total capacitive load for simultaneous fast mode switching in the same direction is 200 pF for all package pins between each Power/Ground pin pair. For some XC5200 devices, additional internal Power/Ground pin pairs are connected to special Power and Ground planes within the packages, to reduce ground bounce.

For slew-rate limited outputs this total is two times larger for each device type: 400 pF for XC5200 devices. This maximum capacitive load should not be exceeded, as it can result in ground bounce of greater than 1.5 V amplitude and more than 5 ns duration. This level of ground bounce may cause undesired transient behavior on an output, or in the internal logic. This restriction is common to all high-speed digital ICs, and is not particular to Xilinx or the XC5200 Series.

XC5200-Series devices have a feature called “Soft Start-up,” designed to reduce ground bounce when all outputs are turned on simultaneously at the end of configuration. When the configuration process is finished and the device starts up, the first activation of the outputs is automatically slew-rate limited. Immediately following the initial activation of the I/O, the slew rate of the individual outputs is determined by the individual configuration option for each IOB.

Global Three-State

A separate Global 3-State line (not shown in Figure 11) forces all FPGA outputs to the high-impedance state, unless boundary scan is enabled and is executing an EXTEST instruction. This global net (GTS) does not compete with other routing resources; it uses a dedicated distribution network.

GTS can be driven from any user-programmable pin as a global 3-state input. To use this global net, place an input pad and input buffer in the schematic or HDL code, driving the GTS pin of the STARTUP symbol. A specific pin location can be assigned to this input using a LOC attribute or property, just as with any other user-programmable pad. An inverter can optionally be inserted after the input buffer to invert the sense of the Global 3-State signal. Using GTS is similar to Global Reset. See Figure 8 on page 90 for details. Alternatively, GTS can be driven from any internal node.

Other IOB Options

There are a number of other programmable options in the XC5200-Series IOB.

Pull-up and Pull-down Resistors

Programmable IOB pull-up and pull-down resistors are useful for tying unused pins to Vcc or Ground to minimize power consumption and reduce noise sensitivity. The configurable pull-up resistor is a p-channel transistor that pulls

XC5204-6TQ144C Xilinx Inc. IC FPGA 117 I/O 144TQFP
Product Obsolete or Under Obsolescence

to Vcc. The configurable pull-down resistor is an n-channel transistor that pulls to Ground.

The value of these resistors is 20 kΩ – 100 kΩ. This high value makes them unsuitable as wired-AND pull-up resistors.

The pull-up resistors for most user-programmable IOBs are active during the configuration process. See Table 13 on page 124 for a list of pins with pull-ups active before and during configuration.

After configuration, voltage levels of unused pads, bonded or unbonded, must be valid logic levels, to reduce noise sensitivity and avoid excess current. Therefore, by default, unused pads are configured with the internal pull-up resistor active. Alternatively, they can be individually configured with the pull-down resistor, or as a driven output, or to be driven by an external source. To activate the internal pull-up, attach the PULLUP library component to the net attached to the pad. To activate the internal pull-down, attach the PULLDOWN library component to the net attached to the pad.

JTAG Support

Embedded logic attached to the IOBs contains test structures compatible with IEEE Standard 1149.1 for boundary scan testing, simplifying board-level testing. More information is provided in "Boundary Scan" on page 98.

Oscillator

XC5200 devices include an internal oscillator. This oscillator is used to clock the power-on time-out, clear configuration memory, and source CCLK in Master configuration modes. The oscillator runs at a nominal 12 MHz frequency that varies with process, Vcc, and temperature. The output CCLK frequency is selectable as 1 MHz (default), 6 MHz, or 12 MHz.

The XC5200 oscillator divides the internal 12-MHz clock or a user clock. The user then has the choice of dividing by 4, 16, 64, or 256 for the "OSC1" output and dividing by 2, 8, 32, 128, 1024, 4096, 16384, or 65536 for the "OSC2" output. The division is specified via a "DIVIDEn_BY=x" attribute on the symbol, where n=1 for OSC1, or n=2 for OSC2. These frequencies can vary by as much as -50% or + 50%.

The OSC5 macro is used where an internal oscillator is required. The CK_DIV macro is applicable when a user clock input is specified (see Figure 13).

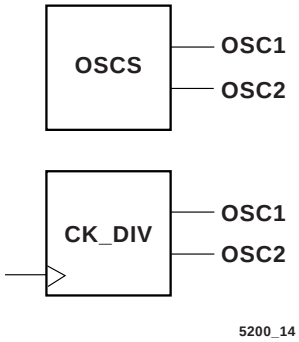

Figure 13: XC5200 Oscillator Macros

VersaBlock Routing

The General Routing Matrix (GRM) connects to the Versa-Block via 24 bidirectional ports (M0-M23). Excluding direct connections, global nets, and 3-statable Longlines, all VersaBlock inputs and outputs connect to the GRM via these 24 ports. Four 3-statable unidirectional signals (TQ0-TQ3) drive out of the VersaBlock directly onto the horizontal and vertical Longlines. Two horizontal global nets and two vertical global nets connect directly to every CLB clock pin; they can connect to other CLB inputs via the GRM. Each CLB also has four unidirectional direct connects to each of its four neighboring CLBs. These direct connects can also feed directly back to the CLB (see Figure 14).

In addition, each CLB has 16 direct inputs, four direct connections from each of the neighboring CLBs. These direct connections provide high-speed local routing that bypasses the GRM.

Local Interconnect Matrix

The Local Interconnect Matrix (LIM) is built from input and output multiplexers. The 13 CLB outputs (12 LC outputs plus a V_{CC}/GND signal) connect to the eight VersaBlock outputs via the output multiplexers, which consist of eight fully populated 13-to-1 multiplexers. Of the eight VersaBlock outputs, four signals drive each neighboring CLB directly, and provide a direct feedback path to the input multiplexers. The four remaining multiplexer outputs can drive the GRM through four TBUFs (TQ0-TQ3). All eight multiplexer outputs can connect to the GRM through the bidirectional M0-M23 signals. All eight signals also connect to the input multiplexers and are potential inputs to that CLB.

XC5204-6TQ144C Xilinx Inc. IC FPGA 117 I/O 144TQFP
Product Obsolete or Under Obsolescence

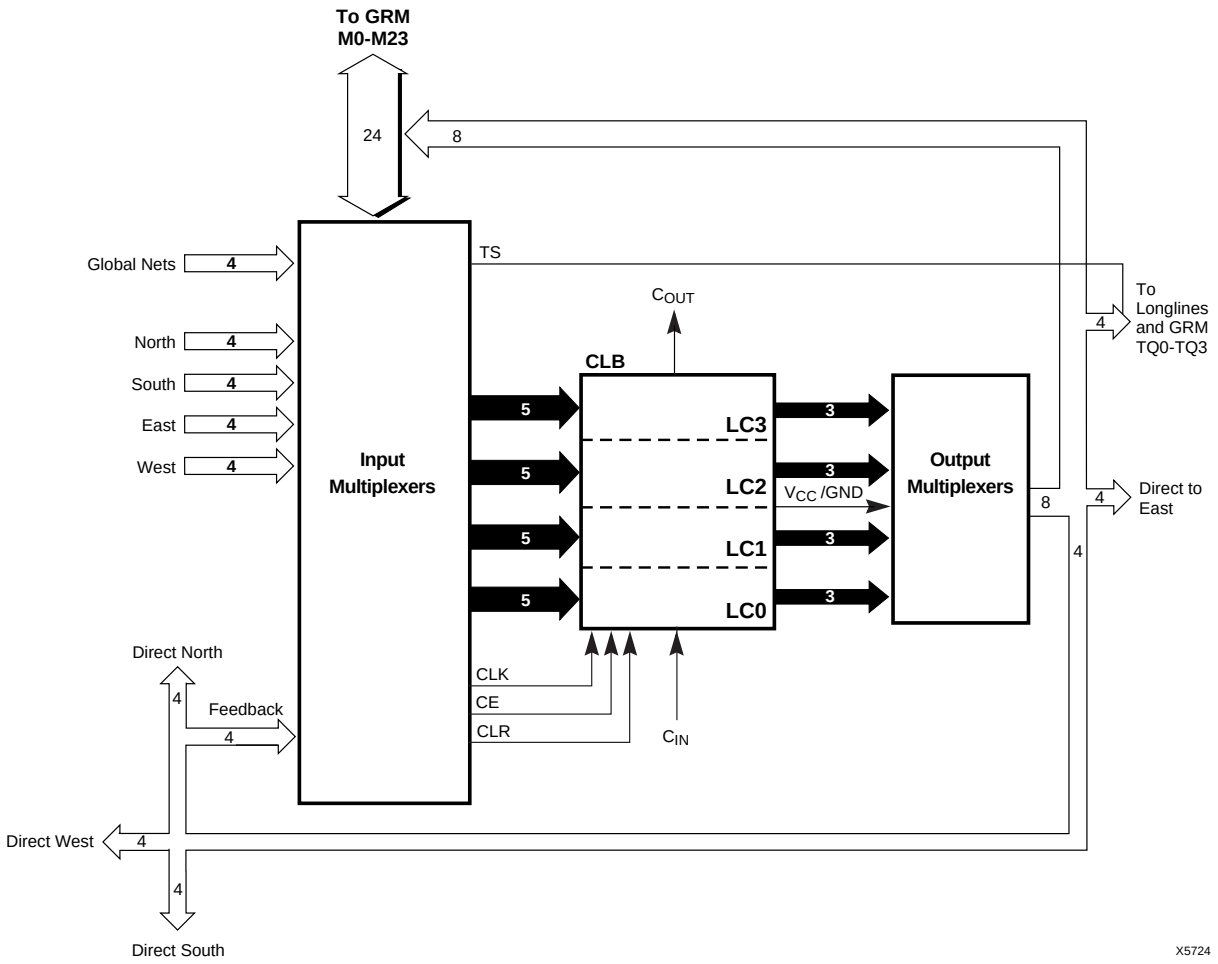

Figure 14: VersaBlock Details

CLB inputs have several possible sources: the 24 signals from the GRM, 16 direct connections from neighboring VersaBlocks, four signals from global, low-skew buffers, and the four signals from the CLB output multiplexers. Unlike the output multiplexers, the input multiplexers are not fully populated; i.e., only a subset of the available signals can be connected to a given CLB input. The flexibility of LUT input swapping and LUT mapping compensates for this limitation. For example, if a 2-input NAND gate is required, it can be mapped into any of the four LUTs, and use any two of the four inputs to the LUT.

Direct Connects

The unidirectional direct-connect segments are connected to the logic input/output pins through the CLB input and output multiplexer arrays, and thus bypass the general routing matrix altogether. These lines increase the routing channel utilization, while simultaneously reducing the delay incurred in speed-critical connections.

The direct connects also provide a high-speed path from the edge CLBs to the VersaRing input/output buffers, and thus reduce pin-to-pin set-up time, clock-to-out, and combinational propagation delay. Direct connects from the input buffers to the CLB DI pin (direct flip-flop input) are only available on the left and right edges of the device. CLB look-up table inputs and combinatorial/registered outputs have direct connects to input/output buffers on all four sides.

The direct connects are ideal for developing customized RPM cells. Using direct connects improves the macro performance, and leaves the other routing channels intact for improved routing. Direct connects can also route through a CLB using one of the four cell-feedthrough paths.

General Routing Matrix

The General Routing Matrix, shown in Figure 15, provides flexible bidirectional connections to the Local Interconnect

XC5204-6TQ144C Xilinx Inc. IC FPGA 117 I/O 144TQFP
Product Obsolete or Under Obsolescence

Matrix through a hierarchy of different-length metal segments in both the horizontal and vertical directions. A pro-

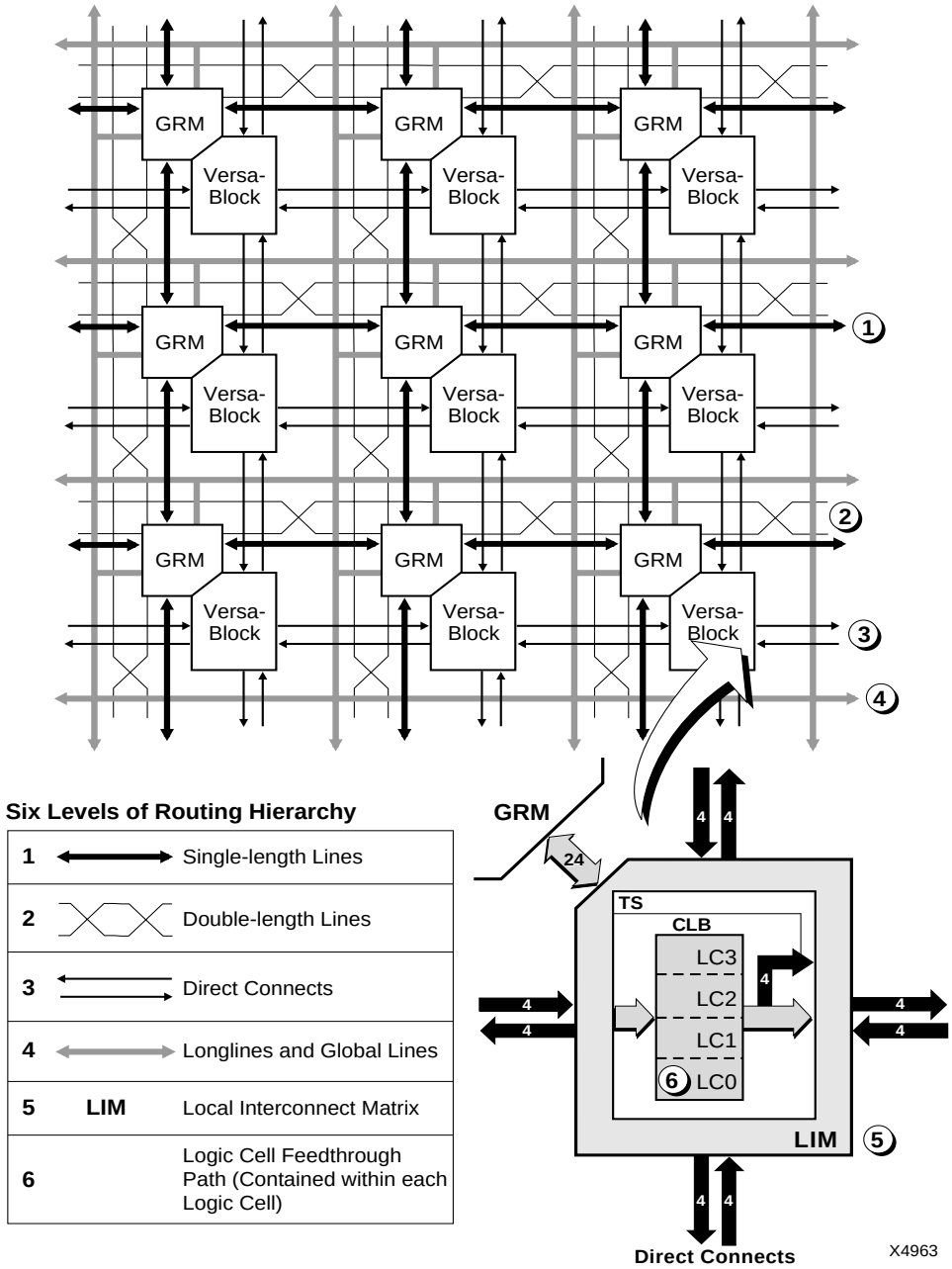

Figure 15: XC5200 Interconnect Structure

grammable interconnect point (PIP) establishes an electrical connection between two wire segments. The PIP, consisting of a pass transistor switch controlled by a memory element, provides bidirectional (in some cases, unidirectional) connection between two adjoining wires. A collection of PIPs inside the General Routing Matrix and in the Local Interconnect Matrix provides connectivity between various types of metal segments. A hierarchy of PIPs and associated routing segments combine to provide a powerful interconnect hierarchy:

- Forty bidirectional single-length segments per CLB provide ten routing channels to each of the four neighboring CLBs in four directions.
- Sixteen bidirectional double-length segments per CLB provide four routing channels to each of four other (non-neighboring) CLBs in four directions.
- Eight horizontal and eight vertical bidirectional Longline

XC5204-6TQ144C Xilinx Inc. IC FPGA 117 I/O 144TQFP
Product Obsolete or Under Obsolescence

segments span the width and height of the chip, respectively.

Two low-skew horizontal and vertical unidirectional global-line segments span each row and column of the chip, respectively.

Single- and Double-Length Lines

The single- and double-length bidirectional line segments make up the bulk of the routing channels. The double-length lines hop across every other CLB to reduce the propagation delays in speed-critical nets. Regenerating the signal strength is recommended after traversing three or four such segments. Xilinx place-and-route software automatically connects buffers in the path of the signal as necessary. Single- and double-length lines cannot drive onto Longlines and global lines; Longlines and global lines can, however, drive onto single- and double-length lines. As a general rule, Longline and global-line connections to the general routing matrix are unidirectional, with the signal direction from these lines toward the routing matrix.

Longlines

Longlines are used for high-fan-out signals, 3-state busses, low-skew nets, and faraway destinations. Row and column splitter PIPs in the middle of the array effectively double the total number of Longlines by electrically dividing them into two separated half-lines. Longlines are driven by the 3-state buffers in each CLB, and are driven by similar buffers at the periphery of the array from the VersaRing I/O Interface.

Bus-oriented designs are easily implemented by using Longlines in conjunction with the 3-state buffers in the CLB and in the VersaRing. Additionally, weak keeper cells at the periphery retain the last valid logic level on the Longlines when all buffers are in 3-state mode.

Longlines connect to the single-length or double-length lines, or to the logic inside the CLB, through the General Routing Matrix. The only manner in which a Longline can be driven is through the four 3-state buffers; therefore, a Longline-to-Longline or single-line-to-Longline connection through PIPs in the General Routing Matrix is not possible. Again, as a general rule, long- and global-line connections to the General Routing Matrix are unidirectional, with the signal direction from these lines toward the routing matrix.

The XC5200 family has no pull-ups on the ends of the Longlines sourced by TBUFs, unlike the XC4000 Series. Consequently, wired functions (i.e., WAND and WORAND) and wide multiplexing functions requiring pull-ups for undefined states (i.e., bus applications) must be implemented in a different way. In the case of the wired functions, the same functionality can be achieved by taking advantage of the carry/cascade logic described above, implementing a wide logic function in place of the wired function. In the case of 3-state bus applications, the user must insure that all states of the multiplexing function are defined. This process is as simple as adding an additional TBUF to drive the bus High when the previously undefined states are activated.

Global Lines

Global buffers in Xilinx FPGAs are special buffers that drive a dedicated routing network called Global Lines, as shown in Figure 16. This network is intended for high-fanout clocks or other control signals, to maximize speed and minimize skewing while distributing the signal to many loads.

The XC5200 family has a total of four global buffers (BUFG symbol in the library), each with its own dedicated routing channel. Two are distributed vertically and two horizontally throughout the FPGA.

The global lines provide direct input only to the CLB clock pins. The global lines also connect to the General Routing Matrix to provide access from these lines to the function generators and other control signals.

Four clock input pads at the corners of the chip, as shown in Figure 16, provide a high-speed, low-skew clock network to each of the four global-line buffers. In addition to the dedicated pad, the global lines can be sourced by internal logic. PIPs from several routing channels within the VersaRing can also be configured to drive the global-line buffers.

Details of all the programmable interconnect for a CLB is shown in Figure 17.

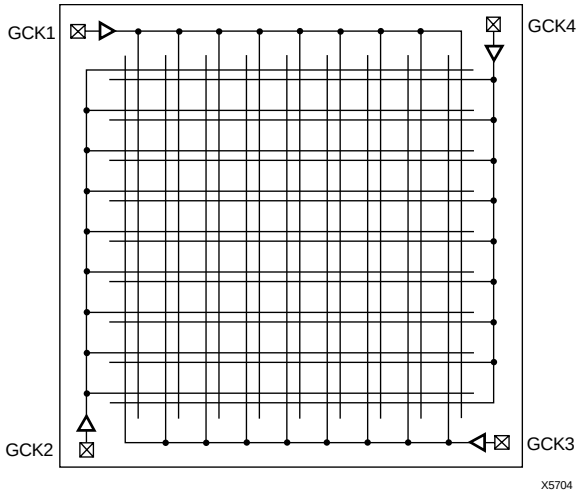

Figure 16: Global Lines

XC5204-6TQ144C Xilinx Inc. IC FPGA 117 I/O 144TQFP
Product Obsolete or Under Obsolescence

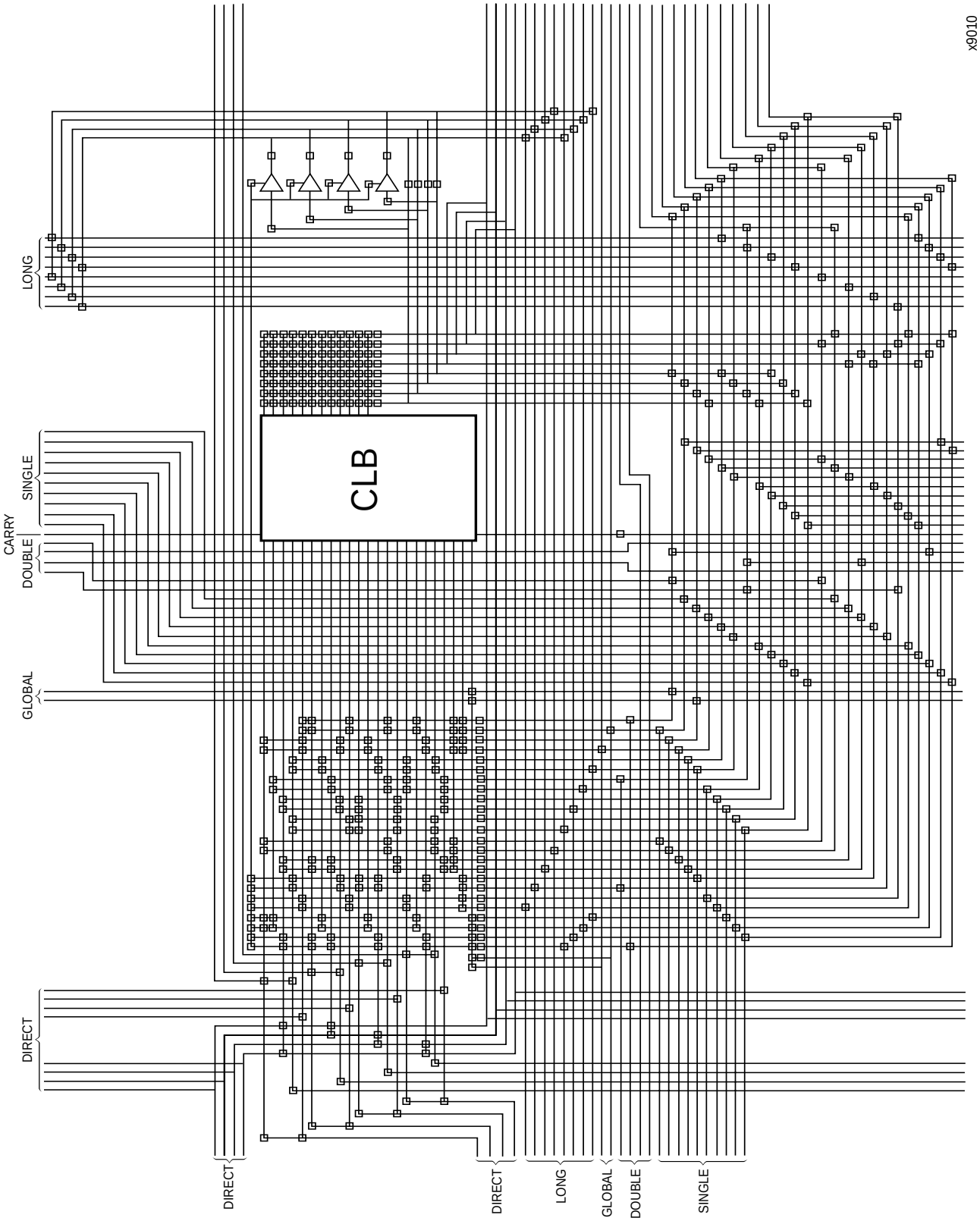

Figure 17: Detail of Programmable Interconnect Associated with XC5200 Series CLB

XC5204-6TQ144C Xilinx Inc. IC FPGA 117 I/O 144TQFP
Product Obsolete or Under Obsolescence

VersaRing Input/Output Interface

The VersaRing, shown in Figure 18, is positioned between the core logic and the pad ring; it has all the routing resources of a VersaBlock without the CLB logic. The VersaRing decouples the core logic from the I/O pads. Each VersaRing Cell provides up to four pad-cell connections on one side, and connects directly to the CLB ports on the other side.

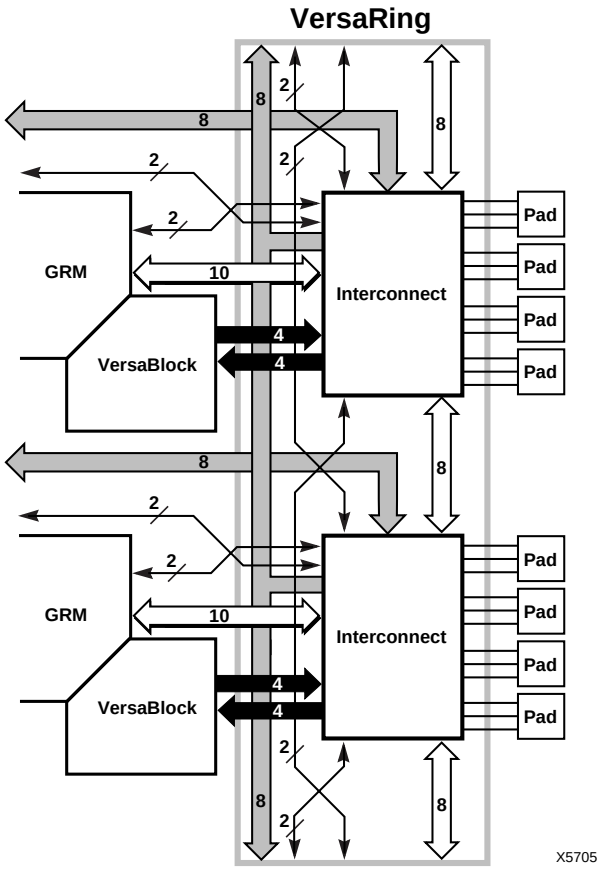

Figure 18: VersaRing I/O Interface

Boundary Scan

The "bed of nails" has been the traditional method of testing electronic assemblies. This approach has become less appropriate, due to closer pin spacing and more sophisticated assembly methods like surface-mount technology and multi-layer boards. The IEEE boundary scan standard 1149.1 was developed to facilitate board-level testing of electronic assemblies. Design and test engineers can imbed a standard test logic structure in their device to achieve high fault coverage for I/O and internal logic. This structure is easily implemented with a four-pin interface on any boundary scan-compatible IC. IEEE 1149.1-compatible devices may be serial daisy-chained together, connected in parallel, or a combination of the two.

XC5200 devices support all the mandatory boundary-scan instructions specified in the IEEE standard 1149.1. A Test Access Port (TAP) and registers are provided that implement the EXTEST, SAMPLE/PRELOAD, and BYPASS instructions. The TAP can also support two USERCODE instructions. When the boundary scan configuration option is selected, three normal user I/O pins become dedicated inputs for these functions. Another user output pin becomes the dedicated boundary scan output.

Boundary-scan operation is independent of individual IOB configuration and package type. All IOBs are treated as independently controlled bidirectional pins, including any unbonded IOBs. Retaining the bidirectional test capability after configuration provides flexibility for interconnect testing.

Also, internal signals can be captured during EXTEST by connecting them to unbonded IOBs, or to the unused outputs in IOBs used as unidirectional input pins. This technique partially compensates for the lack of INTEST support.

The user can serially load commands and data into these devices to control the driving of their outputs and to examine their inputs. This method is an improvement over bed-of-nails testing. It avoids the need to over-drive device outputs, and it reduces the user interface to four pins. An optional fifth pin, a reset for the control logic, is described in the standard but is not implemented in Xilinx devices.

The dedicated on-chip logic implementing the IEEE 1149.1 functions includes a 16-state machine, an instruction register and a number of data registers. The functional details can be found in the IEEE 1149.1 specification and are also discussed in the Xilinx application note XAPP 017: *"Boundary Scan in XC4000 and XC5200 Series devices"*

Figure 19 on page 99 is a diagram of the XC5200-Series boundary scan logic. It includes three bits of Data Register per IOB, the IEEE 1149.1 Test Access Port controller, and the Instruction Register with decodes.

The public boundary-scan instructions are always available prior to configuration. After configuration, the public instructions and any USERCODE instructions are only available if specified in the design. While SAMPLE and BYPASS are available during configuration, it is recommended that boundary-scan operations not be performed during this transitory period.

In addition to the test instructions outlined above, the boundary-scan circuitry can be used to configure the FPGA device, and to read back the configuration data.

All of the XC4000 boundary-scan modes are supported in the XC5200 family. Three additional outputs for the User-Register are provided (Reset, Update, and Shift), repre-

XC5204-6TQ144C Xilinx Inc. IC FPGA 117 I/O 144TQFP
Product Obsolete or Under Obsolescence

senting the decoding of the corresponding state of the boundary-scan internal state machine.

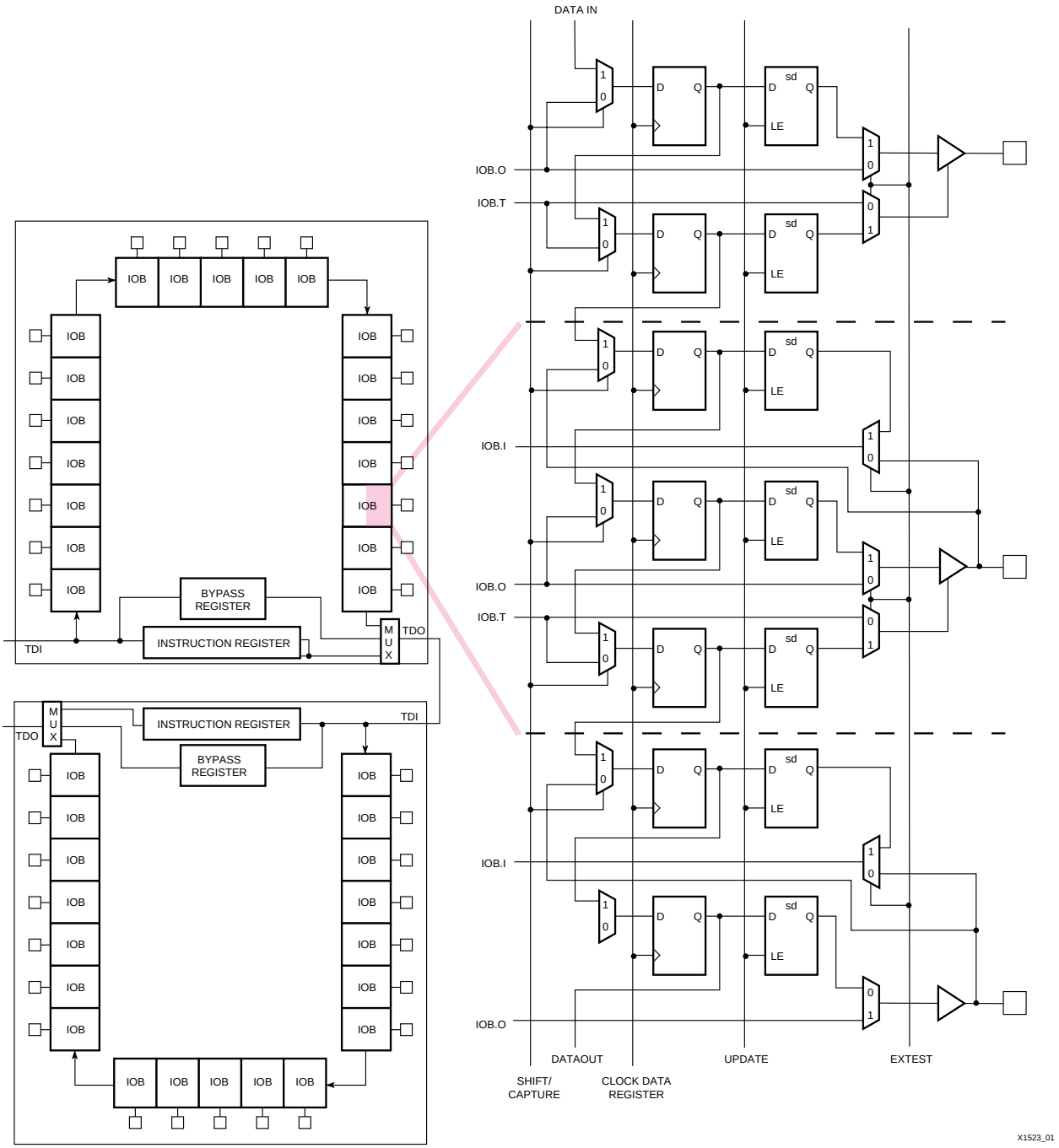

Figure 19: XC5200-Series Boundary Scan Logic

XC5204-6TQ144C Xilinx Inc. IC FPGA 117 I/O 144TQFP
Product Obsolete or Under Obsolescence

XC5200-Series devices can also be configured through the boundary scan logic. See XAPP 017 for more information.

Data Registers

The primary data register is the boundary scan register. For each IOB pin in the FPGA, bonded or not, it includes three bits for In, Out and 3-State Control. Non-IOB pins have appropriate partial bit population for In or Out only. PROGRAM, CCLK and DONE are not included in the boundary scan register. Each EXTEST CAPTURE-DR state captures all In, Out, and 3-State pins.

The data register also includes the following non-pin bits: TDO.T, and TDO.O, which are always bits 0 and 1 of the data register, respectively, and BSCANT.UPD, which is always the last bit of the data register. These three boundary scan bits are special-purpose Xilinx test signals.

The other standard data register is the single flip-flop BYPASS register. It synchronizes data being passed through the FPGA to the next downstream boundary scan device.

The FPGA provides two additional data registers that can be specified using the BSCAN macro. The FPGA provides two user pins (BSCAN.SEL1 and BSCAN.SEL2) which are the decodes of two user instructions, USER1 and USER2. For these instructions, two corresponding pins (BSCAN.TDO1 and BSCAN.TDO2) allow user scan data to be shifted out on TDO. The data register clock (BSCAN.DRCK) is available for control of test logic which the user may wish to implement with CLBs. The NAND of TCK and RUN-TEST-IDLE is also provided (BSCAN.IDLE).

Instruction Set

The XC5200-Series boundary scan instruction set also includes instructions to configure the device and read back the configuration data. The instruction set is coded as shown in Table 7.

Table 7: Boundary Scan Instructions

Instruction I2	I1	I0	Test Selected	TDO Source	I/O Data Source
0	0	0	EXTEST	DR	DR
0	0	1	SAMPLE/PRELOAD	DR	Pin/Logic
0	1	0	USER 1	BSCAN. TDO1	User Logic
0	1	1	USER 2	BSCAN. TDO2	User Logic
1	0	0	READBACK	Readback Data	Pin/Logic
1	0	1	CONFIGURE	DOUT	Disabled
1	1	0	Reserved	—	—
1	1	1	BYPASS	Bypass Register	—

Bit Sequence

The bit sequence within each IOB is: 3-State, Out, In. The data-register cells for the TAP pins TMS, TCK, and TDI have an OR-gate that permanently disables the output buffer if boundary-scan operation is selected. Consequently, it is impossible for the outputs in IOBs used by TAP inputs to conflict with TAP operation. TAP data is taken directly from the pin, and cannot be overwritten by injected boundary-scan data.

The primary global clock inputs (PGCK1-PGCK4) are taken directly from the pins, and cannot be overwritten with boundary-scan data. However, if necessary, it is possible to drive the clock input from boundary scan. The external clock source is 3-stated, and the clock net is driven with boundary scan data through the output driver in the clock-pad IOB. If the clock-pad IOBs are used for non-clock signals, the data may be overwritten normally.

Pull-up and pull-down resistors remain active during boundary scan. Before and during configuration, all pins are pulled up. After configuration, the choice of internal pull-up or pull-down resistor must be taken into account when designing test vectors to detect open-circuit PC traces.

From a cavity-up view of the chip (as shown in XDE or Epic), starting in the upper right chip corner, the boundary scan data-register bits are ordered as shown in Table 8. The device-specific pinout tables for the XC5200 Series include the boundary scan locations for each IOB pin.

Table 8: Boundary Scan Bit Sequence

Bit Position	I/O Pad Location
Bit 0 (TDO)	Top-edge I/O pads (right to left)
Bit 1	...
...	Left-edge I/O pads (top to bottom)
...	Bottom-edge I/O pads (left to right)
...	Right-edge I/O pads (bottom to top)
Bit N (TDI)	BSCANT.UPD

BSDL (Boundary Scan Description Language) files for XC5200-Series devices are available on the Xilinx web site in the File Download area.

Including Boundary Scan

If boundary scan is only to be used during configuration, no special elements need be included in the schematic or HDL code. In this case, the special boundary scan pins TDI, TMS, TCK and TDO can be used for user functions after configuration.

To indicate that boundary scan remain enabled after configuration, include the BSCAN library symbol and connect pad symbols to the TDI, TMS, TCK and TDO pins, as shown in Figure 20.

XC5204-6TQ144C Xilinx Inc. IC FPGA 117 I/O 144TQFP
Product Obsolete or Under Obsolescence

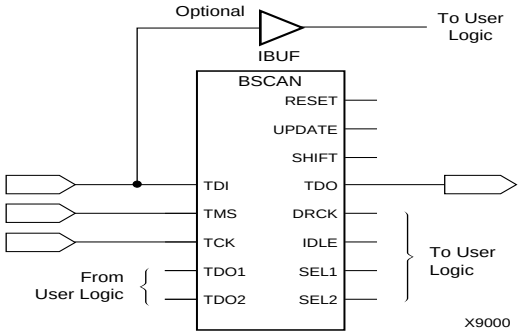

Figure 20: Boundary Scan Schematic Example

Even if the boundary scan symbol is used in a schematic, the input pins TMS, TCK, and TDI can still be used as inputs to be routed to internal logic. Care must be taken not to force the chip into an undesired boundary scan state by inadvertently applying boundary scan input patterns to these pins. The simplest way to prevent this is to keep TMS High, and then apply whatever signal is desired to TDI and TCK.

Avoiding Inadvertent Boundary Scan

If TMS or TCK is used as user I/O, care must be taken to ensure that at least one of these pins is held constant during configuration. In some applications, a situation may occur where TMS or TCK is driven during configuration. This may cause the device to go into boundary scan mode and disrupt the configuration process.

To prevent activation of boundary scan during configuration, do either of the following:

- TMS: Tie High to put the Test Access Port controller in a benign RESET state
- TCK: Tie High or Low—do not toggle this clock input.

For more information regarding boundary scan, refer to the Xilinx Application Note XAPP 017, "*Boundary Scan in XC4000 and XC5200 Devices*."

Power Distribution

Power for the FPGA is distributed through a grid to achieve high noise immunity and isolation between logic and I/O. Inside the FPGA, a dedicated Vcc and Ground ring surrounding the logic array provides power to the I/O drivers, as shown in Figure 21. An independent matrix of Vcc and Ground lines supplies the interior logic of the device.

This power distribution grid provides a stable supply and ground for all internal logic, providing the external package power pins are all connected and appropriately decoupled.

Typically, a 0.1 µF capacitor connected near the Vcc and Ground pins of the package will provide adequate decoupling.

Output buffers capable of driving/sinking the specified 8 mA loads under specified worst-case conditions may be capable of driving/sinking up to 10 times as much current under best case conditions.

Noise can be reduced by minimizing external load capacitance and reducing simultaneous output transitions in the same direction. It may also be beneficial to locate heavily loaded output buffers near the Ground pads. The I/O Block output buffers have a slew-rate limited mode (default) which should be used where output rise and fall times are not speed-critical.

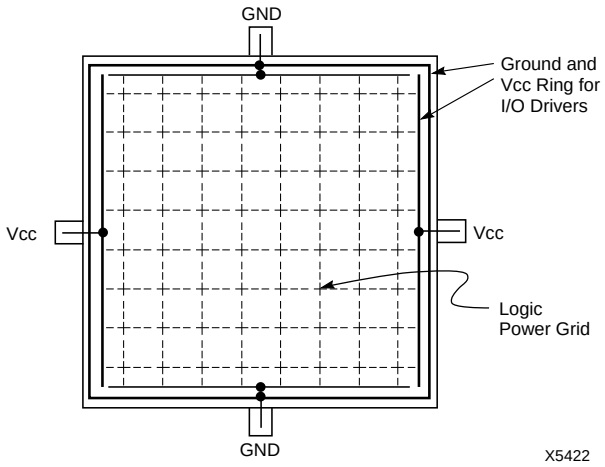

Figure 21: XC5200-Series Power Distribution

Pin Descriptions

There are three types of pins in the XC5200-Series devices:

- Permanently dedicated pins
- User I/O pins that can have special functions
- Unrestricted user-programmable I/O pins.

Before and during configuration, all outputs not used for the configuration process are 3-stated and pulled high with a 20 kΩ - 100 kΩ pull-up resistor.

After configuration, if an IOB is unused it is configured as an input with a 20 kΩ - 100 kΩ pull-up resistor.

Device pins for XC5200-Series devices are described in Table 9. Pin functions during configuration for each of the seven configuration modes are summarized in "Pin Func-

XC5204-6TQ144C Xilinx Inc. IC FPGA 117 I/O 144TQFP
Product Obsolete or Under Obsolescence

tions During Configuration" on page 124, in the "Configuration Timing" section.

Table 9: Pin Descriptions

Pin Name	I/O During Config.	I/O After Config.	Pin Description
Permanently Dedicated Pins			
VCC	I	I	Five or more (depending on package) connections to the nominal +5 V supply voltage. All must be connected, and each must be decoupled with a 0.01 - 0.1 µF capacitor to Ground.
GND	I	I	Four or more (depending on package type) connections to Ground. All must be connected.
CCLK	I or O	I	During configuration, Configuration Clock (CCLK) is an output in Master modes or Asynchronous Peripheral mode, but is an input in Slave mode, Synchronous Peripheral mode, and Express mode. After configuration, CCLK has a weak pull-up resistor and can be selected as the Readback Clock. There is no CCLK High time restriction on XC5200-Series devices, except during Readback. See "Violating the Maximum High and Low Time Specification for the Readback Clock" on page 113 for an explanation of this exception.
DONE	I/O	O	DONE is a bidirectional signal with an optional internal pull-up resistor. As an output, it indicates the completion of the configuration process. As an input, a Low level on DONE can be configured to delay the global logic initialization and the enabling of outputs. The exact timing, the clock source for the Low-to-High transition, and the optional pull-up resistor are selected as options in the program that creates the configuration bitstream. The resistor is included by default.
$\overline{\text{PROGRAM}}$	I	I	$\overline{\text{PROGRAM}}$ is an active Low input that forces the FPGA to clear its configuration memory. It is used to initiate a configuration cycle. When $\overline{\text{PROGRAM}}$ goes High, the FPGA executes a complete clear cycle, before it goes into a WAIT state and releases $\overline{\text{INIT}}$. The $\overline{\text{PROGRAM}}$ pin has an optional weak pull-up after configuration.
User I/O Pins That Can Have Special Functions			
RDY/$\overline{\text{BUSY}}$	O	I/O	During Peripheral mode configuration, this pin indicates when it is appropriate to write another byte of data into the FPGA. The same status is also available on D7 in Asynchronous Peripheral mode, if a read operation is performed when the device is selected. After configuration, RDY/$\overline{\text{BUSY}}$ is a user-programmable I/O pin. RDY/$\overline{\text{BUSY}}$ is pulled High with a high-impedance pull-up prior to $\overline{\text{INIT}}$ going High.
$\overline{\text{RCLK}}$	O	I/O	During Master Parallel configuration, each change on the A0-A17 outputs is preceded by a rising edge on $\overline{\text{RCLK}}$, a redundant output signal. $\overline{\text{RCLK}}$ is useful for clocked PROMs. It is rarely used during configuration. After configuration, $\overline{\text{RCLK}}$ is a user-programmable I/O pin.
M0, M1, M2	I	I/O	As Mode inputs, these pins are sampled before the start of configuration to determine the configuration mode to be used. After configuration, M0, M1, and M2 become user-programmable I/O. During configuration, these pins have weak pull-up resistors. For the most popular configuration mode, Slave Serial, the mode pins can thus be left unconnected. A pull-down resistor value of 3.3 kΩ is recommended for other modes.
TDO	O	O	If boundary scan is used, this pin is the Test Data Output. If boundary scan is not used, this pin is a 3-state output, after configuration is completed. This pin can be user output only when called out by special schematic definitions. To use this pin, place the library component TDO instead of the usual pad symbol. An output buffer must still be used.

XC5204-6TQ144C Xilinx Inc. IC FPGA 117 I/O 144TQFP
Product Obsolete or Under Obsolescence

Table 9: Pin Descriptions (Continued)

Pin Name	I/O During Config.	I/O After Config.	Pin Description
TDI, TCK, TMS	I	I/O or I (JTAG)	If boundary scan is used, these pins are Test Data In, Test Clock, and Test Mode Select inputs respectively. They come directly from the pads, bypassing the IOBs. These pins can also be used as inputs to the CLB logic after configuration is completed. If the BSCAN symbol is not placed in the design, all boundary scan functions are inhibited once configuration is completed, and these pins become user-programmable I/O. In this case, they must be called out by special schematic definitions. To use these pins, place the library components TDI, TCK, and TMS instead of the usual pad symbols. Input or output buffers must still be used.
HDC	O	I/O	High During Configuration (HDC) is driven High until the I/O go active. It is available as a control output indicating that configuration is not yet completed. After configuration, HDC is a user-programmable I/O pin.
$\overline{\text{LDC}}$	O	I/O	Low During Configuration ($\overline{\text{LDC}}$) is driven Low until the I/O go active. It is available as a control output indicating that configuration is not yet completed. After configuration, $\overline{\text{LDC}}$ is a user-programmable I/O pin.
$\overline{\text{INIT}}$	I/O	I/O	Before and during configuration, $\overline{\text{INIT}}$ is a bidirectional signal. A 1 kΩ - 10 kΩ external pull-up resistor is recommended. As an active-Low open-drain output, $\overline{\text{INIT}}$ is held Low during the power stabilization and internal clearing of the configuration memory. As an active-Low input, it can be used to hold the FPGA in the internal WAIT state before the start of configuration. Master mode devices stay in a WAIT state an additional 50 to 250 µs after $\overline{\text{INIT}}$ has gone High. During configuration, a Low on this output indicates that a configuration data error has occurred. After the I/O go active, $\overline{\text{INIT}}$ is a user-programmable I/O pin.
GCK1 - GCK4	Weak Pull-up	I or I/O	Four Global inputs each drive a dedicated internal global net with short delay and minimal skew. These internal global nets can also be driven from internal logic. If not used to drive a global net, any of these pins is a user-programmable I/O pin. The GCK1-GCK4 pins provide the shortest path to the four Global Buffers. Any input pad symbol connected directly to the input of a BUFG symbol is automatically placed on one of these pins.
$\overline{\text{CS0}}$, CS1, $\overline{\text{WS}}$, $\overline{\text{RS}}$	I	I/O	These four inputs are used in Asynchronous Peripheral mode. The chip is selected when $\overline{\text{CS0}}$ is Low and CS1 is High. While the chip is selected, a Low on Write Strobe ($\overline{\text{WS}}$) loads the data present on the D0 - D7 inputs into the internal data buffer. A Low on Read Strobe ($\overline{\text{RS}}$) changes D7 into a status output — High if Ready, Low if Busy — and drives D0 - D6 High. In Express mode, CS1 is used as a serial-enable signal for daisy-chaining. $\overline{\text{WS}}$ and $\overline{\text{RS}}$ should be mutually exclusive, but if both are Low simultaneously, the Write Strobe overrides. After configuration, these are user-programmable I/O pins.
A0 - A17	O	I/O	During Master Parallel configuration, these 18 output pins address the configuration EPROM. After configuration, they are user-programmable I/O pins.
D0 - D7	I	I/O	During Master Parallel, Peripheral, and Express configuration, these eight input pins receive configuration data. After configuration, they are user-programmable I/O pins.
DIN	I	I/O	During Slave Serial or Master Serial configuration, DIN is the serial configuration data input receiving data on the rising edge of CCLK. During Parallel configuration, DIN is the D0 input. After configuration, DIN is a user-programmable I/O pin.
DOUT	O	I/O	During configuration in any mode but Express mode, DOUT is the serial configuration data output that can drive the DIN of daisy-chained slave FPGAs. DOUT data changes on the falling edge of CCLK. In Express mode, DOUT is the status output that can drive the CS1 of daisy-chained FPGAs, to enable and disable downstream devices. After configuration, DOUT is a user-programmable I/O pin.

XC5204-6TQ144C Xilinx Inc. IC FPGA 117 I/O 144TQFP
Product Obsolete or Under Obsolescence

Table 9: Pin Descriptions (Continued)

Pin Name	I/O During Config.	I/O After Config.	Pin Description
Unrestricted User-Programmable I/O Pins			
I/O	Weak Pull-up	I/O	These pins can be configured to be input and/or output after configuration is completed. Before configuration is completed, these pins have an internal high-value pull-up resistor (20 kΩ - 100 kΩ) that defines the logic level as High.

Configuration

Configuration is the process of loading design-specific programming data into one or more FPGAs to define the functional operation of the internal blocks and their interconnections. This is somewhat like loading the command registers of a programmable peripheral chip. XC5200-Series devices use several hundred bits of configuration data per CLB and its associated interconnects. Each configuration bit defines the state of a static memory cell that controls either a function look-up table bit, a multiplexer input, or an interconnect pass transistor. The development system translates the design into a netlist file. It automatically partitions, places and routes the logic and generates the configuration data in PROM format.

Special Purpose Pins

Three configuration mode pins (M2, M1, M0) are sampled prior to configuration to determine the configuration mode. After configuration, these pins can be used as auxiliary I/O connections. The development system does not use these resources unless they are explicitly specified in the design entry. This is done by placing a special pad symbol called MD2, MD1, or MD0 instead of the input or output pad symbol.

In XC5200-Series devices, the mode pins have weak pull-up resistors during configuration. With all three mode pins High, Slave Serial mode is selected, which is the most popular configuration mode. Therefore, for the most common configuration mode, the mode pins can be left unconnected. (Note, however, that the internal pull-up resistor value can be as high as 100 kΩ.) After configuration, these pins can individually have weak pull-up or pull-down resistors, as specified in the design. A pull-down resistor value of 3.3kΩ is recommended.

These pins are located in the lower left chip corner and are near the readback nets. This location allows convenient routing if compatibility with the XC2000 and XC3000 family conventions of M0/RT, M1/RD is desired.

Configuration Modes

XC5200 devices have seven configuration modes. These modes are selected by a 3-bit input code applied to the M2, M1, and M0 inputs. There are three self-loading Master modes, two Peripheral modes, and a Serial Slave mode,

Table 10: Configuration Modes

Mode	M2	M1	M0	CCLK	Data
Master Serial	0	0	0	output	Bit-Serial
Slave Serial	1	1	1	input	Bit-Serial
Master Parallel Up	1	0	0	output	Byte-Wide, increment from 00000
Master Parallel Down	1	1	0	output	Byte-Wide, decrement from 3FFFF
Peripheral Synchronous*	0	1	1	input	Byte-Wide
Peripheral Asynchronous	1	0	1	output	Byte-Wide
Express	0	1	0	input	Byte-Wide
Reserved	0	0	1	—	—

Note :*Peripheral Synchronous can be considered byte-wide Slave Parallel

which is used primarily for daisy-chained devices. The seventh mode, called Express mode, is an additional slave mode that allows high-speed parallel configuration. The coding for mode selection is shown in Table 10.

Note that the smallest package, VQ64, only supports the Master Serial, Slave Serial, and Express modes.A detailed description of each configuration mode, with timing information, is included later in this data sheet. During configuration, some of the I/O pins are used temporarily for the configuration process. All pins used during configuration are shown in Table 13 on page 124.

Master Modes

The three Master modes use an internal oscillator to generate a Configuration Clock (CCLK) for driving potential slave devices. They also generate address and timing for external PROM(s) containing the configuration data.

Master Parallel (Up or Down) modes generate the CCLK signal and PROM addresses and receive byte parallel data. The data is internally serialized into the FPGA data-frame format. The up and down selection generates starting addresses at either zero or 3FFFF, for compatibility with different microprocessor addressing conventions. The

XC5204-6TQ144C Xilinx Inc. IC FPGA 117 I/O 144TQFP
Product Obsolete or Under Obsolescence

Master Serial mode generates CCLK and receives the configuration data in serial form from a Xilinx serial-configuration PROM.

CCLK speed is selectable as 1 MHz (default), 6 MHz, or 12 MHz. Configuration always starts at the default slow frequency, then can switch to the higher frequency during the first frame. Frequency tolerance is -50% to +50%.

Peripheral Modes

The two Peripheral modes accept byte-wide data from a bus. A RDY/$\overline{\text{BUSY}}$ status is available as a handshake signal. In Asynchronous Peripheral mode, the internal oscillator generates a CCLK burst signal that serializes the byte-wide data. CCLK can also drive slave devices. In the synchronous mode, an externally supplied clock input to CCLK serializes the data.

Slave Serial Mode

In Slave Serial mode, the FPGA receives serial configuration data on the rising edge of CCLK and, after loading its configuration, passes additional data out, resynchronized on the next falling edge of CCLK.

Multiple slave devices with identical configurations can be wired with parallel DIN inputs. In this way, multiple devices can be configured simultaneously.

Serial Daisy Chain

Multiple devices with different configurations can be connected together in a “daisy chain,” and a single combined bitstream used to configure the chain of slave devices.

To configure a daisy chain of devices, wire the CCLK pins of all devices in parallel, as shown in Figure 28 on page 114. Connect the DOUT of each device to the DIN of the next. The lead or master FPGA and following slaves each passes resynchronized configuration data coming from a single source. The header data, including the length count, is passed through and is captured by each FPGA when it recognizes the 0010 preamble. Following the length-count data, each FPGA outputs a High on DOUT until it has received its required number of data frames.

After an FPGA has received its configuration data, it passes on any additional frame start bits and configuration data on DOUT. When the total number of configuration clocks applied after memory initialization equals the value of the 24-bit length count, the FPGAs begin the start-up sequence and become operational together. FPGA I/O are normally released two CCLK cycles after the last configuration bit is received. Figure 25 on page 109 shows the start-up timing for an XC5200-Series device.

The daisy-chained bitstream is not simply a concatenation of the individual bitstreams. The PROM file formatter must be used to combine the bitstreams for a daisy-chained configuration.

Multi-Family Daisy Chain

All Xilinx FPGAs of the XC2000, XC3000, XC4000, and XC5200 Series use a compatible bitstream format and can, therefore, be connected in a daisy chain in an arbitrary sequence. There is, however, one limitation. If the chain contains XC5200-Series devices, the master normally cannot be an XC2000 or XC3000 device.

The reason for this rule is shown in Figure 25 on page 109. Since all devices in the chain store the same length count value and generate or receive one common sequence of CCLK pulses, they all recognize length-count match on the same CCLK edge, as indicated on the left edge of Figure 25. The master device then generates additional CCLK pulses until it reaches its finish point F. The different families generate or require different numbers of additional CCLK pulses until they reach F. Not reaching F means that the device does not really finish its configuration, although DONE may have gone High, the outputs became active, and the internal reset was released. For the XC5200-Series device, not reaching F means that readback cannot be initiated and most boundary scan instructions cannot be used.

The user has some control over the relative timing of these events and can, therefore, make sure that they occur at the proper time and the finish point F is reached. Timing is controlled using options in the bitstream generation software.

XC5200 devices always have the same number of CCLKs in the power up delay, independent of the configuration mode, unlike the XC3000/XC4000 Series devices. To guarantee all devices in a daisy chain have finished the power-up delay, tie the INIT pins together, as shown in Figure 27.

XC3000 Master with an XC5200-Series Slave

Some designers want to use an XC3000 lead device in peripheral mode and have the I/O pins of the XC5200-Series devices all available for user I/O. Figure 22 provides a solution for that case.

This solution requires one CLB, one IOB and pin, and an internal oscillator with a frequency of up to 5 MHz as a clock source. The XC3000 master device must be configured with late Internal Reset, which is the default option.

One CLB and one IOB in the lead XC3000-family device are used to generate the additional CCLK pulse required by the XC5200-Series devices. When the lead device removes the internal RESET signal, the 2-bit shift register responds to its clock input and generates an active Low output signal for the duration of the subsequent clock period. An external connection between this output and CCLK thus creates the extra CCLK pulse.

XC5204-6TQ144C Xilinx Inc. IC FPGA 117 I/O 144TQFP
Product Obsolete or Under Obsolescence

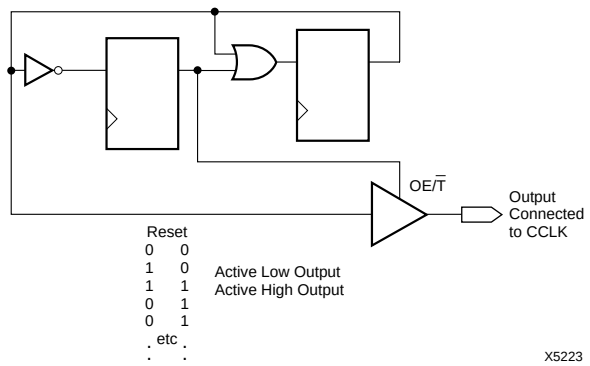

Figure 22: CCLK Generation for XC3000 Master Driving an XC5200-Series Slave

Express Mode

Express mode is similar to Slave Serial mode, except the data is presented in parallel format, and is clocked into the target device a byte at a time rather than a bit at a time. The data is loaded in parallel into eight different columns: it is not internally serialized. Eight bits of configuration data are loaded with every CCLK cycle, therefore this configuration mode runs at eight times the data rate of the other six modes. In this mode the XC5200 family is capable of supporting a CCLK frequency of 10 MHz, which is equivalent to an 80 MHz serial rate, because eight bits of configuration data are being loaded per CCLK cycle. An XC5210 in the Express mode, for instance, can be configured in about 2 ms. The Express mode does not support CRC error checking, but does support constant-field error checking. A length count is not used in Express mode.

In the Express configuration mode, an external signal drives the CCLK input(s). The first byte of parallel configuration data must be available at the D inputs of the FPGA devices a short set-up time before the second rising CCLK edge. Subsequent data bytes are clocked in on each consecutive rising CCLK edge. See Figure 38 on page 123.

Bitstream generation currently generates a bitstream sufficient to program in all configuration modes except Express. Extra CCLK cycles are necessary to complete the configuration, since in this mode data is read at a rate of eight bits per CCLK cycle instead of one bit per cycle. Normally the entire start-up sequence requires a number of bits that is equal to the number of CCLK cycles needed. An additional five CCLKs (equivalent to 40 extra bits) will guarantee completion of configuration, regardless of the start-up options chosen.

Multiple slave devices with identical configurations can be wired with parallel D0-D7 inputs. In this way, multiple devices can be configured simultaneously.

Pseudo Daisy Chain

Multiple devices with different configurations can be connected together in a pseudo daisy chain, provided that all of the devices are in Express mode. A single combined bitstream is used to configure the chain of Express mode devices, but the input data bus must drive D0-D7 of each device. Tie High the CS1 pin of the first device to be configured, or leave it floating in the XC5200 since it has an internal pull-up. Connect the DOUT pin of each FPGA to the CS1 pin of the next device in the chain. The D0-D7 inputs are wired to each device in parallel. The DONE pins are wired together, with one or more internal DONE pull-ups activated. Alternatively, a 4.7 kΩ external resistor can be used, if desired. (See Figure 37 on page 122.) CCLK pins are tied together.

The requirement that all DONE pins in a daisy chain be wired together applies only to Express mode, and only if all devices in the chain are to become active simultaneously. All devices in Express mode are synchronized to the DONE pin. User I/O for each device become active after the DONE pin for that device goes High. (The exact timing is determined by options to the bitstream generation software.) Since the DONE pin is open-drain and does not drive a High value, tying the DONE pins of all devices together prevents all devices in the chain from going High until the last device in the chain has completed its configuration cycle.

The status pin DOUT is pulled LOW two internal-oscillator cycles (nominally 1 MHz) after $\overline{\text{INIT}}$ is recognized as High, and remains Low until the device's configuration memory is full. Then DOUT is pulled High to signal the next device in the chain to accept the configuration data on the D7-D0 bus. All devices receive and recognize the six bytes of preamble and length count, irrespective of the level on CS1; but subsequent frame data is accepted only when CS1 is High and the device's configuration memory is not already full.

Setting CCLK Frequency

For Master modes, CCLK can be generated in one of three frequencies. In the default slow mode, the frequency is nominally 1 MHz. In fast CCLK mode, the frequency is nominally 12 MHz. In medium CCLK mode, the frequency is nominally 6 MHz. The frequency range is -50% to +50%. The frequency is selected by an option when running the bitstream generation software. If an XC5200-Series Master is driving an XC3000- or XC2000-family slave, slow CCLK mode must be used. Slow mode is the default.

Table 11: XC5200 Bitstream Format

Data Type	Value	Occurrences
Fill Byte	11111111	Once per bitstream
Preamble	11110010	
Length Counter	COUNT(23:0)	
Fill Byte	11111111	

XC5204-6TQ144C Xilinx Inc. IC FPGA 117 I/O 144TQFP
Product Obsolete or Under Obsolescence

Table 11: XC5200 Bitstream Format

Data Type	Value	Occurrences
Start Byte	11111110	Once per data frame
Data Frame *	DATA(N-1:0)	
Cyclic Redundancy Check or Constant Field Check	CRC(3:0) or 0110	
Fill Nibble	1111	
Extend Write Cycle	FFFFFF	
Postamble	11111110	Once per device
Fill Bytes (30)	FFFF…FF	
Start-Up Byte	FF	Once per bitstream
*Bits per Frame (N) depends on device size, as described for table 11.		

Data Stream Format

The data stream ("bitstream") format is identical for all configuration modes, with the exception of Express mode. In Express mode, the device becomes active when DONE goes High, therefore no length count is required. Additionally, CRC error checking is not supported in Express mode.

The data stream formats are shown in Table 11. Express mode data is shown with D0 at the left and D7 at the right. For all other modes, bit-serial data is read from left to right, and byte-parallel data is effectively assembled from this serial bitstream, with the first bit in each byte assigned to D0.

The configuration data stream begins with a string of eight ones, a preamble code, followed by a 24-bit length count and a separator field of ones (or 24 fill bits, in Express mode). This header is followed by the actual configuration data in frames. The length and number of frames depends on the device type (see Table 12). Each frame begins with a start field and ends with an error check. In all modes except Express mode, a postamble code is required to signal the end of data for a single device. In all cases, additional start-up bytes of data are required to provide four clocks for the startup sequence at the end of configuration. Long daisy chains require additional startup bytes to shift the last data through the chain. All startup bytes are don't-cares; these bytes are not included in bitstreams created by the Xilinx software.

In Express mode, only non-CRC error checking is supported. In all other modes, a selection of CRC or non-CRC error checking is allowed by the bitstream generation software. The non-CRC error checking tests for a designated end-of-frame field for each frame. For CRC error checking, the software calculates a running CRC and inserts a unique four-bit partial check at the end of each frame. The 11-bit CRC check of the last frame of an FPGA includes the last seven data bits.

Detection of an error results in the suspension of data loading and the pulling down of the $\overline{\text{INIT}}$ pin. In Master modes, CCLK and address signals continue to operate externally. The user must detect $\overline{\text{INIT}}$ and initialize a new configuration by pulsing the $\overline{\text{PROGRAM}}$ pin Low or cycling Vcc.

Table 12: Internal Configuration Data Structure

Device	VersaBlock Array	PROM Size (bits)	Xilinx Serial PROM Needed
XC5202	8 x 8	42,416	XC1765E
XC5204	10 x 12	70,704	XC17128E
XC5206	14 x 14	106,288	XC17128E
XC5210	18 x 18	165,488	XC17256E
XC5215	22 x 22	237,744	XC17256E

Bits per Frame = (34 x number of Rows) + 28 for the top + 28 for the bottom + 4 splitter bits + 8 start bits + 4 error check bits + 4 fill bits * + 24 extended write bits
= (34 x number of Rows) + 100
* In the XC5202 (8 x 8), there are 8 fill bits per frame, not 4

Number of Frames = (12 x number of Columns) + 7 for the left edge + 8 for the right edge + 1 splitter bit
= (12 x number of Columns) + 16

Program Data = (Bits per Frame x Number of Frames) + 48 header bits + 8 postamble bits + 240 fill bits + 8 start-up bits
= (Bits per Frame x Number of Frames) + 304

PROM Size = Program Data

Cyclic Redundancy Check (CRC) for Configuration and Readback

The Cyclic Redundancy Check is a method of error detection in data transmission applications. Generally, the transmitting system performs a calculation on the serial bitstream. The result of this calculation is tagged onto the data stream as additional check bits. The receiving system performs an identical calculation on the bitstream and compares the result with the received checksum.

Each data frame of the configuration bitstream has four error bits at the end, as shown in Table 11. If a frame data error is detected during the loading of the FPGA, the configuration process with a potentially corrupted bitstream is terminated. The FPGA pulls the $\overline{\text{INIT}}$ pin Low and goes into a Wait state.

During Readback, 11 bits of the 16-bit checksum are added to the end of the Readback data stream. The checksum is computed using the CRC-16 CCITT polynomial, as shown in Figure 23. The checksum consists of the 11 most significant bits of the 16-bit code. A change in the checksum indicates a change in the Readback bitstream. A comparison to a previous checksum is meaningful only if the readback data is independent of the current device state. CLB outputs should not be included (Read Capture option not used). Statistically, one error out of 2048 might go undetected.

XC5204-6TQ144C Xilinx Inc. IC FPGA 117 I/O 144TQFP
Product Obsolete or Under Obsolescence

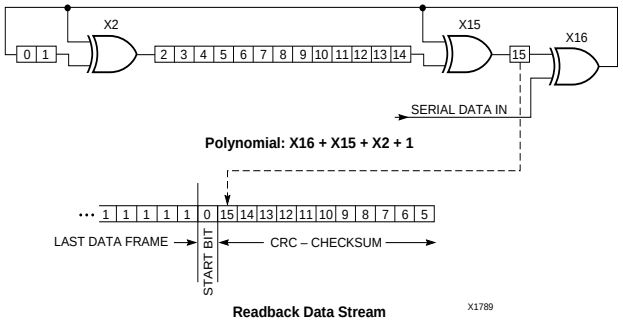

Figure 23: Circuit for Generating CRC-16

Configuration Sequence

There are four major steps in the XC5200-Series power-up configuration sequence.

- Power-On Time-Out
- Initialization
- Configuration
- Start-Up

The full process is illustrated in Figure 24.

Power-On Time-Out

An internal power-on reset circuit is triggered when power is applied. When V_{CC} reaches the voltage at which portions of the FPGA begin to operate (i.e., performs a write-and-read test of a sample pair of configuration memory bits), the programmable I/O buffers are 3-stated with active high-impedance pull-up resistors. A time-out delay — nominally 4 ms — is initiated to allow the power-supply voltage to stabilize. For correct operation the power supply must reach V_{CC}(min) by the end of the time-out, and must not dip below it thereafter.

There is no distinction between master and slave modes with regard to the time-out delay. Instead, the $\overline{\text{INIT}}$ line is used to ensure that all daisy-chained devices have completed initialization. Since XC2000 devices do not have this signal, extra care must be taken to guarantee proper operation when daisy-chaining them with XC5200 devices. For proper operation with XC3000 devices, the $\overline{\text{RESET}}$ signal, which is used in XC3000 to delay configuration, should be connected to $\overline{\text{INIT}}$.

If the time-out delay is insufficient, configuration should be delayed by holding the $\overline{\text{INIT}}$ pin Low until the power supply has reached operating levels.

This delay is applied only on power-up. It is not applied when reconfiguring an FPGA by pulsing the $\overline{\text{PROGRAM}}$ pin Low. During all three phases — Power-on, Initialization, and Configuration — DONE is held Low; HDC, $\overline{\text{LDC}}$, and $\overline{\text{INIT}}$ are active; DOUT is driven; and all I/O buffers are disabled.

Initialization

This phase clears the configuration memory and establishes the configuration mode.

The configuration memory is cleared at the rate of one frame per internal clock cycle (nominally 1 MHz). An open-drain bidirectional signal, $\overline{\text{INIT}}$, is released when the configuration memory is completely cleared. The device then tests for the absence of an external active-low level on $\overline{\text{INIT}}$. The mode lines are sampled two internal clock cycles later (nominally 2 µs).

The master device waits an additional 32 µs to 256 µs (nominally 64-128 µs) to provide adequate time for all of the slave devices to recognize the release of $\overline{\text{INIT}}$ as well. Then the master device enters the Configuration phase.

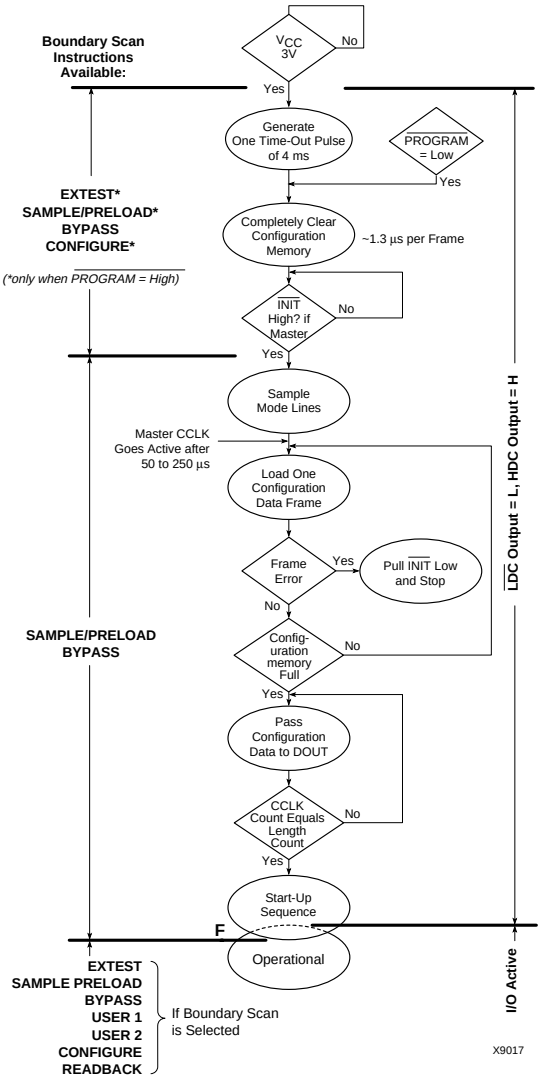

Figure 24: Configuration Sequence

XC5204-6TQ144C Xilinx Inc. IC FPGA 117 I/O 144TQFP
Product Obsolete or Under Obsolescence

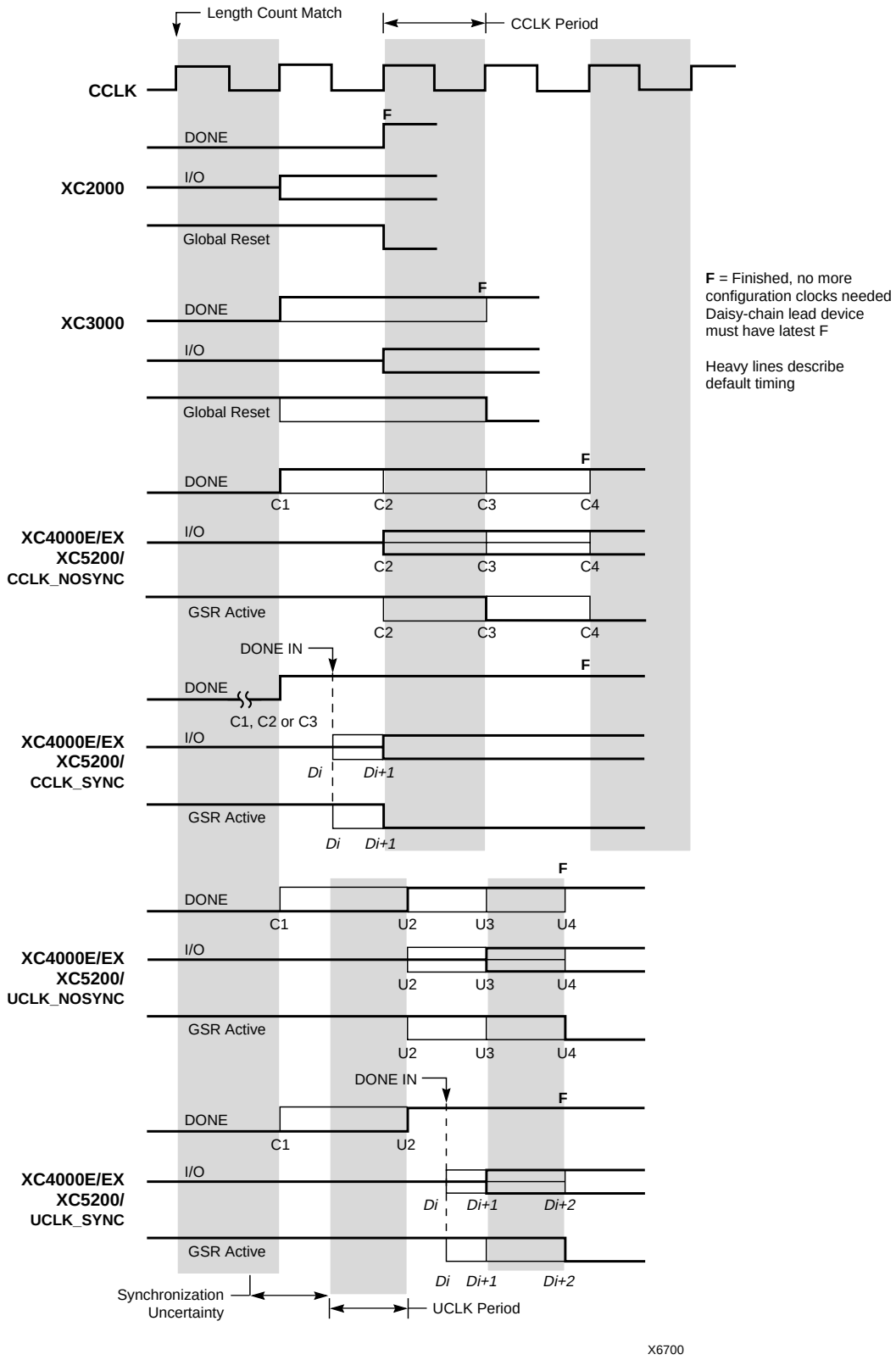

Figure 25: Start-up Timing

XC5204-6TQ144C Xilinx Inc. IC FPGA 117 I/O 144TQFP
Product Obsolete or Under Obsolescence

Configuration

The length counter begins counting immediately upon entry into the configuration state. In slave-mode operation it is important to wait at least two cycles of the internal 1-MHz clock oscillator after $\overline{\text{INIT}}$ is recognized before toggling CCLK and feeding the serial bitstream. Configuration will not begin until the internal configuration logic reset is released, which happens two cycles after $\overline{\text{INIT}}$ goes High. A master device's configuration is delayed from 32 to 256 µs to ensure proper operation with any slave devices driven by the master device.

The 0010 preamble code, included for all modes except Express mode, indicates that the following 24 bits represent the length count. The length count is the total number of configuration clocks needed to load the complete configuration data. (Four additional configuration clocks are required to complete the configuration process, as discussed below.) After the preamble and the length count have been passed through to all devices in the daisy chain, DOUT is held High to prevent frame start bits from reaching any daisy-chained devices. In Express mode, the length count bits are ignored, and DOUT is held Low, to disable the next device in the pseudo daisy chain.

A specific configuration bit, early in the first frame of a master device, controls the configuration-clock rate and can increase it by a factor of eight. Therefore, if a fast configuration clock is selected by the bitstream, the slower clock rate is used until this configuration bit is detected.

Each frame has a start field followed by the frame-configuration data bits and a frame error field. If a frame data error is detected, the FPGA halts loading, and signals the error by pulling the open-drain $\overline{\text{INIT}}$ pin Low. After all configuration frames have been loaded into an FPGA, DOUT again follows the input data so that the remaining data is passed on to the next device. In Express mode, when the first device is fully programmed, DOUT goes High to enable the next device in the chain.

Delaying Configuration After Power-Up

To delay master mode configuration after power-up, pull the bidirectional $\overline{\text{INIT}}$ pin Low, using an open-collector (open-drain) driver. (See Figure 12.)

Using an open-collector or open-drain driver to hold $\overline{\text{INIT}}$ Low before the beginning of master mode configuration causes the FPGA to wait after completing the configuration memory clear operation. When $\overline{\text{INIT}}$ is no longer held Low externally, the device determines its configuration mode by capturing its mode pins, and is ready to start the configuration process. A master device waits up to an additional 250 µs to make sure that any slaves in the optional daisy chain have seen that $\overline{\text{INIT}}$ is High.

Start-Up

Start-up is the transition from the configuration process to the intended user operation. This transition involves a change from one clock source to another, and a change from interfacing parallel or serial configuration data where most outputs are 3-stated, to normal operation with I/O pins active in the user-system. Start-up must make sure that the user-logic 'wakes up' gracefully, that the outputs become active without causing contention with the configuration signals, and that the internal flip-flops are released from the global Reset at the right time.

Figure 25 describes start-up timing for the three Xilinx families in detail. Express mode configuration always uses either CCLK_SYNC or UCLK_SYNC timing, the other configuration modes can use any of the four timing sequences.

To access the internal start-up signals, place the STARTUP library symbol.

Start-up Timing

Different FPGA families have different start-up sequences.

The XC2000 family goes through a fixed sequence. DONE goes High and the internal global Reset is de-activated one CCLK period after the I/O become active.

The XC3000A family offers some flexibility. DONE can be programmed to go High one CCLK period before or after the I/O become active. Independent of DONE, the internal global Reset is de-activated one CCLK period before or after the I/O become active.

The XC4000/XC5200 Series offers additional flexibility. The three events — DONE going High, the internal Reset being de-activated, and the user I/O going active — can all occur in any arbitrary sequence. Each of them can occur one CCLK period before or after, or simultaneous with, any of the others. This relative timing is selected by means of software options in the bitstream generation software.

The default option, and the most practical one, is for DONE to go High first, disconnecting the configuration data source and avoiding any contention when the I/Os become active one clock later. Reset is then released another clock period later to make sure that user-operation starts from stable internal conditions. This is the most common sequence, shown with heavy lines in Figure 25, but the designer can modify it to meet particular requirements.

Normally, the start-up sequence is controlled by the internal device oscillator output (CCLK), which is asynchronous to the system clock.

XC4000/XC5200 Series offers another start-up clocking option, UCLK_NOSYNC. The three events described above need not be triggered by CCLK. They can, as a configuration option, be triggered by a user clock. This means that the device can wake up in synchronism with the user system.

XC5204-6TQ144C Xilinx Inc. IC FPGA 117 I/O 144TQFP
Product Obsolete or Under Obsolescence

When the UCLK_SYNC option is enabled, the user can externally hold the open-drain DONE output Low, and thus stall all further progress in the start-up sequence until DONE is released and has gone High. This option can be used to force synchronization of several FPGAs to a common user clock, or to guarantee that all devices are successfully configured before any I/Os go active.

If either of these two options is selected, and no user clock is specified in the design or attached to the device, the chip could reach a point where the configuration of the device is complete and the Done pin is asserted, but the outputs do not become active. The solution is either to recreate the bitstream specifying the start-up clock as CCLK, or to supply the appropriate user clock.

Start-up Sequence

The Start-up sequence begins when the configuration memory is full, and the total number of configuration clocks received since $\overline{\text{INIT}}$ went High equals the loaded value of the length count.

The next rising clock edge sets a flip-flop Q0, shown in Figure 26. Q0 is the leading bit of a 5-bit shift register. The outputs of this register can be programmed to control three events.

- The release of the open-drain DONE output
- The change of configuration-related pins to the user function, activating all IOBs.
- The termination of the global Set/Reset initialization of all CLB and IOB storage elements.

The DONE pin can also be wire-ANDed with DONE pins of other FPGAs or with other external signals, and can then be used as input to bit Q3 of the start-up register. This is called “Start-up Timing Synchronous to Done In” and is selected by either CCLK_SYNC or UCLK_SYNC.

When DONE is not used as an input, the operation is called “Start-up Timing Not Synchronous to DONE In,” and is selected by either CCLK_NOSYNC or UCLK_NOSYNC.

As a configuration option, the start-up control register beyond Q0 can be clocked either by subsequent CCLK pulses or from an on-chip user net called STARTUP.CLK. These signals can be accessed by placing the STARTUP library symbol.

Start-up from CCLK

If CCLK is used to drive the start-up, Q0 through Q3 provide the timing. Heavy lines in Figure 25 show the default timing, which is compatible with XC2000 and XC3000 devices using early DONE and late Reset. The thin lines indicate all other possible timing options.

Start-up from a User Clock (STARTUP.CLK)

When, instead of CCLK, a user-supplied start-up clock is selected, Q1 is used to bridge the unknown phase relationship between CCLK and the user clock. This arbitration causes an unavoidable one-cycle uncertainty in the timing of the rest of the start-up sequence.

DONE Goes High to Signal End of Configuration

In all configuration modes except Express mode, XC5200-Series devices read the expected length count from the bitstream and store it in an internal register. The length count varies according to the number of devices and the composition of the daisy chain. Each device also counts the number of CCLKs during configuration.

Two conditions have to be met in order for the DONE pin to go high:

- the chip's internal memory must be full, and
- the configuration length count must be met, *exactly*.

This is important because the counter that determines when the length count is met begins with the very first CCLK, not the first one after the preamble.

Therefore, if a stray bit is inserted before the preamble, or the data source is not ready at the time of the first CCLK, the internal counter that holds the number of CCLKs will be one ahead of the actual number of data bits read. At the end of configuration, the configuration memory will be full, but the number of bits in the internal counter will not match the expected length count.

As a consequence, a Master mode device will continue to send out CCLKs until the internal counter turns over to zero, and then reaches the correct length count a second time. This will take several seconds [$2^{24} * $ CCLK period] — which is sometimes interpreted as the device not configuring at all.

If it is not possible to have the data ready at the time of the first CCLK, the problem can be avoided by increasing the number in the length count by the appropriate value.

In Express mode, there is no length count. The DONE pin for each device goes High when the device has received its quota of configuration data. Wiring the DONE pins of several devices together delays start-up of all devices until all are fully configured.

Note that DONE is an open-drain output and does not go High unless an internal pull-up is activated or an external pull-up is attached. The internal pull-up is activated as the default by the bitstream generation software.

Release of User I/O After DONE Goes High

By default, the user I/O are released one CCLK cycle after the DONE pin goes High. If CCLK is not clocked after DONE goes High, the outputs remain in their initial state — 3-stated, with a 20 kΩ - 100 kΩ pull-up. The delay from

XC5204-6TQ144C Xilinx Inc. IC FPGA 117 I/O 144TQFP
Product Obsolete or Under Obsolescence

DONE High to active user I/O is controlled by an option to the bitstream generation software.

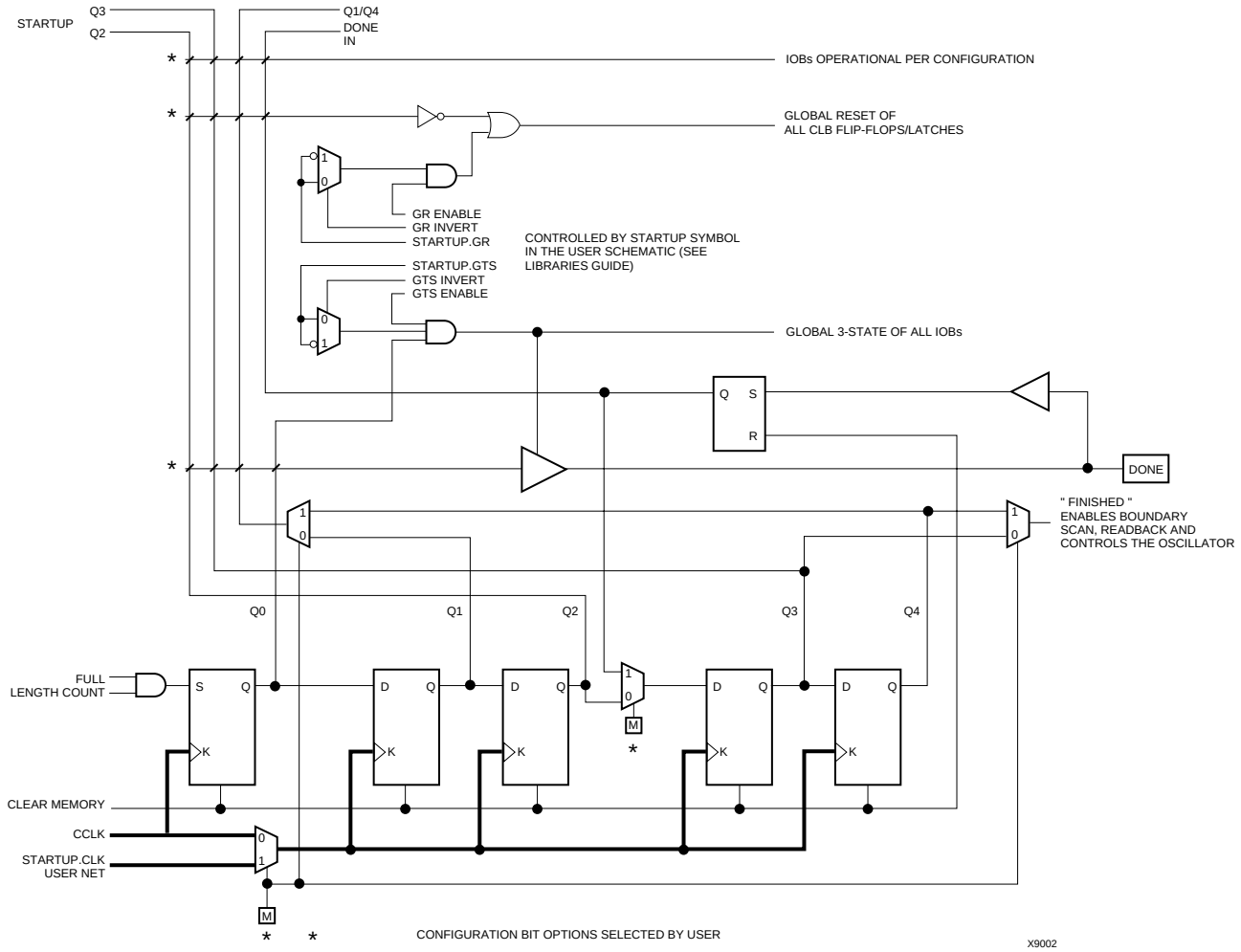

Figure 26: Start-up Logic

Release of Global Reset After DONE Goes High

By default, Global Reset (GR) is released two CCLK cycles after the DONE pin goes High. If CCLK is not clocked twice after DONE goes High, all flip-flops are held in their initial reset state. The delay from DONE High to GR inactive is controlled by an option to the bitstream generation software.

Configuration Complete After DONE Goes High

Three full CCLK cycles are required after the DONE pin goes High, as shown in Figure 25 on page 109. If CCLK is not clocked three times after DONE goes High, readback cannot be initiated and most boundary scan instructions cannot be used.

Configuration Through the Boundary Scan Pins

XC5200-Series devices can be configured through the boundary scan pins.

For detailed information, refer to the Xilinx application note XAPP017, "*Boundary Scan in XC4000 and XC5200 Devices*."

Readback

The user can read back the content of configuration memory and the level of certain internal nodes without interfering with the normal operation of the device.

Readback not only reports the downloaded configuration bits, but can also include the present state of the device, represented by the content of all flip-flops and latches in CLBs.

XC5204-6TQ144C Xilinx Inc. IC FPGA 117 I/O 144TQFP
Product Obsolete or Under Obsolescence

Note that in XC5200-Series devices, configuration data is *not* inverted with respect to configuration as it is in XC2000 and XC3000 families.

Readback of Express mode bitstreams results in data that does not resemble the original bitstream, because the bitstream format differs from other modes.

XC5200-Series Readback does not use any dedicated pins, but uses four internal nets (RDBK.TRIG, RDBK.DATA, RDBK.RIP and RDBK.CLK) that can be routed to any IOB. To access the internal Readback signals, place the READBACK library symbol and attach the appropriate pad symbols, as shown in Figure 27.

After Readback has been initiated by a Low-to-High transition on RDBK.TRIG, the RDBK.RIP (Read In Progress) output goes High on the next rising edge of RDBK.CLK. Subsequent rising edges of this clock shift out Readback data on the RDBK.DATA net.

Readback data does not include the preamble, but starts with five dummy bits (all High) followed by the Start bit (Low) of the first frame. The first two data bits of the first frame are always High.

Each frame ends with four error check bits. They are read back as High. The last seven bits of the last frame are also read back as High. An additional Start bit (Low) and an 11-bit Cyclic Redundancy Check (CRC) signature follow, before RDBK.RIP returns Low.

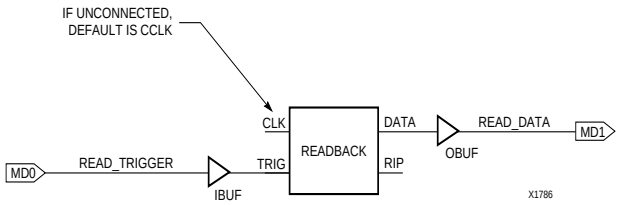

Figure 27: Readback Schematic Example

Readback Options

Readback options are: Read Capture, Read Abort, and Clock Select. They are set with the bitstream generation software.

Read Capture

When the Read Capture option is selected, the readback data stream includes sampled values of CLB and IOB signals. The rising edge of RDBK.TRIG latches the inverted values of the CLB outputs and the IOB output and input signals. Note that while the bits describing configuration (interconnect and function generators) are *not* inverted, the CLB and IOB output signals *are* inverted.

When the Read Capture option is not selected, the values of the capture bits reflect the configuration data originally written to those memory locations.

The readback signals are located in the lower-left corner of the device.

Read Abort

When the Read Abort option is selected, a High-to-Low transition on RDBK.TRIG terminates the readback operation and prepares the logic to accept another trigger.

After an aborted readback, additional clocks (up to one readback clock per configuration frame) may be required to re-initialize the control logic. The status of readback is indicated by the output control net RDBK.RIP. RDBK.RIP is High whenever a readback is in progress.

Clock Select

CCLK is the default clock. However, the user can insert another clock on RDBK.CLK. Readback control and data are clocked on rising edges of RDBK.CLK. If readback must be inhibited for security reasons, the readback control nets are simply not connected.

Violating the Maximum High and Low Time Specification for the Readback Clock

The readback clock has a maximum High and Low time specification. In some cases, this specification cannot be met. For example, if a processor is controlling readback, an interrupt may force it to stop in the middle of a readback. This necessitates stopping the clock, and thus violating the specification.

The specification is mandatory only on clocking data at the end of a frame prior to the next start bit. The transfer mechanism will load the data to a shift register during the last six clock cycles of the frame, prior to the start bit of the following frame. This loading process is dynamic, and is the source of the maximum High and Low time requirements.

Therefore, the specification only applies to the six clock cycles prior to and including any start bit, including the clocks before the first start bit in the readback data stream. At other times, the frame data is already in the register and the register is not dynamic. Thus, it can be shifted out just like a regular shift register.

The user must precisely calculate the location of the readback data relative to the frame. The system must keep track of the position within a data frame, and disable interrupts before frame boundaries. Frame lengths and data formats are listed in Table 11 and Table 12.

Readback with the XChecker Cable

The XChecker Universal Download/Readback Cable and Logic Probe uses the readback feature for bitstream verification. It can also display selected internal signals on the PC or workstation screen, functioning as a low-cost in-circuit emulator.

XC5204-6TQ144C Xilinx Inc. IC FPGA 117 I/O 144TQFP
Product Obsolete or Under Obsolescence

Configuration Timing

The seven configuration modes are discussed in detail in this section. Timing specifications are included.

Slave Serial Mode

In Slave Serial mode, an external signal drives the CCLK input of the FPGA. The serial configuration bitstream must be available at the DIN input of the lead FPGA a short setup time before each rising CCLK edge.

The lead FPGA then presents the preamble data—and all data that overflows the lead device—on its DOUT pin.

There is an internal delay of 0.5 CCLK periods, which means that DOUT changes on the falling CCLK edge, and the next FPGA in the daisy chain accepts data on the subsequent rising CCLK edge.

Figure 28 shows a full master/slave system. An XC5200-Series device in Slave Serial mode should be connected as shown in the third device from the left.

Slave Serial mode is selected by a <111> on the mode pins (M2, M1, M0). Slave Serial is the default mode if the mode pins are left unconnected, as they have weak pull-up resistors during configuration.

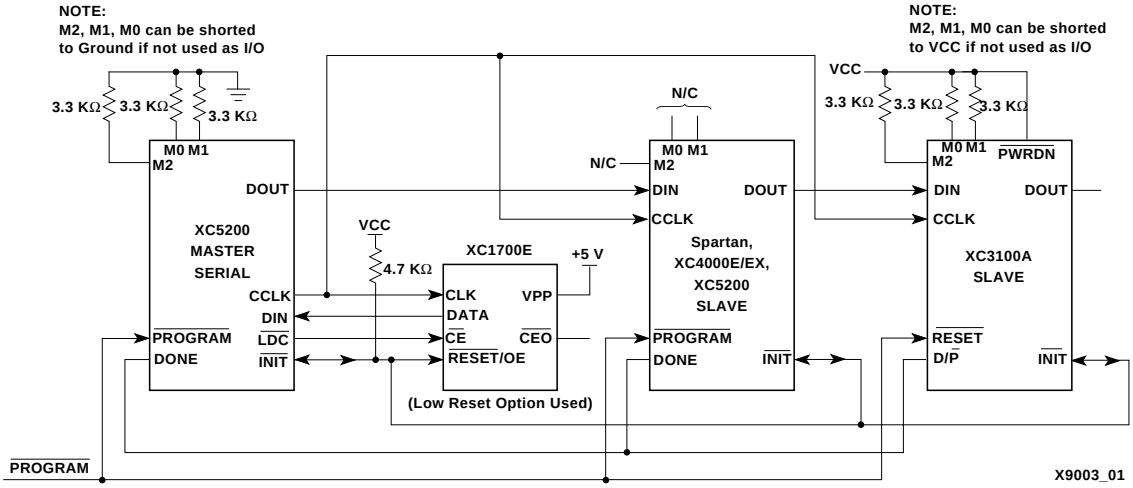

Figure 28: Master/Slave Serial Mode Circuit Diagram

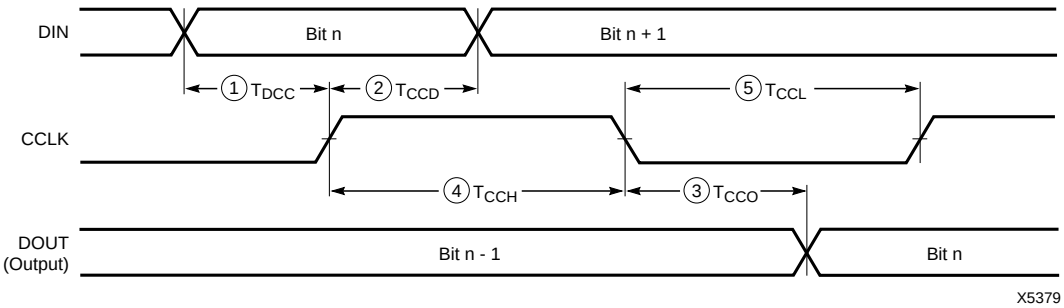

	Description	Symbol		Min	Max	Units
CCLK	DIN setup	1	T_{DCC}	20		ns
	DIN hold	2	T_{CCD}	0		ns
	DIN to DOUT	3	T_{CCO}		30	ns
	High time	4	T_{CCH}	45		ns
	Low time	5	T_{CCL}	45		ns
	Frequency		F_{CC}		10	MHz

Note: Configuration must be delayed until the $\overline{\text{INIT}}$ pins of all daisy-chained FPGAs are High.

Figure 29: Slave Serial Mode Programming Switching Characteristics

XC5204-6TQ144C Xilinx Inc. IC FPGA 117 I/O 144TQFP
Product Obsolete or Under Obsolescence

Master Serial Mode

In Master Serial mode, the CCLK output of the lead FPGA drives a Xilinx Serial PROM that feeds the FPGA DIN input. Each rising edge of the CCLK output increments the Serial PROM internal address counter. The next data bit is put on the SPROM data output, connected to the FPGA DIN pin. The lead FPGA accepts this data on the subsequent rising CCLK edge.

The lead FPGA then presents the preamble data—and all data that overflows the lead device—on its DOUT pin. There is an internal pipeline delay of 1.5 CCLK periods, which means that DOUT changes on the falling CCLK edge, and the next FPGA in the daisy chain accepts data on the subsequent rising CCLK edge.

In the bitstream generation software, the user can specify Fast ConfigRate, which, starting several bits into the first frame, increases the CCLK frequency by a factor of twelve. The value increases from a nominal 1 MHz, to a nominal 12 MHz. Be sure that the serial PROM and slaves are fast enough to support this data rate. The Medium ConfigRate option changes the frequency to a nominal 6 MHz. XC2000, XC3000/A, and XC3100A devices do not support the Fast or Medium ConfigRate options.

The SPROM CE input can be driven from either $\overline{LDC}$ or DONE. Using $\overline{LDC}$ avoids potential contention on the DIN pin, if this pin is configured as user-I/O, but $\overline{LDC}$ is then restricted to be a permanently High user output after configuration. Using DONE can also avoid contention on DIN, provided the DONE before I/O enable option is invoked.

Figure 28 on page 114 shows a full master/slave system. The leftmost device is in Master Serial mode.

Master Serial mode is selected by a <000> on the mode pins (M2, M1, M0).

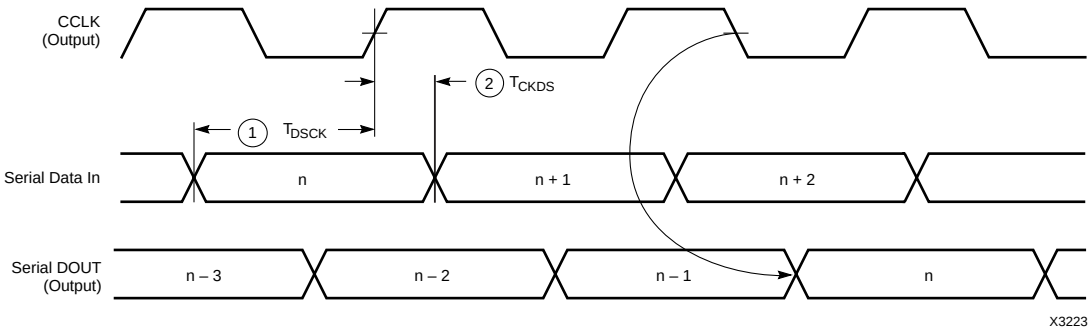

	Description	Symbol		Min	Max	Units
CCLK	DIN setup	1	T_{DSCK}	20		ns
	DIN hold	2	T_{CKDS}	0		ns

Notes: 1. At power-up, Vcc must rise from 2.0 V to Vcc min in less than 25 ms, otherwise delay configuration by pulling $\overline{PROGRAM}$ Low until Vcc is valid.
2. Master Serial mode timing is based on testing in slave mode.

Figure 30: Master Serial Mode Programming Switching Characteristics

In the two Master Parallel modes, the lead FPGA directly addresses an industry-standard byte-wide EPROM, and accepts eight data bits just before incrementing or decrementing the address outputs.

The eight data bits are serialized in the lead FPGA, which then presents the preamble data—and all data that overflows the lead device—on its DOUT pin. There is an internal delay of 1.5 CCLK periods, after the rising CCLK edge that accepts a byte of data (and also changes the EPROM address) until the falling CCLK edge that makes the LSB (D0) of this byte appear at DOUT. This means that DOUT changes on the falling CCLK edge, and the next FPGA in the daisy chain accepts data on the subsequent rising CCLK edge.

The PROM address pins can be incremented or decremented, depending on the mode pin settings. This option allows the FPGA to share the PROM with a wide variety of microprocessors and microcontrollers. Some processors must boot from the bottom of memory (all zeros) while others must boot from the top. The FPGA is flexible and can load its configuration bitstream from either end of the memory.

Master Parallel Up mode is selected by a <100> on the mode pins (M2, M1, M0). The EPROM addresses start at 00000 and increment.

Master Parallel Down mode is selected by a <110> on the mode pins. The EPROM addresses start at 3FFFF and decrement.

XC5204-6TQ144C Xilinx Inc. IC FPGA 117 I/O 144TQFP
Product Obsolete or Under Obsolescence

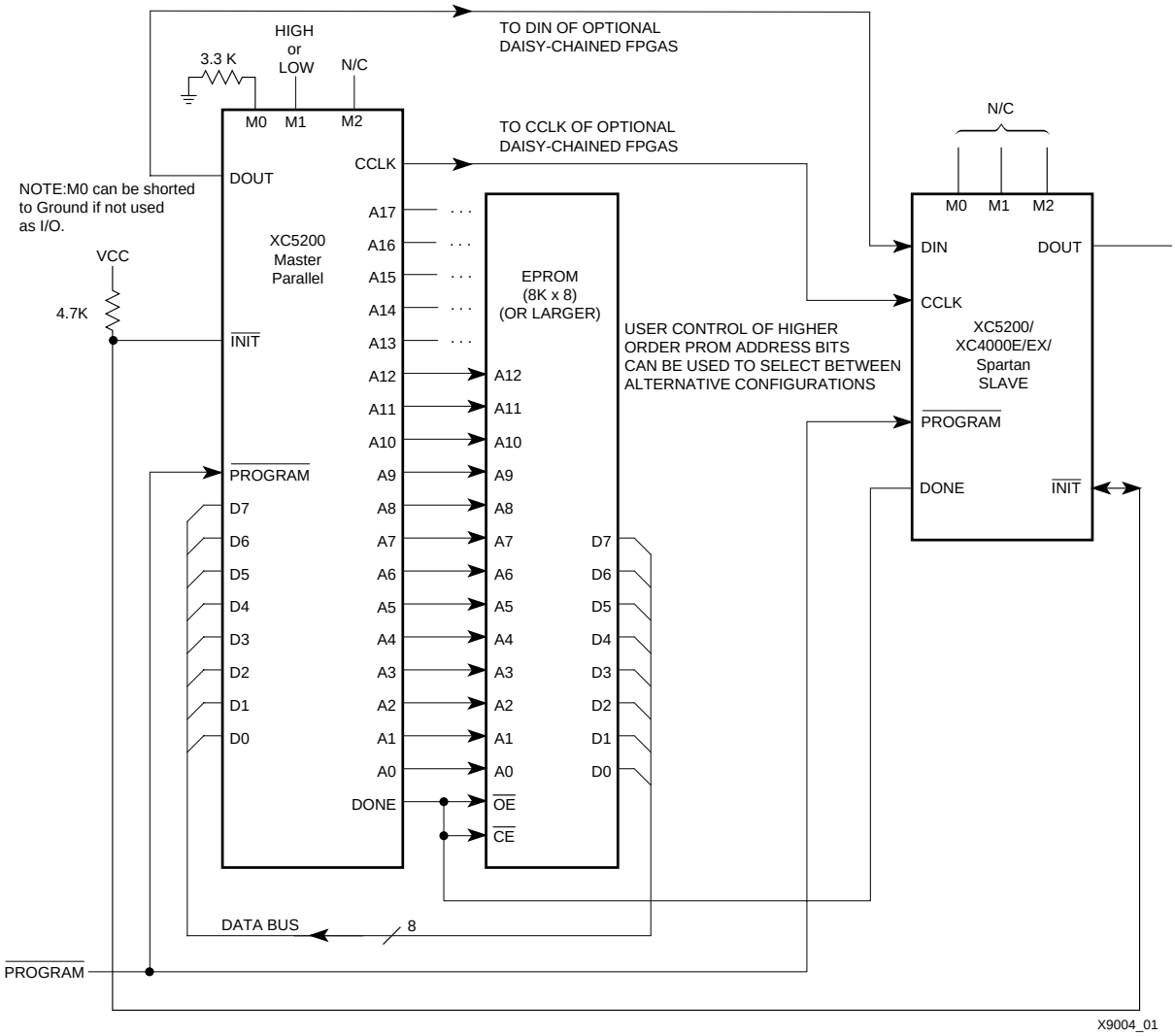

Figure 31: Master Parallel Mode Circuit Diagram

XC5204-6TQ144C Xilinx Inc. IC FPGA 117 I/O 144TQFP
Product Obsolete or Under Obsolescence

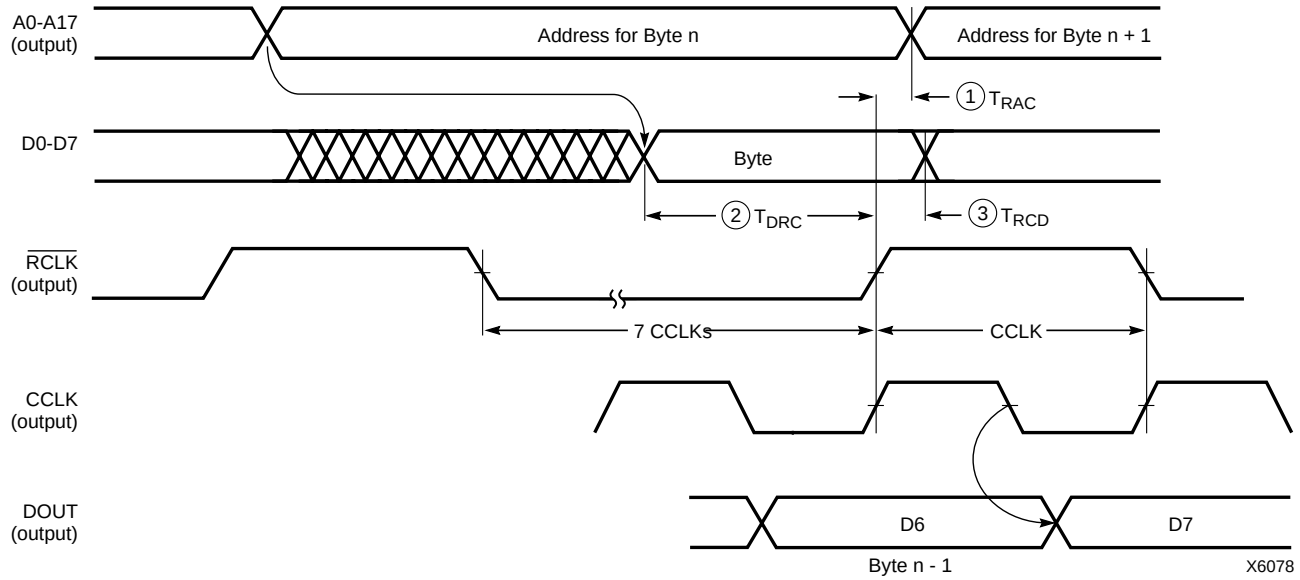

	Description	Symbol		Min	Max	Units
CCLK	Delay to Address valid	1	T_{RAC}	0	200	ns
	Data setup time	2	T_{DRC}	60		ns
	Data hold time	3	T_{RCD}	0		ns

Note: 1. At power-up, V_{CC} must rise from 2.0 V to V_{CC} min in less then 25 ms, otherwise delay configuration by pulling $\overline{\text{PROGRAM}}$ Low until V_{CC} is Valid.
2. The first Data byte is loaded and CCLK starts at the end of the first $\overline{\text{RCLK}}$ active cycle (rising edge).

This timing diagram shows that the EPROM requirements are extremely relaxed. EPROM access time can be longer than 500 ns. EPROM data output has no hold-time requirements.

Figure 32: Master Parallel Mode Programming Switching Characteristics

XC5204-6TQ144C Xilinx Inc. IC FPGA 117 I/O 144TQFP
Product Obsolete or Under Obsolescence

Synchronous Peripheral Mode

Synchronous Peripheral mode can also be considered Slave Parallel mode. An external signal drives the CCLK input(s) of the FPGA(s). The first byte of parallel configuration data must be available at the Data inputs of the lead FPGA a short setup time before the rising CCLK edge. Subsequent data bytes are clocked in on every eighth consecutive rising CCLK edge.

The same CCLK edge that accepts data, also causes the RDY/$\overline{\text{BUSY}}$ output to go High for one CCLK period. The pin name is a misnomer. In Synchronous Peripheral mode it is really an ACKNOWLEDGE signal. Synchronous operation does not require this response, but it is a meaningful signal for test purposes. Note that RDY/$\overline{\text{BUSY}}$ is pulled High with a high-impedance pullup prior to $\overline{\text{INIT}}$ going High.

The lead FPGA serializes the data and presents the preamble data (and all data that overflows the lead device) on its DOUT pin. There is an internal delay of 1.5 CCLK periods, which means that DOUT changes on the falling CCLK edge, and the next FPGA in the daisy chain accepts data on the subsequent rising CCLK edge.

In order to complete the serial shift operation, 10 additional CCLK rising edges are required after the last data byte has been loaded, plus one more CCLK cycle for each daisy-chained device.

Synchronous Peripheral mode is selected by a <011> on the mode pins (M2, M1, M0).

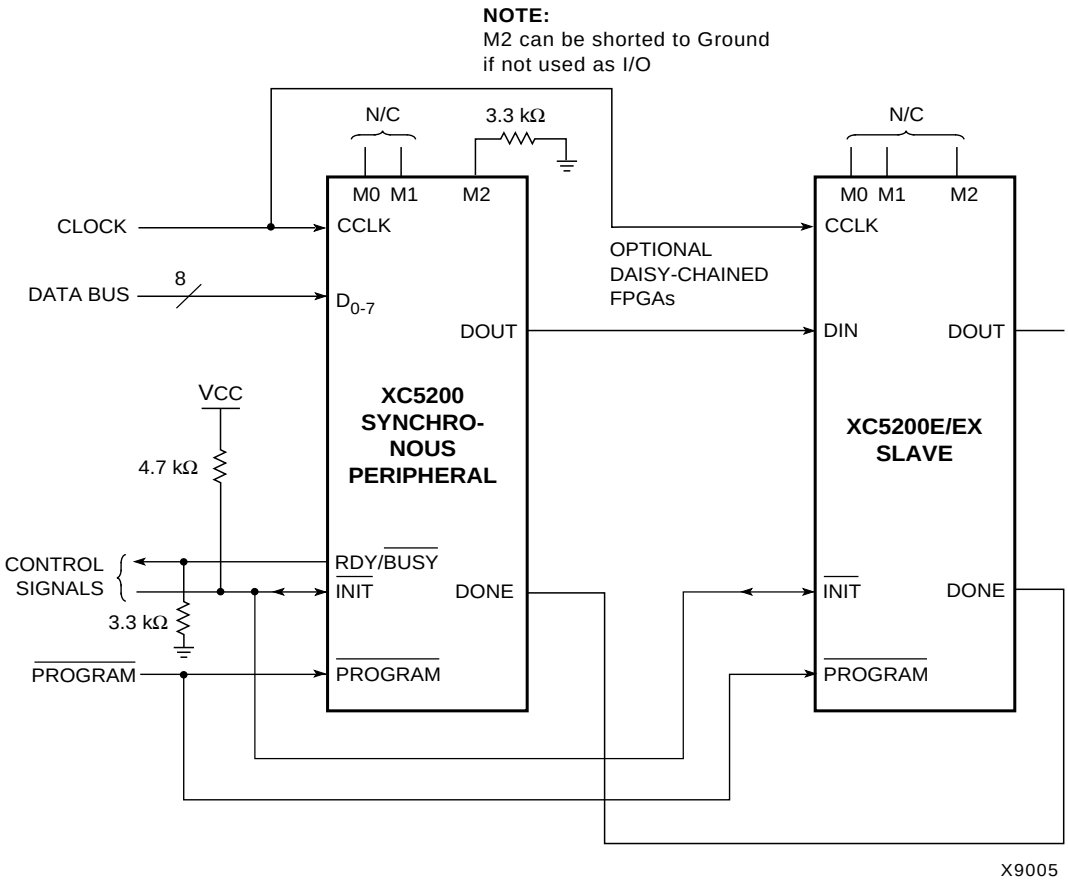

Figure 33: Synchronous Peripheral Mode Circuit Diagram

XC5204-6TQ144C Xilinx Inc. IC FPGA 117 I/O 144TQFP
Product Obsolete or Under Obsolescence

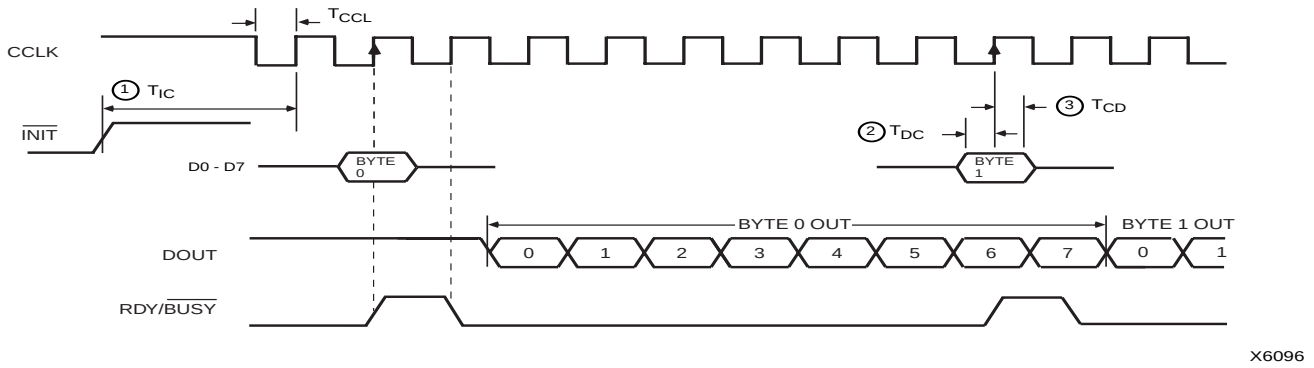

	Description	Symbol		Min	Max	Units
CCLK	INIT (High) setup time	1	T_{IC}	5		µs
	D0 - D7 setup time	2	T_{DC}	60		ns
	D0 - D7 hold time	3	T_{CD}	0		ns
	CCLK High time		T_{CCH}	50		ns
	CCLK Low time		T_{CCL}	60		ns
	CCLK Frequency		F_{CC}		8	MHz

Notes: 1. Peripheral Synchronous mode can be considered Slave Parallel mode. An external CCLK provides timing, clocking in the **first** data byte on the **second** rising edge of CCLK after INIT goes high. Subsequent data bytes are clocked in on every eighth consecutive rising edge of CCLK.
2. The RDY/BUSY line goes High for one CCLK period after data has been clocked in, although synchronous operation does not require such a response.
3. The pin name RDY/BUSY is a misnomer. In synchronous peripheral mode this is really an ACKNOWLEDGE signal.
4.Note that data starts to shift out serially on the DOUT pin 0.5 CCLK periods after it was loaded in parallel. Therefore, additional CCLK pulses are clearly required after the last byte has been loaded.

Figure 34: Synchronous Peripheral Mode Programming Switching Characteristics

XC5204-6TQ144C Xilinx Inc. IC FPGA 117 I/O 144TQFP
Product Obsolete or Under Obsolescence

Asynchronous Peripheral Mode

Write to FPGA

Asynchronous Peripheral mode uses the trailing edge of the logic AND condition of $\overline{WS}$ and $\overline{CS0}$ being Low and $\overline{RS}$ and CS1 being High to accept byte-wide data from a microprocessor bus. In the lead FPGA, this data is loaded into a double-buffered UART-like parallel-to-serial converter and is serially shifted into the internal logic.

The lead FPGA presents the preamble data (and all data that overflows the lead device) on its DOUT pin. The RDY/$\overline{BUSY}$ output from the lead FPGA acts as a handshake signal to the microprocessor. RDY/$\overline{BUSY}$ goes Low when a byte has been received, and goes High again when the byte-wide input buffer has transferred its information into the shift register, and the buffer is ready to receive new data. A new write may be started immediately, as soon as the RDY/$\overline{BUSY}$ output has gone Low, acknowledging receipt of the previous data. Write may not be terminated until RDY/$\overline{BUSY}$ is High again for one CCLK period. Note that RDY/$\overline{BUSY}$ is pulled High with a high-impedance pull-up prior to $\overline{INIT}$ going High.

The length of the $\overline{BUSY}$ signal depends on the activity in the UART. If the shift register was empty when the new byte was received, the $\overline{BUSY}$ signal lasts for only two CCLK periods. If the shift register was still full when the new byte was received, the $\overline{BUSY}$ signal can be as long as nine CCLK periods.

Note that after the last byte has been entered, only seven of its bits are shifted out. CCLK remains High with DOUT equal to bit 6 (the next-to-last bit) of the last byte entered.

The READY/$\overline{BUSY}$ handshake can be ignored if the delay from any one Write to the end of the next Write is guaranteed to be longer than 10 CCLK periods.

Status Read

The logic AND condition of the $\overline{CS0}$, CS1 and $\overline{RS}$ inputs puts the device status on the Data bus.

- D7 High indicates Ready
- D7 Low indicates Busy
- D0 through D6 go unconditionally High

It is mandatory that the whole start-up sequence be started and completed by one byte-wide input. Otherwise, the pins used as Write Strobe or Chip Enable might become active outputs and interfere with the final byte transfer. If this transfer does not occur, the start-up sequence is not completed all the way to the finish (point F in Figure 25 on page 109).

In this case, at worst, the internal reset is not released. At best, Readback and Boundary Scan are inhibited. The length-count value, as generated by the software, ensures that these problems never occur.

Although RDY/$\overline{BUSY}$ is brought out as a separate signal, microprocessors can more easily read this information on one of the data lines. For this purpose, D7 represents the RDY/$\overline{BUSY}$ status when $\overline{RS}$ is Low, $\overline{WS}$ is High, and the two chip select lines are both active.

Asynchronous Peripheral mode is selected by a <101> on the mode pins (M2, M1, M0).

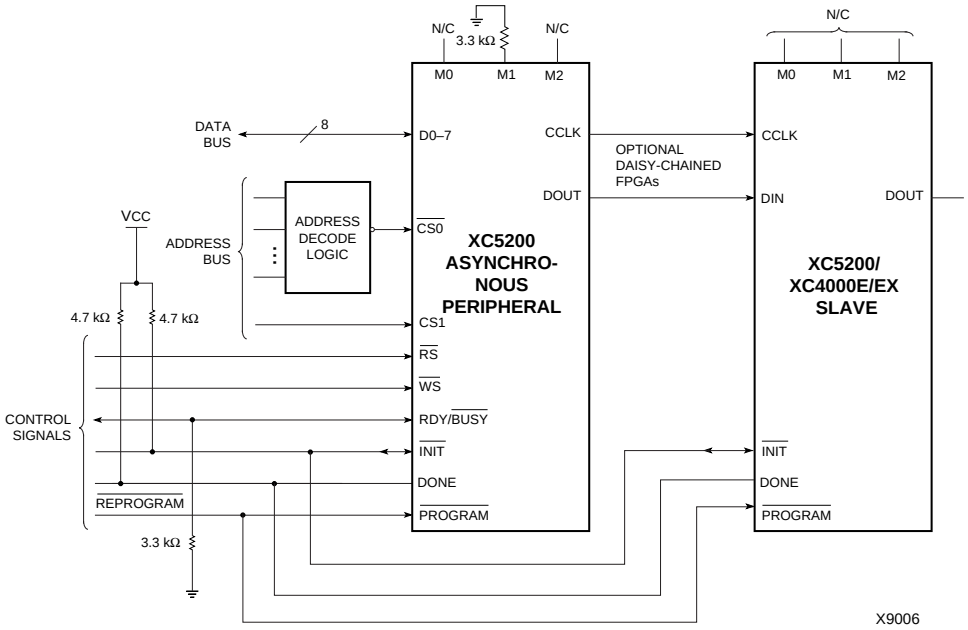

Figure 35: Asynchronous Peripheral Mode Circuit Diagram

XC5204-6TQ144C Xilinx Inc. IC FPGA 117 I/O 144TQFP
Product Obsolete or Under Obsolescence

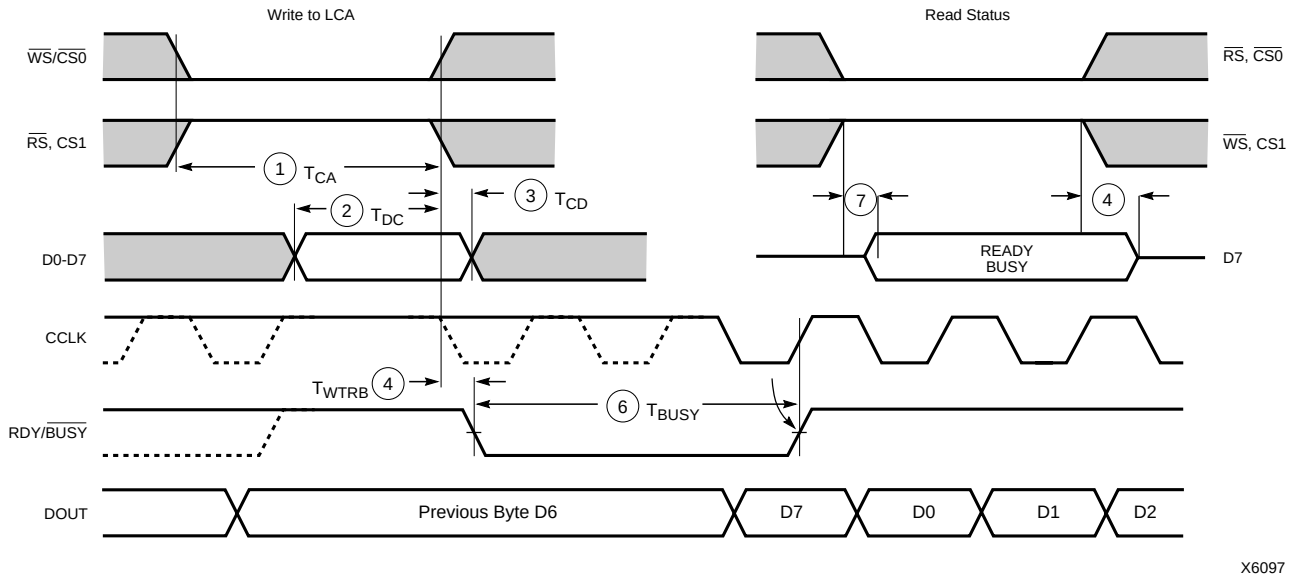

	Description	Symbol		Min	Max	Units
Write	Effective Write time ($\overline{CSO}$, $\overline{WS}$=Low; $\overline{RS}$, CS1=High	1	T_{CA}	100		ns
	DIN setup time	2	T_{DC}	60		ns
	DIN hold time	3	T_{CD}	0		ns
RDY	RDY/$\overline{BUSY}$ delay after end of Write or Read	4	T_{WTRB}		60	ns
	RDY/$\overline{BUSY}$ active after beginning of Read	7			60	ns
	RDY/$\overline{BUSY}$ Low output (Note 4)	6	T_{BUSY}	2	9	CCLK periods

Notes: 1. Configuration must be delayed until $\overline{INIT}$ pins of all daisy-chained FPGAs are high.
2. The time from the end of $\overline{WS}$ to CCLK cycle for the new byte of data depends on the completion of previous byte processing and the phase of internal timing generator for CCLK.
3. CCLK and DOUT timing is tested in slave mode.
4. T_{BUSY} indicates that the double-buffered parallel-to-serial converter is not yet ready to receive new data. The shortest T_{BUSY} occurs when a byte is loaded into an empty parallel-to-serial converter. The longest T_{BUSY} occurs when a new word is loaded into the input register before the second-level buffer has started shifting out data.

This timing diagram shows very relaxed requirements. Data need not be held beyond the rising edge of $\overline{WS}$. RDY/$\overline{BUSY}$ will go active within 60 ns after the end of $\overline{WS}$. A new write may be asserted immediately after RDY/$\overline{BUSY}$ goes Low, but write may not be terminated until RDY/$\overline{BUSY}$ has been High for one CCLK period.

Figure 36: Asynchronous Peripheral Mode Programming Switching Characteristics

XC5204-6TQ144C Xilinx Inc. IC FPGA 117 I/O 144TQFP
Product Obsolete or Under Obsolescence

Express Mode

Express mode is similar to Slave Serial mode, except that data is processed one byte per CCLK cycle instead of one bit per CCLK cycle. An external source is used to drive CCLK, while byte-wide data is loaded directly into the configuration data shift registers. A CCLK frequency of 10 MHz is equivalent to an 80 MHz serial rate, because eight bits of configuration data are loaded per CCLK cycle. Express mode does not support CRC error checking, but does support constant-field error checking.

In Express mode, an external signal drives the CCLK input of the FPGA device. The first byte of parallel configuration data must be available at the D inputs of the FPGA a short setup time before the second rising CCLK edge. Subsequent data bytes are clocked in on each consecutive rising CCLK edge.

If the first device is configured in Express mode, additional devices may be daisy-chained only if every device in the chain is also configured in Express mode. CCLK pins are tied together and D0-D7 pins are tied together for all devices along the chain. A status signal is passed from DOUT to CS1 of successive devices along the chain. The lead device in the chain has its CS1 input tied High (or floating, since there is an internal pullup). Frame data is accepted only when CS1 is High and the device's configuration memory is not already full. The status pin DOUT is pulled Low two internal-oscillator cycles after $\overline{\text{INIT}}$ is recognized as High, and remains Low until the device's configuration memory is full. DOUT is then pulled High to signal the next device in the chain to accept the configuration data on the D0-D7 bus.

The DONE pins of all devices in the chain should be tied together, with one or more active internal pull-ups. If a large number of devices are included in the chain, deactivate some of the internal pull-ups, since the Low-driving DONE pin of the last device in the chain must sink the current from all pull-ups in the chain. The DONE pull-up is activated by default. It can be deactivated using an option in the bitstream generation software.

XC5200 devices in Express mode are always synchronized to DONE. The device becomes active after DONE goes High. DONE is an open-drain output. With the DONE pins tied together, therefore, the external DONE signal stays low until all devices are configured, then all devices in the daisy chain become active simultaneously. If the DONE pin of a device is left unconnected, the device becomes active as soon as that device has been configured.

Express mode is selected by a <010> on the mode pins (M2, M1, M0).

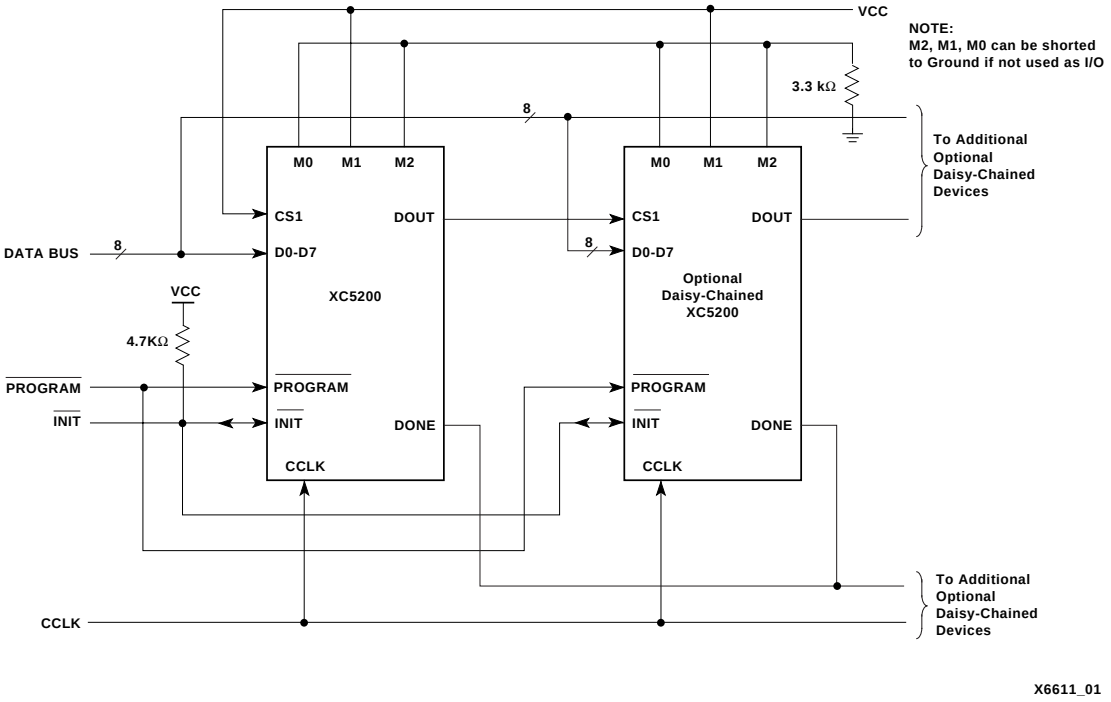

Figure 37: Express Mode Circuit Diagram

XC5204-6TQ144C Xilinx Inc. IC FPGA 117 I/O 144TQFP
Product Obsolete or Under Obsolescence

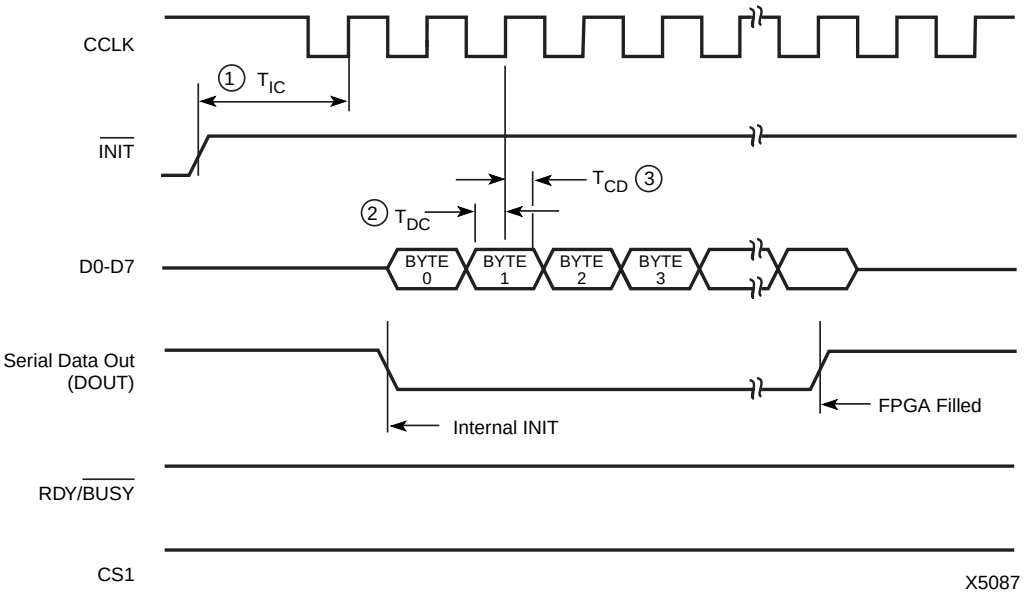

	Description	Symbol		Min	Max	Units
CCLK	INIT (High) Setup time required	1	T_{IC}	5		µs
	DIN Setup time required	2	T_{DC}	30		ns
	DIN hold time required	3	T_{CD}	0		ns
	CCLK High time		T_{CCH}	30		ns
	CCLK Low time		T_{CCL}	30		ns
	CCLK frequency		F_{CC}		10	MHz

Note: If not driven by the preceding DOUT, CS1 must remain high until the device is fully configured.

Figure 38: Express Mode Programming Switching Characteristics

XC5204-6TQ144C Xilinx Inc. IC FPGA 117 I/O 144TQFP
Product Obsolete or Under Obsolescence

Table 13. Pin Functions During Configuration

CONFIGURATION MODE: <M2:M1:M0>							USER OPERATION
SLAVE <1:1:1>	MASTER-SER <0:0:0>	SYN.PERIPH <0:1:1>	ASYN.PERIPH <1:0:1>	MASTER-HIGH <1:1:0>	MASTER-LOW <1:0:0>	EXPRESS <0:1:0>	
				A16	A16		GCK1-I/O
				A17	A17		I/O
TDI	TDI	TDI	TDI	TDI	TDI	TDI	TDI-I/O
TCK	TCK	TCK	TCK	TCK	TCK	TCK	TCK-I/O
TMS	TMS	TMS	TMS	TMS	TMS	TMS	TMS-I/O
							I/O
M1 (HIGH) (I)	M1 (LOW) (I)	M1 (HIGH) (I)	M1 (LOW) (I)	M1 (HIGH) (I)	M1 (LOW) (I)	M1 (HIGH) (I)	I/O
M0 (HIGH) (I)	M0 (LOW) (I)	M0 (HIGH) (I)	M0 (HIGH) (I)	M0 (LOW) (I)	M0 (LOW) (I)	M0 (LOW) (I)	I/O
M2 (HIGH) (I)	M2 (LOW) (I)	M2 (LOW) (I)	M2 (HIGH) (I)	M2 (HIGH) (I)	M2 (HIGH) (I)	M2 (LOW) (I)	I/O
							GCK2-I/O
HDC (HIGH)	HDC (HIGH)	HDC (HIGH)	HDC (HIGH)	HDC (HIGH)	HDC (HIGH)	HDC (HIGH)	I/O
LDC (LOW)	LDC (LOW)	LDC (LOW)	LDC (LOW)	LDC (LOW)	LDC (LOW)	LDC (LOW)	I/O
$\overline{\text{INIT-ERROR}}$	$\overline{\text{INIT-ERROR}}$	$\overline{\text{INIT-ERROR}}$	$\overline{\text{INIT-ERROR}}$	$\overline{\text{INIT-ERROR}}$	$\overline{\text{INIT-ERROR}}$	$\overline{\text{INIT-ERROR}}$	I/O
							I/O
DONE	DONE	DONE	DONE	DONE	DONE	DONE	DONE
$\overline{\text{PROGRAM}}$ (I)	$\overline{\text{PROGRAM}}$ (I)	$\overline{\text{PROGRAM}}$ (I)	$\overline{\text{PROGRAM}}$ (I)	$\overline{\text{PROGRAM}}$ (I)	$\overline{\text{PROGRAM}}$ (I)	$\overline{\text{PROGRAM}}$ (I)	$\overline{\text{PROGRAM}}$
		DATA 7 (I)	DATA 7 (I)	DATA 7 (I)	DATA 7 (I)	DATA 7 (I)	I/O
							GCK3-I/O
		DATA 6 (I)	DATA 6 (I)	DATA 6 (I)	DATA 6 (I)	DATA 6 (I)	I/O
		DATA 5 (I)	DATA 5 (I)	DATA 5 (I)	DATA 5 (I)	DATA 5 (I)	I/O
			$\overline{\text{CSO}}$ (I)				I/O
		DATA 4 (I)	DATA 4 (I)	DATA 4 (I)	DATA 4 (I)	DATA 4 (I)	I/O
		DATA 3 (I)	DATA 3 (I)	DATA 3 (I)	DATA 3 (I)	DATA 3 (I)	I/O
			$\overline{\text{RS}}$ (I)				I/O
		DATA 2 (I)	DATA 2 (I)	DATA 2 (I)	DATA 2 (I)	DATA 2 (I)	I/O
		DATA 1 (I)	DATA 1 (I)	DATA 1 (I)	DATA 1 (I)	DATA 1 (I)	I/O
		RDY/$\overline{\text{BUSY}}$	RDY/$\overline{\text{BUSY}}$	RCLK	RCLK		I/O
DIN (I)	DIN (I)	DATA 0 (I)	DATA 0 (I)	DATA 0 (I)	DATA 0 (I)	DATA 0 (I)	I/O
DOUT	DOUT	DOUT	DOUT	DOUT	DOUT	DOUT	I/O
CCLK (I)	CCLK (O)	CCLK (I)	CCLK (O)	CCLK (O)	CCLK (O)	CCLK (I)	CCLK (I)
TDO	TDO	TDO	TDO	TDO	TDO	TDO	TDO-I/O
			$\overline{\text{WS}}$ (I)	A0	A0		I/O
				A1	A1		GCK4-I/O
			CS1 (I)	A2	A2	CS1 (I)	I/O
				A3	A3		I/O
				A4	A4		I/O
				A5	A5		I/O
				A6	A6		I/O
				A7	A7		I/O
				A8	A8		I/O
				A9	A9		I/O
				A10	A10		I/O
				A11	A11		I/O
				A12	A12		I/O
				A13	A13		I/O
				A14	A14		I/O
				A15	A15		I/O
							ALL OTHERS

Notes: 1. A shaded table cell represents a 20-kΩ to 100-kΩ pull-up resistor before and during configuration.
2. (I) represents an input (O) represents an output.
3. INIT is an open-drain output during configuration.

XC5204-6TQ144C Xilinx Inc. IC FPGA 117 I/O 144TQFP
Product Obsolete or Under Obsolescence

Configuration Switching Characteristics

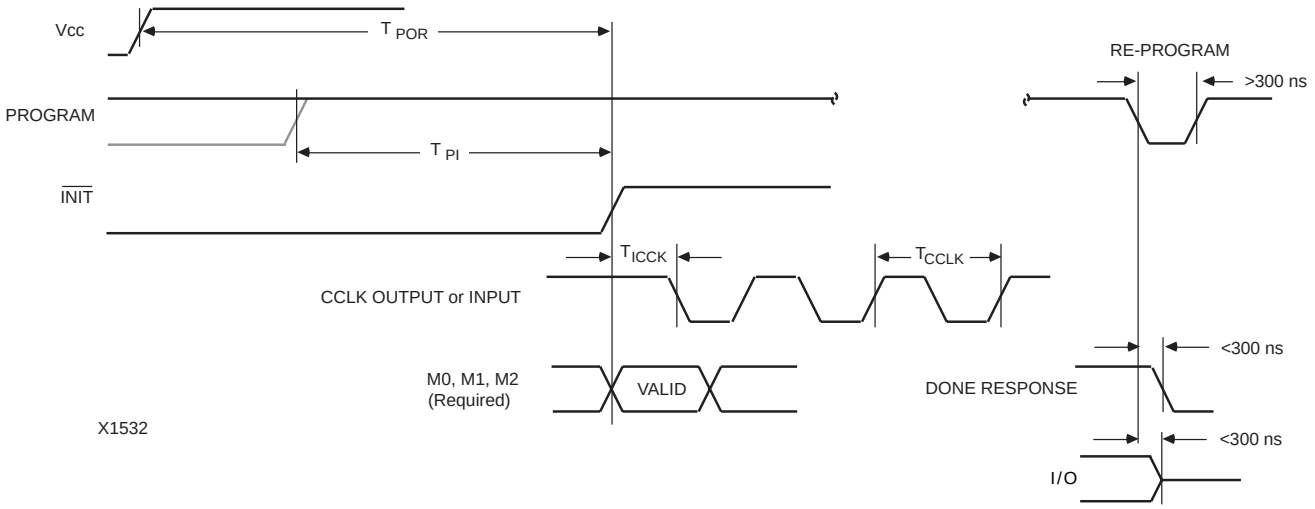

Master Modes

Description	Symbol	Min	Max	Units
Power-On-Reset	T_{POR}	2	15	ms
Program Latency	T_{PI}	6	70	µs per CLB column
CCLK (output) Delay period (slow) period (fast)	T_{ICCK} T_{CCLK} T_{CCLK}	40 640 100	375 3000 375	µs ns ns

Slave and Peripheral Modes

Description	Symbol	Min	Max	Units
Power-On-Reset	T_{POR}	2	15	ms
Program Latency	T_{PI}	6	70	µs per CLB column
CCLK (input) Delay (required) period (required)	T_{ICCK} T_{CCLK}	5 100		µs ns

Note: At power-up, V_{CC} must rise from 2.0 to V_{CC} min in less than 15 ms, otherwise delay configuration using $\overline{\text{PROGRAM}}$ until V_{CC} is valid.

XC5204-6TQ144C Xilinx Inc. IC FPGA 117 I/O 144TQFP
Product Obsolete or Under Obsolescence

XC5200 Program Readback Switching Characteristic Guidelines

Testing of the switching parameters is modeled after testing methods specified by MIL-M-38510/605. All devices are 100% functionally tested. Internal timing parameters are not measured directly. They are derived from benchmark timing patterns that are taken at device introduction, prior to any process improvements.

The following guidelines reflect worst-case values over the recommended operating conditions.

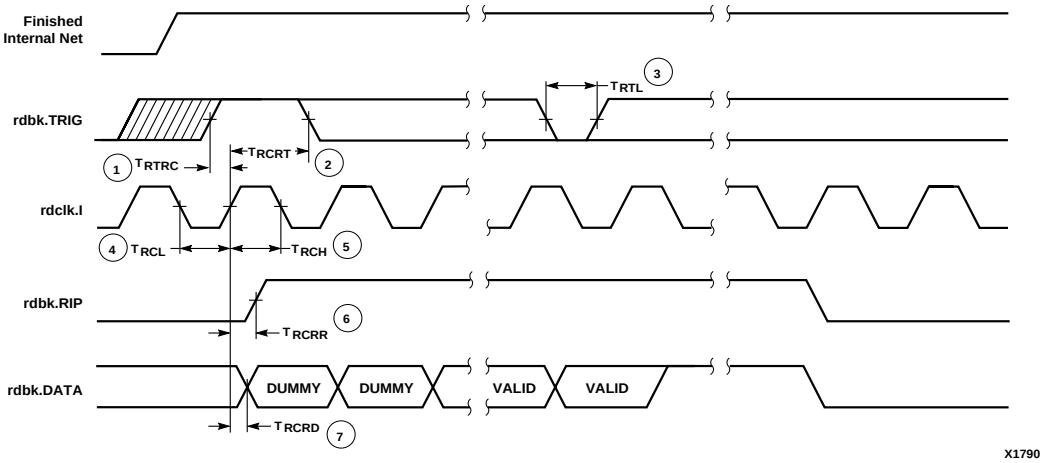

	Description	Symbol		Min	Max	Units
rdbk.TRIG	rdbk.TRIG setup to initiate and abort Readback	1	T_{RTRC}	200	-	ns
	rdbk.TRIG hold to initiate and abort Readback	2	T_{RCRT}	50	-	ns
rdclk.1	rdbk.DATA delay	7	T_{RCRD}	-	250	ns
	rdbk.RIP delay	6	T_{RCRR}	-	250	ns
	High time	5	T_{RCH}	250	500	ns
	Low time	4	T_{RCL}	250	500	ns

Note 1: Timing parameters apply to all speed grades.

Note 2: rdbk.TRIG is High prior to Finished, Finished will trigger the first Readback

XC5204-6TQ144C Xilinx Inc. IC FPGA 117 I/O 144TQFP
Product Obsolete or Under Obsolescence

XC5200 Switching Characteristics

Definition of Terms

In the following tables, some specifications may be designated as Advance or Preliminary. These terms are defined as follows:

Advance: Initial estimates based on simulation and/or extrapolation from other speed grades, devices, or device families. Use as estimates, not for production.
Preliminary: Based on preliminary characterization. Further changes are not expected.
Unmarked: Specifications not identified as either Advance or Preliminary are to be considered Final.[1]

XC5200 Operating Conditions

Symbol	Description	Min	Max	Units
V_{CC}	Supply voltage relative to GND Commercial: 0°C to 85°C junction	4.75	5.25	V
	Supply voltage relative to GND Industrial: -40°C to 100°C junction	4.5	5.5	V
V_{IHT}	High-level input voltage — TTL configuration	2.0	V_{CC}	V
V_{ILT}	Low-level input voltage — TTL configuration	0	0.8	V
V_{IHC}	High-level input voltage — CMOS configuration	70%	100%	V_{CC}
V_{ILC}	Low-level input voltage — CMOS configuration	0	20%	V_{CC}
T_{IN}	Input signal transition time		250	ns

XC5200 DC Characteristics Over Operating Conditions

Symbol	Description	Min	Max	Units
V_{OH}	High-level output voltage @ I_{OH} = -8.0 mA, V_{CC} min	3.86		V
V_{OL}	Low-level output voltage @ I_{OL} = 8.0 mA, V_{CC} max		0.4	V
I_{CCO}	Quiescent FPGA supply current (Note 1)		15	mA
I_{IL}	Leakage current	-10	+10	µA
C_{IN}	Input capacitance (sample tested)		15	pF
I_{RIN}	Pad pull-up (when selected) @ V_{IN} = 0V (sample tested)	0.02	0.30	mA

Note: 1. With no output current loads, all package pins at Vcc or GND, either TTL or CMOS inputs, and the FPGA configured with a tie option.

XC5200 Absolute Maximum Ratings

Symbol	Description		Units
V_{CC}	Supply voltage relative to GND	-0.5 to +7.0	V
V_{IN}	Input voltage with respect to GND	-0.5 to V_{CC} +0.5	V
V_{TS}	Voltage applied to 3-state output	-0.5 to V_{CC} +0.5	V
T_{STG}	Storage temperature (ambient)	-65 to +150	°C
T_{SOL}	Maximum soldering temperature (10 s @ 1/16 in. = 1.5 mm)	+260	°C
T_J	Junction temperature in plastic packages	+125	°C
	Junction temperature in ceramic packages	+150	°C

Note: Stresses beyond those listed under Absolute Maximum Ratings may cause permanent damage to the device. These are stress ratings only, and functional operation of the device at these or any other conditions beyond those listed under Recommended Operating Conditions is not implied. Exposure to Absolute Maximum Ratings conditions for extended periods of time may affect device reliability.

1. Notwithstanding the definition of the above terms, all specifications are subject to change without notice.

XC5204-6TQ144C Xilinx Inc. IC FPGA 117 I/O 144TQFP
Product Obsolete or Under Obsolescence

XC5200 Global Buffer Switching Characteristic Guidelines

Testing of the switching parameters is modeled after testing methods specified by MIL-M-38510/605. All devices are 100% functionally tested. Since many internal timing parameters cannot be measured directly, they are derived from benchmark timing patterns. The following guidelines reflect worst-case values over the recommended operating conditions. For more detailed, more precise, and more up-to-date timing information, use the values provided by the timing calculator and used in the simulator.

		Speed Grade	-6	-5	-4	-3
Description	**Symbol**	**Device**	**Max (ns)**	**Max (ns)**	**Max (ns)**	**Max (ns)**
Global Signal Distribution From pad through global buffer, to any clock (CK)	T_{BUFG}	XC5202	9.1	8.5	8.0	6.9
		XC5204	9.3	8.7	8.2	7.6
		XC5206	9.4	8.8	8.3	7.7
		XC5210	9.4	8.8	8.5	7.7
		XC5215	10.5	9.9	9.8	9.6

XC5200 Longline Switching Characteristic Guidelines

Testing of the switching parameters is modeled after testing methods specified by MIL-M-38510/605. All devices are 100% functionally tested. Since many internal timing parameters cannot be measured directly, they are derived from benchmark timing patterns. The following guidelines reflect worst-case values over the recommended operating conditions. For more detailed, more precise, and more up-to-date timing information, use the values provided by the timing calculator and used in the simulator.

		Speed Grade	-6	-5	-4	-3
Description	**Symbol**	**Device**	**Max (ns)**	**Max (ns)**	**Max (ns)**	**Max (ns)**
TBUF driving a Longline 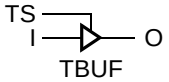 I to Longline, while TS is Low; i.e., buffer is constantly active	T_{IO}	XC5202	6.0	3.8	3.0	2.0
		XC5204	6.4	4.1	3.2	2.3
		XC5206	6.6	4.2	3.3	2.7
		XC5210	6.6	4.2	3.3	2.9
		XC5215	7.3	4.6	3.8	3.2
TS going Low to Longline going from floating High or Low to active Low or High	T_{ON}	XC5202	7.8	5.6	4.7	4.0
		XC5204	8.3	5.9	4.9	4.3
		XC5206	8.4	6.0	5.0	4.4
		XC5210	8.4	6.0	5.0	4.4
		XC5215	8.9	6.3	5.3	4.5
TS going High to TBUF going inactive, not driving Longline	T_{OFF}	XC52xx	3.0	2.8	2.6	2.4

Note: 1. Die-size-dependent parameters are based upon XC5215 characterization. Production specifications will vary with array size.

XC5204-6TQ144C Xilinx Inc. IC FPGA 117 I/O 144TQFP
Product Obsolete or Under Obsolescence

XC5200 CLB Switching Characteristic Guidelines

Testing of the switching parameters is modeled after testing methods specified by MIL-M-38510/605. All devices are 100% functionally tested. Since many internal timing parameters cannot be measured directly, they are derived from benchmark timing patterns. The following guidelines reflect worst-case values over the recommended operating conditions. For more detailed, more precise, and more up-to-date timing information, use the values provided by the timing calculator and used in the simulator.

Speed Grade		-6		-5		-4		-3	
Description	**Symbol**	**Min (ns)**	**Max (ns)**	**Min (ns)**	**Max (ns)**	**Min (ns)**	**Max (ns)**	**Min (ns)**	**Max (ns)**
Combinatorial Delays									
F inputs to X output	T_{ILO}		5.6		4.6		3.8		3.0
F inputs via transparent latch to Q	T_{ITO}		8.0		6.6		5.4		4.3
DI inputs to DO output (Logic-Cell Feedthrough)	T_{IDO}		4.3		3.5		2.8		2.4
F inputs via F5_MUX to DO output	T_{IMO}		7.2		5.8		5.0		4.3
Carry Delays									
Incremental delay per bit	T_{CY}		0.7		0.6		0.5		0.5
Carry-in overhead from DI	T_{CYDI}		1.8		1.6		1.5		1.4
Carry-in overhead from F	T_{CYL}		3.7		3.2		2.9		2.4
Carry-out overhead to DO	T_{CYO}		4.0		3.2		2.5		2.1
Sequential Delays									
Clock (CK) to out (Q) (Flip-Flop)	T_{CKO}		5.8		4.9		4.0		4.0
Gate (Latch enable) going active to out (Q)	T_{GO}		9.2		7.4		5.9		5.5
Set-up Time Before Clock (CK)									
F inputs	T_{ICK}	2.3		1.8		1.4		1.3	
F inputs via F5_MUX	T_{MICK}	3.8		3.0		2.5		2.4	
DI input	T_{DICK}	0.8		0.5		0.4		0.4	
CE input	T_{EICK}	1.6		1.2		0.9		0.9	
Hold Times After Clock (CK)									
F inputs	T_{CKI}	0		0		0		0	
F inputs via F5_MUX	T_{CKMI}	0		0		0		0	
DI input	T_{CKDI}	0		0		0		0	
CE input	T_{CKEI}	0		0		0		0	
Clock Widths									
Clock High Time	T_{CH}	6.0		6.0		6.0		6.0	
Clock Low Time	T_{CL}	6.0		6.0		6.0		6.0	
Toggle Frequency (MHz) (Note 3)	F_{TOG}		83		83		83		83
Reset Delays									
Width (High)	T_{CLRW}	6.0		6.0		6.0		6.0	
Delay from CLR to Q (Flip-Flop)	T_{CLR}		7.7		6.3		5.1		4.0
Delay from CLR to Q (Latch)	T_{CLRL}		6.5		5.2		4.2		3.0
Global Reset Delays									
Width (High)	T_{GCLRW}	6.0		6.0		6.0		6.0	
Delay from internal GR to Q	T_{GCLR}		14.7		12.1		9.1		8.0

Note:
1. The CLB K to Q output delay (T_{CKO}) of any CLB, plus the shortest possible interconnect delay, is always longer than the Data In hold-time requirement (T_{CKDI}) of any CLB on the same die.
2. Timing is based upon the XC5215 device. For other devices, see Timing Calculator.
3. Maximum flip-flop toggle rate for export control purposes.

XC5204-6TQ144C Xilinx Inc. IC FPGA 117 I/O 144TQFP
Product Obsolete or Under Obsolescence

XC5200 Guaranteed Input and Output Parameters (Pin-to-Pin)

All values listed below are tested directly, and guaranteed over the operating conditions. The same parameters can also be derived indirectly from the Global Buffer specifications. The delay calculator uses this indirect method, and may overestimate because of worst-case assumptions. When there is a discrepancy between these two methods, the values listed below should be used, and the derived values should be considered conservative overestimates.

		Speed Grade	-6	-5	-4	-3
Description	**Symbol**	**Device**	**Max (ns)**	**Max (ns)**	**Max (ns)**	**Max (ns)**
Global Clock to Output Pad (fast) 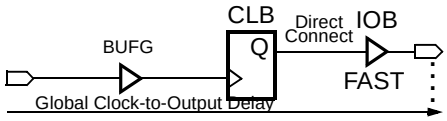	T_{ICKOF} (Max)	XC5202	16.9	15.1	10.9	9.8
		XC5204	17.1	15.3	11.3	9.9
		XC5206	17.2	15.4	11.9	10.8
		XC5210	17.2	15.4	12.8	11.2
		XC5215	19.0	17.0	12.8	11.7
Global Clock to Output Pad (slew-limited) 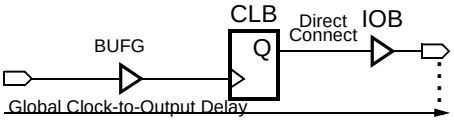	T_{ICKO} (Max)	XC5202	21.4	18.7	12.6	11.5
		XC5204	21.6	18.9	13.3	11.9
		XC5206	21.7	19.0	13.6	12.5
		XC5210	21.7	19.0	15.0	12.9
		XC5215	24.3	21.2	15.0	13.1
Input Set-up Time (no delay) to CLB Flip-Flop 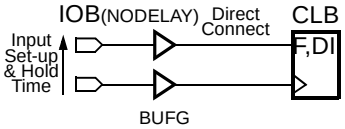	T_{PSUF} (Min)	XC5202	2.5	2.0	1.9	1.9
		XC5204	2.3	1.9	1.9	1.9
		XC5206	2.2	1.9	1.9	1.9
		XC5210	2.2	1.9	1.9	1.8
		XC5215	2.0	1.8	1.7	1.7
Input Hold Time (no delay) to CLB Flip-Flop 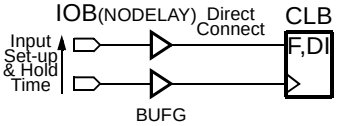	T_{PHF} (Min)	XC5202	3.8	3.8	3.5	3.5
		XC5204	3.9	3.9	3.8	3.6
		XC5206	4.4	4.4	4.4	4.3
		XC5210	5.1	5.1	4.9	4.8
		XC5215	5.8	5.8	5.7	5.6
Input Set-up Time (with delay) to CLB Flip-Flop DI Input 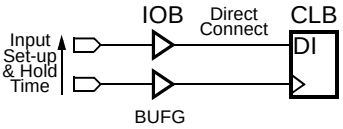	T_{PSU}	XC5202	7.3	6.6	6.6	6.6
		XC5204	7.3	6.6	6.6	6.6
		XC5206	7.2	6.5	6.4	6.3
		XC5210	7.2	6.5	6.0	6.0
		XC5215	6.8	5.7	5.7	5.7
Input Set-up Time (with delay) to CLB Flip-Flop F Input 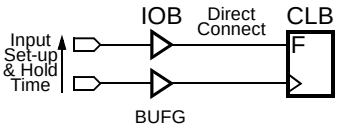	T_{PSUL} (Min)	XC5202	8.8	7.7	7.5	7.5
		XC5204	8.6	7.5	7.5	7.5
		XC5206	8.5	7.4	7.4	7.4
		XC5210	8.5	7.4	7.4	7.3
		XC5215	8.5	7.4	7.4	7.2
Input Hold Time (with delay) to CLB Flip-Flop 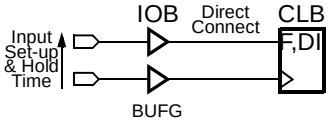	T_{PH} (Min)	XC52xx	0	0	0	0

Note: 1. These measurements assume that the CLB flip-flop uses a direct interconnect to or from the IOB. The INREG/ OUTREG properties, or XACT-Performance, can be used to assure that direct connects are used. t_{PSU} applies only to the CLB input DI that bypasses the look-up table, which only offers direct connects to IOBs on the left and right edges of the die. t_{PSUL} applies to the CLB inputs F that feed the look-up table, which offers direct connect to IOBs on all four edges, as do the CLB Q outputs.
2. When testing outputs (fast or slew-limited), half of the outputs on one side of the device are switching.

XC5204-6TQ144C Xilinx Inc. IC FPGA 117 I/O 144TQFP
Product Obsolete or Under Obsolescence

XC5200 IOB Switching Characteristic Guidelines

Testing of the switching parameters is modeled after testing methods specified by MIL-M-38510/605. All devices are 100% functionally tested. Since many internal timing parameters cannot be measured directly, they are derived from benchmark timing patterns. The following guidelines reflect worst-case values over the recommended operating conditions. For more detailed, more precise, and more up-to-date timing information, use the values provided by the timing calculator and used in the simulator.

Speed Grade		-6	-5	-4	-3
Description	**Symbol**	**Max (ns)**	**Max (ns)**	**Max (ns)**	**Max (ns)**
Input					
Propagation Delays from CMOS or TTL Levels					
Pad to I (no delay)	T_{PI}	5.7	5.0	4.8	3.3
Pad to I (with delay)	T_{PID}	11.4	10.2	10.2	9.5
Output					
Propagation Delays to CMOS or TTL Levels					
Output (O) to Pad (fast)	T_{OPF}	4.6	4.5	4.5	3.5
Output (O) to Pad (slew-limited)	T_{OPS}	9.5	8.4	8.0	5.0
From clock (CK) to output pad (fast), using direct connect between Q and output (O)	T_{OKPOF}	10.1	9.3	8.3	7.5
From clock (CK) to output pad (slew-limited), using direct connect between Q and output (O)	T_{OKPOS}	14.9	13.1	11.8	10.0
3-state to Pad active (fast)	T_{TSONF}	5.6	5.2	4.9	4.6
3-state to Pad active (slew-limited)	T_{TSONS}	10.4	9.0	8.3	6.0
Internal GTS to Pad active	T_{GTS}	17.7	15.9	14.7	13.5

Note:
1. Timing is measured at pin threshold, with 50-pF external capacitance loads. **Slew-limited** output rise/fall times are approximately two times longer than **fast** output rise/fall times.
2. Unused and unbonded IOBs are configured by default as inputs with internal pull-up resistors.
3. Timing is based upon the XC5215 device. For other devices, see Timing Calculator.

XC5204-6TQ144C Xilinx Inc. IC FPGA 117 I/O 144TQFP
Product Obsolete or Under Obsolescence

XC5200 Boundary Scan (JTAG) Switching Characteristic Guidelines

The following guidelines reflect worst-case values over the recommended operating conditions. They are expressed in units of nanoseconds and apply to all XC5200 devices unless otherwise noted.

Speed Grade		-6		-5		-4		-3	
Description	**Symbol**	**Min**	**Max**	**Min**	**Max**	**Min**	**Max**	**Min**	**Max**
Setup and Hold									
Input (TDI) to clock (TCK) setup time	T_{TDITCK}	30.0		30.0		30.0		30.0	
Input (TDI) to clock (TCK) hold time	T_{TCKTDI}	0		0		0		0	
Input (TMS) to clock (TCK) setup time	T_{TMSTCK}	15.0		15.0		15.0		15.0	
Input (TMS) to clock (TCK) hold time	T_{TCKTMS}	0		0		0		0	
Propagation Delay									
Clock (TCK) to Pad (TDO)	T_{TCKPO}		30.0		30.0		30.0		30.0
Clock									
Clock (TCK) High	T_{TCKH}	30.0		30.0		30.0		30.0	
Clock (TCK) Low	T_{TCKL}	30.0		30.0		30.0		30.0	
F_{MAX} (MHz)	F_{MAX}		10.0		10.0		10.0		10.0

Note 1: Input pad setup and hold times are specified with respect to the internal clock.

XC5204-6TQ144C Xilinx Inc. IC FPGA 117 I/O 144TQFP
Product Obsolete or Under Obsolescence

Device-Specific Pinout Tables

Device-specific tables include all packages for each XC5200-Series device. They follow the pad locations around the die, and include boundary scan register locations.

Pin Locations for XC5202 Devices

The following table may contain pinout information for unsupported device/package combinations. Please see the availability charts elsewhere in the XC5200 Series data sheet for availability information.

Pin	Description	VQ64*	PC84	PQ100	VQ100	TQ144	PG156	Boundary Scan Order
	VCC	-	2	92	89	128	H3	-
1.	I/O (A8)	57	3	93	90	129	H1	51
2.	I/O (A9)	58	4	94	91	130	G1	54
3.	I/O	-	-	95	92	131	G2	57
4.	I/O	-	-	96	93	132	G3	63
5.	I/O (A10)	-	5	97	94	133	F1	66
6.	I/O (A11)	59	6	98	95	134	F2	69
	GND	-	-	-	-	137	F3	-
7.	I/O (A12)	60	7	99	96	138	E3	78
8.	I/O (A13)	61	8	100	97	139	C1	81
9.	I/O (A14)	62	9	1	98	142	B1	90
10.	I/O (A15)	63	10	2	99	143	B2	93
	VCC	64	11	3	100	144	C3	-
	GND	-	12	4	1	1	C4	-
11.	GCK1 (A16, I/O)	1	13	5	2	2	B3	102
12.	I/O (A17)	2	14	6	3	3	A1	105
13.	I/O (TDI)	3	15	7	4	6	B4	111
14.	I/O (TCK)	4	16	8	5	7	A3	114
	GND	-	-	-	-	8	C6	-
15.	I/O (TMS)	5	17	9	6	11	A5	117
16.	I/O	6	18	10	7	12	C7	123
17.	I/O	-	-	-	-	13	B7	126
18.	I/O	-	-	11	8	14	A6	129
19.	I/O	-	19	12	9	15	A7	135
20.	I/O	7	20	13	10	16	A8	138
	GND	8	21	14	11	17	C8	-
	VCC	9	22	15	12	18	B8	-
21.	I/O	-	23	16	13	19	C9	141
22.	I/O	10	24	17	14	20	B9	147
23.	I/O		-	18	15	21	A9	150
24.	I/O		-	-	-	22	B10	153
25.	I/O	-	25	19	16	23	C10	159
26.	I/O	11	26	20	17	24	A10	162
	GND		-	-	-	27	C11	-
27.	I/O	12	27	21	18	28	B12	165
28.	I/O		-	22	19	29	A13	171
29.	I/O	13	28	23	20	32	B13	174
30.	I/O	14	29	24	21	33	B14	177
31.	M1 (I/O)	15	30	25	22	34	A15	186
	GND	-	31	26	23	35	C13	-
32.	M0 (I/O)	16	32	27	24	36	A16	189
	VCC	-	33	28	25	37	C14	-
33.	M2 (I/O)	17	34	29	26	38	B15	192
34.	GCK2 (I/O)	18	35	30	27	39	B16	195

XC5204-6TQ144C Xilinx Inc. IC FPGA 117 I/O 144TQFP
Product Obsolete or Under Obsolescence

Pin	Description	VQ64*	PC84	PQ100	VQ100	TQ144	PG156	Boundary Scan Order
35.	I/O (HDC)	19	36	31	28	40	D14	204
36.	I/O	-	-	32	29	43	E14	207
37.	I/O (LDC)	20	37	33	30	44	C16	210
	GND	-	-	-	-	45	F14	-
38.	I/O	-	38	34	31	48	F16	216
39.	I/O	21	39	35	32	49	G14	219
40.	I/O	-	-	36	33	50	G15	222
41.	I/O	-	-	37	34	51	G16	228
42.	I/O	22	40	38	35	52	H16	231
43.	I/O ($\overline{ERR}$, $\overline{INIT}$)	23	41	39	36	53	H15	234
	VCC	24	42	40	37	54	H14	-
	GND	25	43	41	38	55	J14	-
44.	I/O	26	44	42	39	56	J15	240
45.	I/O	27	45	43	40	57	J16	243
46.	I/O	-	-	44	41	58	K16	246
47.	I/O	-	-	45	42	59	K15	252
48.	I/O	28	46	46	43	60	K14	255
49.	I/O	29	47	47	44	61	L16	258
	GND	-	-	-	-	64	L14	-
50.	I/O	-	48	48	45	65	P16	264
51.	I/O	30	49	49	46	66	M14	267
52.	I/O	-	50	50	47	69	N14	276
53.	I/O	31	51	51	48	70	R16	279
	GND	-	52	52	49	71	P14	-
	DONE	32	53	53	50	72	R15	-
	VCC	33	54	54	51	73	P13	-
	PROG	34	55	55	52	74	R14	-
54.	I/O (D7)	35	56	56	53	75	T16	288
55.	GCK3 (I/O)	36	57	57	54	76	T15	291
56.	I/O (D6)	37	58	58	55	79	T14	300
57.	I/O	-	-	59	56	80	T13	303
	GND	-	-	-	-	81	P11	-
58.	I/O (D5)	38	59	60	57	84	T10	306
59.	I/O ($\overline{CS0}$)	-	60	61	58	85	P10	312
60.	I/O	-	-	62	59	86	R10	315
61.	I/O	-	-	63	60	87	T9	318
62.	I/O (D4)	39	61	64	61	88	R9	324
63.	I/O	-	62	65	62	89	P9	327
	VCC	40	63	66	63	90	R8	-
	GND	41	64	67	64	91	P8	-
64.	I/O (D3)	42	65	68	65	92	T8	336
65.	I/O ($\overline{RS}$)	43	66	69	66	93	T7	339
66.	I/O	-	-	70	67	94	T6	342
67.	I/O	-	-	-	-	95	R7	348
68.	I/O (D2)	44	67	71	68	96	P7	351
69.	I/O	-	68	72	69	97	T5	360
	GND	-	-	-	-	100	P6	-
70.	I/O (D1)	45	69	73	70	101	T3	363
71.	I/O ($\overline{RCLK}$-$\overline{BUSY}$/RDY)	-	70	74	71	102	P5	366
72.	I/O (D0, DIN)	46	71	75	72	105	P4	372
73.	I/O (DOUT)	47	72	76	73	106	T2	375

XC5204-6TQ144C Xilinx Inc. IC FPGA 117 I/O 144TQFP
Product Obsolete or Under Obsolescence

Pin	Description	VQ64*	PC84	PQ100	VQ100	TQ144	PG156	Boundary Scan Order
	CCLK	48	73	77	74	107	R2	-
	VCC	-	74	78	75	108	P3	-
74.	I/O (TDO)	49	75	79	76	109	T1	0
	GND	-	76	80	77	110	N3	-
75.	I/O (A0, $\overline{WS}$)	50	77	81	78	111	R1	9
76.	GCK4 (A1, I/O)	51	78	82	79	112	P2	15
77.	I/O (A2, CS1)	52	79	83	80	115	P1	18
78.	I/O (A3)	-	80	84	81	116	N1	21
	GND	-	-	-	-	118	L3	-
79.	I/O (A4)	-	81	85	82	121	K3	27
80.	I/O (A5)	53	82	86	83	122	K2	30
81.	I/O	-	-	87	84	123	K1	33
82.	I/O	-	-	88	85	124	J1	39
83.	I/O (A6)	54	83	89	86	125	J2	42
84.	I/O (A7)	55	84	90	87	126	J3	45
	GND	56	1	91	88	127	H2	-

* VQ64 package supports Master Serial, Slave Serial, and Express configuration modes only.

Additional No Connect (N.C.) Connections on TQ144 Package

TQ144					
135	9	41	67	98	117
136	10	42	68	99	119
140	25	46	77	103	120
141	26	47	78	104	
4	30	62	82	113	
5	31	63	83	114	

Notes: Boundary Scan Bit 0 = TDO.T
Boundary Scan Bit 1 = TDO.O
Boundary Scan Bit 1056 = BSCAN.UPD

Pin Locations for XC5204 Devices

The following table may contain pinout information for unsupported device/package combinations. Please see the availability charts elsewhere in the XC5200 Series data sheet for availability information.

Pin	Description		PC84	PQ100	VQ100	TQ144	PG156	PQ160	Boundary Scan Order
	VCC		2	92	89	128	H3	142	-
1.	I/O (A8)		3	93	90	129	H1	143	78
2.	I/O (A9)		4	94	91	130	G1	144	81
3.	I/O		-	95	92	131	G2	145	87
4.	I/O		-	96	93	132	G3	146	90
5.	I/O (A10)		5	97	94	133	F1	147	93
6.	I/O (A11)		6	98	95	134	F2	148	99
7.	I/O		-	-	-	135	E1	149	102
8.	I/O		-	-	-	136	E2	150	105
	GND		-	-	-	137	F3	151	-
9.	I/O		-	-	-	-	D1	152	111
10.	I/O		-	-	-	-	D2	153	114
11.	I/O (A12)		7	99	96	138	E3	154	117
12.	I/O (A13)		8	100	97	139	C1	155	123
13.	I/O		-	-	-	140	C2	156	126

XC5204-6TQ144C Xilinx Inc. IC FPGA 117 I/O 144TQFP
Product Obsolete or Under Obsolescence

Pin	Description		PC84	PQ100	VQ100	TQ144	PG156	PQ160	Boundary Scan Order
14.	I/O		-	-	-	141	D3	157	129
15.	I/O (A14)		9	1	98	142	B1	158	138
16.	I/O (A15)		10	2	99	143	B2	159	141
	VCC		11	3	100	144	C3	160	-
	GND		12	4	1	1	C4	1	-
17.	GCK1 (A16, I/O)		13	5	2	2	B3	2	150
18.	I/O (A17)		14	6	3	3	A1	3	153
19.	I/O		-	-	-	4	A2	4	159
20.	I/O		-	-	-	5	C5	5	162
21.	I/O (TDI)		15	7	4	6	B4	6	165
22.	I/O (TCK)		16	8	5	7	A3	7	171
	GND		-	-	-	8	C6	10	-
23.	I/O		-	-	-	9	B5	11	174
24.	I/O		-	-	-	10	B6	12	177
25.	I/O (TMS)		17	9	6	11	A5	13	180
26.	I/O		18	10	7	12	C7	14	183
27.	I/O		-	-	-	13	B7	15	186
28.	I/O		-	11	8	14	A6	16	189
29.	I/O		19	12	9	15	A7	17	195
30.	I/O		20	13	10	16	A8	18	198
	GND		21	14	11	17	C8	19	-
	VCC		22	15	12	18	B8	20	-
31.	I/O		23	16	13	19	C9	21	201
32.	I/O		24	17	14	20	B9	22	207
33.	I/O		-	18	15	21	A9	23	210
34.	I/O		-	-	-	22	B10	24	213
35.	I/O		25	19	16	23	C10	25	219
36.	I/O		26	20	17	24	A10	26	222
37.	I/O		-	-	-	25	A11	27	225
38.	I/O		-	-	-	26	B11	28	231
	GND		-	-	-	27	C11	29	-
39.	I/O		27	21	18	28	B12	32	234
40.	I/O		-	22	19	29	A13	33	237
41.	I/O		-	-	-	30	A14	34	240
42.	I/O		-	-	-	31	C12	35	243
43.	I/O		28	23	20	32	B13	36	246
44.	I/O		29	24	21	33	B14	37	249
45.	M1 (I/O)		30	25	22	34	A15	38	258
	GND		31	26	23	35	C13	39	-
46.	M0 (I/O)		32	27	24	36	A16	40	261
	VCC		33	28	25	37	C14	41	-
47.	M2 (I/O)		34	29	26	38	B15	42	264
48.	GCK2 (I/O)		35	30	27	39	B16	43	267
49.	I/O (HDC)		36	31	28	40	D14	44	276
50.	I/O		-	-	-	41	C15	45	279
51.	I/O		-	-	-	42	D15	46	282
52.	I/O		-	32	29	43	E14	47	288
53.	I/O (LDC)		37	33	30	44	C16	48	291
54.	I/O		-	-	-	-	E15	49	294
55.	I/O		-	-	-	-	D16	50	300
	GND		-	-	-	45	F14	51	-
56.	I/O		-	-	-	46	F15	52	303

XC5204-6TQ144C Xilinx Inc. IC FPGA 117 I/O 144TQFP
Product Obsolete or Under Obsolescence

Pin	Description		PC84	PQ100	VQ100	TQ144	PG156	PQ160	Boundary Scan Order
57.	I/O		-	-	-	47	E16	53	306
58.	I/O		38	34	31	48	F16	54	312
59.	I/O		39	35	32	49	G14	55	315
60.	I/O		-	36	33	50	G15	56	318
61.	I/O		-	37	34	51	G16	57	324
62.	I/O		40	38	35	52	H16	58	327
63.	I/O ($\overline{ERR}$, $\overline{INIT}$)		41	39	36	53	H15	59	330
	VCC		42	40	37	54	H14	60	-
	GND		43	41	38	55	J14	61	-
64.	I/O		44	42	39	56	J15	62	336
65.	I/O		45	43	40	57	J16	63	339
66.	I/O		-	44	41	58	K16	64	348
67.	I/O		-	45	42	59	K15	65	351
68.	I/O		46	46	43	60	K14	66	354
69.	I/O		47	47	44	61	L16	67	360
70.	I/O		-	-	-	62	M16	68	363
71.	I/O		-	-	-	63	L15	69	366
	GND		-	-	-	64	L14	70	-
72.	I/O		-	-	-	-	N16	71	372
73.	I/O		-	-	-	-	M15	72	375
74.	I/O		48	48	45	65	P16	73	378
75.	I/O		49	49	46	66	M14	74	384
76.	I/O		-	-	-	67	N15	75	387
77.	I/O		-	-	-	68	P15	76	390
78.	I/O		50	50	47	69	N14	77	396
79.	I/O		51	51	48	70	R16	78	399
	GND		52	52	49	71	P14	79	-
	DONE		53	53	50	72	R15	80	-
	VCC		54	54	51	73	P13	81	-
	PROG		55	55	52	74	R14	82	-
80.	I/O (D7)		56	56	53	75	T16	83	408
81.	GCK3 (I/O)		57	57	54	76	T15	84	411
82.	I/O		-	-	-	77	R13	85	420
83.	I/O		-	-	-	78	P12	86	423
84.	I/O (D6)		58	58	55	79	T14	87	426
85.	I/O		-	59	56	80	T13	88	432
	GND		-	-	-	81	P11	91	-
86.	I/O		-	-	-	82	R11	92	435
87.	I/O		-	-	-	83	T11	93	438
88.	I/O (D5)		59	60	57	84	T10	94	444
89.	I/O ($\overline{CS0}$)		60	61	58	85	P10	95	447
90.	I/O		-	62	59	86	R10	96	450
91.	I/O		-	63	60	87	T9	97	456
92.	I/O (D4)		61	64	61	88	R9	98	459
93.	I/O		62	65	62	89	P9	99	462
	VCC		63	66	63	90	R8	100	-
	GND		64	67	64	91	P8	101	-
94.	I/O (D3)		65	68	65	92	T8	102	468
95.	I/O ($\overline{RS}$)		66	69	66	93	T7	103	471
96.	I/O		-	70	67	94	T6	104	474
97.	I/O		-	-	-	95	R7	105	480
98.	I/O (D2)		67	71	68	96	P7	106	483

XC5204-6TQ144C Xilinx Inc. IC FPGA 117 I/O 144TQFP
Product Obsolete or Under Obsolescence

Pin	Description		PC84	PQ100	VQ100	TQ144	PG156	PQ160	Boundary Scan Order
99.	I/O		68	72	69	97	T5	107	486
100.	I/O		-	-	-	98	R6	108	492
101.	I/O		-	-	-	99	T4	109	495
	GND		-	-	-	100	P6	110	-
102.	I/O (D1)		69	73	70	101	T3	113	498
103.	I/O (RCLK-BUSY/RDY)		70	74	71	102	P5	114	504
104.	I/O		-	-	-	103	R4	115	507
105.	I/O		-	-	-	104	R3	116	510
106.	I/O (D0, DIN)		71	75	72	105	P4	117	516
107.	I/O (DOUT)		72	76	73	106	T2	118	519
	CCLK		73	77	74	107	R2	119	-
	VCC		74	78	75	108	P3	120	-
108.	I/O (TDO)		75	79	76	109	T1	121	0
	GND		76	80	77	110	N3	122	-
109.	I/O (A0, $\overline{WS}$)		77	81	78	111	R1	123	9
110.	GCK4 (A1, I/O)		78	82	79	112	P2	124	15
111.	I/O		-	-	-	113	N2	125	18
112.	I/O		-	-	-	114	M3	126	21
113.	I/O (A2, CS1)		79	83	80	115	P1	127	27
114.	I/O (A3)		80	84	81	116	N1	128	30
115.	I/O		-	-	-	117	M2	129	33
116.	I/O		-	-	-	-	M1	130	39
	GND		-	-	-	118	L3	131	-
117.	I/O		-	-	-	119	L2	132	42
118.	I/O		-	-	-	120	L1	133	45
119.	I/O (A4)		81	85	82	121	K3	134	51
120.	I/O (A5)		82	86	83	122	K2	135	54
121.	I/O		-	87	84	123	K1	137	57
122.	I/O		-	88	85	124	J1	138	63
123.	I/O (A6)		83	89	86	125	J2	139	66
124.	I/O (A7)		84	90	87	126	J3	140	69
	GND		1	91	88	127	H2	141	-

Additional No Connect (N.C.) Connections for PQ160 Package

PQ160				
8	30	89	111	136
9	31	90	112	

Notes: Boundary Scan Bit 0 = TDO.T
Boundary Scan Bit 1 = TDO.O
Boundary Scan Bit 1056 = BSCAN.UPD

XC5204-6TQ144C Xilinx Inc. IC FPGA 117 I/O 144TQFP
Product Obsolete or Under Obsolescence

Pin Locations for XC5206 Devices

The following table may contain pinout information for unsupported device/package combinations. Please see the availability charts elsewhere in the XC5200 Series data sheet for availability information.

Pin	Description	PC84	PQ100	VQ100	TQ144	PQ160	TQ176	PG191	PQ208	Boundary Scan Order
	VCC	2	92	89	128	142	155	J4	183	-
1.	I/O (A8)	3	93	90	129	143	156	J3	184	87
2.	I/O (A9)	4	94	91	130	144	157	J2	185	90
3.	I/O	-	95	92	131	145	158	J1	186	93
4.	I/O	-	96	93	132	146	159	H1	187	99
5.	I/O	-	-	-	-	-	160	H2	188	102
6.	I/O	-	-	-	-	-	161	H3	189	105
7.	I/O (A10)	5	97	94	133	147	162	G1	190	111
8.	I/O (A11)	6	98	95	134	148	163	G2	191	114
9.	I/O	-	-	-	135	149	164	F1	192	117
10.	I/O	-	-	-	136	150	165	E1	193	123
	GND	-	-	-	137	151	166	G3	194	-
11.	I/O	-	-	-	-	152	168	C1	197	126
12.	I/O	-	-	-	-	153	169	E2	198	129
13.	I/O (A12)	7	99	96	138	154	170	F3	199	138
14.	I/O (A13)	8	100	97	139	155	171	D2	200	141
15.	I/O	-	-	-	140	156	172	B1	201	150
16.	I/O	-	-	-	141	157	173	E3	202	153
17.	I/O (A14)	9	1	98	142	158	174	C2	203	162
18.	I/O (A15)	10	2	99	143	159	175	B2	204	165
	VCC	11	3	100	144	160	176	D3	205	-
	GND	12	4	1	1	1	1	D4	2	-
19.	GCK1 (A16, I/O)	13	5	2	2	2	2	C3	4	174
20.	I/O (A17)	14	6	3	3	3	3	C4	5	177
21.	I/O	-	-	-	4	4	4	B3	6	183
22.	I/O	-	-	-	5	5	5	C5	7	186
23.	I/O (TDI)	15	7	4	6	6	6	A2	8	189
24.	I/O (TCK)	16	8	5	7	7	7	B4	9	195
25.	I/O	-	-	-	-	8	8	C6	10	198
26.	I/O	-	-	-	-	9	9	A3	11	201
	GND	-	-	-	8	10	10	C7	14	-
27.	I/O	-	-	-	9	11	11	A4	15	207
28.	I/O	-	-	-	10	12	12	A5	16	210
29.	I/O (TMS)	17	9	6	11	13	13	B7	17	213
30.	I/O	18	10	7	12	14	14	A6	18	219
31.	I/O	-	-	-	-	-	15	C8	19	222
32.	I/O	-	-	-	-	-	16	A7	20	225
33.	I/O	-	-	-	13	15	17	B8	21	234
34.	I/O	-	11	8	14	16	18	A8	22	237
35.	I/O	19	12	9	15	17	19	B9	23	246
36.	I/O	20	13	10	16	18	20	C9	24	249
	GND	21	14	11	17	19	21	D9	25	-
	VCC	22	15	12	18	20	22	D10	26	-
37.	I/O	23	16	13	19	21	23	C10	27	255
38.	I/O	24	17	14	20	22	24	B10	28	258
39.	I/O	-	18	15	21	23	25	A9	29	261
40.	I/O	-	-	-	22	24	26	A10	30	267
41.	I/O	-	-	-	-	-	27	A11	31	270

XC5204-6TQ144C Xilinx Inc. IC FPGA 117 I/O 144TQFP
Product Obsolete or Under Obsolescence

Pin	Description	PC84	PQ100	VQ100	TQ144	PQ160	TQ176	PG191	PQ208	Boundary Scan Order
42.	I/O	-	-	-	-	-	28	C11	32	273
43.	I/O	25	19	16	23	25	29	B11	33	279
44.	I/O	26	20	17	24	26	30	A12	34	282
45.	I/O	-	-	-	25	27	31	B12	35	285
46.	I/O	-	-	-	26	28	32	A13	36	291
	GND	-	-	-	27	29	33	C12	37	-
47.	I/O	-	-	-	-	30	34	A15	40	294
48.	I/O	-	-	-	-	31	35	C13	41	297
49.	I/O	27	21	18	28	32	36	B14	42	303
50.	I/O	-	22	19	29	33	37	A16	43	306
51.	I/O	-	-	-	30	34	38	B15	44	309
52.	I/O	-	-	-	31	35	39	C14	45	315
53.	I/O	28	23	20	32	36	40	A17	46	318
54.	I/O	29	24	21	33	37	41	B16	47	321
55.	M1 (I/O)	30	25	22	34	38	42	C15	48	330
	GND	31	26	23	35	39	43	D15	49	-
56.	M0 (I/O)	32	27	24	36	40	44	A18	50	333
	VCC	33	28	25	37	41	45	D16	55	-
57.	M2 (I/O)	34	29	26	38	42	46	C16	56	336
58.	GCK2 (I/O)	35	30	27	39	43	47	B17	57	339
59.	I/O (HDC)	36	31	28	40	44	48	E16	58	348
60.	I/O	-	-	-	41	45	49	C17	59	351
61.	I/O	-	-	-	42	46	50	D17	60	354
62.	I/O	-	32	29	43	47	51	B18	61	360
63.	I/O (LDC)	37	33	30	44	48	52	E17	62	363
64.	I/O	-	-	-	-	49	53	F16	63	372
65.	I/O	-	-	-	-	50	54	C18	64	375
	GND	-	-	-	45	51	55	G16	67	-
66.	I/O	-	-	-	46	52	56	E18	68	378
67.	I/O	-	-	-	47	53	57	F18	69	384
68.	I/O	38	34	31	48	54	58	G17	70	387
69.	I/O	39	35	32	49	55	59	G18	71	390
70.	I/O	-	-	-	-	-	60	H16	72	396
71.	I/O	-	-	-	-	-	61	H17	73	399
72.	I/O	-	36	33	50	56	62	H18	74	402
73.	I/O	-	37	34	51	57	63	J18	75	408
74.	I/O	40	38	35	52	58	64	J17	76	411
75.	I/O ($\overline{ERR}$, $\overline{INIT}$)	41	39	36	53	59	65	J16	77	414
	VCC	42	40	37	54	60	66	J15	78	-
	GND	43	41	38	55	61	67	K15	79	-
76.	I/O	44	42	39	56	62	68	K16	80	420
77.	I/O	45	43	40	57	63	69	K17	81	423
78.	I/O	-	44	41	58	64	70	K18	82	426
79.	I/O	-	45	42	59	65	71	L18	83	432
80.	I/O	-	-	-	-	-	72	L17	84	435
81.	I/O	-	-	-	-	-	73	L16	85	438
82.	I/O	46	46	43	60	66	74	M18	86	444
83.	I/O	47	47	44	61	67	75	M17	87	447
84.	I/O	-	-	-	62	68	76	N18	88	450
85.	I/O	-	-	-	63	69	77	P18	89	456
	GND	-	-	-	64	70	78	M16	90	-
86.	I/O	-	-	-	-	71	79	T18	93	459

XC5204-6TQ144C Xilinx Inc. IC FPGA 117 I/O 144TQFP
Product Obsolete or Under Obsolescence

Pin	Description	PC84	PQ100	VQ100	TQ144	PQ160	TQ176	PG191	PQ208	Boundary Scan Order
87.	I/O	-	-	-	-	72	80	P17	94	468
88.	I/O	48	48	45	65	73	81	N16	95	471
89.	I/O	49	49	46	66	74	82	T17	96	480
90.	I/O	-	-	-	67	75	83	R17	97	483
91.	I/O	-	-	-	68	76	84	P16	98	486
92.	I/O	50	50	47	69	77	85	U18	99	492
93.	I/O	51	51	48	70	78	86	T16	100	495
	GND	52	52	49	71	79	87	R16	101	-
	DONE	53	53	50	72	80	88	U17	103	-
	VCC	54	54	51	73	81	89	R15	106	-
	PROG	55	55	52	74	82	90	V18	108	-
94.	I/O (D7)	56	56	53	75	83	91	T15	109	504
95.	GCK3 (I/O)	57	57	54	76	84	92	U16	110	507
96.	I/O	-	-	-	77	85	93	T14	111	516
97.	I/O	-	-	-	78	86	94	U15	112	519
98.	I/O (D6)	58	58	55	79	87	95	V17	113	522
99.	I/O	-	59	56	80	88	96	V16	114	528
100.	I/O	-	-	-	-	89	97	T13	115	531
101.	I/O	-	-	-	-	90	98	U14	116	534
	GND	-	-	-	81	91	99	T12	119	-
102.	I/O	-	-	-	82	92	100	U13	120	540
103.	I/O	-	-	-	83	93	101	V13	121	543
104.	I/O (D5)	59	60	57	84	94	102	U12	122	552
105.	I/O ($\overline{CS0}$)	60	61	58	85	95	103	V12	123	555
106.	I/O	-	-	-	-	-	104	T11	124	558
107.	I/O	-	-	-	-	-	105	U11	125	564
108.	I/O	-	62	59	86	96	106	V11	126	567
109.	I/O	-	63	60	87	97	107	V10	127	570
110.	I/O (D4)	61	64	61	88	98	108	U10	128	576
111.	I/O	62	65	62	89	99	109	T10	129	579
	VCC	63	66	63	90	100	110	R10	130	-
	GND	64	67	64	91	101	111	R9	131	-
112.	I/O (D3)	65	68	65	92	102	112	T9	132	588
113.	I/O ($\overline{RS}$)	66	69	66	93	103	113	U9	133	591
114.	I/O	-	70	67	94	104	114	V9	134	600
115.	I/O	-	-	-	95	105	115	V8	135	603
116.	I/O	-	-	-	-	-	116	U8	136	612
117.	I/O	-	-	-	-	-	117	T8	137	615
118.	I/O (D2)	67	71	68	96	106	118	V7	138	618
119.	I/O	68	72	69	97	107	119	U7	139	624
120.	I/O	-	-	-	98	108	120	V6	140	627
121.	I/O	-	-	-	99	109	121	U6	141	630
	GND	-	-	-	100	110	122	T7	142	-
122.	I/O	-	-	-	-	111	123	U5	145	636
123.	I/O	-	-	-	-	112	124	T6	146	639
124.	I/O (D1)	69	73	70	101	113	125	V3	147	642
125.	I/O ($\overline{RCLK\text{-}BUSY/RDY}$)	70	74	71	102	114	126	V2	148	648
126.	I/O	-	-	-	103	115	127	U4	149	651
127.	I/O	-	-	-	104	116	128	T5	150	654
128.	I/O (D0, DIN)	71	75	72	105	117	129	U3	151	660
129.	I/O (DOUT)	72	76	73	106	118	130	T4	152	663

XC5204-6TQ144C Xilinx Inc. IC FPGA 117 I/O 144TQFP
Product Obsolete or Under Obsolescence

Pin	Description	PC84	PQ100	VQ100	TQ144	PQ160	TQ176	PG191	PQ208	Boundary Scan Order
	CCLK	73	77	74	107	119	131	V1	153	-
	VCC	74	78	75	108	120	132	R4	154	-
130.	I/O (TDO)	75	79	76	109	121	133	U2	159	-
	GND	76	80	77	110	122	134	R3	160	-
131.	I/O (A0, $\overline{WS}$)	77	81	78	111	123	135	T3	161	9
132.	GCK4 (A1, I/O)	78	82	79	112	124	136	U1	162	15
133.	I/O	-	-	-	113	125	137	P3	163	18
134.	I/O	-	-	-	114	126	138	R2	164	21
135.	I/O (A2, CS1)	79	83	80	115	127	139	T2	165	27
136.	I/O (A3)	80	84	81	116	128	140	N3	166	30
137.	I/O	-	-	-	117	129	141	P2	167	33
138.	I/O	-	-	-	-	130	142	T1	168	42
	GND	-	-	-	118	131	143	M3	171	-
139.	I/O	-	-	-	119	132	144	P1	172	45
140.	I/O	-	-	-	120	133	145	N1	173	51
141.	I/O (A4)	81	85	82	121	134	146	M2	174	54
142.	I/O (A5)	82	86	83	122	135	147	M1	175	57
143.	I/O	-	-	-	-	-	148	L3	176	63
144.	I/O	-	-	-	-	136	149	L2	177	66
145.	I/O	-	87	84	123	137	150	L1	178	69
146.	I/O	-	88	85	124	138	151	K1	179	75
147.	I/O (A6)	83	89	86	125	139	152	K2	180	78
148.	I/O (A7)	84	90	87	126	140	153	K3	181	81
	GND	1	91	88	127	141	154	K4	182	-

Additional No Connect (N.C.) Connections for PQ208 and TQ176 Packages

PQ208							TQ176
195	1	39	65	104	143	158	167
196	3	51	66	105	144	169	
206	12	52	91	107	155	170	
207	13	53	92	117	156		
208	38	54	102	118	157		

Notes: Boundary Scan Bit 0 = TDO.T
Boundary Scan Bit 1 = TDO.O
Boundary Scan Bit 1056 = BSCAN.UPD

Pin Locations for XC5210 Devices

The following table may contain pinout information for unsupported device/package combinations. Please see the availability charts elsewhere in the XC5200 Series data sheet for availability information.

Pin	Description	PC84	TQ144	PQ160	TQ176	PQ208	PG223	BG225	PQ240	Boundary Scan Order
	VCC	2	128	142	155	183	J4	VCC*	212	-
1.	I/O (A8)	3	129	143	156	184	J3	E8	213	111
2.	I/O (A9)	4	130	144	157	185	J2	B7	214	114
3.	I/O	-	131	145	158	186	J1	A7	215	117
4.	I/O	-	132	146	159	187	H1	C7	216	123
5.	I/O	-	-	-	160	188	H2	D7	217	126
6.	I/O	-	-	-	161	189	H3	E7	218	129

XC5204-6TQ144C Xilinx Inc. IC FPGA 117 I/O 144TQFP
Product Obsolete or Under Obsolescence

Pin	Description	PC84	TQ144	PQ160	TQ176	PQ208	PG223	BG225	PQ240	Boundary Scan Order
7.	I/O (A10)	5	133	147	162	190	G1	A6	220	135
8.	I/O (A11)	6	134	148	163	191	G2	B6	221	138
	VCC	-	-	-	-	-	-	VCC*	222	-
9.	I/O	-	-	-	-	-	H4	C6	223	141
10.	I/O	-	-	-	-	-	G4	F7	224	150
11.	I/O	-	135	149	164	192	F1	A5	225	153
12.	I/O	-	136	150	165	193	E1	B5	226	162
	GND	-	137	151	166	194	G3	GND*	227	-
13.	I/O	-	-	-	-	195	F2	D6	228	165
14.	I/O	-	-	-	167	196	D1	C5	229	171
15.	I/O	-	-	152	168	197	C1	A4	230	174
16.	I/O	-	-	153	169	198	E2	E6	231	177
17.	I/O (A12)	7	138	154	170	199	F3	B4	232	183
18.	I/O (A13)	8	139	155	171	200	D2	D5	233	186
19.	I/O	-	-	-	-	-	F4	A3	234	189
20.	I/O	-	-	-	-	-	E4	C4	235	195
21.	I/O	-	140	156	172	201	B1	B3	236	198
22.	I/O	-	141	157	173	202	E3	F6	237	201
23.	I/O (A14)	9	142	158	174	203	C2	A2	238	210
24.	I/O (A15)	10	143	159	175	204	B2	C3	239	213
	VCC	11	144	160	176	205	D3	VCC*	240	-
	GND	12	1	1	1	2	D4	GND*	1	-
25.	GCK1 (A16, I/O)	13	2	2	2	4	C3	D4	2	222
26.	I/O (A17)	14	3	3	3	5	C4	B1	3	225
27.	I/O	-	4	4	4	6	B3	C2	4	231
28.	I/O	-	5	5	5	7	C5	E5	5	234
29.	I/O (TDI)	15	6	6	6	8	A2	D3	6	237
30.	I/O (TCK)	16	7	7	7	9	B4	C1	7	243
31.	I/O	-	-	8	8	10	C6	D2	8	246
32.	I/O	-	-	9	9	11	A3	G6	9	249
33.	I/O	-	-	-	-	12	B5	E4	10	255
34.	I/O	-	-	-	-	13	B6	D1	11	258
35.	I/O	-	-	-	-	-	D5	E3	12	261
36.	I/O	-	-	-	-	-	D6	E2	13	267
	GND	-	8	10	10	14	C7	GND*	14	-
37.	I/O	-	9	11	11	15	A4	F5	15	270
38.	I/O	-	10	12	12	16	A5	E1	16	273
39.	I/O (TMS)	17	11	13	13	17	B7	F4	17	279
40.	I/O	18	12	14	14	18	A6	F3	18	282
	VCC	-	-	-	-	-	-	VCC*	19	-
41.	I/O	-	-	-	-	-	D7	F2	20	285
42.	I/O	-	-	-	-	-	D8	F1	21	291
43.	I/O	-	-	-	15	19	C8	G4	23	294
44.	I/O	-	-	-	16	20	A7	G3	24	297
45.	I/O	-	13	15	17	21	B8	G2	25	306
46.	I/O	-	14	16	18	22	A8	G1	26	309
47.	I/O	19	15	17	19	23	B9	G5	27	318
48.	I/O	20	16	18	20	24	C9	H3	28	321
	GND	21	17	19	21	25	D9	GND*	29	-
	VCC	22	18	20	22	26	D10	VCC*	30	-
49.	I/O	23	19	21	23	27	C10	H4	31	327

XC5204-6TQ144C Xilinx Inc. IC FPGA 117 I/O 144TQFP
Product Obsolete or Under Obsolescence

Pin	Description	PC84	TQ144	PQ160	TQ176	PQ208	PG223	BG225	PQ240	Boundary Scan Order
50.	I/O	24	20	22	24	28	B10	H5	32	330
51.	I/O	-	21	23	25	29	A9	J2	33	333
52.	I/O	-	22	24	26	30	A10	J1	34	339
53.	I/O	-	-	-	27	31	A11	J3	35	342
54.	I/O	-	-	-	28	32	C11	J4	36	345
55.	I/O	-	-	-	-	-	D11	J5	38	351
56.	I/O	-	-	-	-	-	D12	K1	39	354
	VCC	-	-	-	-	-	-	VCC*	40	-
57.	I/O	25	23	25	29	33	B11	K2	41	357
58.	I/O	26	24	26	30	34	A12	K3	42	363
59.	I/O	-	25	27	31	35	B12	J6	43	366
60.	I/O	-	26	28	32	36	A13	L1	44	369
	GND	-	27	29	33	37	C12	GND*	45	-
61.	I/O	-	-	-	-	-	D13	L2	46	375
62.	I/O	-	-	-	-	-	D14	K4	47	378
63.	I/O	-	-	-	-	38	B13	L3	48	381
64.	I/O	-	-	-	-	39	A14	M1	49	387
65.	I/O	-	-	30	34	40	A15	K5	50	390
66.	I/O	-	-	31	35	41	C13	M2	51	393
67.	I/O	27	28	32	36	42	B14	L4	52	399
68.	I/O	-	29	33	37	43	A16	N1	53	402
69.	I/O	-	30	34	38	44	B15	M3	54	405
70.	I/O	-	31	35	39	45	C14	N2	55	411
71.	I/O	28	32	36	40	46	A17	K6	56	414
72.	I/O	29	33	37	41	47	B16	P1	57	417
73.	M1 (I/O)	30	34	38	42	48	C15	N3	58	426
	GND	31	35	39	43	49	D15	GND*	59	-
74.	M0 (I/O)	32	36	40	44	50	A18	P2	60	429
	VCC	33	37	41	45	55	D16	VCC*	61	-
75.	M2 (I/O)	34	38	42	46	56	C16	M4	62	432
76.	GCK2 (I/O)	35	39	43	47	57	B17	R2	63	435
77.	I/O (HDC)	36	40	44	48	58	E16	P3	64	444
78.	I/O	-	41	45	49	59	C17	L5	65	447
79.	I/O	-	42	46	50	60	D17	N4	66	450
80.	I/O	-	43	47	51	61	B18	R3	67	456
81.	I/O (LDC)	37	44	48	52	62	E17	P4	68	459
82.	I/O	-	-	49	53	63	F16	K7	69	462
83.	I/O	-	-	50	54	64	C18	M5	70	468
84.	I/O	-	-	-	-	65	D18	R4	71	471
85.	I/O	-	-	-	-	66	F17	N5	72	474
86.	I/O	-	-	-	-	-	E15	P5	73	480
87.	I/O	-	-	-	-	-	F15	L6	74	483
	GND	-	45	51	55	67	G16	GND*	75	-
88.	I/O	-	46	52	56	68	E18	R5	76	486
89.	I/O	-	47	53	57	69	F18	M6	77	492
90.	I/O	38	48	54	58	70	G17	N6	78	495
91.	I/O	39	49	55	59	71	G18	P6	79	504
	VCC	-	-	-	-	-	-	VCC*	80	-
92.	I/O	-	-	-	60	72	H16	R6	81	507
93.	I/O	-	-	-	61	73	H17	M7	82	510
94.	I/O	-	-	-	-	-	G15	N7	84	516

XC5204-6TQ144C Xilinx Inc. IC FPGA 117 I/O 144TQFP
Product Obsolete or Under Obsolescence

Pin	Description	PC84	TQ144	PQ160	TQ176	PQ208	PG223	BG225	PQ240	Boundary Scan Order
95.	I/O	-	-	-	-	-	H15	P7	85	519
96.	I/O	-	50	56	62	74	H18	R7	86	522
97.	I/O	-	51	57	63	75	J18	L7	87	528
98.	I/O	40	52	58	64	76	J17	N8	88	531
99.	I/O ($\overline{ERR}$, $\overline{INIT}$)	41	53	59	65	77	J16	P8	89	534
	VCC	42	54	60	66	78	J15	VCC*	90	-
	GND	43	55	61	67	79	K15	GND*	91	-
100.	I/O	44	56	62	68	80	K16	L8	92	540
101.	I/O	45	57	63	69	81	K17	P9	93	543
102.	I/O	-	58	64	70	82	K18	R9	94	546
103.	I/O	-	59	65	71	83	L18	N9	95	552
104.	I/O	-	-	-	72	84	L17	M9	96	555
105.	I/O	-	-	-	73	85	L16	L9	97	558
106.	I/O	-	-	-	-	-	L15	R10	99	564
107.	I/O	-	-	-	-	-	M15	P10	100	567
	VCC	-	-	-	-	-	-	VCC*	101	-
108.	I/O	46	60	66	74	86	M18	N10	102	570
109.	I/O	47	61	67	75	87	M17	K9	103	576
110.	I/O	-	62	68	76	88	N18	R11	104	579
111.	I/O	-	63	69	77	89	P18	P11	105	588
	GND	-	64	70	78	90	M16	GND*	106	-
112.	I/O	-	-	-	-	-	N15	M10	107	591
113.	I/O	-	-	-	-	-	P15	N11	108	600
114.	I/O	-	-	-	-	91	N17	R12	109	603
115.	I/O	-	-	-	-	92	R18	L10	110	606
116.	I/O	-	-	71	79	93	T18	P12	111	612
117.	I/O	-	-	72	80	94	P17	M11	112	615
118.	I/O	48	65	73	81	95	N16	R13	113	618
119.	I/O	49	66	74	82	96	T17	N12	114	624
120.	I/O	-	67	75	83	97	R17	P13	115	627
121.	I/O	-	68	76	84	98	P16	K10	116	630
122.	I/O	50	69	77	85	99	U18	R14	117	636
123.	I/O	51	70	78	86	100	T16	N13	118	639
	GND	52	71	79	87	101	R16	GND*	119	-
	DONE	53	72	80	88	103	U17	P14	120	-
	VCC	54	73	81	89	106	R15	VCC*	121	-
	PROG	55	74	82	90	108	V18	M12	122	-
124.	I/O (D7)	56	75	83	91	109	T15	P15	123	648
125.	GCK3 (I/O)	57	76	84	92	110	U16	N14	124	651
126.	I/O	-	77	85	93	111	T14	L11	125	660
127.	I/O	-	78	86	94	112	U15	M13	126	663
128.	I/O	-	-	-	-	-	R14	N15	127	666
129.	I/O	-	-	-	-	-	R13	M14	128	672
130.	I/O (D6)	58	79	87	95	113	V17	J10	129	675
131.	I/O	-	80	88	96	114	V16	L12	130	678
132.	I/O	-	-	89	97	115	T13	M15	131	684
133.	I/O	-	-	90	98	116	U14	L13	132	687
134.	I/O	-	-	-	-	117	V15	L14	133	690
135.	I/O	-	-	-	-	118	V14	K11	134	696
	GND	-	81	91	99	119	T12	GND*	135	-
136.	I/O	-	-	-	-	-	R12	L15	136	699

XC5204-6TQ144C Xilinx Inc. IC FPGA 117 I/O 144TQFP
Product Obsolete or Under Obsolescence

Pin	Description	PC84	TQ144	PQ160	TQ176	PQ208	PG223	BG225	PQ240	Boundary Scan Order
137.	I/O	-	-	-	-	-	R11	K12	137	708
138.	I/O	-	82	92	100	120	U13	K13	138	711
139.	I/O	-	83	93	101	121	V13	K14	139	714
	VCC	-	-	-	-	-	-	VCC*	140	-
140.	I/O (D5)	59	84	94	102	122	U12	K15	141	720
141.	I/O ($\overline{CS0}$)	60	85	95	103	123	V12	J12	142	723
142.	I/O	-	-	-	104	124	T11	J13	144	726
143.	I/O	-	-	-	105	125	U11	J14	145	732
144.	I/O	-	86	96	106	126	V11	J15	146	735
145.	I/O	-	87	97	107	127	V10	J11	147	738
146.	I/O (D4)	61	88	98	108	128	U10	H13	148	744
147.	I/O	62	89	99	109	129	T10	H14	149	747
	VCC	63	90	100	110	130	R10	VCC*	150	-
	GND	64	91	101	111	131	R9	GND*	151	-
148.	I/O (D3)	65	92	102	112	132	T9	H12	152	756
149.	I/O ($\overline{RS}$)	66	93	103	113	133	U9	H11	153	759
150.	I/O	-	94	104	114	134	V9	G14	154	768
151.	I/O	-	95	105	115	135	V8	G15	155	771
152.	I/O	-	-	-	116	136	U8	G13	156	780
153.	I/O	-	-	-	117	137	T8	G12	157	783
154.	I/O (D2)	67	96	106	118	138	V7	G11	159	786
155.	I/O	68	97	107	119	139	U7	F15	160	792
	VCC	-	-	-	-	-	-	VCC*	161	-
156.	I/O	-	98	108	120	140	V6	F14	162	795
157.	I/O	-	99	109	121	141	U6	F13	163	798
158.	I/O	-	-	-	-	-	R8	G10	164	804
159.	I/O	-	-	-	-	-	R7	E15	165	807
	GND	-	100	110	122	142	T7	GND*	166	-
160.	I/O	-	-	-	-	-	R6	E14	167	810
161.	I/O	-	-	-	-	-	R5	F12	168	816
162.	I/O	-	-	-	-	143	V5	E13	169	819
163.	I/O	-	-	-	-	144	V4	D15	170	822
164.	I/O	-	-	111	123	145	U5	F11	171	828
165.	I/O	-	-	112	124	146	T6	D14	172	831
166.	I/O (D1)	69	101	113	125	147	V3	E12	173	834
167.	I/O ($\overline{RCLK\text{-}BUSY}$/RDY)	70	102	114	126	148	V2	C15	174	840
168.	I/O	-	103	115	127	149	U4	D13	175	843
169.	I/O	-	104	116	128	150	T5	C14	176	846
170.	I/O (D0, DIN)	71	105	117	129	151	U3	F10	177	855
171.	I/O (DOUT)	72	106	118	130	152	T4	B15	178	858
	CCLK	73	107	119	131	153	V1	C13	179	-
	VCC	74	108	120	132	154	R4	VCC*	180	-
172.	I/O (TDO)	75	109	121	133	159	U2	A15	181	-
	GND	76	110	122	134	160	R3	GND*	182	-
173.	I/O (A0, $\overline{WS}$)	77	111	123	135	161	T3	A14	183	9
174.	GCK4 (A1, I/O)	78	112	124	136	162	U1	B13	184	15
175.	I/O	-	113	125	137	163	P3	E11	185	18
176.	I/O	-	114	126	138	164	R2	C12	186	21
177.	I/O (CS1, A2)	79	115	127	139	165	T2	A13	187	27
178.	I/O (A3)	80	116	128	140	166	N3	B12	188	30
179.	I/O	-	-	-	-	-	P4	F9	189	33

XC5204-6TQ144C Xilinx Inc. IC FPGA 117 I/O 144TQFP
Product Obsolete or Under Obsolescence

Pin	Description	PC84	TQ144	PQ160	TQ176	PQ208	PG223	BG225	PQ240	Boundary Scan Order
180.	I/O	-	-	-	-	-	N4	D11	190	39
181.	I/O	-	117	129	141	167	P2	A12	191	42
182.	I/O	-	-	130	142	168	T1	C11	192	45
183.	I/O	-	-	-	-	169	R1	B11	193	51
184.	I/O	-	-	-	-	170	N2	E10	194	54
	-	-	-	-	-	-	-	GND*		-
	GND	-	118	131	143	171	M3	-	196	-
185.	I/O	-	119	132	144	172	P1	A11	197	57
186.	I/O	-	120	133	145	173	N1	D10	198	66
187.	I/O	-	-	-	-	-	M4	C10	199	69
188.	I/O	-	-	-	-	-	L4	B10	200	75
	VCC	-	-	-	-	-	-	VCC*	201	-
189.	I/O (A4)	81	121	134	146	174	M2	A10	202	78
190.	I/O (A5)	82	122	135	147	175	M1	D9	203	81
191.	I/O	-	-	-	148	176	L3	C9	205	87
192.	I/O	-	-	136	149	177	L2	B9	206	90
193.	I/O	-	123	137	150	178	L1	A9	207	93
194.	I/O	-	124	138	151	179	K1	E9	208	99
195.	I/O (A6)	83	125	139	152	180	K2	C8	209	102
196.	I/O (A7)	84	126	140	153	181	K3	B8	210	105
	GND	1	127	141	154	182	K4	GND*	211	-

Additional No Connect (N.C.) Connections for PQ208 and PQ240 Packages

PQ208					PQ240		
1	53	105	157	208	22	143	219
3	54	107	158		37	158	
51	102	155	206		83	195	
52	104	156	207		98	204	

Notes: * Pins labeled VCC* are internally bonded to a VCC plane within the BG225 package. The external pins are: B2, D8, H15, R8, B14, R1, H1, and R15.
Pins labeled GND* are internally bonded to a ground plane within the BG225 package. The external pins are: A1, D12, G7, G9, H6, H8, H10, J8, K8, A8, F8, G8, H2, H7, H9, J7, J9, M8.
Boundary Scan Bit 0 = TDO.T
Boundary Scan Bit 1 = TDO.O
Boundary Scan Bit 1056 = BSCAN.UPD

Pin Locations for XC5215 Devices

The following table may contain pinout information for unsupported device/package combinations. Please see the availability charts elsewhere in the XC5200 Series data sheet for availability information.

Pin	Description	PQ160	HQ208	HQ240	PG299	BG225	BG352	Boundary Scan Order
	VCC	142	183	212	K1	VCC*	VCC*	-
1.	I/O (A8)	143	184	213	K2	E8	D14	138
2.	I/O (A9)	144	185	214	K3	B7	C14	141
3.	I/O	145	186	215	K5	A7	A15	147
4.	I/O	146	187	216	K4	C7	B15	150
5.	I/O	-	188	217	J1	D7	C15	153
6.	I/O	-	189	218	J2	E7	D15	159
7.	I/O (A10)	147	190	220	H1	A6	A16	162

XC5204-6TQ144C Xilinx Inc. IC FPGA 117 I/O 144TQFP
Product Obsolete or Under Obsolescence

Pin	Description	PQ160	HQ208	HQ240	PG299	BG225	BG352	Boundary Scan Order
8.	I/O (A11)	148	191	221	J3	B6	B16	165
9.	I/O	-	-	-	H2	-	C17	171
10.	I/O	-	-	-	G1	-	B18	174
	VCC	-	-	222	E1	VCC*	VCC*	-
11.	I/O	-	-	223	H3	C6	C18	177
12.	I/O	-	-	224	G2	F7	D17	183
13.	I/O	149	192	225	H4	A5	A20	186
14.	I/O	150	193	226	F2	B5	B19	189
	GND	151	194	227	F1	GND*	GND*	-
15.	I/O	-	-	-	H5	-	C19	195
16.	I/O	-	-	-	G3	-	D18	198
17.	I/O	-	195	228	D1	D6	A21	201
18.	I/O	-	196	229	G4	C5	B20	207
19.	I/O	152	197	230	E2	A4	C20	210
20.	I/O	153	198	231	F3	E6	B21	213
21.	I/O (A12)	154	199	232	G5	B4	B22	219
22.	I/O (A13)	155	200	233	C1	D5	C21	222
23.	I/O	-	-	-	F4	-	D20	225
24.	I/O	-	-	-	E3	-	A23	234
25.	I/O	-	-	234	D2	A3	D21	237
26.	I/O	-	-	235	C2	C4	C22	243
27.	I/O	156	201	236	F5	B3	B24	246
28.	I/O	157	202	237	E4	F6	C23	249
29.	I/O (A14)	158	203	238	D3	A2	D22	258
30.	I/O (A15)	159	204	239	C3	C3	C24	261
	VCC	160	205	240	A2	VCC*	VCC*	-
	GND	1	2	1	B1	GND*	GND*	-
31.	GCK1 (A16, I/O)	2	4	2	D4	D4	D23	270
32.	I/O (A17)	3	5	3	B2	B1	C25	273
33.	I/O	4	6	4	B3	C2	D24	279
34.	I/O	5	7	5	E6	E5	E23	282
35.	I/O (TDI)	6	8	6	D5	D3	C26	285
36.	I/O (TCK)	7	9	7	C4	C1	E24	294
37.	I/O	-	-	-	A3	-	F24	297
38.	I/O	-	-	-	D6	-	E25	303
39.	I/O	8	10	8	E7	D2	D26	306
40.	I/O	9	11	9	B4	G6	G24	309
41.	I/O	-	12	10	C5	E4	F25	315
42.	I/O	-	13	11	A4	D1	F26	318
43.	I/O	-	-	12	D7	E3	H23	321
44.	I/O	-	-	13	C6	E2	H24	327
45.	I/O	-	-	-	E8	-	G25	330
46.	I/O	-	-	-	B5	-	G26	333
	GND	10	14	14	A5	GND*	GND*	-
47.	I/O	11	15	15	B6	F5	J23	339
48.	I/O	12	16	16	D8	E1	J24	342
49.	I/O (TMS)	13	17	17	C7	F4	H25	345
50.	I/O	14	18	18	B7	F3	K23	351
	VCC	-	-	19	A6	VCC*	VCC*	-
51.	I/O	-	-	20	C8	F2	L24	354
52.	I/O	-	-	21	E9	F1	K25	357
53.	I/O	-	-	-	B8	-	L25	363

XC5204-6TQ144C Xilinx Inc. IC FPGA 117 I/O 144TQFP
Product Obsolete or Under Obsolescence

Pin	Description	PQ160	HQ208	HQ240	PG299	BG225	BG352	Boundary Scan Order
54.	I/O	-	-	-	A8	-	L26	366
55.	I/O	-	19	23	C9	G4	M23	369
56.	I/O	-	20	24	B9	G3	M24	375
57.	I/O	15	21	25	E10	G2	M25	378
58.	I/O	16	22	26	A9	G1	M26	381
59.	I/O	17	23	27	D10	G5	N24	390
60.	I/O	18	24	28	C10	H3	N25	393
	GND	19	25	29	A10	GND*	GND*	-
	VCC	20	26	30	A11	VCC*	VCC*	-
61.	I/O	21	27	31	B10	H4	N26	399
62.	I/O	22	28	32	B11	H5	P25	402
63.	I/O	23	29	33	C11	J2	P23	405
64.	I/O	24	30	34	E11	J1	P24	411
65.	I/O	-	31	35	D11	J3	R26	414
66.	I/O	-	32	36	A12	J4	R25	417
67.	I/O	-	-	-	B12	-	R24	423
68.	I/O	-	-	-	A13	-	R23	426
69.	I/O	-	-	38	E12	J5	T26	429
70.	I/O	-	-	39	B13	K1	T25	435
	VCC	-	-	40	A16	VCC*	VCC*	-
71.	I/O	25	33	41	A14	K2	U24	438
72.	I/O	26	34	42	C13	K3	V25	441
73.	I/O	27	35	43	B14	J6	V24	447
74.	I/O	28	36	44	D13	L1	U23	450
	GND	29	37	45	A15	GND*	GND*	-
75.	I/O	-	-	-	B15	-	Y26	453
76.	I/O	-	-	-	E13	-	W25	459
77.	I/O	-	-	46	C14	L2	W24	462
78.	I/O	-	-	47	A17	K4	V23	465
79.	I/O	-	38	48	D14	L3	AA26	471
80.	I/O	-	39	49	B16	M1	Y25	474
81.	I/O	30	40	50	C15	K5	Y24	477
82.	I/O	31	41	51	E14	M2	AA25	483
83.	I/O	-	-	-	A18	-	AB25	486
84.	I/O	-	-	-	D15	-	AA24	489
85.	I/O	32	42	52	C16	L4	Y23	495
86.	I/O	33	43	53	B17	N1	AC26	498
87.	I/O	34	44	54	B18	M3	AA23	501
88.	I/O	35	45	55	E15	N2	AB24	507
89.	I/O	36	46	56	D16	K6	AD25	510
90.	I/O	37	47	57	C17	P1	AC24	513
91.	M1 (I/O)	38	48	58	A20	N3	AB23	522
	GND	39	49	59	A19	GND*	GND*	-
92.	M0 (I/O)	40	50	60	C18	P2	AD24	525
	VCC	41	55	61	B20	VCC*	VCC*	-
93.	M2 (I/O)	42	56	62	D17	M4	AC23	528
94.	GCK2 (I/O)	43	57	63	B19	R2	AE24	531
95.	I/O (HDC)	44	58	64	C19	P3	AD23	540
96.	I/O	45	59	65	F16	L5	AC22	543
97.	I/O	46	60	66	E17	N4	AF24	546
98.	I/O	47	61	67	D18	R3	AD22	552
99.	I/O (LDC)	48	62	68	C20	P4	AE23	555

XC5204-6TQ144C Xilinx Inc. IC FPGA 117 I/O 144TQFP
Product Obsolete or Under Obsolescence

Pin	Description	PQ160	HQ208	HQ240	PG299	BG225	BG352	Boundary Scan Order
100.	I/O	-	-	-	F17	-	AE22	558
101.	I/O	-	-	-	G16	-	AF23	564
102.	I/O	49	63	69	D19	K7	AD20	567
103.	I/O	50	64	70	E18	M5	AE21	570
104.	I/O	-	65	71	D20	R4	AF21	576
105.	I/O	-	66	72	G17	N5	AC19	579
106.	I/O	-	-	73	F18	P5	AD19	582
107.	I/O	-	-	74	H16	L6	AE20	588
108.	I/O	-	-	-	E19	-	AF20	591
109.	I/O	-	-	-	F19	-	AC18	594
	GND	51	67	75	E20	GND*	GND*	-
110.	I/O	52	68	76	H17	R5	AD18	600
111.	I/O	53	69	77	G18	M6	AE19	603
112.	I/O	54	70	78	G19	N6	AC17	606
113.	I/O	55	71	79	H18	P6	AD17	612
	VCC	-	-	80	F20	VCC*	VCC*	-
114.	I/O	-	72	81	J16	R6	AE17	615
115.	I/O	-	73	82	G20	M7	AE16	618
116.	I/O	-	-	-	H20	-	AF16	624
117.	I/O	-	-	-	J18	-	AC15	627
118.	I/O	-	-	84	J19	N7	AD15	630
119.	I/O	-	-	85	K16	P7	AE15	636
120.	I/O	56	74	86	J20	R7	AF15	639
121.	I/O	57	75	87	K17	L7	AD14	642
122.	I/O	58	76	88	K18	N8	AE14	648
123.	I/O ($\overline{ERR}$, $\overline{INIT}$)	59	77	89	K19	P8	AF14	651
	VCC	60	78	90	L20	VCC*	VCC*	-
	GND	61	79	91	K20	GND*	GND*	-
124.	I/O	62	80	92	L19	L8	AE13	660
125.	I/O	63	81	93	L18	P9	AC13	663
126.	I/O	64	82	94	L16	R9	AD13	672
127.	I/O	65	83	95	L17	N9	AF12	675
128.	I/O	-	84	96	M20	M9	AE12	678
129.	I/O	-	85	97	M19	L9	AD12	684
130.	I/O	-	-	-	N20	-	AC12	687
131.	I/O	-	-	-	M18	-	AF11	690
132.	I/O	-	-	99	N19	R10	AE11	696
133.	I/O	-	-	100	P20	P10	AD11	699
	VCC	-	-	101	T20	VCC*	VCC*	-
134.	I/O	66	86	102	N18	N10	AE9	702
135.	I/O	67	87	103	P19	K9	AD9	708
136.	I/O	68	88	104	N17	R11	AC10	711
137.	I/O	69	89	105	R19	P11	AF7	714
	GND	70	90	106	R20	GND*	GND*	-
138.	I/O	-	-	-	N16	-	AE8	720
139.	I/O	-	-	-	P18	-	AD8	723
140.	I/O	-	-	107	U20	M10	AC9	726
141.	I/O	-	-	108	P17	N11	AF6	732
142.	I/O	-	91	109	T19	R12	AE7	735
143.	I/O	-	92	110	R18	L10	AD7	738
144.	I/O	71	93	111	P16	P12	AE6	744
145.	I/O	72	94	112	V20	M11	AE5	747

XC5204-6TQ144C Xilinx Inc. IC FPGA 117 I/O 144TQFP
Product Obsolete or Under Obsolescence

Pin	Description	PQ160	HQ208	HQ240	PG299	BG225	BG352	Boundary Scan Order
146.	I/O	-	-	-	R17	-	AD6	750
147.	I/O	-	-	-	T18	-	AC7	756
148.	I/O	73	95	113	U19	R13	AF4	759
149.	I/O	74	96	114	V19	N12	AF3	768
150.	I/O	75	97	115	R16	P13	AD5	771
151.	I/O	76	98	116	T17	K10	AE3	774
152.	I/O	77	99	117	U18	R14	AD4	780
153.	I/O	78	100	118	X20	N13	AC5	783
	GND	79	101	119	W20	GND*	GND*	-
	DONE	80	103	120	V18	P14	AD3	-
	VCC	81	106	121	X19	VCC*	VCC*	-
	PROG	82	108	122	U17	M12	AC4	-
154.	I/O (D7)	83	109	123	W19	P15	AD2	792
155.	GCK3 (I/O)	84	110	124	W18	N14	AC3	795
156.	I/O	85	111	125	T15	L11	AB4	804
157.	I/O	86	112	126	U16	M13	AD1	807
158.	I/O	-	-	127	V17	N15	AA4	810
159.	I/O	-	-	128	X18	M14	AA3	816
160.	I/O	-	-	-	U15	-	AB2	819
161.	I/O	-	-	-	T14	-	AC1	828
162.	I/O (D6)	87	113	129	W17	J10	Y3	831
163.	I/O	88	114	130	V16	L12	AA2	834
164.	I/O	89	115	131	X17	M15	AA1	840
165.	I/O	90	116	132	U14	L13	W4	843
166.	I/O	-	117	133	V15	L14	W3	846
167.	I/O	-	118	134	T13	K11	Y2	852
168.	I/O	-	-	-	W16	-	Y1	855
169.	I/O	-	-	-	W15	-	V4	858
	GND	91	119	135	X16	GND*	GND*	-
170.	I/O	-	-	136	U13	L15	V3	864
171.	I/O	-	-	137	V14	K12	W2	867
172.	I/O	92	120	138	W14	K13	U4	870
173.	I/O	93	121	139	V13	K14	U3	876
	VCC	-	-	140	X15	VCC*	VCC*	-
174.	I/O (D5)	94	122	141	T12	K15	V2	879
175.	I/O ($\overline{CS0}$)	95	123	142	X14	J12	V1	882
176.	I/O	-	-	-	X13	-	T1	888
177.	I/O	-	-	-	V12	-	R4	891
178.	I/O	-	124	144	W12	J13	R3	894
179.	I/O	-	125	145	T11	J14	R2	900
180.	I/O	96	126	146	X12	J15	R1	903
181.	I/O	97	127	147	U11	J11	P3	906
182.	I/O (D4)	98	128	148	V11	H13	P2	912
183.	I/O	99	129	149	W11	H14	P1	915
	VCC	100	130	150	X10	VCC*	VCC*	-
	GND	101	131	151	X11	GND*	GND*	-
184.	I/O (D3)	102	132	152	W10	H12	N2	924
185.	I/O ($\overline{RS}$)	103	133	153	V10	H11	N4	927
186.	I/O	104	134	154	T10	G14	N3	936
187.	I/O	105	135	155	U10	G15	M1	939
188.	I/O	-	136	156	X9	G13	M2	942
189.	I/O	-	137	157	W9	G12	M3	948

XC5204-6TQ144C Xilinx Inc. IC FPGA 117 I/O 144TQFP
Product Obsolete or Under Obsolescence

Pin	Description	PQ160	HQ208	HQ240	PG299	BG225	BG352	Boundary Scan Order
190.	I/O	-	-	-	X8	-	M4	951
191.	I/O	-	-	-	V9	-	L1	954
192.	I/O (D2)	106	138	159	W8	G11	J1	960
193.	I/O	107	139	160	X7	F15	K3	963
	VCC	-	-	161	X5	VCC*	VCC*	
194.	I/O	108	140	162	V8	F14	J2	966
195.	I/O	109	141	163	W7	F13	J3	972
196.	I/O	-	-	164	U8	G10	K4	975
197.	I/O	-	-	165	W6	E15	G1	978
	GND	110	142	166	X6	GND*	GND*	
198.	I/O	-	-	-	T8	-	H2	984
199.	I/O	-	-	-	V7	-	H3	987
200.	I/O	-	-	167	X4	E14	J4	990
201.	I/O	-	-	168	U7	F12	F1	996
202.	I/O	-	143	169	W5	E13	G2	999
203.	I/O	-	144	170	V6	D15	G3	1002
204.	I/O	111	145	171	T7	F11	F2	1008
205.	I/O	112	146	172	X3	D14	E2	1011
206.	I/O (D1)	113	147	173	U6	E12	F3	1014
207.	I/O ($\overline{\text{RCLK-BUSY}}$/RDY)	114	148	174	V5	C15	G4	1020
208.	I/O	-	-	-	W4	-	D2	1023
209.	I/O	-	-	-	W3	-	F4	1032
210.	I/O	115	149	175	T6	D13	E3	1035
211.	I/O	116	150	176	U5	C14	C2	1038
212.	I/O (D0, DIN)	117	151	177	V4	F10	D3	1044
213.	I/O (DOUT)	118	152	178	X1	B15	E4	1047
	CCLK	119	153	179	V3	C13	C3	-
	VCC	120	154	180	W1	VCC*	VCC*	-
214.	I/O (TDO)	121	159	181	U4	A15	D4	0
	GND	122	160	182	X2	GND*	GND*	-
215.	I/O (A0, $\overline{\text{WS}}$)	123	161	183	W2	A14	B3	9
216.	GCK4 (A1, I/O)	124	162	184	V2	B13	C4	15
217.	I/O	125	163	185	R5	E11	D5	18
218.	I/O	126	164	186	T4	C12	A3	21
219.	I/O (A2, CS1)	127	165	187	U3	A13	D6	27
220.	I/O (A3)	128	166	188	V1	B12	C6	30
221.	I/O	-	-	-	R4	-	B5	33
222.	I/O	-	-	-	P5	-	A4	39
223.	I/O	-	-	189	U2	F9	C7	42
224.	I/O	-	-	190	T3	D11	B6	45
225.	I/O	129	167	191	U1	A12	A6	51
226.	I/O	130	168	192	P4	C11	D8	54
227.	I/O	-	169	193	R3	B11	B7	57
228.	I/O	-	170	194	N5	E10	A7	63
229.	I/O	-	-	195	T2	-	D9	66
230.	I/O	-	-	-	R2	-	C9	69
	GND	131	171	196	T1	GND*	GND*	-
231.	I/O	132	172	197	N4	A11	B8	75
232.	I/O	133	173	198	P3	D10	D10	78
233.	I/O	-	-	199	P2	C10	C10	81
234.	I/O	-	-	200	N3	B10	B9	87
	VCC	-	-	201	R1	VCC*	VCC*	-

XC5204-6TQ144C Xilinx Inc. IC FPGA 117 I/O 144TQFP
Product Obsolete or Under Obsolescence

Pin	Description	PQ160	HQ208	HQ240	PG299	BG225	BG352	Boundary Scan Order
235.	I/O	-	-	-	M5	-	B11	90
236.	I/O	-	-	-	P1	-	A11	93
237.	I/O (A4)	134	174	202	N1	A10	D12	99
238.	I/O (A5)	135	175	203	M3	D9	C12	102
239.	I/O	-	176	205	M2	C9	B12	105
240.	I/O	136	177	206	L5	B9	A12	111
241.	I/O	137	178	207	M1	A9	C13	114
242.	I/O	138	179	208	L4	E9	B13	117
243.	I/O (A6)	139	180	209	L3	C8	A13	126
244.	I/O (A7)	140	181	210	L2	B8	B14	129
	GND	141	182	211	L1	GND*	GND*	-

Additional No Connect (N.C.) Connections for HQ208 and HQ240 Packages

HQ208		HQ240
206	102	219
207	104	22
208	105	37
1	107	83
3	155	98
51	156	143
52	157	158
53	158	204
54	-	-

Notes: * Pins labeled VCC* are internally bonded to a VCC plane within the BG225 and BG352 packages. The external pins for the BG225 are: B2, D8, H15, R8, B14, R1, H1, and R15. The external pins for the BG352 are: A10, A17, B2, B25, D13, D19, D7, G23, H4, K1, K26, N23, P4, U1, U26, W23, Y4, AC14, AC20, AC8, AE2, AE25, AF10, and AF17.
Pins labeled GND* are internally bonded to a ground plane within the BG225 and BG352 packages. The external pins for the BG225 are: A1, D12, G7, G9, H6, H8, H10, J8, K8, A8, F8, G8, H2, H7, H9, J7, J9, M8. The external pins for the BG352 are: A1, A2, A5, A8, A14, A19, A22, A25, A26, B1, B26, E1, E26, H1, H26, N1, P26, W1, W26, AB1, AB26, AE1, AE26, AF1, AF13, AF19, AF2, AF22, AF25, AF26, AF5, AF8.

Boundary Scan Bit 0 = TDO.T
Boundary Scan Bit 1 = TDO.O
Boundary Scan Bit 1056 = BSCAN.UPD

XC5204-6TQ144C Xilinx Inc. IC FPGA 117 I/O 144TQFP
Product Obsolete or Under Obsolescence

Product Availability

	PINS	64	84	100	100	144	156	160	176	191	208	208	223	225	240	240	299	352
	TYPE	Plast. VQFP	Plast. PLCC	Plast. PQFP	Plast. VQFP	Plast. TQFP	Ceram. PGA	Plast. PQFP	Plast. TQFP	Ceram. PGA	High-Perf. QFP	Plast. PQFP	Ceram. PGA	Plast. BGA	High-Perf. QFP	Plast. PQFP	Ceram. PGA	Plast. BGA
	CODE	VQ64*	PC84	PQ100	VQ100	TQ144	PG156	PQ160	TQ176	PG191	HQ208	PQ208	PG223	BG225	HQ240	PQ240	PG299	BG352
XC5202	-6	CI	CI	CI	CI	CI	CI											
	-5	CI	CI	CI	CI	CI	CI											
	-4	C	C	C	C	C	C											
	-3	C	C	C	C	C	C											
XC5204	-6		CI	CI	CI	CI	CI	CI										
	-5		CI	CI	CI	CI	CI	CI										
	-4		C	C	C	C	C	C										
	-3		C	C	C	C	C	C										
XC5206	-6		CI	CI	CI	CI		CI	CI	CI		CI						
	-5		CI	CI	CI	CI		CI	CI	CI		CI						
	-4		C	C	C	C		C	C	C		C						
	-3		C	C	C	C		C	C	C		C						
XC5210	-6		CI			CI		CI	CI			CI	CI	CI		CI		
	-5		CI			CI		CI	CI			CI	CI	CI		CI		
	-4		C			C		C	C			C	C	C		C		
	-3		C			C		C	C			C	C	C		C		
XC5215	-6							CI			CI			CI	CI		CI	CI
	-5							C			C			C	C		C	C
	-4							C			C			C	C		C	C
	-3							C			C			C	C		C	C

7/8/98

C = Commercial T_J = 0° to +85°C

I= Industrial T_J = -40°C to +100°C

* VQ64 package supports Master Serial, Slave Serial, and Express configuration modes only.

User I/O Per Package

Device	Max I/O	Package Type																
		VQ64	PC84	PQ100	VQ100	TQ144	PG156	PQ160	TQ176	PG191	HQ208	PQ208	PG223	BG225	HQ240	PQ240	PG299	BG352
XC5202	84	52	65	81	81	84	84											
XC5204	124		65	81	81	117	124	124										
XC5206	148		65	81	81	117		133	148	148		148						
XC5210	196		65			117		133	149			164	196	196		196		
XC5215	244							133			164			196	197		244	244

7/8/98

Ordering Information

Example: **XC5210-6PQ208C**

Device Type

Speed Grade

Temperature Range

Number of Pins

Package Type

XC5204-6TQ144C Xilinx Inc. IC FPGA 117 I/O 144TQFP
Product Obsolete or Under Obsolescence

Revisions

Version	Description
12/97	Rev 5.0 added -3, -4 specification
7/98	Rev 5.1 added Spartan family to comparison, removed HQ304
11/98	Rev 5.2 All specifications made final.

FPGAMALL
Authorized Distributor

OUR CERTIFICATE

A long-term cooperative relationship can be built between global customers and us by providing excellent products

Business Type	Trading Company, Distributor/Wholesaler
Main Products	Electronic Integrated Circuit
Certifications	ISO9001
Total Annual Revenue	US$2.5 Million - US$5 Million
Country / Region	Hongkong, China
Total Employees	100 - 200 People
Year Established	2018
Main Markets	North America South Asia Western Europe

sales@fpgamall.com
+00852-56428680