https://www.fpgamall.com

THE DATASHEET OF FPGA

Spartan-6 FPGA Data Sheet: DC and Switching Characteristics

DS162 (v3.1.1) January 30, 2015 **Product Specification**

Spartan-6 FPGA Electrical Characteristics

Spartan®-6 LX and LXT FPGAs are available in various speed grades, with -3 having the highest performance. The DC and AC electrical parameters of the Automotive XA Spartan-6 FPGAs and Defense-grade Spartan-6Q FPGAs devices are equivalent to the commercial specifications except where noted. The timing characteristics of the commercial (XC) -2 speed grade industrial device are the same as for a -2 speed grade commercial device. The -2Q and -3Q speed grades are exclusively for the expanded (Q) temperature range. The timing characteristics are equivalent to those shown for the -2 and -3 speed grades for the Automotive and Defense-grade devices.

Spartan-6 FPGA DC and AC characteristics are specified for commercial (C), industrial (I), and expanded (Q) temperature ranges. Only selected speed grades and/or devices might be available in the industrial or expanded temperature ranges for Automotive and Defense-grade devices. References to device names refer to all available variations of that part number (for example, LX75 could denote XC6SLX75, XA6SLX75, or XQ6SLX75). The Spartan-6 FPGA -3N speed grade designates devices that do not support MCB functionality.

All supply voltage and junction temperature specifications are representative of worst-case conditions. The parameters included are common to popular designs and typical applications.

Available device and package combinations can be found at:

- DS160: *Spartan-6 Family Overview*
- DS170: *Automotive XA Spartan-6 Family Overview*
- DS172: *Defense-Grade Spartan-6Q Family Overview*

This Spartan-6 FPGA data sheet, part of an overall set of documentation on the Spartan-6 family of FPGAs, is available on the Xilinx website at http://www.xilinx.com/support/documentation/spartan-6.htm.

Spartan-6 FPGA DC Characteristics

Table 1: **Absolute Maximum Ratings**(1)

Symbol	Description		Units
V_{CCINT}	Internal supply voltage relative to GND	–0.5 to 1.32	V
V_{CCAUX}	Auxiliary supply voltage relative to GND	–0.5 to 3.75	V
V_{CCO}	Output drivers supply voltage relative to GND	–0.5 to 3.75	V
V_{BATT}	Key memory battery backup supply (LX75, LX75T, LX100, LX100T, LX150, and LX150T only)	–0.5 to 4.05	V
V_{FS}	External voltage supply for eFUSE programming (LX75, LX75T, LX100, LX100T, LX150, and LX150T only)(2)	–0.5 to 3.75	V
V_{REF}	Input reference voltage	–0.5 to 3.75	V

© 2009–2015 Xilinx, Inc. XILINX, the Xilinx logo, Virtex, Zynq, Artix, Kintex, Spartan, ISE, and other designated brands included herein are trademarks of Xilinx in the United States and other countries. All other trademarks are the property of their respective owners.

Table 1: **Absolute Maximum Ratings[1] *(Cont'd)***

Symbol	Description					Units
V_{IN} and V_{TS}[3]	I/O input voltage or voltage applied to 3-state output, relative to GND[4]	All user and dedicated I/Os	Commercial	DC	–0.60 to 4.10	V
				20% overshoot duration	–0.75 to 4.25	V
				8% overshoot duration[5]	–0.75 to 4.40	V
			Industrial	DC	–0.60 to 3.95	V
				20% overshoot duration	–0.75 to 4.15	V
				4% overshoot duration[5]	–0.75 to 4.40	V
			Expanded (Q)	DC	–0.60 to 3.95	V
				20% overshoot duration	–0.75 to 4.15	V
				4% overshoot duration[5]	–0.75 to 4.40	V
		Restricted to maximum of 100 user I/Os	Commercial	20% overshoot duration	–0.75 to 4.35	V
				15% overshoot duration[5]	–0.75 to 4.40	V
				10% overshoot duration	–0.75 to 4.45	V
			Industrial	20% overshoot duration	–0.75 to 4.25	V
				10% overshoot duration	–0.75 to 4.35	V
				8% overshoot duration[5]	–0.75 to 4.40	V
			Expanded (Q)	20% overshoot duration	–0.75 to 4.25	V
				10% overshoot duration	–0.75 to 4.35	V
				8% overshoot duration[5]	–0.75 to 4.40	V
T_{STG}	Storage temperature (ambient)				–65 to 150	°C
T_{SOL}	Maximum soldering temperature[6] (TQG144, CPG196, CSG225, CSG324, CSG484, and FTG256)				+260	°C
	Maximum soldering temperature[6] (Pb-free packages: FGG484, FGG676, and FGG900)				+250	°C
	Maximum soldering temperature[6] (Pb packages: CS484, FT256, FG484, FG676, and FG900)				+220	°C
T_j	Maximum junction temperature[6]				+125	°C

Notes:

1. Stresses beyond those listed under Absolute Maximum Ratings might cause permanent damage to the device. These are stress ratings only, and functional operation of the device at these or any other conditions beyond those listed under Operating Conditions is not implied. Exposure to Absolute Maximum Ratings conditions for extended periods of time might affect device reliability.
2. When programming eFUSE, $V_{FS} \leq V_{CCAUX}$. Requires up to 40 mA current. For read mode, V_{FS} can be between GND and 3.45 V.
3. I/O absolute maximum limit applied to DC and AC signals. Overshoot duration is the percentage of a data period that the I/O is stressed beyond 3.45V.
4. For I/O operation, refer to UG381: *Spartan-6 FPGA SelectIO Resources User Guide*.
5. Maximum percent overshoot duration to meet 4.40V maximum.
6. T_{SOL} is the maximum soldering temperature for component bodies. For soldering guidelines and thermal considerations, see UG385: *Spartan-6 FPGA Packaging and Pinout Specification*.

Table 2: **Recommended Operating Conditions(1)**

Symbol	Description			Min	Typ	Max	Units
V_{CCINT}	Internal supply voltage relative to GND	-3, -3N, -2	Standard performance(2)	1.14	1.2	1.26	V
		-3, -2	Extended performance(2)	1.2	1.23	1.26	V
		-1L	Standard performance(2)	0.95	1.0	1.05	V
V_{CCAUX}(3)(4)	Auxiliary supply voltage relative to GND	V_{CCAUX} = 2.5V(5)		2.375	2.5	2.625	V
		V_{CCAUX} = 3.3V		3.15	3.3	3.45	V
V_{CCO}(6)(7)(8)	Output supply voltage relative to GND			1.1	–	3.45	V
V_{IN}	Input voltage relative to GND	All I/O standards (except PCI)	Commercial temperature (C)	–0.5	–	4.0	V
			Industrial temperature (I)	–0.5	–	3.95	V
			Expanded (Q) temperature	–0.5	–	3.95	V
		PCI I/O standard(9)		–0.5	–	V_{CCO} + 0.5	V
I_{IN}(10)	Maximum current through pin using PCI I/O standard when forward biasing the clamp diode.(9)		Commercial (C) and Industrial temperature (I)	–	–	10	mA
			Expanded (Q) temperature	–	–	7	mA
	Maximum current through pin when forward biasing the ground clamp diode.			–	–	10	mA
V_{BATT}(11)	Battery voltage relative to GND, T_j = 0°C to +85°C (LX75, LX75T, LX100, LX100T, LX150, and LX150T only)			1.0	–	3.6	V
T_j	Junction temperature operating range	Commercial (C) range		0	–	85	°C
		Industrial temperature (I) range		–40	–	100	°C
		Expanded (Q) temperature range		–40	–	125	°C

Notes:

1. All voltages are relative to ground.
2. See *Interface Performances for Memory Interfaces* in Table 25. The extended performance range is specified for designs not using the standard V_{CCINT} voltage range. The standard V_{CCINT} voltage range is used for:
   - Designs that do not use an MCB
   - LX4 devices
   - Devices in the TQG144 or CPG196 packages
   - Devices with the -3N speed grade
3. Recommended maximum voltage droop for V_{CCAUX} is 10 mV/ms.
4. During configuration, if V_{CCO_2} is 1.8V, then V_{CCAUX} must be 2.5V.
5. The -1L devices require V_{CCAUX} = 2.5V when using the LVDS_25, LVDS_33, BLVDS_25, LVPECL_25, RSDS_25, RSDS_33, PPDS_25, and PPDS_33 I/O standards on inputs. LVPECL_33 is not supported in the -1L devices.
6. Configuration data is retained even if V_{CCO} drops to 0V.
7. Includes V_{CCO} of 1.2V, 1.5V, 1.8V, 2.5V, and 3.3V.
8. For PCI systems, the transmitter and receiver should have common supplies for V_{CCO}.
9. Devices with a -1L speed grade do not support Xilinx PCI IP.
10. Do not exceed a total of 100 mA per bank.
11. V_{BATT} is required to maintain the battery backed RAM (BBR) AES key when V_{CCAUX} is not applied. Once V_{CCAUX} is applied, V_{BATT} can be unconnected. When BBR is not used, Xilinx recommends connecting to V_{CCAUX} or GND. However, V_{BATT} can be unconnected.

Table 3: **eFUSE Programming Conditions(1)**

Symbol	Description	Min	Typ	Max	Units
V_{FS}(2)	External voltage supply	3.2	3.3	3.4	V
I_{FS}	V_{FS} supply current	–	–	40	mA
V_{CCAUX}	Auxiliary supply voltage relative to GND	3.2	3.3	3.45	V
R_{FUSE}(3)	External resistor from R_{FUSE} pin to GND	1129	1140	1151	Ω
V_{CCINT}	Internal supply voltage relative to GND	1.14	1.2	1.26	V
t_j	Temperature range	15	–	85	°C

Notes:

1. These specifications apply during programming of the eFUSE AES key. Programming is only supported through JTAG.The AES key is only supported in the following devices: LX75, LX75T, LX100, LX100T, LX150, and LX150T.
2. When programming eFUSE, V_{FS} must be less than or equal to V_{CCAUX}. When not programming or when eFUSE is not used, Xilinx recommends connecting V_{FS} to GND. However, V_{FS} can be between GND and 3.45 V.
3. An R_{FUSE} resistor is required when programming the eFUSE AES key. When not programming or when eFUSE is not used, Xilinx recommends connecting the R_{FUSE} pin to V_{CCAUX} or GND. However, R_{FUSE} can be unconnected.

Table 4: **DC Characteristics Over Recommended Operating Conditions**

Symbol	Description		Min	Typ	Max	Units
V_{DRINT}	Data retention V_{CCINT} voltage (below which configuration data might be lost)		0.8	–	–	V
V_{DRAUX}	Data retention V_{CCAUX} voltage (below which configuration data might be lost)		2.0	–	–	V
I_{REF}	V_{REF} leakage current per pin for commercial (C) and industrial (I) devices		–10	–	10	µA
	V_{REF} leakage current per pin for expanded (Q) devices		–15	–	15	µA
I_L	Input or output leakage current per pin (sample-tested) for commercial (C) and industrial (I) devices		–10	–	10	µA
	Input or output leakage current per pin (sample-tested) for expanded (Q) devices		–15	–	15	µA
I_{HS}	Leakage current on pins during hot socketing with FPGA unpowered	All pins except PROGRAM_B, DONE, and JTAG pins when HSWAPEN = 1	–20	–	20	µA
		PROGRAM_B, DONE, and JTAG pins, or other pins when HSWAPEN = 0	$I_{HS(HSWAPEN = 1)} + I_{RPU}$			µA
C_{IN}[1]	Die input capacitance at the pad		–	–	10	pF
I_{RPU}	Pad pull-up (when selected) @ V_{IN} = 0V, V_{CCO} = 3.3V or V_{CCAUX} = 3.3V		200	–	500	µA
	Pad pull-up (when selected) @ V_{IN} = 0V, V_{CCO} = 2.5V or V_{CCAUX} = 2.5V		120	–	350	µA
	Pad pull-up (when selected) @ V_{IN} = 0V, V_{CCO} = 1.8V		60	–	200	µA
	Pad pull-up (when selected) @ V_{IN} = 0V, V_{CCO} = 1.5V		40	–	150	µA
	Pad pull-up (when selected) @ V_{IN} = 0V, V_{CCO} = 1.2V		12	–	100	µA
I_{RPD}	Pad pull-down (when selected) @ V_{IN} = V_{CCO}, V_{CCAUX} = 3.3V		200	–	550	µA
	Pad pull-down (when selected) @ V_{IN} = V_{CCO}, V_{CCAUX} = 2.5V		140	–	400	µA
I_{BATT}[2]	Battery supply current		–	–	150	nA
R_{DT}[3]	Resistance of optional input differential termination circuit, V_{CCAUX} = 3.3V		–	100	–	Ω
R_{IN_TERM}[5]	Thevenin equivalent resistance of programmable input termination to V_{CCO} (UNTUNED_SPLIT_25) for commercial (C) and industrial (I) devices		23	25	55	Ω
	Thevenin equivalent resistance of programmable input termination to V_{CCO} (UNTUNED_SPLIT_25) for expanded (Q) devices		20	25	55	Ω
	Thevenin equivalent resistance of programmable input termination to V_{CCO} (UNTUNED_SPLIT_50) for commercial (C) and industrial (I) devices		39	50	72	Ω
	Thevenin equivalent resistance of programmable input termination to V_{CCO} (UNTUNED_SPLIT_50) for expanded (Q) devices		32	50	74	Ω
	Thevenin equivalent resistance of programmable input termination to V_{CCO} (UNTUNED_SPLIT_75) for commercial (C) and industrial (I) devices		56	75	109	Ω
	Thevenin equivalent resistance of programmable input termination to V_{CCO} (UNTUNED_SPLIT_75) for expanded (Q) devices		47	75	115	Ω
R_{OUT_TERM}	Thevenin equivalent resistance of programmable output termination (UNTUNED_25)		11	25	52	Ω
	Thevenin equivalent resistance of programmable output termination (UNTUNED_50)		21	50	96	Ω
	Thevenin equivalent resistance of programmable output termination (UNTUNED_75)		29	75	145	Ω

Notes:

1. The C_{IN} measurement represents the die capacitance at the pad, not including the package.
2. Maximum value specified for worst case process at 25°C. LX75, LX75T, LX100, LX100T, LX150, and LX150T only.
3. Refer to IBIS models for R_{DT} variation and for values at V_{CCAUX} = 2.5V. IBIS values for R_{DT} are valid for all temperature ranges.
4. V_{CCO2} is not required for data retention. The minimum V_{CCO2} for power-on reset and configuration is 1.65V.
5. Termination resistance to a V_{CCO}/2 level.

Quiescent Current

Typical values for quiescent supply current are specified at nominal voltage, 25°C junction temperatures (T_j). Quiescent supply current is specified by speed grade for Spartan-6 devices. Xilinx recommends analyzing static power consumption using the Xilinx Power Estimator (XPE) tool (download at http://www.xilinx.com/power) for conditions other than those specified in Table 5.

Table 5: **Typical Quiescent Supply Current**

Symbol	Description	Device	Speed Grade				Units
			-3	-3N	-2	-1L	
I_{CCINTQ}	Quiescent V_{CCINT} supply current	LX4	4.0	4.0	4.0	2.4	mA
		LX9	4.0	4.0	4.0	2.4	mA
		LX16	6.0	6.0	6.0	4.0	mA
		LX25	11.0	11.0	11.0	6.6	mA
		LX25T	11.0	11.0	11.0	N/A	mA
		LX45	15.0	15.0	15.0	9.0	mA
		LX45T	15.0	15.0	15.0	N/A	mA
		LX75	29.0	29.0	29.0	17.4	mA
		LX75T	29.0	29.0	29.0	N/A	mA
		LX100	36.0	36.0	36.0	21.6	mA
		LX100T	36.0	36.0	36.0	N/A	mA
		LX150	51.0	51.0	51.0	31.0	mA
		LX150T	51.0	51.0	51.0	N/A	mA
I_{CCOQ}	Quiescent V_{CCO} supply current	LX4	1.0	1.0	1.0	1.0	mA
		LX9	1.0	1.0	1.0	1.0	mA
		LX16	2.0	2.0	2.0	2.0	mA
		LX25	2.0	2.0	2.0	2.0	mA
		LX25T	2.0	2.0	2.0	N/A	mA
		LX45	3.0	3.0	3.0	3.0	mA
		LX45T	3.0	3.0	3.0	N/A	mA
		LX75	4.0	4.0	4.0	4.0	mA
		LX75T	4.0	4.0	4.0	N/A	mA
		LX100	5.0	5.0	5.0	5.0	mA
		LX100T	5.0	5.0	5.0	N/A	mA
		LX150	7.0	7.0	7.0	7.0	mA
		LX150T	7.0	7.0	7.0	N/A	mA

Table 5: **Typical Quiescent Supply Current *(Cont'd)***

Symbol	Description	Device	Speed Grade				Units
			-3	-3N	-2	-1L	
I_{CCAUXQ}	Quiescent V_{CCAUX} supply current	LX4	2.5	2.5	2.5	2.5	mA
		LX9	2.5	2.5	2.5	2.5	mA
		LX16	3.0	3.0	3.0	3.0	mA
		LX25	4.0	4.0	4.0	4.0	mA
		LX25T	4.0	4.0	4.0	N/A	mA
		LX45	5.0	5.0	5.0	5.0	mA
		LX45T	5.0	5.0	5.0	N/A	mA
		LX75	7.0	7.0	7.0	7.0	mA
		LX75T	7.0	7.0	7.0	N/A	mA
		LX100	9.0	9.0	9.0	9.0	mA
		LX100T	9.0	9.0	9.0	N/A	mA
		LX150	12.0	12.0	12.0	12.0	mA
		LX150T	12.0	12.0	12.0	N/A	mA

Notes:

1. Typical values are specified at nominal voltage, 25°C junction temperatures (Tj). Industrial (I) grade devices have the same typical values as commercial (C) grade devices at 25°C, but higher values at 100°C. Use the XPE tool to calculate 100°C values. Nominal V_{CCINT} is 1.20V; use the XPE tool to calculate 1.23V values for the nominal V_{CCINT} of the extended performance range.
2. Typical values are for blank configured devices with no output current loads, no active input pull-up resistors, all I/O pins are 3-state and floating.
3. If differential signaling is used, more accurate quiescent current estimates can be obtained by using the Xilinx Power Estimator (XPE) or Xilinx Power Analyzer (XPA) tools.

Table 6: **Power Supply Ramp Time**

Symbol	Description	Speed Grade	Ramp Time	Units
V_{CCINTR}	Internal supply voltage ramp time	-3, -3N, -2	0.20 to 50.0	ms
		-1L	0.20 to 40.0	ms
V_{CCO2}(1)	Output drivers bank 2 supply voltage ramp time	All	0.20 to 50.0	ms
V_{CCAUXR}	Auxiliary supply voltage ramp time	All	0.20 to 50.0	ms

Notes:

1. The minimum V_{CCO2} for power-on reset and configuration is 1.65V.
2. Spartan-6 FPGAs require a certain amount of supply current during power-on to insure proper device initialization. The actual current consumed depends on the power-on ramp rate of the power supply. Use the Xilinx Power Estimator (XPE) or Xilinx Power Analyzer (XPA) tools to estimate current drain on these supplies. Spartan-6 devices do not have a required power-on sequence.

SelectIO™ Interface DC Input and Output Levels

Table 7: **Recommended Operating Conditions for User I/Os Using Single-Ended Standards**

I/O Standard	V_{CCO} for Drivers[1]			V_{REF} for Inputs		
	V, Min	V, Nom	V, Max	V, Min	V, Nom	V, Max
LVTTL	3.0	3.3	3.45	V_{REF} is not used for these I/O standards		
LVCMOS33	3.0	3.3	3.45			
LVCMOS25	2.3	2.5	2.7			
LVCMOS18	1.65	1.8	1.95			
LVCMOS18_JEDEC	1.65	1.8	1.95			
LVCMOS15	1.4	1.5	1.6			
LVCMOS15_JEDEC	1.4	1.5	1.6			
LVCMOS12	1.1	1.2	1.3			
LVCMOS12_JEDEC	1.1	1.2	1.3			
PCI33_3[2]	3.0	3.3	3.45			
PCI66_3[2]	3.0	3.3	3.45			
I2C	2.7	3.0	3.45			
SMBUS	2.7	3.0	3.45			
SDIO	3.0	3.3	3.45			
MOBILE_DDR	1.7	1.8	1.9			
HSTL_I	1.4	1.5	1.6	0.68	0.75	0.9
HSTL_II	1.4	1.5	1.6	0.68	0.75	0.9
HSTL_III	1.4	1.5	1.6	–	0.9	–
HSTL_I_18	1.7	1.8	1.9	0.8	0.9	1.1
HSTL_II_18	1.7	1.8	1.9	–	0.9	–
HSTL_III_18	1.7	1.8	1.9	–	1.1	–
SSTL3_I	3.0	3.3	3.45	1.3	1.5	1.7
SSTL3_II	3.0	3.3	3.45	1.3	1.5	1.7
SSTL2_I	2.3	2.5	2.7	1.13	1.25	1.38
SSTL2_II	2.3	2.5	2.7	1.13	1.25	1.38
SSTL18_I	1.7	1.8	1.9	0.833	0.9	0.969
SSTL18_II	1.7	1.8	1.9	0.833	0.9	0.969
SSTL15_II	1.425	1.5	1.575	0.69	0.75	0.81

Notes:

1. V_{CCO} range required when using I/O standard for an output. Also required for MOBILE_DDR, PCI33_3, LVCMOS18_JEDEC, LVCMOS15_JEDEC, and LVCMOS12_JEDEC inputs, and for LVCMOS25 inputs when V_{CCAUX} = 3.3V.
2. For PCI systems, the transmitter and receiver should have common supplies for V_{CCO}.

Table 8: **Recommended Operating Conditions for User I/Os Using Differential Signal Standards**

I/O Standard	V_{CCO} for Drivers		
	V, Min	V, Nom	V, Max
LVDS_33	3.0	3.3	3.45
LVDS_25	2.25	2.5	2.75
BLVDS_25	2.25	2.5	2.75
MINI_LVDS_33	3.0	3.3	3.45
MINI_LVDS_25	2.25	2.5	2.75
LVPECL_33(1)	N/A–Inputs Only		
LVPECL_25	N/A–Inputs Only		
RSDS_33	3.0	3.3	3.45
RSDS_25	2.25	2.5	2.75
TMDS_33(1)	3.14	3.3	3.45
PPDS_33	3.0	3.3	3.45
PPDS_25	2.25	2.5	2.75
DISPLAY_PORT	2.3	2.5	2.7
DIFF_MOBILE_DDR	1.7	1.8	1.9
DIFF_HSTL_I	1.4	1.5	1.6
DIFF_HSTL_II	1.4	1.5	1.6
DIFF_HSTL_III	1.4	1.5	1.6
DIFF_HSTL_I_18	1.7	1.8	1.9
DIFF_HSTL_II_18	1.7	1.8	1.9
DIFF_HSTL_III_18	1.7	1.8	1.9
DIFF_SSTL3_I	3.0	3.3	3.45
DIFF_SSTL3_II	3.0	3.3	3.45
DIFF_SSTL2_I	2.3	2.5	2.7
DIFF_SSTL2_II	2.3	2.5	2.7
DIFF_SSTL18_I	1.7	1.8	1.9
DIFF_SSTL18_II	1.7	1.8	1.9
DIFF_SSTL15_II	1.425	1.5	1.575

Notes:

1. LVPECL_33 and TMDS_33 inputs require V_{CCAUX} = 3.3V nominal.

In Table 9 and Table 10, values for V_{IL} and V_{IH} are recommended input voltages. Values for I_{OL} and I_{OH} are guaranteed over the recommended operating conditions at the V_{OL} and V_{OH} test points. Only selected standards are tested. These are chosen to ensure that all standards meet their specifications. The selected standards are tested at a minimum V_{CCO} with the respective V_{OL} and V_{OH} voltage levels shown. Other standards are sample tested.

Table 9: **Single-Ended I/O Standard DC Input and Output Levels**

I/O Standard	V_{IL}		V_{IH}		V_{OL}	V_{OH}	I_{OL}	I_{OH}
	V, Min	V, Max	V, Min	V, Max	V, Max	V, Min	mA	mA
LVTTL	–0.5	0.8	2.0	4.1	0.4	2.4	Note 2	Note 2
LVCMOS33	–0.5	0.8	2.0	4.1	0.4	V_{CCO} – 0.4	Note 2	Note 2
LVCMOS25	–0.5	0.7	1.7	4.1	0.4	V_{CCO} – 0.4	Note 2	Note 2
LVCMOS18	–0.5	0.38	0.8	4.1	0.45	V_{CCO} – 0.45	Note 2	Note 2
LVCMOS18 (-1L)	–0.5	0.33	0.71	4.1	0.45	V_{CCO} – 0.45	Note 2	Note 2
LVCMOS18_JEDEC	–0.5	35% V_{CCO}	65% V_{CCO}	4.1	0.45	V_{CCO} – 0.45	Note 2	Note 2
LVCMOS15	–0.5	0.38	0.8	4.1	25% V_{CCO}	75% V_{CCO}	Note 3	Note 3
LVCMOS15 (-1L)	–0.5	0.33	0.71	4.1	25% V_{CCO}	75% V_{CCO}	Note 3	Note 3
LVCMOS15_JEDEC	–0.5	35% V_{CCO}	65% V_{CCO}	4.1	25% V_{CCO}	75% V_{CCO}	Note 3	Note 3
LVCMOS12	–0.5	0.38	0.8	4.1	0.4	V_{CCO} – 0.4	Note 4	Note 4
LVCMOS12 (-1L)	–0.5	0.33	0.71	4.1	0.4	V_{CCO} – 0.4	Note 4	Note 4
LVCMOS12_JEDEC	–0.5	35% V_{CCO}	65% V_{CCO}	4.1	0.4	V_{CCO} – 0.4	Note 4	Note 4
PCI33_3	–0.5	30% V_{CCO}	50% V_{CCO}	V_{CCO} + 0.5	10% V_{CCO}	90% V_{CCO}	1.5	–0.5
PCI66_3	–0.5	30% V_{CCO}	50% V_{CCO}	V_{CCO} + 0.5	10% V_{CCO}	90% V_{CCO}	1.5	–0.5
I2C	–0.5	25% V_{CCO}	70% V_{CCO}	4.1	20% V_{CCO}	–	3	–
SMBUS	–0.5	0.8	2.1	4.1	0.4	–	4	–
SDIO	–0.5	12.5% V_{CCO}	75% V_{CCO}	4.1	12.5% V_{CCO}	75% V_{CCO}	0.1	–0.1
MOBILE_DDR	–0.5	20% V_{CCO}	80% V_{CCO}	4.1	10% V_{CCO}	90% V_{CCO}	0.1	–0.1
HSTL_I	–0.5	V_{REF} – 0.1	V_{REF} + 0.1	4.1	0.4	V_{CCO} – 0.4	8	–8
HSTL_II	–0.5	V_{REF} – 0.1	V_{REF} + 0.1	4.1	0.4	V_{CCO} – 0.4	16	–16
HSTL_III	–0.5	V_{REF} – 0.1	V_{REF} + 0.1	4.1	0.4	V_{CCO} – 0.4	24	–8
HSTL_I_18	–0.5	V_{REF} – 0.1	V_{REF} + 0.1	4.1	0.4	V_{CCO} – 0.4	11	–11
HSTL_II_18	–0.5	V_{REF} – 0.1	V_{REF} + 0.1	4.1	0.4	V_{CCO} – 0.4	22	–22
HSTL_III_18	–0.5	V_{REF} – 0.1	V_{REF} + 0.1	4.1	0.4	V_{CCO} – 0.4	30	–11
SSTL3_I	–0.5	V_{REF} – 0.2	V_{REF} + 0.2	4.1	V_{TT} – 0.6	V_{TT} + 0.6	8	–8
SSTL3_II	–0.5	V_{REF} – 0.2	V_{REF} + 0.2	4.1	V_{TT} – 0.8	V_{TT} + 0.8	16	–16
SSTL2_I	–0.5	V_{REF} – 0.15	V_{REF} + 0.15	4.1	V_{TT} – 0.61	V_{TT} + 0.61	8.1	–8.1
SSTL2_II	–0.5	V_{REF} – 0.15	V_{REF} + 0.15	4.1	V_{TT} – 0.81	V_{TT} + 0.81	16.2	–16.2
SSTL18_I	–0.5	V_{REF} – 0.125	V_{REF} + 0.125	4.1	V_{TT} – 0.47	V_{TT} + 0.47	6.7	–6.7
SSTL18_II	–0.5	V_{REF} – 0.125	V_{REF} + 0.125	4.1	V_{TT} – 0.60	V_{TT} + 0.60	13.4	–13.4
SSTL15_II	–0.5	V_{REF} – 0.1	V_{REF} + 0.1	4.1	V_{TT} – 0.4	V_{TT} + 0.4	13.4	–13.4

Notes:

1. Tested according to relevant specifications.
2. Using drive strengths of 2, 4, 6, 8, 12, 16, or 24 mA.
3. Using drive strengths of 2, 4, 6, 8, 12, or 16 mA.
4. Using drive strengths of 2, 4, 6, 8, or 12 mA.
5. For more information, refer to UG381: *Spartan-6 FPGA SelectIO Resources User Guide*.

Table 10: **Differential I/O Standard DC Input and Output Levels**

I/O Standard	V_{ID}		V_{ICM}		V_{OD}		V_{OCM}		V_{OH}	V_{OL}
	mV, Min	mV, Max	V, Min	V, Max	mV, Min	mV, Max	V, Min	V, Max	V, Min	V, Max
LVDS_33(2)(3)	100	600	0.3	2.35	247	454	1.125	1.375	–	–
LVDS_25(2)(3)	100	600	0.3	2.35	247	454	1.125	1.375	–	–
BLVDS_25(2)(3)	100	–	0.3	2.35	240	460	Typical 50% V_{CCO}		–	–
MINI_LVDS_33	200	600	0.3	1.95	300	600	1.0	1.4	–	–
MINI_LVDS_25	200	600	0.3	1.95	300	600	1.0	1.4	–	–
LVPECL_33(2)(3)	100	1000	0.3	2.8(1)	Inputs only					
LVPECL_25(2)(3)	100	1000	0.3	1.95	Inputs only					
RSDS_33(2)(3)	100	–	0.3	1.5	100	400	1.0	1.4	–	–
RSDS_25(2)(3)	100	–	0.3	1.5	100	400	1.0	1.4	–	–
TMDS_33	150	1200	2.7	3.23(1)	400	800	V_{CCO} – 0.405	V_{CCO} – 0.190	–	–
PPDS_33(2)(3)	100	400	0.2	2.3	100	400	0.5	1.4	–	–
PPDS_25(2)(3)	100	400	0.2	2.3	100	400	0.5	1.4	–	–
DISPLAY_PORT	190	1260	0.3	2.35	–	–	Typical 50% V_{CCO}		–	–
DIFF_MOBILE_DDR	100	–	0.78	1.02	–	–	–	–	90% V_{CCO}	10% V_{CCO}
DIFF_HSTL_I	100	–	0.68	0.9	–	–	–	–	V_{CCO} – 0.4	0.4
DIFF_HSTL_II	100	–	0.68	0.9	–	–	–	–	V_{CCO} – 0.4	0.4
DIFF_HSTL_III	100	–	0.68	0.9	–	–	–	–	V_{CCO} – 0.4	0.4
DIFF_HSTL_I_18	100	–	0.8	1.1	–	–	–	–	V_{CCO} – 0.4	0.4
DIFF_HSTL_II_18	100	–	0.8	1.1	–	–	–	–	V_{CCO} – 0.4	0.4
DIFF_HSTL_III_18	100	–	0.8	1.1	–	–	–	–	V_{CCO} – 0.4	0.4
DIFF_SSTL3_I	100	–	1.0	1.9	–	–	–	–	V_{TT} + 0.6	V_{TT} – 0.6
DIFF_SSTL3_II	100	–	1.0	1.9	–	–	–	–	V_{TT} + 0.8	V_{TT} – 0.8
DIFF_SSTL2_I	100	–	1.0	1.5	–	–	–	–	V_{TT} + 0.61	V_{TT} – 0.61
DIFF_SSTL2_II	100	–	1.0	1.5	–	–	–	–	V_{TT} + 0.81	V_{TT} – 0.81
DIFF_SSTL18_I	100	–	0.7	1.1	–	–	–	–	V_{TT} + 0.47	V_{TT} – 0.47
DIFF_SSTL18_II	100	–	0.7	1.1	–	–	–	–	V_{TT} + 0.6	V_{TT} – 0.6
DIFF_SSTL15_II	100	–	0.55	0.95	–	–	–	–	V_{TT} + 0.4	V_{TT} – 0.4

Notes:

1. LVPECL_33 and TMDS_33 maximum V_{ICM} is the lower of V (maximum) or V_{CCAUX} – (V_{ID}/2)
2. When V_{CCAUX} = 3.3V, the DCD can be higher than 5% for V_{ICM} < 0.7V when using these I/O standards: LVDS_25, LVDS_33, BLVDS_25, LVPECL_25, LVPECL_33, RSDS_25, RSDS_33, PPDS_25, and PPDS_33.
3. The -1L devices require V_{CCAUX} = 2.5V when using the LVDS_25, LVDS_33, BLVDS_25, LVPECL_25, RSDS_25, RSDS_33, PPDS_25, and PPDS_33 I/O standards on inputs. LVPECL_33 is not supported in the -1L devices.

eFUSE Read Endurance

Table 11 lists the minimum guaranteed number of read cycle operations for Device DNA and for the AES eFUSE key. For more information, see UG380: *Spartan-6 FPGA Configuration User Guide*.

Table 11: **eFUSE Read Endurance**

Symbol	Description	Speed Grade				Units (Min)
		-3	-3N	-2	-1L	
DNA_CYCLES	Number of DNA_PORT READ operations or JTAG ISC_DNA read command operations. Unaffected by SHIFT operations.	30,000,000				Read Cycles
AES_CYCLES	Number of JTAG FUSE_KEY or FUSE_CNTL read command operations. Unaffected by SHIFT operations.	30,000,000				Read Cycles

GTP Transceiver Specifications

GTP transceivers are available in the Spartan-6 LXT devices. See DS160: *Spartan-6 Family Overview* for more information.

GTP Transceiver DC Characteristics

Table 12: **Absolute Maximum Ratings for GTP Transceivers(1)**

Symbol	Description	MIn	Max	Units
MGTAVCC	Analog supply voltage for the GTP transmitter and receiver circuits relative to GND	–0.5	1.32	V
MGTAVTTTX	Analog supply voltage for the GTP transmitter termination circuit relative to GND	–0.5	1.32	V
MGTAVTTRX	Analog supply voltage for the GTP receiver termination circuit relative to GND	–0.5	1.32	V
MGTAVCCPLL	Analog supply voltage for the GTP transmitter and receiver PLL circuits relative to GND	–0.5	1.32	V
MGTAVTTRCAL	Analog supply voltage for the resistor calibration circuit of the GTP transceiver bank (top or bottom)	–0.5	1.32	V
V_{IN}	Receiver (RXP/RXN) and Transmitter (TXP/TXN) absolute input voltage	–0.5	1.32	V
$V_{MGTREFCLK}$	Reference clock absolute input voltage	–0.5	1.32	V

Notes:
1. Stresses beyond those listed under Absolute Maximum Ratings might cause permanent damage to the device. These are stress ratings only, and functional operation of the device at these or any other conditions beyond those listed under Operating Conditions is not implied. Exposure to Absolute Maximum Ratings conditions for extended periods of time might affect device reliability.

Table 13: **Recommended Operating Conditions for GTP Transceivers(1)(2)(3)**

Symbol	Description	Min	Typ	Max	Units
MGTAVCC	Analog supply voltage for the GTP transmitter and receiver circuits relative to GND	1.14	1.20	1.26	V
MGTAVTTTX	Analog supply voltage for the GTP transmitter termination circuit relative to GND	1.14	1.20	1.26	V
MGTAVTTRX	Analog supply voltage for the GTP receiver termination circuit relative to GND	1.14	1.20	1.26	V
MGTAVCCPLL	Analog supply voltage for the GTP transmitter and receiver PLL circuits relative to GND	1.14	1.20	1.26	V
MGTAVTTRCAL	Analog supply voltage for the resistor calibration circuit of the GTP transceiver bank (top or bottom)	1.14	1.20	1.26	V

Notes:
1. Each voltage listed requires the filter circuit described in UG386: *Spartan-6 FPGA GTP Transceivers User Guide*.
2. Voltages are specified for the temperature range of T_j = –40°C to +125°C.
3. The voltage level of MGTAVCCPLL must not exceed the voltage level of MGTAVCC +10mV. The voltage level of MGTAVCC must not exceed the voltage level of MGTAVCCPLL.

Table 14: **GTP Transceiver Current Supply (per Lane)**

Symbol	Description	Typ[1]	Max	Units
$I_{MGTAVCC}$	GTP transceiver internal analog supply current	40.4	Note 2	mA
$I_{MGTAVTTTX}$	GTP transmitter termination supply current	27.4		mA
$I_{MGTAVTTRX}$	GTP receiver termination supply current	13.6		mA
$I_{MGTAVCCPLL}$	GTP transmitter and receiver PLL supply current	28.7		mA
$R_{MGTRREF}$	Precision reference resistor for internal calibration termination	50.0 ± 1% tolerance		Ω

Notes:
1. Typical values are specified at nominal voltage, 25°C, with a 2.5 Gb/s line rate, with a shared PLL use mode.
2. Values for currents of other transceiver configurations and conditions can be obtained by using the Xilinx Power Estimator (XPE) or Xilinx Power Analyzer (XPA) tools.

Table 15: **GTP Transceiver Quiescent Supply Current (per Lane)[1][2][3][4]**

Symbol	Description	Typ[5]	Max	Units
$I_{MGTAVCCQ}$	Quiescent MGTAVCC supply current	1.7	Note 2	mA
$I_{MGTAVTTTXQ}$	Quiescent MGTAVTTTX supply current	0.1		mA
$I_{MGTAVTTRXQ}$	Quiescent MGTAVTTRX supply current	1.2		mA
$I_{MGTAVCCPLLQ}$	Quiescent MGTAVCCPLL supply current	1.0		mA

Notes:
1. Device powered and unconfigured.
2. Currents for conditions other than values specified in this table can be obtained by using the Xilinx Power Estimator (XPE) or Xilinx Power Analyzer (XPA) tools.
3. GTP transceiver quiescent supply current for an entire device can be calculated by multiplying the values in this table by the number of available GTP transceivers.
4. Does not include power-up MGTAVTTRCAL supply current during device configuration.
5. Typical values are specified at nominal voltage, 25°C.

GTP Transceiver DC Input and Output Levels

Table 16 summarizes the DC output specifications of the GTP transceivers in Spartan-6 FPGAs. Figure 1 shows the single-ended output voltage swing. Figure 2 shows the peak-to-peak differential output voltage.

Consult UG386: *Spartan-6 FPGA GTP Transceivers User Guide* for further details.

Table 16: **GTP Transceiver DC Specifications**

Symbol	DC Parameter	Conditions	Min	Typ	Max	Units
DV_{PPIN}	Differential peak-to-peak input voltage	External AC coupled	140	–	2000	mV
V_{IN}	Absolute input voltage	DC coupled MGTAVTTRX = 1.2V	–400	–	MGTAVTTRX	mV
V_{CMIN}	Common mode input voltage	DC coupled MGTAVTTRX = 1.2V	–	3/4 MGTAVTTRX	–	mV
DV_{PPOUT}	Differential peak-to-peak output voltage(1)	Transmitter output swing is set to maximum setting	1000	–	–	mV
V_{SEOUT}	Single-ended output voltage swing(1)		–	–	500	mV
$V_{CMOUTDC}$	Common mode output voltage	Equation based	MGTAVTTTX – V_{SEOUT}/2			mV
R_{IN}	Differential input resistance		80	100	130	Ω
R_{OUT}	Differential output resistance		80	100	130	Ω
T_{OSKEW}	Transmitter output skew		–	–	15	ps
C_{EXT}	Recommended external AC coupling capacitor(2)		75	100	200	nF

Notes:
1. The output swing and preemphasis levels are programmable using the attributes discussed in UG386: *Spartan-6 FPGA GTP Transceivers User Guide* and can result in values lower than reported in this table. DV_{PPOUT} is the minimum guaranteed value at the maximum setting. Refer to UG386: *Spartan-6 FPGA GTP Transceivers User Guide* for nominal values.
2. Other values can be used as appropriate to conform to specific protocols and standards.

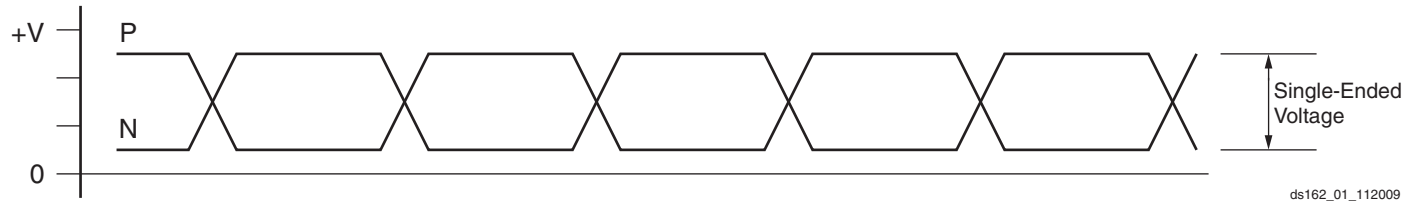

Figure 1: **Single-Ended Peak-to-Peak Voltage**

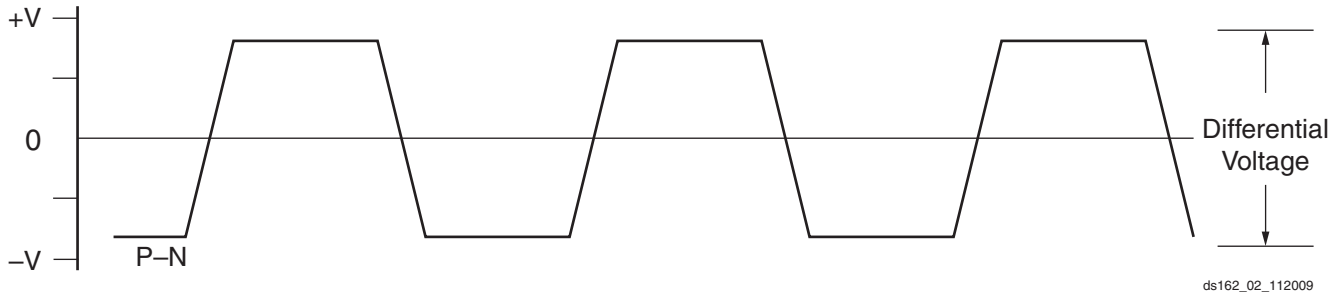

Figure 2: **Differential Peak-to-Peak Voltage**

Table 17 summarizes the DC specifications of the clock input of the GTP transceiver. Consult UG386: *Spartan-6 FPGA GTP Transceivers User Guide* for further details.

Table 17: **GTP Transceiver Clock DC Input Level Specification**

Symbol	DC Parameter	Min	Typ	Max	Units
V_{IDIFF}	Differential peak-to-peak input voltage	200	800	2000	mV
R_{IN}	Differential input resistance	80	100	120	Ω
C_{EXT}	Required external AC coupling capacitor	–	100	–	nF

GTP Transceiver Switching Characteristics

Consult UG386: *Spartan-6 FPGA GTP Transceivers User Guide* for further information.

Table 18: **GTP Transceiver Performance**

Symbol	Description	Speed Grade				Units
		-3	-3N	-2	-1L	
F_{GTPMAX}	Maximum GTP transceiver data rate	3.2	3.2	2.7	N/A	Gb/s
$F_{GTPRANGE1}$	GTP transceiver data rate range when PLL_TXDIVSEL_OUT = 1	1.88 to 3.2	1.88 to 3.2	1.88 to 2.7	N/A	Gb/s
$F_{GTPRANGE2}$	GTP transceiver data rate range when PLL_TXDIVSEL_OUT = 2	0.94 to 1.62	0.94 to 1.62	0.94 to 1.62	N/A	Gb/s
$F_{GTPRANGE3}$	GTP transceiver data rate range when PLL_TXDIVSEL_OUT = 4	0.6 to 0.81	0.6 to 0.81	0.6 to 0.81	N/A	Gb/s
$F_{GPLLMAX}$	Maximum PLL frequency	1.62	1.62	1.62	N/A	GHz
$F_{GPLLMIN}$	Minimum PLL frequency	0.94	0.94	0.94	N/A	GHz

Table 19: **GTP Transceiver Dynamic Reconfiguration Port (DRP) Switching Characteristics**

Symbol	Description	Speed Grade				Units
		-3	-3N	-2	-1L	
$F_{GTPDRPCLK}$	GTP transceiver DCLK (DRP clock) maximum frequency	125	125	100	N/A	MHz

Table 20: **GTP Transceiver Reference Clock Switching Characteristics**

Symbol	Description	Conditions	All LXT Speed Grades			Units
			Min	Typ	Max	
F_{GCLK}	Reference clock frequency range		60	–	160	MHz
T_{RCLK}	Reference clock rise time	20% – 80%	–	200	–	ps
T_{FCLK}	Reference clock fall time	80% – 20%	–	200	–	ps
T_{DCREF}	Reference clock duty cycle	Transceiver PLL only	45	50	55	%
T_{LOCK}	Clock recovery frequency acquisition time	Initial PLL lock	–	–	1	ms
T_{PHASE}	Clock recovery phase acquisition time	Lock to data after PLL has locked to the reference clock	–	–	200	µs

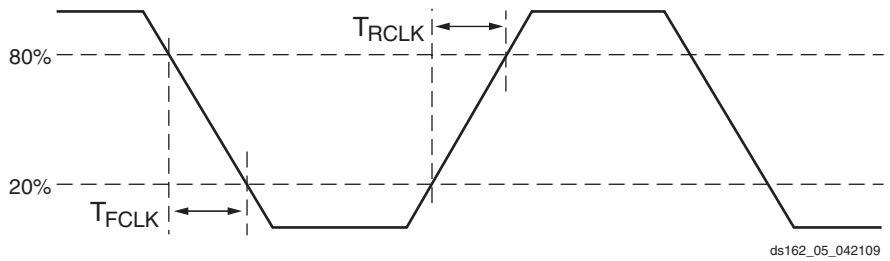

Figure 3: **Reference Clock Timing Parameters**

Table 21: **GTP Transceiver User Clock Switching Characteristics(1)**

Symbol	Description	Conditions	Speed Grade				Units
			-3	-3N	-2	-1L	
F_{TXOUT}	TXOUTCLK maximum frequency		320	320	270	N/A	MHz
F_{RXREC}	RXRECCLK maximum frequency		320	320	270	N/A	MHz
T_{RX}	RXUSRCLK maximum frequency		320	320	270	N/A	MHz
T_{RX2}	RXUSRCLK2 maximum frequency	1 byte interface	156.25	156.25	125	N/A	MHz
		2 byte interface	160	160	125	N/A	MHz
		4 byte interface	80	80	67.5	N/A	MHz
T_{TX}	TXUSRCLK maximum frequency		320	320	270	N/A	MHz
T_{TX2}	TXUSRCLK2 maximum frequency	1 byte interface	156.25	156.25	125	N/A	MHz
		2 byte interface	160	160	125	N/A	MHz
		4 byte interface	80	80	67.5	N/A	MHz

Notes:
1. Clocking must be implemented as described in UG386: *Spartan-6 FPGA GTP Transceivers User Guide*.

Table 22: **GTP Transceiver Transmitter Switching Characteristics**

Symbol	Description	Condition	Min	Typ	Max	Units
T_{RTX}	TX Rise time	20%–80%	–	140	–	ps
T_{FTX}	TX Fall time	80%–20%	–	120	–	ps
T_{LLSKEW}	TX lane-to-lane skew(1)		–	–	400	ps
$V_{TXOOBVDPP}$	Electrical idle amplitude		–	–	20	mV
$T_{TXOOBTRANSITION}$	Electrical idle transition time		–	–	50	ns
$T_{J3.125}$	Total Jitter(2)	3.125 Gb/s	–	–	0.35	UI
$D_{J3.125}$	Deterministic Jitter(2)		–	–	0.15	UI
$T_{J2.5}$	Total Jitter(2)	2.5 Gb/s	–	–	0.33	UI
$D_{J2.5}$	Deterministic Jitter(2)		–	–	0.15	UI
$T_{J1.62}$	Total Jitter(2)	1.62 Gb/s	–	–	0.20	UI
$D_{J1.62}$	Deterministic Jitter(2)		–	–	0.10	UI
$T_{J1.25}$	Total Jitter(2)	1.25 Gb/s	–	–	0.20	UI
$D_{J1.25}$	Deterministic Jitter(2)		–	–	0.10	UI
T_{J614}	Total Jitter(2)	614 Mb/s	–	–	0.10	UI
D_{J614}	Deterministic Jitter(2)		–	–	0.05	UI

Notes:
1. Using same REFCLK input with TXENPMAPHASEALIGN enabled for up to four consecutive GTP transceiver sites.
2. Using PLL_DIVSEL_FB = 2, INTDATAWIDTH = 1. These values are NOT intended for protocol specific compliance determinations.

Table 23: **GTP Transceiver Receiver Switching Characteristics**

Symbol	Description			Min	Typ	Max	Units
$T_{RXELECIDLE}$	Time for RXELECIDLE to respond to loss or restoration of data			–	75	–	ns
$R_{XOOBVDPP}$	OOB detect threshold peak-to-peak			60	–	150	mV
R_{XSST}	Receiver spread-spectrum tracking(1)		Modulated @ 33 KHz	–5000	–	0	ppm
R_{XRL}	Run length (CID)	Internal AC capacitor bypassed		–	–	150	UI
$R_{XPPMTOL}$	Data/REFCLK PPM offset tolerance	CDR 2nd-order loop disabled		–200	–	200	ppm
		CDR 2nd-order loop enabled	PLL_RXDIVSEL_OUT = 1	–2000	–	2000	ppm
			PLL_RXDIVSEL_OUT = 2	–2000	–	2000	ppm
			PLL_RXDIVSEL_OUT = 4	–1000	–	1000	ppm
SJ Jitter Tolerance(2)							
$JT_SJ_{3.125}$	Sinusoidal Jitter(3)		3.125 Gb/s	0.4	–	–	UI
$JT_SJ_{2.5}$	Sinusoidal Jitter(3)		2.5 Gb/s	0.4	–	–	UI
$JT_SJ_{1.62}$	Sinusoidal Jitter(3)		1.62 Gb/s	0.5	–	–	UI
$JT_SJ_{1.25}$	Sinusoidal Jitter(3)		1.25 Gb/s	0.5	–	–	UI
JT_SJ_{614}	Sinusoidal Jitter(3)		614 Mb/s	0.5	–	–	UI
SJ Jitter Tolerance with Stressed Eye(2)(5)							
$JT_TJSE_{3.125}$	Total Jitter with stressed eye(4)		3.125 Gb/s	0.65	–	–	UI
$JT_SJSE_{3.125}$	Sinusoidal Jitter with stressed eye		3.125 Gb/s	0.1	–	–	UI
$JT_TJSE_{2.7}$	Total Jitter with stressed eye(4)		2.7 Gb/s	0.65	–	–	UI
$JT_SJSE_{2.7}$	Sinusoidal Jitter with stressed eye		2.7 Gb/s	0.1	–	–	UI

Notes:
1. Using PLL_RXDIVSEL_OUT = 1, 2, and 4.
2. All jitter values are based on a Bit Error Ratio of $1e^{-12}$.
3. Using 80 MHz sinusoidal jitter only in the absence of deterministic and random jitter.
4. Composed of 0.37 UI DJ in the form of ISI and 0.18 UI RJ.
5. Measured using PRBS7 data pattern.

Endpoint Block for PCI Express Designs Switching Characteristics

The Endpoint block for PCI Express is available in the Spartan-6 LXT devices. Consult the Spartan-6 FPGA Integrated Endpoint Block for PCI Express for further information.

Table 24: **Maximum Performance for PCI Express Designs**

Symbol	Description	Speed Grade				Units
		-3	-3N	-2	-1L	
$F_{PCIEUSER}$	User clock maximum frequency	62.5	62.5	62.5	N/A	MHz

Performance Characteristics

This section provides the performance characteristics of some common functions and designs implemented in Spartan-6 devices. The numbers reported here are worst-case values; they have all been fully characterized. These values are subject to the same guidelines as the Switching Characteristics, page 19.

Table 25: **Interface Performances**

Description	I/O Resource	Clock Buffer	Data Width	Speed Grade				Units
				-3	-3N	-2	-1L	
Networking Applications(1)								
SDR LVDS transmitter or receiver	IOB SDR register	BUFG	–	400	400	375	250	Mb/s
DDR LVDS transmitter or receiver	ODDR2/IDDR2 register	2 BUFGs	–	800	800	750	500	Mb/s
SDR LVDS transmitter	OSERDES2	BUFPLL	2	500	500	500	250	Mb/s
			3	750	750	750	375	Mb/s
			4-8	1080	1050	950	500	Mb/s
DDR LVDS transmitter	OSERDES2	2 BUFIO2s	2	500	500	500	250	Mb/s
			3	750	750	750	375	Mb/s
			4-8	1080	1050	950	500	Mb/s
SDR LVDS receiver	ISERDES2 in RETIMED mode	BUFPLL	2	500	500	500	—	Mb/s
			3	750	750	750	—	Mb/s
			4-8	1080	1050	950	—	Mb/s
DDR LVDS receiver	ISERDES2 in RETIMED mode	2 BUFIO2s	2	500	500	500	—	Mb/s
			3	750	750	750	—	Mb/s
			4-8	1080	1050	950	—	Mb/s
Memory Interfaces (Implemented using the Spartan-6 FPGA Memory Controller Block)(2)								
Standard Performance (Standard V_{CCINT})								
DDR				400	Note 4	400	350	Mb/s
DDR2				667	Note 4	625	400	Mb/s
DDR3				800	Note 4	667	—	Mb/s
LPDDR (Mobile_DDR)				400	Note 4	400	350	Mb/s
Extended Performance (Requires Extended Performance V_{CCINT})(3)								
DDR2				800	Note 4	667	—	Mb/s

Notes:
1. Refer to XAPP1064, *Source-Synchronous Serialization and Deserialization (up to 1050 Mb/s)* and UG381, *Spartan-6 FPGA SelectIO Resources User Guide.*
2. Refer to UG388, *Spartan-6 FPGA Memory Controller User Guide*.
3. Extended Memory Controller block performance for DDR2 can be achieved using the extended performance V_{CCINT} range from Table 2.
4. The LX4 device, all devices in the TQG144 and CPG196 packages, and the -3N speed grade do not support a Memory Controller Block.

Switching Characteristics

All values represented in this data sheet are based on these speed specifications: v1.20 for -3, -3N, and -2; and v1.08 for -1L. Switching characteristics are specified on a per-speed-grade basis and can be designated as Advance, Preliminary, or Production. Each designation is defined as follows:

Advance

These specifications are based on simulations only and are typically available soon after device design specifications are frozen. Although speed grades with this designation are considered relatively stable and conservative, some under-reporting might still occur.

Preliminary

These specifications are based on complete ES (engineering sample) silicon characterization. Devices and speed grades with this designation are intended to give a better indication of the expected performance of production silicon. The probability of under-reporting delays is greatly reduced as compared to Advance data.

Production

These specifications are released once enough production silicon of a particular device family member has been characterized to provide full correlation between specifications and devices over numerous production lots. There is no under-reporting of delays, and customers receive formal notification of any subsequent changes. Typically, the slowest speed grades transition to Production before faster speed grades.

All specifications are always representative of worst-case supply voltage and junction temperature conditions.

Since individual family members are produced at different times, the migration from one category to another depends completely on the status of the fabrication process for each device.

The -1L speed grade refers to the lower-power Spartan-6 devices. The -3N speed grade refers to the Spartan-6 devices that do not support MCB functionality.

Table 26 correlates the current status of each Spartan-6 device on a per speed grade basis.

Table 26: **Spartan-6 Device Speed Grade Designations**

Device	Speed Grade Designations		
	Advance	Preliminary	Production
XC6SLX4[1]			-3, -2, -1L
XC6SLX9			-3, -3N, -2, -1L
XC6SLX16			-3, -3N, -2, -1L
XC6SLX25			-3, -3N, -2, -1L
XC6SLX25T			-3, -3N, -2
XC6SLX45			-3, -3N, -2, -1L
XC6SLX45T			-3, -3N, -2
XC6SLX75			-3, -3N, -2, -1L
XC6SLX75T			-3, -3N, -2
XC6SLX100			-3, -3N, -2, -1L
XC6SLX100T			-3, -3N, -2
XC6SLX150			-3, -3N, -2, -1L
XC6SLX150T			-3, -3N, -2
XA6SLX4			-3, -2
XA6SLX9			-3, -2
XA6SLX16			-3, -2
XA6SLX25			-3, -2
XA6SLX25T			-3, -2
XA6SLX45			-3, -2
XA6SLX45T			-3, -2
XA6SLX75			-3, -2
XA6SLX75T			-3, -2
XA6SLX100			-2
XQ6SLX75			-2, -1L
XQ6SLX75T			-3, -2
XQ6SLX150			-2, -1L
XQ6SLX150T			-3, -2

Notes:

1. The XC6SLX4 is not available in the -3N speed grade.

Testing of Switching Characteristics

All devices are 100% functionally tested. Internal timing parameters are derived from measuring internal test patterns. Listed below are representative values.

For more specific, more precise, and worst-case guaranteed data, use the values reported by the static timing analyzer and back-annotated to the simulation net list. Unless otherwise noted, values apply to all Spartan-6 devices.

Production Silicon and ISE Software Status

In some cases, a particular family member (and speed grade) is released to production before a speed specification is released with the correct label (Advance, Preliminary, Production). Any labeling discrepancies are corrected in subsequent speed specification releases. Table 27 lists the production released Spartan-6 family member, speed grade, and the minimum corresponding supported speed specification version and ISE® software revisions. The ISE software and speed specifications listed are the minimum releases required for production. All subsequent releases of software and speed specifications are valid.

Table 27: **Spartan-6 Device Production Software and Speed Specification Release(1)**

Device	Speed Grade Designations(2)			
	-3(3)	-3N	-2(4)	-1L
XC6SLX4	ISE 12.4 v1.15	N/A	ISE 12.3 v1.12(5)	ISE 13.2 v1.07
XC6SLX9	ISE 12.4 v1.15	ISE 13.1 Update v1.18(7)	ISE 12.3 v1.12(5)	ISE 13.2 v1.07
XC6SLX16	ISE 12.1 v1.08	ISE 13.1 Update v1.18(7)	ISE 11.5 v1.06	ISE 13.2 v1.07
XC6SLX25	ISE 12.2 v1.11(6)	ISE 13.1 Update v1.18(7)	ISE 12.2 v1.11(6)	ISE 13.2 v1.07
XC6SLX25T	ISE 12.2 v1.11(6)	ISE 13.1 Update v1.18(7)	ISE 12.2 v1.11(6)	N/A
XC6SLX45	ISE 12.1 v1.08	ISE 13.1 Update v1.18(7)	ISE 11.5 v1.07	ISE 13.1 v1.06
XC6SLX45T	ISE 12.1 v1.08	ISE 13.1 Update v1.18(7)	ISE 12.1 v1.08	N/A
XC6SLX75	ISE 12.2 v1.11(6)	ISE 13.1 Update v1.18(7)	ISE 12.2 v1.11(6)	ISE 13.2 v1.07
XC6SLX75T	ISE 12.2 v1.11(6)	ISE 13.1 Update v1.18(7)	ISE 12.2 v1.11(6)	N/A
XC6SLX100	ISE 12.2 v1.11(6)	ISE 13.1 Update v1.18(7)	ISE 12.2 v1.11(6)	ISE 13.1 v1.06
XC6SLX100T	ISE 12.2 v1.11(6)	ISE 13.1 Update v1.18(7)	ISE 12.2 v1.11(6)	N/A
XC6SLX150	ISE 12.2 v1.11(6)	ISE 13.1 Update v1.18(7)	ISE 12.2 v1.11(6)	ISE 13.1 v1.06
XC6SLX150T	ISE 12.2 v1.11(6)	ISE 13.1 Update v1.18(7)	ISE 12.2 v1.11(6)	N/A
XA6SLX4	ISE 13.2 v1.19	N/A	ISE 13.2 v1.19	N/A
XA6SLX9	ISE 13.2 v1.19	N/A	ISE 13.2 v1.19	N/A
XA6SLX16	ISE 13.2 v1.19	N/A	ISE 13.2 v1.19	N/A
XA6SLX25	ISE 13.2 v1.19	N/A	ISE 13.2 v1.19	N/A
XA6SLX25T	ISE 13.2 v1.19	N/A	ISE 13.2 v1.19	N/A
XA6SLX45	ISE 13.2 v1.19	N/A	ISE 13.2 v1.19	N/A
XA6SLX45T	ISE 13.2 v1.19	N/A	ISE 13.2 v1.19	N/A
XA6SLX75	ISE 13.2 v1.19	N/A	ISE 13.2 v1.19	N/A
XA6SLX75T	ISE 13.2 v1.19	N/A	ISE 13.2 v1.19	N/A
XA6SLX100	N/A	N/A	ISE 13.3 v1.20	N/A

Table 27: **Spartan-6 Device Production Software and Speed Specification Release[1] *(Cont'd)***

Device	Speed Grade Designations[2]			
	-3[3]	-3N	-2[4]	-1L
XQ6SLX75	N/A	N/A	ISE 13.2 v1.19	ISE 13.2 v1.07
XQ6SLX75T	ISE 13.2 v1.19	N/A	ISE 13.2 v1.19	N/A
XQ6SLX150	N/A	N/A	ISE 13.2 v1.19	ISE 13.2 v1.07
XQ6SLX150T	ISE 13.2 v1.19	N/A	ISE 13.2 v1.19	N/A

Notes:
1. ISE 13.3 software with v1.20 for -3, -3N, and -2; and v1.08 for -1L speed specification reflects the changes outlined in XCN11028: *Spartan-6 FPGA Speed File Changes*.
2. As marked with an N/A, LXT devices and all XA devices are not available with a -1L speed grade; LX4 devices and all XA and XQ devices are not available with a -3N speed grade.
3. Improved -3 specifications reflected in this data sheet require ISE 12.4 software with v1.15 speed specification.
4. Improved -2 specifications reflected in this data sheet require ISE 12.4 software and the *12.4 Speed Files Patch* which contains the v1.17 speed specification available on the Xilinx Download Center.
5. ISE 12.3 software with v1.12 speed specification is available using ISE 12.3 software and the *12.3 Speed Files Patch* available on the Xilinx Download Center.
6. ISE 12.2 software with v1.11 speed specification is available using ISE 12.2 software and the *12.2 Speed Files Patch* available on the Xilinx Download Center.
7. ISE 13.1 software with v1.18 speed specification is available using ISE 13.1 software and the *13.1 Update* available on the Xilinx Download Center. See XCN11012: *Speed File Change for -3N Devices*.

IOB Pad Input/Output/3-State Switching Characteristics

Table 28 (for commercial (XC) Spartan-6 devices) and Table 29 (for Automotive XA Spartan-6 and Defense-grade Spartan-6Q devices) summarizes the values of standard-specific data input delays, output delays terminating at pads (based on standard), and 3-state delays.

- T_{IOPI} is described as the delay from IOB pad through the input buffer to the I-pin of an IOB pad. The delay varies depending on the capability of the SelectIO input buffer.
- T_{IOOP} is described as the delay from the O pin to the IOB pad through the output buffer of an IOB pad. The delay varies depending on the capability of the SelectIO output buffer.
- T_{IOTP} is described as the delay from the T pin to the IOB pad through the output buffer of an IOB pad, when 3-state is disabled. The delay varies depending on the SelectIO capability of the output buffer.

See the TRACE report for further information on delays when using an I/O standard with UNTUNED termination on inputs or outputs.

Table 28: **IOB Switching Characteristics for the Commercial (XC) Spartan-6 Devices**

I/O Standard	T_{IOPI}				T_{IOOP}				T_{IOTP}				Units
	Speed Grade				Speed Grade				Speed Grade				
	-3	-3N	-2	-1L[1]	-3	-3N	-2	-1L[1]	-3	-3N	-2	-1L[1]	
LVDS_33	1.17	1.29	1.42	1.68	1.55	1.69	1.89	2.42	3000	3000	3000	3000	ns
LVDS_25	1.01	1.13	1.26	1.57	1.65	1.79	1.99	2.47	3000	3000	3000	3000	ns
BLVDS_25	1.02	1.14	1.27	1.57	1.72	1.86	2.06	2.68	1.72	1.86	2.06	2.68	ns
MINI_LVDS_33	1.17	1.29	1.42	1.68	1.57	1.71	1.91	2.41	3000	3000	3000	3000	ns
MINI_LVDS_25	1.01	1.13	1.26	1.57	1.65	1.79	1.99	2.47	3000	3000	3000	3000	ns
LVPECL_33	1.18	1.30	1.43	1.68	N/A	N/A	N/A	N/A	N/A	N/A	N/A	N/A	ns
LVPECL_25	1.02	1.14	1.27	1.57	N/A	N/A	N/A	N/A	N/A	N/A	N/A	N/A	ns
RSDS_33 (point to point)	1.17	1.29	1.42	1.68	1.57	1.71	1.91	2.42	3000	3000	3000	3000	ns
RSDS_25 (point to point)	1.01	1.13	1.26	1.56	1.65	1.79	1.99	2.47	3000	3000	3000	3000	ns
TMDS_33	1.21	1.33	1.46	1.71	1.54	1.68	1.88	2.50	3000	3000	3000	3000	ns

Table 28: **IOB Switching Characteristics for the Commercial (XC) Spartan-6 Devices *(Cont'd)***

I/O Standard	T_{IOPI}				T_{IOOP}				T_{IOTP}				Units
	Speed Grade				Speed Grade				Speed Grade				
	-3	-3N	-2	-1L[1]	-3	-3N	-2	-1L[1]	-3	-3N	-2	-1L[1]	
PPDS_33	1.17	1.29	1.42	1.68	1.57	1.71	1.91	2.43	3000	3000	3000	3000	ns
PPDS_25	1.01	1.13	1.26	1.56	1.68	1.82	2.02	2.47	3000	3000	3000	3000	ns
PCI33_3	1.07	1.19	1.32	1.57[2]	3.51	3.65	3.85	4.38[2]	3.51	3.65	3.85	4.38[1]	ns
PCI66_3	1.07	1.19	1.32	1.57[2]	3.53	3.67	3.87	4.39[2]	3.53	3.67	3.87	4.39[1]	ns
DISPLAY_PORT	1.02	1.14	1.27	1.56	3.15	3.29	3.49	4.08	3.15	3.29	3.49	4.08	ns
I2C	1.33	1.45	1.58	1.82	11.56	11.70	11.90	12.52	11.56	11.70	11.90	12.52	ns
SMBUS	1.33	1.45	1.58	1.82	11.56	11.70	11.90	12.52	11.56	11.70	11.90	12.52	ns
SDIO	1.36	1.48	1.61	1.84	2.64	2.78	2.98	3.60	2.64	2.78	2.98	3.60	ns
MOBILE_DDR	0.94	1.06	1.19	1.43	2.35	2.49	2.69	3.31	2.35	2.49	2.69	3.31	ns
HSTL_I	0.90	1.02	1.15	1.39	1.66	1.80	2.00	2.62	1.66	1.80	2.00	2.62	ns
HSTL_II	0.91	1.03	1.16	1.40	1.72	1.86	2.06	2.68	1.72	1.86	2.06	2.68	ns
HSTL_III	0.95	1.07	1.20	1.44	1.67	1.81	2.01	2.61	1.67	1.81	2.01	2.61	ns
HSTL_I _18	0.94	1.06	1.19	1.43	1.77	1.91	2.11	2.73	1.77	1.91	2.11	2.73	ns
HSTL_II _18	0.94	1.06	1.19	1.43	1.85	1.99	2.19	2.81	1.85	1.99	2.19	2.81	ns
HSTL_III _18	0.99	1.11	1.24	1.47	1.79	1.93	2.13	2.72	1.79	1.93	2.13	2.72	ns
SSTL3_I	1.58	1.70	1.83	2.16	1.83	1.97	2.17	2.72	1.83	1.97	2.17	2.72	ns
SSTL3_II	1.58	1.70	1.83	2.16	2.01	2.15	2.35	2.94	2.01	2.15	2.35	2.94	ns
SSTL2_I	1.30	1.42	1.55	1.87	1.77	1.91	2.11	2.69	1.77	1.91	2.11	2.69	ns
SSTL2_II	1.30	1.42	1.55	1.88	1.86	2.00	2.20	2.82	1.86	2.00	2.20	2.82	ns
SSTL18_I	0.92	1.04	1.17	1.41	1.63	1.77	1.97	2.59	1.63	1.77	1.97	2.59	ns
SSTL18_II	0.92	1.04	1.17	1.41	1.66	1.80	2.00	2.62	1.66	1.80	2.00	2.62	ns
SSTL15_II	0.92	1.04	1.17	1.41	1.67	1.81	2.01	2.63	1.67	1.81	2.01	2.63	ns
DIFF_HSTL_I	0.94	1.06	1.19	1.46	1.77	1.91	2.11	2.62	1.77	1.91	2.11	2.62	ns
DIFF_HSTL_II	0.93	1.05	1.18	1.45	1.72	1.86	2.06	2.54	1.72	1.86	2.06	2.54	ns
DIFF_HSTL_III	0.93	1.05	1.18	1.46	1.69	1.83	2.03	2.53	1.69	1.83	2.03	2.53	ns
DIFF_HSTL_I_18	0.97	1.09	1.22	1.50	1.79	1.93	2.13	2.63	1.79	1.93	2.13	2.63	ns
DIFF_HSTL_II_18	0.97	1.09	1.22	1.49	1.69	1.83	2.03	2.51	1.69	1.83	2.03	2.51	ns
DIFF_HSTL_III_18	0.97	1.09	1.22	1.50	1.69	1.83	2.03	2.53	1.69	1.83	2.03	2.53	ns
DIFF_SSTL3_I	1.18	1.30	1.43	1.68	1.81	1.95	2.15	2.64	1.81	1.95	2.15	2.64	ns
DIFF_SSTL3_II	1.19	1.31	1.44	1.68	1.80	1.94	2.14	2.63	1.80	1.94	2.14	2.63	ns
DIFF_SSTL2_I	1.02	1.14	1.27	1.57	1.80	1.94	2.14	2.62	1.80	1.94	2.14	2.62	ns
DIFF_SSTL2_II	1.02	1.14	1.27	1.57	1.76	1.90	2.10	2.57	1.76	1.90	2.10	2.57	ns
DIFF_SSTL18_I	0.97	1.09	1.22	1.51	1.72	1.86	2.06	2.56	1.72	1.86	2.06	2.56	ns
DIFF_SSTL18_II	0.98	1.10	1.23	1.50	1.68	1.82	2.02	2.52	1.68	1.82	2.02	2.52	ns
DIFF_SSTL15_II	0.94	1.06	1.19	1.46	1.67	1.81	2.01	2.50	1.67	1.81	2.01	2.50	ns
DIFF_MOBILE_DDR	0.97	1.09	1.22	1.51	1.75	1.89	2.09	2.57	1.75	1.89	2.09	2.57	ns

Table 28: **IOB Switching Characteristics for the Commercial (XC) Spartan-6 Devices *(Cont'd)***

I/O Standard	T_{IOPI}				T_{IOOP}				T_{IOTP}				Units
	Speed Grade				Speed Grade				Speed Grade				
	-3	-3N	-2	-1L[1]	-3	-3N	-2	-1L[1]	-3	-3N	-2	-1L[1]	
LVTTL, QUIETIO, 2 mA	1.35	1.47	1.60	1.82	5.39	5.53	5.73	6.37	5.39	5.53	5.73	6.37	ns
LVTTL, QUIETIO, 4 mA	1.35	1.47	1.60	1.82	4.29	4.43	4.63	5.22	4.29	4.43	4.63	5.22	ns
LVTTL, QUIETIO, 6 mA	1.35	1.47	1.60	1.82	3.75	3.89	4.09	4.69	3.75	3.89	4.09	4.69	ns
LVTTL, QUIETIO, 8 mA	1.35	1.47	1.60	1.82	3.23	3.37	3.57	4.20	3.23	3.37	3.57	4.20	ns
LVTTL, QUIETIO, 12 mA	1.35	1.47	1.60	1.82	3.28	3.42	3.62	4.22	3.28	3.42	3.62	4.22	ns
LVTTL, QUIETIO, 16 mA	1.35	1.47	1.60	1.82	2.94	3.08	3.28	3.92	2.94	3.08	3.28	3.92	ns
LVTTL, QUIETIO, 24 mA	1.35	1.47	1.60	1.82	2.69	2.83	3.03	3.67	2.69	2.83	3.03	3.67	ns
LVTTL, Slow, 2 mA	1.35	1.47	1.60	1.82	4.36	4.50	4.70	5.30	4.36	4.50	4.70	5.30	ns
LVTTL, Slow, 4 mA	1.35	1.47	1.60	1.82	3.17	3.31	3.51	4.16	3.17	3.31	3.51	4.16	ns
LVTTL, Slow, 6 mA	1.35	1.47	1.60	1.82	2.76	2.90	3.10	3.75	2.76	2.90	3.10	3.75	ns
LVTTL, Slow, 8 mA	1.35	1.47	1.60	1.82	2.59	2.73	2.93	3.55	2.59	2.73	2.93	3.55	ns
LVTTL, Slow, 12 mA	1.35	1.47	1.60	1.82	2.58	2.72	2.92	3.54	2.58	2.72	2.92	3.54	ns
LVTTL, Slow, 16 mA	1.35	1.47	1.60	1.82	2.39	2.53	2.73	3.40	2.39	2.53	2.73	3.40	ns
LVTTL, Slow, 24 mA	1.35	1.47	1.60	1.82	2.28	2.42	2.62	3.24	2.28	2.42	2.62	3.24	ns
LVTTL, Fast, 2 mA	1.35	1.47	1.60	1.82	3.78	3.92	4.12	4.74	3.78	3.92	4.12	4.74	ns
LVTTL, Fast, 4 mA	1.35	1.47	1.60	1.82	2.49	2.63	2.83	3.45	2.49	2.63	2.83	3.45	ns
LVTTL, Fast, 6 mA	1.35	1.47	1.60	1.82	2.44	2.58	2.78	3.40	2.44	2.58	2.78	3.40	ns
LVTTL, Fast, 8 mA	1.35	1.47	1.60	1.82	2.32	2.46	2.66	3.28	2.32	2.46	2.66	3.28	ns
LVTTL, Fast, 12 mA	1.35	1.47	1.60	1.82	1.83	1.97	2.17	2.79	1.83	1.97	2.17	2.79	ns
LVTTL, Fast, 16 mA	1.35	1.47	1.60	1.82	1.83	1.97	2.17	2.79	1.83	1.97	2.17	2.79	ns
LVTTL, Fast, 24 mA	1.35	1.47	1.60	1.82	1.83	1.97	2.17	2.79	1.83	1.97	2.17	2.79	ns
LVCMOS33, QUIETIO, 2 mA	1.34	1.46	1.59	1.82	5.40	5.54	5.74	6.37	5.40	5.54	5.74	6.37	ns
LVCMOS33, QUIETIO, 4 mA	1.34	1.46	1.59	1.82	4.03	4.17	4.37	5.01	4.03	4.17	4.37	5.01	ns
LVCMOS33, QUIETIO, 6 mA	1.34	1.46	1.59	1.82	3.51	3.65	3.85	4.47	3.51	3.65	3.85	4.47	ns
LVCMOS33, QUIETIO, 8 mA	1.34	1.46	1.59	1.82	3.37	3.51	3.71	4.33	3.37	3.51	3.71	4.33	ns
LVCMOS33, QUIETIO, 12 mA	1.34	1.46	1.59	1.82	2.94	3.08	3.28	3.93	2.94	3.08	3.28	3.93	ns
LVCMOS33, QUIETIO, 16 mA	1.34	1.46	1.59	1.82	2.77	2.91	3.11	3.78	2.77	2.91	3.11	3.78	ns
LVCMOS33, QUIETIO, 24 mA	1.34	1.46	1.59	1.82	2.59	2.73	2.93	3.58	2.59	2.73	2.93	3.58	ns
LVCMOS33, Slow, 2 mA	1.34	1.46	1.59	1.82	4.37	4.51	4.71	5.28	4.37	4.51	4.71	5.28	ns
LVCMOS33, Slow, 4 mA	1.34	1.46	1.59	1.82	2.98	3.12	3.32	3.94	2.98	3.12	3.32	3.94	ns
LVCMOS33, Slow, 6 mA	1.34	1.46	1.59	1.82	2.58	2.72	2.92	3.61	2.58	2.72	2.92	3.61	ns
LVCMOS33, Slow, 8 mA	1.34	1.46	1.59	1.82	2.65	2.79	2.99	3.61	2.65	2.79	2.99	3.61	ns
LVCMOS33, Slow, 12 mA	1.34	1.46	1.59	1.82	2.39	2.53	2.73	3.31	2.39	2.53	2.73	3.31	ns
LVCMOS33, Slow, 16 mA	1.34	1.46	1.59	1.82	2.31	2.45	2.65	3.27	2.31	2.45	2.65	3.27	ns
LVCMOS33, Slow, 24 mA	1.34	1.46	1.59	1.82	2.28	2.42	2.62	3.24	2.28	2.42	2.62	3.24	ns
LVCMOS33, Fast, 2 mA	1.34	1.46	1.59	1.82	3.76	3.90	4.10	4.70	3.76	3.90	4.10	4.70	ns
LVCMOS33, Fast, 4 mA	1.34	1.46	1.59	1.82	2.48	2.62	2.82	3.44	2.48	2.62	2.82	3.44	ns
LVCMOS33, Fast, 6 mA	1.34	1.46	1.59	1.82	2.32	2.46	2.66	3.28	2.32	2.46	2.66	3.28	ns

Table 28: **IOB Switching Characteristics for the Commercial (XC) Spartan-6 Devices *(Cont'd)***

I/O Standard	T_{IOPI}				T_{IOOP}				T_{IOTP}				Units
	Speed Grade				Speed Grade				Speed Grade				
	-3	-3N	-2	-1L[1]	-3	-3N	-2	-1L[1]	-3	-3N	-2	-1L[1]	
LVCMOS33, Fast, 8 mA	1.34	1.46	1.59	1.82	2.07	2.21	2.41	3.03	2.07	2.21	2.41	3.03	ns
LVCMOS33, Fast, 12 mA	1.34	1.46	1.59	1.82	1.65	1.79	1.99	2.62	1.65	1.79	1.99	2.62	ns
LVCMOS33, Fast, 16 mA	1.34	1.46	1.59	1.82	1.65	1.79	1.99	2.62	1.65	1.79	1.99	2.62	ns
LVCMOS33, Fast, 24 mA	1.34	1.46	1.59	1.82	1.65	1.79	1.99	2.62	1.65	1.79	1.99	2.62	ns
LVCMOS25, QUIETIO, 2 mA	0.82	0.94	1.07	1.31	4.81	4.95	5.15	5.79	4.81	4.95	5.15	5.79	ns
LVCMOS25, QUIETIO, 4 mA	0.82	0.94	1.07	1.31	3.70	3.84	4.04	4.66	3.70	3.84	4.04	4.66	ns
LVCMOS25, QUIETIO, 6 mA	0.82	0.94	1.07	1.31	3.46	3.60	3.80	4.38	3.46	3.60	3.80	4.38	ns
LVCMOS25, QUIETIO, 8 mA	0.82	0.94	1.07	1.31	3.20	3.34	3.54	4.12	3.20	3.34	3.54	4.12	ns
LVCMOS25, QUIETIO, 12 mA	0.82	0.94	1.07	1.31	2.83	2.97	3.17	3.75	2.83	2.97	3.17	3.75	ns
LVCMOS25, QUIETIO, 16 mA	0.82	0.94	1.07	1.31	2.64	2.78	2.98	3.64	2.64	2.78	2.98	3.64	ns
LVCMOS25, QUIETIO, 24 mA	0.82	0.94	1.07	1.31	2.45	2.59	2.79	3.42	2.45	2.59	2.79	3.42	ns
LVCMOS25, Slow, 2 mA	0.82	0.94	1.07	1.31	3.78	3.92	4.12	4.76	3.78	3.92	4.12	4.76	ns
LVCMOS25, Slow, 4 mA	0.82	0.94	1.07	1.31	2.79	2.93	3.13	3.73	2.79	2.93	3.13	3.73	ns
LVCMOS25, Slow, 6 mA	0.82	0.94	1.07	1.31	2.73	2.87	3.07	3.66	2.73	2.87	3.07	3.66	ns
LVCMOS25, Slow, 8 mA	0.82	0.94	1.07	1.31	2.48	2.62	2.82	3.42	2.48	2.62	2.82	3.42	ns
LVCMOS25, Slow, 12 mA	0.82	0.94	1.07	1.31	2.01	2.15	2.35	2.95	2.01	2.15	2.35	2.95	ns
LVCMOS25, Slow, 16 mA	0.82	0.94	1.07	1.31	2.01	2.15	2.35	2.95	2.01	2.15	2.35	2.95	ns
LVCMOS25, Slow, 24 mA	0.82	0.94	1.07	1.31	2.01	2.15	2.35	2.94	2.01	2.15	2.35	2.94	ns
LVCMOS25, Fast, 2 mA	0.82	0.94	1.07	1.31	3.35	3.49	3.69	4.31	3.35	3.49	3.69	4.31	ns
LVCMOS25, Fast, 4 mA	0.82	0.94	1.07	1.31	2.25	2.39	2.59	3.22	2.25	2.39	2.59	3.22	ns
LVCMOS25, Fast, 6 mA	0.82	0.94	1.07	1.31	2.09	2.23	2.43	3.05	2.09	2.23	2.43	3.05	ns
LVCMOS25, Fast, 8 mA	0.82	0.94	1.07	1.31	2.02	2.16	2.36	2.98	2.02	2.16	2.36	2.98	ns
LVCMOS25, Fast, 12 mA	0.82	0.94	1.07	1.31	1.56	1.70	1.90	2.52	1.56	1.70	1.90	2.52	ns
LVCMOS25, Fast, 16 mA	0.82	0.94	1.07	1.31	1.56	1.70	1.90	2.52	1.56	1.70	1.90	2.52	ns
LVCMOS25, Fast, 24 mA	0.82	0.94	1.07	1.31	1.56	1.70	1.90	2.52	1.56	1.70	1.90	2.52	ns
LVCMOS18, QUIETIO, 2 mA	1.18	1.30	1.43	2.04	5.92	6.06	6.26	6.80	5.92	6.06	6.26	6.80	ns
LVCMOS18, QUIETIO, 4 mA	1.18	1.30	1.43	2.04	4.74	4.88	5.08	5.63	4.74	4.88	5.08	5.63	ns
LVCMOS18, QUIETIO, 6 mA	1.18	1.30	1.43	2.04	4.05	4.19	4.39	4.96	4.05	4.19	4.39	4.96	ns
LVCMOS18, QUIETIO, 8 mA	1.18	1.30	1.43	2.04	3.71	3.85	4.05	4.63	3.71	3.85	4.05	4.63	ns
LVCMOS18, QUIETIO, 12 mA	1.18	1.30	1.43	2.04	3.35	3.49	3.69	4.27	3.35	3.49	3.69	4.27	ns
LVCMOS18, QUIETIO, 16 mA	1.18	1.30	1.43	2.04	3.20	3.34	3.54	4.14	3.20	3.34	3.54	4.14	ns
LVCMOS18, QUIETIO, 24 mA	1.18	1.30	1.43	2.04	2.96	3.10	3.30	3.98	2.96	3.10	3.30	3.98	ns
LVCMOS18, Slow, 2 mA	1.18	1.30	1.43	2.04	4.62	4.76	4.96	5.54	4.62	4.76	4.96	5.54	ns
LVCMOS18, Slow, 4 mA	1.18	1.30	1.43	2.04	3.69	3.83	4.03	4.60	3.69	3.83	4.03	4.60	ns
LVCMOS18, Slow, 6 mA	1.18	1.30	1.43	2.04	3.00	3.14	3.34	3.94	3.00	3.14	3.34	3.94	ns
LVCMOS18, Slow, 8 mA	1.18	1.30	1.43	2.04	2.19	2.33	2.53	3.17	2.19	2.33	2.53	3.17	ns
LVCMOS18, Slow, 12 mA	1.18	1.30	1.43	2.04	1.99	2.13	2.33	2.95	1.99	2.13	2.33	2.95	ns
LVCMOS18, Slow, 16 mA	1.18	1.30	1.43	2.04	1.99	2.13	2.33	2.95	1.99	2.13	2.33	2.95	ns

Table 28: **IOB Switching Characteristics for the Commercial (XC) Spartan-6 Devices *(Cont'd)***

I/O Standard	T_{IOPI}				T_{IOOP}				T_{IOTP}				Units
	Speed Grade				Speed Grade				Speed Grade				
	-3	-3N	-2	-1L[1]	-3	-3N	-2	-1L[1]	-3	-3N	-2	-1L[1]	
LVCMOS18, Slow, 24 mA	1.18	1.30	1.43	2.04	1.99	2.13	2.33	2.95	1.99	2.13	2.33	2.95	ns
LVCMOS18, Fast, 2 mA	1.18	1.30	1.43	2.04	3.59	3.73	3.93	4.53	3.59	3.73	3.93	4.53	ns
LVCMOS18, Fast, 4 mA	1.18	1.30	1.43	2.04	2.39	2.53	2.73	3.35	2.39	2.53	2.73	3.35	ns
LVCMOS18, Fast, 6 mA	1.18	1.30	1.43	2.04	1.88	2.02	2.22	2.84	1.88	2.02	2.22	2.84	ns
LVCMOS18, Fast, 8 mA	1.18	1.30	1.43	2.04	1.81	1.95	2.15	2.77	1.81	1.95	2.15	2.77	ns
LVCMOS18, Fast, 12 mA	1.18	1.30	1.43	2.04	1.71	1.85	2.05	2.67	1.71	1.85	2.05	2.67	ns
LVCMOS18, Fast, 16 mA	1.18	1.30	1.43	2.04	1.71	1.85	2.05	2.67	1.71	1.85	2.05	2.67	ns
LVCMOS18, Fast, 24 mA	1.18	1.30	1.43	2.04	1.71	1.85	2.05	2.67	1.71	1.85	2.05	2.67	ns
LVCMOS18_JEDEC, QUIETIO, 2 mA	0.94	1.06	1.19	1.41	5.91	6.05	6.25	6.79	5.91	6.05	6.25	6.79	ns
LVCMOS18_JEDEC, QUIETIO, 4 mA	0.94	1.06	1.19	1.41	4.75	4.89	5.09	5.64	4.75	4.89	5.09	5.64	ns
LVCMOS18_JEDEC, QUIETIO, 6 mA	0.94	1.06	1.19	1.41	4.04	4.18	4.38	4.96	4.04	4.18	4.38	4.96	ns
LVCMOS18_JEDEC, QUIETIO, 8 mA	0.94	1.06	1.19	1.41	3.71	3.85	4.05	4.62	3.71	3.85	4.05	4.62	ns
LVCMOS18_JEDEC, QUIETIO, 12 mA	0.94	1.06	1.19	1.41	3.35	3.49	3.69	4.28	3.35	3.49	3.69	4.28	ns
LVCMOS18_JEDEC, QUIETIO, 16 mA	0.94	1.06	1.19	1.41	3.20	3.34	3.54	4.13	3.20	3.34	3.54	4.13	ns
LVCMOS18_JEDEC, QUIETIO, 24 mA	0.94	1.06	1.19	1.41	2.96	3.10	3.30	3.98	2.96	3.10	3.30	3.98	ns
LVCMOS18_JEDEC, Slow, 2 mA	0.94	1.06	1.19	1.41	4.59	4.73	4.93	5.54	4.59	4.73	4.93	5.54	ns
LVCMOS18_JEDEC, Slow, 4 mA	0.94	1.06	1.19	1.41	3.69	3.83	4.03	4.60	3.69	3.83	4.03	4.60	ns
LVCMOS18_JEDEC, Slow, 6 mA	0.94	1.06	1.19	1.41	3.00	3.14	3.34	3.94	3.00	3.14	3.34	3.94	ns
LVCMOS18_JEDEC, Slow, 8 mA	0.94	1.06	1.19	1.41	2.19	2.33	2.53	3.18	2.19	2.33	2.53	3.18	ns
LVCMOS18_JEDEC, Slow, 12 mA	0.94	1.06	1.19	1.41	1.99	2.13	2.33	2.95	1.99	2.13	2.33	2.95	ns
LVCMOS18_JEDEC, Slow, 16 mA	0.94	1.06	1.19	1.41	1.99	2.13	2.33	2.95	1.99	2.13	2.33	2.95	ns
LVCMOS18_JEDEC, Slow, 24 mA	0.94	1.06	1.19	1.41	1.99	2.13	2.33	2.95	1.99	2.13	2.33	2.95	ns
LVCMOS18_JEDEC, Fast, 2 mA	0.94	1.06	1.19	1.41	3.57	3.71	3.91	4.52	3.57	3.71	3.91	4.52	ns
LVCMOS18_JEDEC, Fast, 4 mA	0.94	1.06	1.19	1.41	2.39	2.53	2.73	3.35	2.39	2.53	2.73	3.35	ns
LVCMOS18_JEDEC, Fast, 6 mA	0.94	1.06	1.19	1.41	1.88	2.02	2.22	2.84	1.88	2.02	2.22	2.84	ns
LVCMOS18_JEDEC, Fast, 8 mA	0.94	1.06	1.19	1.41	1.80	1.94	2.14	2.76	1.80	1.94	2.14	2.76	ns
LVCMOS18_JEDEC, Fast, 12 mA	0.94	1.06	1.19	1.41	1.72	1.86	2.06	2.68	1.72	1.86	2.06	2.68	ns
LVCMOS18_JEDEC, Fast, 16 mA	0.94	1.06	1.19	1.41	1.72	1.86	2.06	2.68	1.72	1.86	2.06	2.68	ns
LVCMOS18_JEDEC, Fast, 24 mA	0.94	1.06	1.19	1.41	1.72	1.86	2.06	2.68	1.72	1.86	2.06	2.68	ns
LVCMOS15, QUIETIO, 2 mA	0.98	1.10	1.23	1.79	5.47	5.61	5.81	6.38	5.47	5.61	5.81	6.38	ns
LVCMOS15, QUIETIO, 4 mA	0.98	1.10	1.23	1.79	4.61	4.75	4.95	5.51	4.61	4.75	4.95	5.51	ns
LVCMOS15, QUIETIO, 6 mA	0.98	1.10	1.23	1.79	4.07	4.21	4.41	4.97	4.07	4.21	4.41	4.97	ns
LVCMOS15, QUIETIO, 8 mA	0.98	1.10	1.23	1.79	3.91	4.05	4.25	4.81	3.91	4.05	4.25	4.81	ns
LVCMOS15, QUIETIO, 12 mA	0.98	1.10	1.23	1.79	3.53	3.67	3.87	4.51	3.53	3.67	3.87	4.51	ns
LVCMOS15, QUIETIO, 16 mA	0.98	1.10	1.23	1.79	3.32	3.46	3.66	4.31	3.32	3.46	3.66	4.31	ns
LVCMOS15, Slow, 2 mA	0.98	1.10	1.23	1.79	4.18	4.32	4.52	5.11	4.18	4.32	4.52	5.11	ns
LVCMOS15, Slow, 4 mA	0.98	1.10	1.23	1.79	3.42	3.56	3.76	4.34	3.42	3.56	3.76	4.34	ns
LVCMOS15, Slow, 6 mA	0.98	1.10	1.23	1.79	2.29	2.43	2.63	3.24	2.29	2.43	2.63	3.24	ns

Table 28: **IOB Switching Characteristics for the Commercial (XC) Spartan-6 Devices *(Cont'd)***

I/O Standard	T_{IOPI}				T_{IOOP}				T_{IOTP}				Units
	Speed Grade				Speed Grade				Speed Grade				
	-3	-3N	-2	-1L[1]	-3	-3N	-2	-1L[1]	-3	-3N	-2	-1L[1]	
LVCMOS15, Slow, 8 mA	0.98	1.10	1.23	1.79	2.30	2.44	2.64	3.25	2.30	2.44	2.64	3.25	ns
LVCMOS15, Slow, 12 mA	0.98	1.10	1.23	1.79	2.03	2.17	2.37	2.99	2.03	2.17	2.37	2.99	ns
LVCMOS15, Slow, 16 mA	0.98	1.10	1.23	1.79	2.01	2.15	2.35	2.97	2.01	2.15	2.35	2.97	ns
LVCMOS15, Fast, 2 mA	0.98	1.10	1.23	1.79	3.29	3.43	3.63	4.24	3.29	3.43	3.63	4.24	ns
LVCMOS15, Fast, 4 mA	0.98	1.10	1.23	1.79	2.27	2.41	2.61	3.22	2.27	2.41	2.61	3.22	ns
LVCMOS15, Fast, 6 mA	0.98	1.10	1.23	1.79	1.78	1.92	2.12	2.74	1.78	1.92	2.12	2.74	ns
LVCMOS15, Fast, 8 mA	0.98	1.10	1.23	1.79	1.73	1.87	2.07	2.69	1.73	1.87	2.07	2.69	ns
LVCMOS15, Fast, 12 mA	0.98	1.10	1.23	1.79	1.73	1.87	2.07	2.64	1.73	1.87	2.07	2.64	ns
LVCMOS15, Fast, 16 mA	0.98	1.10	1.23	1.79	1.73	1.87	2.07	2.64	1.73	1.87	2.07	2.64	ns
LVCMOS15_JEDEC, QUIETIO, 2 mA	1.03	1.15	1.28	1.49	5.49	5.63	5.83	6.37	5.49	5.63	5.83	6.37	ns
LVCMOS15_JEDEC, QUIETIO, 4 mA	1.03	1.15	1.28	1.49	4.61	4.75	4.95	5.51	4.61	4.75	4.95	5.51	ns
LVCMOS15_JEDEC, QUIETIO, 6 mA	1.03	1.15	1.28	1.49	4.07	4.21	4.41	4.97	4.07	4.21	4.41	4.97	ns
LVCMOS15_JEDEC, QUIETIO, 8 mA	1.03	1.15	1.28	1.49	3.92	4.06	4.26	4.81	3.92	4.06	4.26	4.81	ns
LVCMOS15_JEDEC, QUIETIO, 12 mA	1.03	1.15	1.28	1.49	3.54	3.68	3.88	4.51	3.54	3.68	3.88	4.51	ns
LVCMOS15_JEDEC, QUIETIO, 16 mA	1.03	1.15	1.28	1.49	3.33	3.47	3.67	4.31	3.33	3.47	3.67	4.31	ns
LVCMOS15_JEDEC, Slow, 2 mA	1.03	1.15	1.28	1.49	4.18	4.32	4.52	5.13	4.18	4.32	4.52	5.13	ns
LVCMOS15_JEDEC, Slow, 4 mA	1.03	1.15	1.28	1.49	3.42	3.56	3.76	4.35	3.42	3.56	3.76	4.35	ns
LVCMOS15_JEDEC, Slow, 6 mA	1.03	1.15	1.28	1.49	2.29	2.43	2.63	3.25	2.29	2.43	2.63	3.25	ns
LVCMOS15_JEDEC, Slow, 8 mA	1.03	1.15	1.28	1.49	2.30	2.44	2.64	3.26	2.30	2.44	2.64	3.26	ns
LVCMOS15_JEDEC, Slow, 12 mA	1.03	1.15	1.28	1.49	2.01	2.15	2.35	2.97	2.01	2.15	2.35	2.97	ns
LVCMOS15_JEDEC, Slow, 16 mA	1.03	1.15	1.28	1.49	2.01	2.15	2.35	2.97	2.01	2.15	2.35	2.97	ns
LVCMOS15_JEDEC, Fast, 2 mA	1.03	1.15	1.28	1.49	3.28	3.42	3.62	4.22	3.28	3.42	3.62	4.22	ns
LVCMOS15_JEDEC, Fast, 4 mA	1.03	1.15	1.28	1.49	2.27	2.41	2.61	3.23	2.27	2.41	2.61	3.23	ns
LVCMOS15_JEDEC, Fast, 6 mA	1.03	1.15	1.28	1.49	1.78	1.92	2.12	2.74	1.78	1.92	2.12	2.74	ns
LVCMOS15_JEDEC, Fast, 8 mA	1.03	1.15	1.28	1.49	1.73	1.87	2.07	2.69	1.73	1.87	2.07	2.69	ns
LVCMOS15_JEDEC, Fast, 12 mA	1.03	1.15	1.28	1.49	1.73	1.87	2.07	2.63	1.73	1.87	2.07	2.63	ns
LVCMOS15_JEDEC, Fast, 16 mA	1.03	1.15	1.28	1.49	1.73	1.87	2.07	2.63	1.73	1.87	2.07	2.63	ns
LVCMOS12, QUIETIO, 2 mA	0.91	1.03	1.16	1.51	6.40	6.54	6.74	7.30	6.40	6.54	6.74	7.30	ns
LVCMOS12, QUIETIO, 4 mA	0.91	1.03	1.16	1.51	4.98	5.12	5.32	5.90	4.98	5.12	5.32	5.90	ns
LVCMOS12, QUIETIO, 6 mA	0.91	1.03	1.16	1.51	4.65	4.79	4.99	5.55	4.65	4.79	4.99	5.55	ns
LVCMOS12, QUIETIO, 8 mA	0.91	1.03	1.16	1.51	4.23	4.37	4.57	5.21	4.23	4.37	4.57	5.21	ns
LVCMOS12, QUIETIO, 12 mA	0.91	1.03	1.16	1.51	3.98	4.12	4.32	4.94	3.98	4.12	4.32	4.94	ns
LVCMOS12, Slow, 2 mA	0.91	1.03	1.16	1.51	4.98	5.12	5.32	5.91	4.98	5.12	5.32	5.91	ns
LVCMOS12, Slow, 4 mA	0.91	1.03	1.16	1.51	2.84	2.98	3.18	3.81	2.84	2.98	3.18	3.81	ns
LVCMOS12, Slow, 6 mA	0.91	1.03	1.16	1.51	2.77	2.91	3.11	3.72	2.77	2.91	3.11	3.72	ns
LVCMOS12, Slow, 8 mA	0.91	1.03	1.16	1.51	2.34	2.48	2.68	3.31	2.34	2.48	2.68	3.31	ns
LVCMOS12, Slow, 12 mA	0.91	1.03	1.16	1.51	2.08	2.22	2.42	3.06	2.08	2.22	2.42	3.06	ns

Table 28: **IOB Switching Characteristics for the Commercial (XC) Spartan-6 Devices *(Cont'd)***

I/O Standard	T_{IOPI}				T_{IOOP}				T_{IOTP}				Units
	Speed Grade				Speed Grade				Speed Grade				
	-3	-3N	-2	-1L[1]	-3	-3N	-2	-1L[1]	-3	-3N	-2	-1L[1]	
LVCMOS12, Fast, 2 mA	0.91	1.03	1.16	1.51	3.46	3.60	3.80	4.44	3.46	3.60	3.80	4.44	ns
LVCMOS12, Fast, 4 mA	0.91	1.03	1.16	1.51	2.35	2.49	2.69	3.30	2.35	2.49	2.69	3.30	ns
LVCMOS12, Fast, 6 mA	0.91	1.03	1.16	1.51	1.79	1.93	2.13	2.75	1.79	1.93	2.13	2.75	ns
LVCMOS12, Fast, 8 mA	0.91	1.03	1.16	1.51	1.68	1.82	2.02	2.64	1.68	1.82	2.02	2.64	ns
LVCMOS12, Fast, 12 mA	0.91	1.03	1.16	1.51	1.66	1.80	2.00	2.62	1.66	1.80	2.00	2.62	ns
LVCMOS12_JEDEC, QUIETIO, 2 mA	1.50	1.62	1.75	1.88	6.39	6.53	6.73	7.31	6.39	6.53	6.73	7.31	ns
LVCMOS12_JEDEC, QUIETIO, 4 mA	1.50	1.62	1.75	1.88	4.98	5.12	5.32	5.88	4.98	5.12	5.32	5.88	ns
LVCMOS12_JEDEC, QUIETIO, 6 mA	1.50	1.62	1.75	1.88	4.67	4.81	5.01	5.54	4.67	4.81	5.01	5.54	ns
LVCMOS12_JEDEC, QUIETIO, 8 mA	1.50	1.62	1.75	1.88	4.23	4.37	4.57	5.22	4.23	4.37	4.57	5.22	ns
LVCMOS12_JEDEC, QUIETIO, 12 mA	1.50	1.62	1.75	1.88	3.99	4.13	4.33	4.94	3.99	4.13	4.33	4.94	ns
LVCMOS12_JEDEC, Slow, 2 mA	1.50	1.62	1.75	1.88	5.00	5.14	5.34	5.90	5.00	5.14	5.34	5.90	ns
LVCMOS12_JEDEC, Slow, 4 mA	1.50	1.62	1.75	1.88	2.85	2.99	3.19	3.80	2.85	2.99	3.19	3.80	ns
LVCMOS12_JEDEC, Slow, 6 mA	1.50	1.62	1.75	1.88	2.76	2.90	3.10	3.72	2.76	2.90	3.10	3.72	ns
LVCMOS12_JEDEC, Slow, 8 mA	1.50	1.62	1.75	1.88	2.35	2.49	2.69	3.30	2.35	2.49	2.69	3.30	ns
LVCMOS12_JEDEC, Slow, 12 mA	1.50	1.62	1.75	1.88	2.09	2.23	2.43	3.05	2.09	2.23	2.43	3.05	ns
LVCMOS12_JEDEC, Fast, 2 mA	1.50	1.62	1.75	1.88	3.46	3.60	3.80	4.42	3.46	3.60	3.80	4.42	ns
LVCMOS12_JEDEC, Fast, 4 mA	1.50	1.62	1.75	1.88	2.35	2.49	2.69	3.31	2.35	2.49	2.69	3.31	ns
LVCMOS12_JEDEC, Fast, 6 mA	1.50	1.62	1.75	1.88	1.79	1.93	2.13	2.76	1.79	1.93	2.13	2.76	ns
LVCMOS12_JEDEC, Fast, 8 mA	1.50	1.62	1.75	1.88	1.69	1.83	2.03	2.65	1.69	1.83	2.03	2.65	ns
LVCMOS12_JEDEC, Fast, 12 mA	1.50	1.62	1.75	1.88	1.66	1.80	2.00	2.62	1.66	1.80	2.00	2.62	ns

Notes:

1. The -1L values listed in this table are also applicable to the Spartan-6Q devices.
2. Devices with a -1L speed grade do not support Xilinx PCI IP.

Table 29: **IOB Switching Characteristics for the Automotive XA Spartan-6 and the Spartan-6Q Devices[(1)]**

I/O Standard	T_{IOPI}		T_{IOOP}		T_{IOTP}		Units
	Speed Grade		Speed Grade		Speed Grade		
	-3	-2	-3	-2	-3	-2	
LVDS_33	1.24	1.42	1.69	1.89	3000	3000	ns
LVDS_25	1.08	1.26	1.79	1.99	3000	3000	ns
BLVDS_25	1.09	1.27	1.86	2.06	1.86	2.06	ns
MINI_LVDS_33	1.25	1.43	1.71	1.91	3000	3000	ns
MINI_LVDS_25	1.08	1.26	1.79	1.99	3000	3000	ns
LVPECL_33	1.25	1.43	N/A	N/A	N/A	N/A	ns
LVPECL_25	1.09	1.27	N/A	N/A	N/A	N/A	ns
RSDS_33 (point to point)	1.24	1.42	1.71	1.91	3000	3000	ns
RSDS_25 (point to point)	1.08	1.26	1.79	1.99	3000	3000	ns
TMDS_33	1.29	1.47	1.68	1.88	3000	3000	ns
PPDS_33	1.25	1.43	1.71	1.91	3000	3000	ns
PPDS_25	1.08	1.26	1.82	2.02	3000	3000	ns
PCI33_3	1.14	1.32	3.81	4.01	3.81	4.01	ns
PCI66_3	1.14	1.32	3.81	4.01	3.81	4.01	ns
DISPLAY_PORT	1.09	1.27	3.29	3.49	3.29	3.49	ns
I2C	1.40	1.58	11.70	11.90	11.70	11.90	ns
SMBUS	1.40	1.58	11.70	11.90	11.70	11.90	ns
SDIO	1.43	1.61	2.78	2.98	2.78	2.98	ns
MOBILE_DDR	1.01	1.19	2.50	2.70	2.50	2.70	ns
HSTL_I	1.01	1.19	1.80	2.00	1.80	2.00	ns
HSTL_II	1.01	1.19	1.86	2.06	1.86	2.06	ns
HSTL_III	1.07	1.25	1.81	2.01	1.81	2.01	ns
HSTL_I _18	1.05	1.23	1.91	2.11	1.91	2.11	ns
HSTL_II _18	1.05	1.23	1.99	2.19	1.99	2.19	ns
HSTL_III _18	1.13	1.31	1.93	2.13	1.93	2.13	ns
SSTL3_I	1.65	1.83	1.97	2.17	1.97	2.17	ns
SSTL3_II	1.65	1.83	2.15	2.35	2.15	2.35	ns
SSTL2_I	1.37	1.55	1.91	2.11	1.91	2.11	ns
SSTL2_II	1.37	1.55	2.00	2.20	2.00	2.20	ns
SSTL18_I	0.99	1.17	1.77	1.97	1.77	1.97	ns
SSTL18_II	1.00	1.18	1.80	2.00	1.80	2.00	ns
SSTL15_II	1.00	1.18	1.81	2.01	1.81	2.01	ns
DIFF_HSTL_I	1.01	1.19	1.91	2.11	1.91	2.11	ns
DIFF_HSTL_II	1.00	1.18	1.86	2.06	1.86	2.06	ns
DIFF_HSTL_III	1.00	1.18	1.83	2.03	1.83	2.03	ns
DIFF_HSTL_I_18	1.04	1.22	1.93	2.13	1.93	2.13	ns
DIFF_HSTL_II_18	1.04	1.22	1.83	2.03	1.83	2.03	ns
DIFF_HSTL_III_18	1.04	1.22	1.83	2.03	1.83	2.03	ns

Table 29: **IOB Switching Characteristics for the Automotive XA Spartan-6 and the Spartan-6Q Devices[1] *(Cont'd)***

I/O Standard	T_{IOPI}		T_{IOOP}		T_{IOTP}		Units
	Speed Grade		Speed Grade		Speed Grade		
	-3	-2	-3	-2	-3	-2	
DIFF_SSTL3_I	1.26	1.44	1.95	2.15	1.95	2.15	ns
DIFF_SSTL3_II	1.26	1.44	1.94	2.14	1.94	2.14	ns
DIFF_SSTL2_I	1.09	1.27	1.94	2.14	1.94	2.14	ns
DIFF_SSTL2_II	1.09	1.27	1.90	2.10	1.90	2.10	ns
DIFF_SSTL18_I	1.04	1.22	1.86	2.06	1.86	2.06	ns
DIFF_SSTL18_II	1.05	1.23	1.82	2.02	1.82	2.02	ns
DIFF_SSTL15_II	1.01	1.19	1.81	2.01	1.81	2.01	ns
DIFF_MOBILE_DDR	1.04	1.22	1.89	2.09	1.89	2.09	ns
LVTTL, QUIETIO, 2 mA	1.42	1.60	5.64	5.84	5.64	5.84	ns
LVTTL, QUIETIO, 4 mA	1.42	1.60	4.46	4.66	4.46	4.66	ns
LVTTL, QUIETIO, 6 mA	1.42	1.60	3.92	4.12	3.92	4.12	ns
LVTTL, QUIETIO, 8 mA	1.42	1.60	3.37	3.57	3.37	3.57	ns
LVTTL, QUIETIO, 12 mA	1.42	1.60	3.42	3.62	3.42	3.62	ns
LVTTL, QUIETIO, 16 mA	1.42	1.60	3.09	3.29	3.09	3.29	ns
LVTTL, QUIETIO, 24 mA	1.42	1.60	2.83	3.03	2.83	3.03	ns
LVTTL, Slow, 2 mA	1.42	1.60	4.58	4.78	4.58	4.78	ns
LVTTL, Slow, 4 mA	1.42	1.60	3.38	3.58	3.38	3.58	ns
LVTTL, Slow, 6 mA	1.42	1.60	2.95	3.15	2.95	3.15	ns
LVTTL, Slow, 8 mA	1.42	1.60	2.73	2.93	2.73	2.93	ns
LVTTL, Slow, 12 mA	1.42	1.60	2.72	2.92	2.72	2.92	ns
LVTTL, Slow, 16 mA	1.42	1.60	2.53	2.73	2.53	2.73	ns
LVTTL, Slow, 24 mA	1.42	1.60	2.42	2.62	2.42	2.62	ns
LVTTL, Fast, 2 mA	1.42	1.60	4.04	4.24	4.04	4.24	ns
LVTTL, Fast, 4 mA	1.42	1.60	2.66	2.86	2.66	2.86	ns
LVTTL, Fast, 6 mA	1.42	1.60	2.58	2.78	2.58	2.78	ns
LVTTL, Fast, 8 mA	1.42	1.60	2.46	2.66	2.46	2.66	ns
LVTTL, Fast, 12 mA	1.42	1.60	1.97	2.17	1.97	2.17	ns
LVTTL, Fast, 16 mA	1.42	1.60	1.97	2.17	1.97	2.17	ns
LVTTL, Fast, 24 mA	1.42	1.60	1.97	2.17	1.97	2.17	ns
LVCMOS33, QUIETIO, 2 mA	1.41	1.59	5.65	5.85	5.65	5.85	ns
LVCMOS33, QUIETIO, 4 mA	1.41	1.59	4.20	4.40	4.20	4.40	ns
LVCMOS33, QUIETIO, 6 mA	1.41	1.59	3.65	3.85	3.65	3.85	ns
LVCMOS33, QUIETIO, 8 mA	1.41	1.59	3.51	3.71	3.51	3.71	ns
LVCMOS33, QUIETIO, 12 mA	1.41	1.59	3.09	3.29	3.09	3.29	ns
LVCMOS33, QUIETIO, 16 mA	1.41	1.59	2.91	3.11	2.91	3.11	ns
LVCMOS33, QUIETIO, 24 mA	1.41	1.59	2.73	2.93	2.73	2.93	ns
LVCMOS33, Slow, 2 mA	1.41	1.59	4.59	4.79	4.59	4.79	ns
LVCMOS33, Slow, 4 mA	1.41	1.59	3.14	3.34	3.14	3.34	ns

Table 29: **IOB Switching Characteristics for the Automotive XA Spartan-6 and the Spartan-6Q Devices[1] *(Cont'd)***

I/O Standard	T_{IOPI}		T_{IOOP}		T_{IOTP}		Units
	Speed Grade		Speed Grade		Speed Grade		
	-3	-2	-3	-2	-3	-2	
LVCMOS33, Slow, 6 mA	1.41	1.59	2.79	2.99	2.79	2.99	ns
LVCMOS33, Slow, 8 mA	1.41	1.59	2.79	2.99	2.79	2.99	ns
LVCMOS33, Slow, 12 mA	1.41	1.59	2.53	2.73	2.53	2.73	ns
LVCMOS33, Slow, 16 mA	1.41	1.59	2.45	2.65	2.45	2.65	ns
LVCMOS33, Slow, 24 mA	1.41	1.59	2.42	2.62	2.42	2.62	ns
LVCMOS33, Fast, 2 mA	1.41	1.59	4.05	4.25	4.05	4.25	ns
LVCMOS33, Fast, 4 mA	1.41	1.59	2.66	2.86	2.66	2.86	ns
LVCMOS33, Fast, 6 mA	1.41	1.59	2.46	2.66	2.46	2.66	ns
LVCMOS33, Fast, 8 mA	1.41	1.59	2.21	2.41	2.21	2.41	ns
LVCMOS33, Fast, 12 mA	1.41	1.59	1.80	2.00	1.80	2.00	ns
LVCMOS33, Fast, 16 mA	1.41	1.59	1.80	2.00	1.80	2.00	ns
LVCMOS33, Fast, 24 mA	1.41	1.59	1.80	2.00	1.80	2.00	ns
LVCMOS25, QUIETIO, 2 mA	0.89	1.07	5.00	5.20	5.00	5.20	ns
LVCMOS25, QUIETIO, 4 mA	0.89	1.07	3.85	4.05	3.85	4.05	ns
LVCMOS25, QUIETIO, 6 mA	0.89	1.07	3.60	3.80	3.60	3.80	ns
LVCMOS25, QUIETIO, 8 mA	0.89	1.07	3.34	3.54	3.34	3.54	ns
LVCMOS25, QUIETIO, 12 mA	0.89	1.07	2.98	3.18	2.98	3.18	ns
LVCMOS25, QUIETIO, 16 mA	0.89	1.07	2.79	2.99	2.79	2.99	ns
LVCMOS25, QUIETIO, 24 mA	0.89	1.07	2.64	2.84	2.64	2.84	ns
LVCMOS25, Slow, 2 mA	0.89	1.07	3.96	4.16	3.96	4.16	ns
LVCMOS25, Slow, 4 mA	0.89	1.07	2.96	3.16	2.96	3.16	ns
LVCMOS25, Slow, 6 mA	0.89	1.07	2.88	3.08	2.88	3.08	ns
LVCMOS25, Slow, 8 mA	0.89	1.07	2.63	2.83	2.63	2.83	ns
LVCMOS25, Slow, 12 mA	0.89	1.07	2.15	2.35	2.15	2.35	ns
LVCMOS25, Slow, 16 mA	0.89	1.07	2.15	2.35	2.15	2.35	ns
LVCMOS25, Slow, 24 mA	0.89	1.07	2.15	2.35	2.15	2.35	ns
LVCMOS25, Fast, 2 mA	0.89	1.07	3.52	3.72	3.52	3.72	ns
LVCMOS25, Fast, 4 mA	0.89	1.07	2.43	2.63	2.43	2.63	ns
LVCMOS25, Fast, 6 mA	0.89	1.07	2.23	2.43	2.23	2.43	ns
LVCMOS25, Fast, 8 mA	0.89	1.07	2.16	2.36	2.16	2.36	ns
LVCMOS25, Fast, 12 mA	0.89	1.07	1.70	1.90	1.70	1.90	ns
LVCMOS25, Fast, 16 mA	0.89	1.07	1.70	1.90	1.70	1.90	ns
LVCMOS25, Fast, 24 mA	0.89	1.07	1.70	1.90	1.70	1.90	ns
LVCMOS18, QUIETIO, 2 mA	1.25	1.43	6.11	6.31	6.11	6.31	ns
LVCMOS18, QUIETIO, 4 mA	1.25	1.43	4.88	5.08	4.88	5.08	ns
LVCMOS18, QUIETIO, 6 mA	1.25	1.43	4.20	4.40	4.20	4.40	ns
LVCMOS18, QUIETIO, 8 mA	1.25	1.43	3.86	4.06	3.86	4.06	ns
LVCMOS18, QUIETIO, 12 mA	1.25	1.43	3.49	3.69	3.49	3.69	ns

Table 29: **IOB Switching Characteristics for the Automotive XA Spartan-6 and the Spartan-6Q Devices[1] *(Cont'd)***

I/O Standard	T_{IOPI}		T_{IOOP}		T_{IOTP}		Units
	Speed Grade		Speed Grade		Speed Grade		
	-3	-2	-3	-2	-3	-2	
LVCMOS18, QUIETIO, 16 mA	1.25	1.43	3.34	3.54	3.34	3.54	ns
LVCMOS18, QUIETIO, 24 mA	1.25	1.43	3.18	3.38	3.18	3.38	ns
LVCMOS18, Slow, 2 mA	1.25	1.43	4.79	4.99	4.79	4.99	ns
LVCMOS18, Slow, 4 mA	1.25	1.43	3.84	4.04	3.84	4.04	ns
LVCMOS18, Slow, 6 mA	1.25	1.43	3.17	3.37	3.17	3.37	ns
LVCMOS18, Slow, 8 mA	1.25	1.43	2.37	2.57	2.37	2.57	ns
LVCMOS18, Slow, 12 mA	1.25	1.43	2.13	2.33	2.13	2.33	ns
LVCMOS18, Slow, 16 mA	1.25	1.43	2.13	2.33	2.13	2.33	ns
LVCMOS18, Slow, 24 mA	1.25	1.43	2.13	2.33	2.13	2.33	ns
LVCMOS18, Fast, 2 mA	1.25	1.43	3.78	3.98	3.78	3.98	ns
LVCMOS18, Fast, 4 mA	1.25	1.43	2.54	2.74	2.54	2.74	ns
LVCMOS18, Fast, 6 mA	1.25	1.43	2.02	2.22	2.02	2.22	ns
LVCMOS18, Fast, 8 mA	1.25	1.43	1.95	2.15	1.95	2.15	ns
LVCMOS18, Fast, 12 mA	1.25	1.43	1.85	2.05	1.85	2.05	ns
LVCMOS18, Fast, 16 mA	1.25	1.43	1.85	2.05	1.85	2.05	ns
LVCMOS18, Fast, 24 mA	1.25	1.43	1.85	2.05	1.85	2.05	ns
LVCMOS18_JEDEC, QUIETIO, 2 mA	1.01	1.19	6.09	6.29	6.09	6.29	ns
LVCMOS18_JEDEC, QUIETIO, 4 mA	1.01	1.19	4.89	5.09	4.89	5.09	ns
LVCMOS18_JEDEC, QUIETIO, 6 mA	1.01	1.19	4.20	4.40	4.20	4.40	ns
LVCMOS18_JEDEC, QUIETIO, 8 mA	1.01	1.19	3.87	4.07	3.87	4.07	ns
LVCMOS18_JEDEC, QUIETIO, 12 mA	1.01	1.19	3.49	3.69	3.49	3.69	ns
LVCMOS18_JEDEC, QUIETIO, 16 mA	1.01	1.19	3.34	3.54	3.34	3.54	ns
LVCMOS18_JEDEC, QUIETIO, 24 mA	1.01	1.19	3.17	3.37	3.17	3.37	ns
LVCMOS18_JEDEC, Slow, 2 mA	1.01	1.19	4.79	4.99	4.79	4.99	ns
LVCMOS18_JEDEC, Slow, 4 mA	1.01	1.19	3.84	4.04	3.84	4.04	ns
LVCMOS18_JEDEC, Slow, 6 mA	1.01	1.19	3.18	3.38	3.18	3.38	ns
LVCMOS18_JEDEC, Slow, 8 mA	1.01	1.19	2.37	2.57	2.37	2.57	ns
LVCMOS18_JEDEC, Slow, 12 mA	1.01	1.19	2.13	2.33	2.13	2.33	ns
LVCMOS18_JEDEC, Slow, 16 mA	1.01	1.19	2.13	2.33	2.13	2.33	ns
LVCMOS18_JEDEC, Slow, 24 mA	1.01	1.19	2.13	2.33	2.13	2.33	ns
LVCMOS18_JEDEC, Fast, 2 mA	1.01	1.19	3.75	3.95	3.75	3.95	ns
LVCMOS18_JEDEC, Fast, 4 mA	1.01	1.19	2.54	2.74	2.54	2.74	ns
LVCMOS18_JEDEC, Fast, 6 mA	1.01	1.19	2.02	2.22	2.02	2.22	ns
LVCMOS18_JEDEC, Fast, 8 mA	1.01	1.19	1.94	2.14	1.94	2.14	ns
LVCMOS18_JEDEC, Fast, 12 mA	1.01	1.19	1.86	2.06	1.86	2.06	ns
LVCMOS18_JEDEC, Fast, 16 mA	1.01	1.19	1.86	2.06	1.86	2.06	ns
LVCMOS18_JEDEC, Fast, 24 mA	1.01	1.19	1.86	2.06	1.86	2.06	ns

Table 29: **IOB Switching Characteristics for the Automotive XA Spartan-6 and the Spartan-6Q Devices[1] *(Cont'd)***

I/O Standard	T_{IOPI}		T_{IOOP}		T_{IOTP}		Units
	Speed Grade		Speed Grade		Speed Grade		
	-3	-2	-3	-2	-3	-2	
LVCMOS15, QUIETIO, 2 mA	1.05	1.23	5.63	5.83	5.63	5.83	ns
LVCMOS15, QUIETIO, 4 mA	1.05	1.23	4.75	4.95	4.75	4.95	ns
LVCMOS15, QUIETIO, 6 mA	1.05	1.23	4.21	4.41	4.21	4.41	ns
LVCMOS15, QUIETIO, 8 mA	1.05	1.23	4.05	4.25	4.05	4.25	ns
LVCMOS15, QUIETIO, 12 mA	1.05	1.23	3.74	3.94	3.74	3.94	ns
LVCMOS15, QUIETIO, 16 mA	1.05	1.23	3.52	3.72	3.52	3.72	ns
LVCMOS15, Slow, 2 mA	1.05	1.23	4.32	4.52	4.32	4.52	ns
LVCMOS15, Slow, 4 mA	1.05	1.23	3.58	3.78	3.58	3.78	ns
LVCMOS15, Slow, 6 mA	1.05	1.23	2.45	2.65	2.45	2.65	ns
LVCMOS15, Slow, 8 mA	1.05	1.23	2.46	2.66	2.46	2.66	ns
LVCMOS15, Slow, 12 mA	1.05	1.23	2.17	2.37	2.17	2.37	ns
LVCMOS15, Slow, 16 mA	1.05	1.23	2.15	2.35	2.15	2.35	ns
LVCMOS15, Fast, 2 mA	1.05	1.23	3.43	3.63	3.43	3.63	ns
LVCMOS15, Fast, 4 mA	1.05	1.23	2.42	2.62	2.42	2.62	ns
LVCMOS15, Fast, 6 mA	1.05	1.23	1.92	2.12	1.92	2.12	ns
LVCMOS15, Fast, 8 mA	1.05	1.23	1.87	2.07	1.87	2.07	ns
LVCMOS15, Fast, 12 mA	1.05	1.23	1.87	2.07	1.87	2.07	ns
LVCMOS15, Fast, 16 mA	1.05	1.23	1.87	2.07	1.87	2.07	ns
LVCMOS15_JEDEC, QUIETIO, 2 mA	1.10	1.28	5.64	5.84	5.64	5.84	ns
LVCMOS15_JEDEC, QUIETIO, 4 mA	1.10	1.28	4.75	4.95	4.75	4.95	ns
LVCMOS15_JEDEC, QUIETIO, 6 mA	1.10	1.28	4.21	4.41	4.21	4.41	ns
LVCMOS15_JEDEC, QUIETIO, 8 mA	1.10	1.28	4.06	4.26	4.06	4.26	ns
LVCMOS15_JEDEC, QUIETIO, 12 mA	1.10	1.28	3.75	3.95	3.75	3.95	ns
LVCMOS15_JEDEC, QUIETIO, 16 mA	1.10	1.28	3.53	3.73	3.53	3.73	ns
LVCMOS15_JEDEC, Slow, 2 mA	1.10	1.28	4.32	4.52	4.32	4.52	ns
LVCMOS15_JEDEC, Slow, 4 mA	1.10	1.28	3.56	3.76	3.56	3.76	ns
LVCMOS15_JEDEC, Slow, 6 mA	1.10	1.28	2.44	2.64	2.44	2.64	ns
LVCMOS15_JEDEC, Slow, 8 mA	1.10	1.28	2.47	2.67	2.47	2.67	ns
LVCMOS15_JEDEC, Slow, 12 mA	1.10	1.28	2.15	2.35	2.15	2.35	ns
LVCMOS15_JEDEC, Slow, 16 mA	1.10	1.28	2.15	2.35	2.15	2.35	ns
LVCMOS15_JEDEC, Fast, 2 mA	1.10	1.28	3.43	3.63	3.43	3.63	ns
LVCMOS15_JEDEC, Fast, 4 mA	1.10	1.28	2.42	2.62	2.42	2.62	ns
LVCMOS15_JEDEC, Fast, 6 mA	1.10	1.28	1.92	2.12	1.92	2.12	ns
LVCMOS15_JEDEC, Fast, 8 mA	1.10	1.28	1.87	2.07	1.87	2.07	ns
LVCMOS15_JEDEC, Fast, 12 mA	1.10	1.28	1.87	2.07	1.87	2.07	ns
LVCMOS15_JEDEC, Fast, 16 mA	1.10	1.28	1.87	2.07	1.87	2.07	ns
LVCMOS12, QUIETIO, 2 mA	0.98	1.16	6.54	6.74	6.54	6.74	ns
LVCMOS12, QUIETIO, 4 mA	0.98	1.16	5.12	5.32	5.12	5.32	ns

Table 29: **IOB Switching Characteristics for the Automotive XA Spartan-6 and the Spartan-6Q Devices[1] *(Cont'd)***

I/O Standard	T_{IOPI}		T_{IOOP}		T_{IOTP}		Units
	Speed Grade		Speed Grade		Speed Grade		
	-3	-2	-3	-2	-3	-2	
LVCMOS12, QUIETIO, 6 mA	0.98	1.16	4.79	4.99	4.79	4.99	ns
LVCMOS12, QUIETIO, 8 mA	0.98	1.16	4.43	4.63	4.43	4.63	ns
LVCMOS12, QUIETIO, 12 mA	0.98	1.16	4.18	4.38	4.18	4.38	ns
LVCMOS12, Slow, 2 mA	0.98	1.16	5.12	5.32	5.12	5.32	ns
LVCMOS12, Slow, 4 mA	0.98	1.16	3.00	3.20	3.00	3.20	ns
LVCMOS12, Slow, 6 mA	0.98	1.16	2.91	3.11	2.91	3.11	ns
LVCMOS12, Slow, 8 mA	0.98	1.16	2.51	2.71	2.51	2.71	ns
LVCMOS12, Slow, 12 mA	0.98	1.16	2.25	2.45	2.25	2.45	ns
LVCMOS12, Fast, 2 mA	0.98	1.16	3.60	3.80	3.60	3.80	ns
LVCMOS12, Fast, 4 mA	0.98	1.16	2.49	2.69	2.49	2.69	ns
LVCMOS12, Fast, 6 mA	0.98	1.16	1.94	2.14	1.94	2.14	ns
LVCMOS12, Fast, 8 mA	0.98	1.16	1.82	2.02	1.82	2.02	ns
LVCMOS12, Fast, 12 mA	0.98	1.16	1.80	2.00	1.80	2.00	ns
LVCMOS12_JEDEC, QUIETIO, 2 mA	1.57	1.75	6.53	6.73	6.53	6.73	ns
LVCMOS12_JEDEC, QUIETIO, 4 mA	1.57	1.75	5.12	5.32	5.12	5.32	ns
LVCMOS12_JEDEC, QUIETIO, 6 mA	1.57	1.75	4.81	5.01	4.81	5.01	ns
LVCMOS12_JEDEC, QUIETIO, 8 mA	1.57	1.75	4.44	4.64	4.44	4.64	ns
LVCMOS12_JEDEC, QUIETIO, 12 mA	1.57	1.75	4.20	4.40	4.20	4.40	ns
LVCMOS12_JEDEC, Slow, 2 mA	1.57	1.75	5.14	5.34	5.14	5.34	ns
LVCMOS12_JEDEC, Slow, 4 mA	1.57	1.75	2.99	3.19	2.99	3.19	ns
LVCMOS12_JEDEC, Slow, 6 mA	1.57	1.75	2.90	3.10	2.90	3.10	ns
LVCMOS12_JEDEC, Slow, 8 mA	1.57	1.75	2.50	2.70	2.50	2.70	ns
LVCMOS12_JEDEC, Slow, 12 mA	1.57	1.75	2.26	2.46	2.26	2.46	ns
LVCMOS12_JEDEC, Fast, 2 mA	1.57	1.75	3.60	3.80	3.60	3.80	ns
LVCMOS12_JEDEC, Fast, 4 mA	1.57	1.75	2.49	2.69	2.49	2.69	ns
LVCMOS12_JEDEC, Fast, 6 mA	1.57	1.75	1.94	2.14	1.94	2.14	ns
LVCMOS12_JEDEC, Fast, 8 mA	1.57	1.75	1.83	2.03	1.83	2.03	ns
LVCMOS12_JEDEC, Fast, 12 mA	1.57	1.75	1.80	2.00	1.80	2.00	ns

Notes:

1. The Spartan-6Q FPGA -1L values are listed in Table 28.

Table 30 summarizes the value of T_{IOTPHZ}. T_{IOTPHZ} is described as the delay from the T pin to the IOB pad through the output buffer of an IOB pad, when 3-state is enabled (i.e., a high impedance state). These delays are measured using LVCMOS25, Fast, 12 mA.

Table 30: **IOB 3-state ON Output Switching Characteristics (T_{IOTPHZ})**

Symbol	Description	Speed Grade				Units
		-3	-3N	-2	-1L	
T_{IOTPHZ}	T input to Pad high-impedance	1.39	1.59	1.59	1.91	ns

I/O Standard Measurement Methodology

Input Delay Measurements

Table 31 shows the test setup parameters used for measuring input delay.

Table 31: **Input Delay Measurement Methodology**

Description	I/O Standard Attribute	V_L[1]	V_H[1]	V_{MEAS}[3][4]	V_{REF}[2][4]
LVTTL (Low-Voltage Transistor-Transistor Logic)	LVTTL	0	3.0	1.4	–
LVCMOS (Low-Voltage CMOS), 3.3V	LVCMOS33	0	3.3	1.65	–
LVCMOS, 2.5V	LVCMOS25	0	2.5	1.25	–
LVCMOS, 1.8V	LVCMOS18	0	1.8	0.9	–
LVCMOS, 1.5V	LVCMOS15	0	1.5	0.75	–
LVCMOS, 1.2V	LVCMOS12	0	1.2	0.6	–
PCI (Peripheral Component Interface), 33 MHz and 66 MHz, 3.3V	PCI33_3, PCI66_3	Per PCI Specification			–
HSTL (High-Speed Transceiver Logic), Class I & II	HSTL_I, HSTL_II	V_{REF} – 0.5	V_{REF} + 0.5	V_{REF}	0.75
HSTL, Class III	HSTL_III	V_{REF} – 0.5	V_{REF} + 0.5	V_{REF}	0.90
HSTL, Class I & II, 1.8V	HSTL_I_18, HSTL_II_18	V_{REF} – 0.5	V_{REF} + 0.5	V_{REF}	0.90
HSTL, Class III 1.8V	HSTL_III_18	V_{REF} – 0.5	V_{REF} + 0.5	V_{REF}	1.1
SSTL (Stub Terminated Transceiver Logic), Class I & II, 3.3V	SSTL3_I, SSTL3_II	V_{REF} – 0.75	V_{REF} + 0.75	V_{REF}	1.5
SSTL, Class I & II, 2.5V	SSTL2_I, SSTL2_II	V_{REF} – 0.75	V_{REF} + 0.75	V_{REF}	1.25
SSTL, Class I & II, 1.8V	SSTL18_I, SSTL18_II	V_{REF} – 0.5	V_{REF} + 0.5	V_{REF}	0.90
SSTL, Class II, 1.5V	SSTL15_II	V_{REF} – 0.2	V_{REF} + 0.2	V_{REF}	0.75
LVDS (Low-Voltage Differential Signaling), 2.5V & 3.3V	LVDS_25, LVDS_33	1.25 – 0.125	1.25 + 0.125	0[5]	–
LVPECL (Low-Voltage Positive Emitter-Coupled Logic), 2.5V & 3.3V	LVPECL_25, LVPECL_33	1.2 – 0.3	1.2 + 0.3	0[5]	–
BLVDS (Bus LVDS), 2.5V	BLVDS_25	1.3 – 0.125	1.3 + 0.125	0[5]	–
Mini-LVDS, 2.5V & 3.3V	MINI_LVDS_25, MINI_LVDS_33	1.2 – 0.125	1.2 + 0.125	0[5]	–
RSDS (Reduced Swing Differential Signaling), 2.5V & 3.3V	RSDS_25, RSDS_33	1.2 – 0.1	1.2 + 0.1	0[5]	–
TMDS (Transition Minimized Differential Signaling), 3.3V	TMDS_33	3.0 – 0.1	3.0 + 0.1	0[5]	–
PPDS (Point-to-Point Differential Signaling, 2.5V & 3.3V	PPDS_25, PPDS_33	1.25 – 0.1	1.25 + 0.1	0[5]	–

Notes:
1. Input waveform switches between V_L and V_H.
2. Measurements are made at typical, minimum, and maximum V_{REF} values. Reported delays reflect worst case of these measurements. V_{REF} values listed are typical.
3. Input voltage level from which measurement starts.
4. This is an input voltage reference that bears no relation to the V_{REF} / V_{MEAS} parameters found in IBIS models and/or noted in Figure 4.
5. The value given is the differential input voltage.

Output Delay Measurements

Output delays are measured using a Tektronix P6245 TDS500/600 probe (< 1 pF) across approximately 4" of FR4 microstrip trace. Standard termination was used for all testing. The propagation delay of the 4" trace is characterized separately and subtracted from the final measurement, and is therefore not included in the generalized test setups shown in Figure 4 and Figure 5.

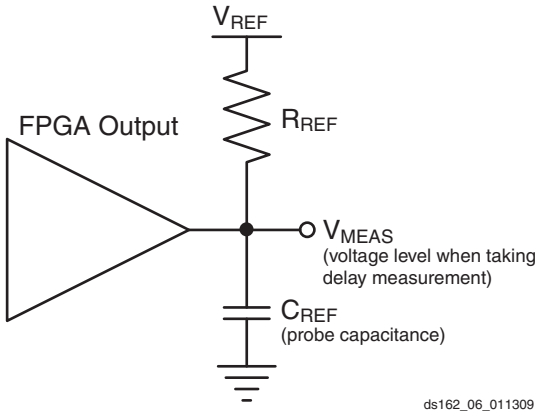

Figure 4: **Single-Ended Test Setup**

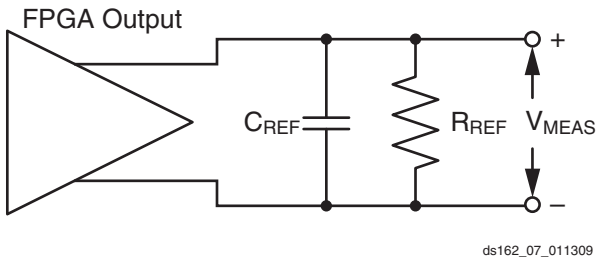

Figure 5: **Differential Test Setup**

Measurements and test conditions are reflected in the IBIS models except where the IBIS format precludes it. Parameters V_{REF}, R_{REF}, C_{REF}, and V_{MEAS} fully describe the test conditions for each I/O standard. The most accurate prediction of propagation delay in any given application can be obtained through IBIS simulation, using the following method:

1. Simulate the output driver of choice into the generalized test setup, using values from Table 32.
2. Record the time to V_{MEAS}.
3. Simulate the output driver of choice into the actual PCB trace and load, using the appropriate IBIS model or capacitance value to represent the load.
4. Record the time to V_{MEAS}.
5. Compare the results of steps 2 and 4. The increase or decrease in delay yields the actual propagation delay of the PCB trace.

Table 32: **Output Delay Measurement Methodology**

Description	I/O Standard Attribute	R_{REF} (Ω)	C_{REF} (1) (pF)	V_{MEAS} (V)	V_{REF} (V)
LVTTL (Low-Voltage Transistor-Transistor Logic)	LVTTL (all)	1M	0	1.4	0
LVCMOS (Low-Voltage CMOS), 3.3V	LVCMOS33	1M	0	1.65	0
LVCMOS, 2.5V	LVCMOS25	1M	0	1.25	0
LVCMOS, 1.8V	LVCMOS18	1M	0	0.9	0
LVCMOS, 1.5V	LVCMOS15	1M	0	0.75	0
LVCMOS, 1.2V	LVCMOS12	1M	0	0.6	0
PCI (Peripheral Component Interface) 33 MHz and 66 MHz, 3.3V	PCI33_3, PCI66_3 (rising edge)	25	10 (2)	0.94	0
	PCI33_3, PCI66_3 (falling edge)	25	10 (2)	2.03	3.3
HSTL (High-Speed Transceiver Logic), Class I	HSTL_I	50	0	V_{REF}	0.75
HSTL, Class II	HSTL_II	25	0	V_{REF}	0.75
HSTL, Class III	HSTL_III	50	0	0.9	1.5
HSTL, Class I, 1.8V	HSTL_I_18	50	0	V_{REF}	0.9
HSTL, Class II, 1.8V	HSTL_II_18	25	0	V_{REF}	0.9
HSTL, Class III, 1.8V	HSTL_III_18	50	0	1.1	1.8
SSTL (Stub Series Terminated Logic), Class I, 1.8V	SSTL18_I	50	0	V_{REF}	0.9
SSTL, Class II, 1.8V	SSTL18_II	25	0	V_{REF}	0.9
SSTL, Class I, 2.5V	SSTL2_I	50	0	V_{REF}	1.25

Table 32: **Output Delay Measurement Methodology *(Cont'd)***

Description	I/O Standard Attribute	R_{REF} (Ω)	C_{REF}[1] (pF)	V_{MEAS} (V)	V_{REF} (V)
SSTL, Class II, 2.5V	SSTL2_II	25	0	V_{REF}	1.25
SSTL, Class II, 1.5V	SSTL15_II	25	0	V_{REF}	0.75
LVDS (Low-Voltage Differential Signaling), 2.5V & 3.3V	LVDS_25, LVDS_33	100	0	0[3]	–
BLVDS (Bus LVDS), 2.5V	BLVDS_25	Note 4	0	0[3]	–
Mini-LVDS, 2.5V & 3.3V	MINI_LVDS_25, MINI_LVDS_33	100	0	0[3]	–
RSDS (Reduced Swing Differential Signaling), 2.5V & 3.3V	RSDS_25, RSDS_33	100	0	0[3]	–
TMDS (Transition Minimized Differential Signaling), 3.3V	TMDS_33	Note 5	0	0[3]	–
PPDS (Point-to-Point Differential Signaling, 2.5V & 3.3V	PPDS_25, PPDS_33	100	0	0[3]	–

Notes:
1. C_{REF} is the capacitance of the probe, nominally 0 pF.
2. Per PCI specifications.
3. The value given is the differential output voltage.
4. See the *BLVDS Output Termination* section in UG381, *Spartan-6 FPGA SelectIO Resources User Guide*.
5. See the *TMDS_33 Termination* section in UG381, *Spartan-6 FPGA SelectIO Resources User Guide*.

Simultaneously Switching Outputs

Due to package electrical parasitics, a given package supports a limited number of simultaneous switching outputs (SSOs) when using fast, high-drive outputs. Table 33 and Table 34 provide guidelines for the recommended maximum allowable number of SSOs. These guidelines describe the maximum number of user I/O pins of an output signal standard that should simultaneously switch in the same direction, while maintaining a safe level of switching noise for that particular signal standard. Meeting these guidelines for the stated test conditions ensures that the FPGA operates free from the adverse effects of GND and power bounce.

For each device/package combination, Table 33 provides the number of equivalent V_{CCO}/GND pairs per bank. For each output signal standard and drive strength, Table 34 recommends the maximum number of SSOs, switching in the same direction, allowed per V_{CCO}/GND pair within an I/O bank. The guidelines are categorized by package style, slew rate, and output drive current. The number of SSOs are also specified by I/O bank. Multiply the appropriate numbers from each table to calculate the maximum number of SSOs allowed within an I/O bank. The guidelines assume that all pins within a bank use the same I/O standard. Although in general lower DRIVE settings improve SSO characteristics, in some instances higher DRIVE settings improve SSO values because they also improve noise margin. Analysis using the PlanAhead tool supports mixed standards within a bank. Exceeding these SSO guidelines can result in increased power or GND bounce, degraded signal integrity, or increased system jitter. For a given I/O standard, if the SSO limit per pair in Table 34 is greater than the maximum I/O per pair in Table 33, then there is no SSO limit for the exclusive use of that I/O standard.

The recommended maximum SSO values assume that the FPGA is soldered on a printed circuit board and that the board uses sound design practices. Due to the additional inductance introduced by the socket, the SSO values do not apply for FPGAs mounted in sockets. The SSO values assume that the V_{CCAUX} is powered at 3.3V. Setting V_{CCAUX} to 2.5V provides better SSO characteristics. For more detail, see UG381: *Spartan-6 FPGA SelectIO Resources User Guide*.

SSO analysis does not take relative pin locations into account. The PlanAhead tool supports simultaneous switching noise (SSN) analysis, which is based on relative pin locations, allowing the optimal choice of package pins. For more information, see UG792: *Pin Planning Methodology Guide*.

There are also restrictions on using SelectIO resources in proximity to GTP transceivers. For more information, see UG386: *Spartan-6 FPGA GTP Transceivers User Guide*.

Table 33: **Spartan-6 FPGA V_{CCO}/GND Pairs per Bank**

Package	Devices	Description	Bank 0	Bank 1	Bank 2	Bank 3	Bank 4	Bank 5
TQG144	LX	V_{CCO}/GND Pairs	3	3	2	3	N/A	N/A
		Maximum I/O per Pair	8	8	13	8	N/A	N/A
CPG196	LX	VCCO/GND Pairs	4	6	4	6	N/A	N/A
		Maximum I/O per Pair	6	4	7	4	N/A	N/A
CSG225	LX	V_{CCO}/GND Pairs	4	4	4	4	N/A	N/A
		Maximum I/O per Pair	10	10	9	10	N/A	N/A
FT(G)256	LX	V_{CCO}/GND Pairs	5	6	4	5	N/A	N/A
		Maximum I/O per Pair	8	9	9	10	N/A	N/A
CSG324	LX	V_{CCO}/GND Pairs	6	6	6	6	N/A	N/A
		Maximum I/O per Pair	10	9	10	9	N/A	N/A
	LXT	V_{CCO}/GND Pairs	4	6	6	6	N/A	N/A
		Maximum I/O per Pair	4	9	10	9	N/A	N/A
CS(G)484	LX	V_{CCO}/GND Pairs	8	13	8	13	N/A	N/A
		Maximum I/O per Pair	7	8	7	8	N/A	N/A
	LXT	V_{CCO}/GND Pairs	7	12	8	13	N/A	N/A
		Maximum I/O per Pair	5	8	6	8	N/A	N/A
FG(G)484	LX	V_{CCO}/GND Pairs	10	10	11	11	N/A	N/A
		Maximum I/O per Pair	6	8	9	8	N/A	N/A
	LXT	V_{CCO}/GND Pairs	6	10	11	10	N/A	N/A
		Maximum I/O per Pair	7	8	7	8	N/A	N/A
FG(G)676	LX45	V_{CCO}/GND Pairs	12	15	10	16	N/A	N/A
		Maximum I/O per Pair	3	7	8	7	N/A	N/A
	LX75, LX100, LX150	V_{CCO}/GND Pairs	12	9	10	10	6	6
		Maximum I/O per Pair	9	10	9	9	8	9
	LXT	V_{CCO}/GND Pairs	10	8	10	8	7	7
		Maximum I/O per Pair	8	7	8	8	7	7
FG(G)900	LX	V_{CCO}/GND Pairs	17	14	17	14	7	8
		Maximum I/O per Pair	7	6	7	8	7	6
	LXT	V_{CCO}/GND Pairs	15	14	13	14	7	8
		Maximum I/O per Pair	7	6	8	8	7	6

Table 34: **SSO Limit per V_{CCO}/GND Pair**

V_{CCO}	I/O Standard	Drive	Slew	SSO Limit per V_{CCO}/GND Pair			
				All TQG144, CPG196, CSG225, FT(G)256, and LX devices in CSG324		All CS(G)484, FG(G)484, FG(G)676, FG(G)900, and LXT devices in CSG324	
				Bank 0/2	Bank 1/3	Bank 0/2	Bank 1/3/4/5
1.2V	LVCMOS12, LVCMOS12_JEDEC	2	Fast	30 (1)	35	30	35
			Slow	51	55	51	52
			QuietIO	71	58	71	70
		4	Fast	17	17	17	19
			Slow	23	25	23	22
			QuietIO	35	32	35	32
		6	Fast	13	15	13	14
			Slow	19	20	19	17
			QuietIO	26	24	26	24
		8	Fast	N/A	12	N/A	12
			Slow	N/A	15	N/A	13
			QuietIO	N/A	20	N/A	19
		12	Fast	N/A	5	N/A	4
			Slow	N/A	8	N/A	5
			QuietIO	N/A	11	N/A	10

Table 34: **SSO Limit per V_{CCO}/GND Pair *(Cont'd)***

V_{CCO}	I/O Standard	Drive	Slew	SSO Limit per V_{CCO}/GND Pair			
				All TQG144, CPG196, CSG225, FT(G)256, and LX devices in CSG324		All CS(G)484, FG(G)484, FG(G)676, FG(G)900, and LXT devices in CSG324	
				Bank 0/2	Bank 1/3	Bank 0/2	Bank 1/3/4/5
1.5V	LVCMOS15, LVCMOS15_JEDEC	2	Fast	33	40	33	41
			Slow	57	62	57	56
			QuietIO	70	67	70	66
		4	Fast	19	21	19	21
			Slow	30	30	30	24
			QuietIO	38	33	38	30
		6	Fast	14	16	14	16
			Slow	18	19	18	17
			QuietIO	27	24	27	21
		8	Fast	11	13	11	12
			Slow	16	16	16	14
			QuietIO	23	20	23	17
		12	Fast	N/A	5	N/A	4
			Slow	N/A	8	N/A	5
			QuietIO	N/A	10	N/A	9
		16	Fast	N/A	5	N/A	4
			Slow	N/A	8	N/A	8
			QuietIO	N/A	10	N/A	9
	HSTL_I			9	10	9	10
	HSTL_II			N/A	5	N/A	6
	HSTL_III			7	9	7	9
	DIFF_HSTL_I			27	30	27	30
	DIFF_HSTL_II			N/A	15	N/A	18
	DIFF_HSTL_III			21	27	21	27
	SSTL_15_II (3)			N/A	5	N/A	4
	DIFF_SSTL_15_II (3)			N/A	15	N/A	12

Table 34: **SSO Limit per V_{CCO}/GND Pair *(Cont'd)***

V_{CCO}	I/O Standard	Drive	Slew	SSO Limit per V_{CCO}/GND Pair			
				All TQG144, CPG196, CSG225, FT(G)256, and LX devices in CSG324		All CS(G)484, FG(G)484, FG(G)676, FG(G)900, and LXT devices in CSG324	
				Bank 0/2	Bank 1/3	Bank 0/2	Bank 1/3/4/5
1.8V	LVCMOS18, LVCMOS18_JEDEC	2	Fast	39	46	39	47
			Slow	65	75	65	74
			QuietIO	80	80	80	85
		4	Fast	22	25	22	25
			Slow	38	36	38	29
			QuietIO	45	40	45	35
		6	Fast	16	18	16	17
			Slow	27	25	27	19
			QuietIO	30	28	30	23
		8	Fast	13	15	13	14
			Slow	16	18	16	16
			QuietIO	25	22	25	18
		12	Fast	5	7	5	5
			Slow	7	8	7	6
			QuietIO	11	10	11	8
		16	Fast	4	5	4	4
			Slow	7	8	7	5
			QuietIO	11	10	11	8
		24	Fast	N/A	5	N/A	3
			Slow	N/A	8	N/A	8
			QuietIO	N/A	10	N/A	8
	HSTL_I_18			9	10	9	9
	HSTL_II_18			N/A	5	N/A	6
	HSTL_III_18			9	10	9	11
	DIFF_HSTL_I_18			27	30	27	27
	DIFF_HSTL_II_18			N/A	15	N/A	18
	DIFF_HSTL_III_18			27	30	27	33
	MOBILE_DDR (3)			12	14	12	14
	DIFF_MOBILE_DDR (3)			36	42	36	42
	SSTL_18_I (3)			9	10	9	10
	SSTL_18_II (3)			N/A	5	N/A	4
	DIFF_SSTL_18_I (3)			27	30	27	30
	DIFF_SSTL_18_II (3)			N/A	15	N/A	12

Table 34: **SSO Limit per V_{CCO}/GND Pair *(Cont'd)***

V_{CCO}	I/O Standard	Drive	Slew	SSO Limit per V_{CCO}/GND Pair			
				All TQG144, CPG196, CSG225, FT(G)256, and LX devices in CSG324		All CS(G)484, FG(G)484, FG(G)676, FG(G)900, and LXT devices in CSG324	
				Bank 0/2	Bank 1/3	Bank 0/2	Bank 1/3/4/5
2.5V	LVCMOS25	2	Fast	38	43	38	43
			Slow	46	52	46	48
			QuietIO	57	64	57	59
		4	Fast	21	24	21	23
			Slow	26	31	26	27
			QuietIO	33	32	33	30
		6	Fast	15	17	15	16
			Slow	19	22	19	19
			QuietIO	25	23	25	19
		8	Fast	12	15	12	14
			Slow	15	18	15	16
			QuietIO	21	19	21	16
		12	Fast	1	3	1	1
			Slow	2	7	2	4
			QuietIO	3	8	3	8
		16	Fast	1	3	1	1
			Slow	3	7	3	3
			QuietIO	4	9	4	8
		24	Fast	N/A	3	N/A	1
			Slow	N/A	5	N/A	2
			QuietIO	N/A	8	N/A	6
	SSTL_2_I (3)			10	11	10	11
	SSTL_2_II (3)			N/A	7	N/A	7
	DIFF_SSTL_2_I (3)			30	33	30	33
	DIFF_SSTL_2_II (3)			N/A	21	N/A	24

Table 34: **SSO Limit per V_{CCO}/GND Pair *(Cont'd)***

V_{CCO}	I/O Standard	Drive	Slew	SSO Limit per V_{CCO}/GND Pair			
				All TQG144, CPG196, CSG225, FT(G)256, and LX devices in CSG324		All CS(G)484, FG(G)484, FG(G)676, FG(G)900, and LXT devices in CSG324	
				Bank 0/2	Bank 1/3	Bank 0/2	Bank 1/3/4/5
3.3V	LVCMOS33	2	Fast	42	46	42	44
			Slow	50	55	50	49
			QuietIO	60	68	60	60
		4	Fast	21	27	21	25
			Slow	32	37	32	32
			QuietIO	39	42	39	37
		6	Fast	14	19	14	17
			Slow	19	25	19	22
			QuietIO	29	30	29	25
		8	Fast	11	15	11	14
			Slow	15	20	15	18
			QuietIO	25	24	25	20
		12	Fast	1	3	1	1
			Slow	2	5	2	2
			QuietIO	4	9	4	7
		16	Fast	1	2	1	1
			Slow	1	5	1	1
			QuietIO	3	10	3	8
		24	Fast	1	2	1	1
			Slow	2	5	2	1
			QuietIO	7	9	7	7

Table 34: **SSO Limit per V_{CCO}/GND Pair *(Cont'd)***

V_{CCO}	I/O Standard	Drive	Slew	SSO Limit per V_{CCO}/GND Pair			
				All TQG144, CPG196, CSG225, FT(G)256, and LX devices in CSG324		All CS(G)484, FG(G)484, FG(G)676, FG(G)900, and LXT devices in CSG324	
				Bank 0/2	Bank 1/3	Bank 0/2	Bank 1/3/4/5
3.3V	LVTTL	2	Fast	53	65	53	62
			Slow	70	80	70	73
			QuietIO	79	89	79	91
		4	Fast	23	30	23	27
			Slow	34	41	34	37
			QuietIO	44	49	44	46
		6	Fast	16	21	16	20
			Slow	21	28	21	25
			QuietIO	34	39	34	34
		8	Fast	12	16	12	15
			Slow	16	22	16	19
			QuietIO	27	28	27	24
		12	Fast	1	3	1	1
			Slow	2	5	2	4
			QuietIO	2	10	2	8
		16	Fast	1	3	1	1
			Slow	1	7	1	2
			QuietIO	3	11	3	8
		24	Fast	1	2	1	1
			Slow	2	5	2	2
			QuietIO	8	9	8	8
	PCI33_3			18	19	18	19
	PCI66_3			18	19	18	19
	SSTL_3_I			5	8	5	8
	SSTL_3_II			3	5	3	3
	DIFF_SSTL_3_I			15	24	15	24
	DIFF_SSTL_3_II			9	15	9	9
	SDIO			17	18	17	15

Table 34: **SSO Limit per V_{CCO}/GND Pair *(Cont'd)***

V_{CCO}	I/O Standard	Drive	Slew	SSO Limit per V_{CCO}/GND Pair			
				All TQG144, CPG196, CSG225, FT(G)256, and LX devices in CSG324		All CS(G)484, FG(G)484, FG(G)676, FG(G)900, and LXT devices in CSG324	
				Bank 0/2	Bank 1/3	Bank 0/2	Bank 1/3/4/5
Various	LVDS_33			16	N/A	16	N/A
	LVDS_25			20	N/A	20	N/A
	BLVDS_25			20	48	20	20
	MINI_LVDS_33			13	N/A	13	N/A
	MINI_LVDS_25			18	N/A	18	N/A
	RSDS_33			12	N/A	12	N/A
	RSDS_25			15	N/A	15	N/A
	TMDS_33			83	N/A	83	N/A
	PPDS_33			12	N/A	12	N/A
	PPDS_25			16	N/A	16	N/A
	DISPLAY_PORT			42	40	42	30
	I2C			47	55	47	42
	SMBUS			44	52	44	40

Notes:

1. SSO limits greater than the number of I/O per V_{CCO}/GND pair (Table 33) indicate No Limit for the given I/O standard. They are provided in this table to calculate limits when using multiple I/O standards in a bank.
2. Not available (N/A) indicates that the I/O standard is not available in the given bank.
3. When used with the MCB, these signals are exempt from SSO analysis due to the known activity of the MCB switching patterns. SSO performance is validated for all MCB instances. MCB outputs can, in some cases, exceed the SSO limits.

Input/Output Logic Switching Characteristics

Table 35: **ILOGIC2 Switching Characteristics**

Symbol	Description	Speed Grade				Units
		-3	-3N	-2	-1L	
Setup/Hold						
T_{ICE0CK}/T_{ICKCE0}	CE0 pin Setup/Hold with respect to CLK	0.56/ –0.30	0.56/ –0.25	0.79/ –0.22	1.21/ –0.52	ns
T_{ISRCK}/T_{ICKSR}	SR pin Setup/Hold with respect to CLK	0.74/ –0.23	0.74/ –0.22	0.98/ –0.20	1.31/ –0.45	ns
T_{IDOCK}/T_{IOCKD}	D pin Setup/Hold with respect to CLK without Delay	1.19/ –0.83	1.36/ –0.83	1.73/ –0.83	2.18/ –1.77	ns
T_{IDOCKD}/T_{IOCKDD}	DDLY pin Setup/Hold with respect to CLK (using IODELAY2)	0.31/ 0.00	0.47/ 0.00	0.54/ 0.00	0.63/ –0.39	ns
Combinatorial						
T_{IDI}	D pin to O pin propagation delay, no Delay	0.95	1.28	1.53	2.25	ns
T_{IDID}	DDLY pin to O pin propagation delay (using IODELAY2)	0.23	0.39	0.44	0.74	ns
Sequential Delays						
T_{IDLO}	D pin to Q pin using flip-flop as a latch without Delay	1.56	1.86	2.39	3.49	ns
T_{IDLOD}	DDLY pin to Q1 pin using flip-flop as a latch (using IODELAY2)	0.68	0.97	1.20	1.94	ns
T_{ICKQ}	CLK to Q outputs for XC devices(1)	1.03	1.24	1.43	2.11	ns
	CLK to Q outputs for XA and XQ devices	1.38	N/A	1.78	2.11	ns
$T_{RQ_ILOGIC2}$	SR pin to Q outputs	1.81	1.81	2.50	3.05	ns

Notes:

1. For IDDR2 configuration; see TRACE reports for SDR timing.

Table 36: **OLOGIC2 Switching Characteristics**

Symbol	Description	Speed Grade				Units
		-3	-3N	-2	-1L	
Setup/Hold						
T_{ODCK}/T_{OCKD}	D1/D2 pins Setup/Hold with respect to CLK	0.81/ –0.05	0.86/ –0.05	1.18/ 0.00	1.73/ –0.27	ns
T_{OOCECK}/T_{OCKOCE}	OCE pin Setup/Hold with respect to CLK	0.75/ –0.10	0.75/ –0.10	1.01/ –0.05	1.66/ –0.23	ns
T_{OSRCK}/T_{OCKSR}	SR pin Setup/Hold with respect to CLK	0.70/ –0.28	0.79/ –0.28	1.03/ –0.23	1.39/ –0.47	ns
T_{OTCK}/T_{OCKT}	T1/T2 pins Setup/Hold with respect to CLK	0.24/ –0.08	0.56/ –0.06	0.83/ –0.01	0.99/ –0.19	ns
T_{OTCECK}/T_{OCKTCE}	TCE pin Setup/Hold with respect to CLK	0.58/ –0.06	0.72/ –0.06	1.18/ –0.01	1.51/ –0.13	ns
Sequential Delays						
T_{OCKQ}	CLK to OQ/TQ out for XC devices(1)	0.48	0.51	0.74	0.74	ns
	CLK to OQ/TQ out for XA and XQ devices	0.85	N/A	1.16	0.74	ns
$T_{RQ_OLOGIC2}$	SR pin to OQ/TQ out	1.81	1.81	2.50	3.05	ns

Notes:

1. For ODDR2 configuration; see TRACE reports for SDR timing.

Input Serializer/Deserializer Switching Characteristics

Table 37: **ISERDES2 Switching Characteristics**

Symbol	Description	Speed Grade				Units
		-3	-3N	-2	-1L	
Setup/Hold for Control Lines						
$T_{ISCCK_BITSLIP}$/ $T_{ISCKC_BITSLIP}$	BITSLIP pin Setup/Hold with respect to CLKDIV	0.16/ –0.09	0.20/ –0.09	0.31/ –0.09	0.34/ –0.14	ns
T_{ISCCK_CE} / T_{ISCKC_CE}	CE pin Setup/Hold with respect to CLK	0.71/ –0.47	0.71/ –0.42	0.97/ –0.42	1.39/ –0.71	ns
Setup/Hold for Data Lines						
T_{ISDCK_D} /T_{ISCKD_D}	D pin Setup/Hold with respect to CLK	0.24/ –0.15	0.25/ –0.05	0.29/ –0.05	0.09/ –0.05	ns
T_{ISDCK_DDLY} /T_{ISCKD_DDLY}	DDLY pin Setup/Hold with respect to CLK (using IODELAY2)	–0.25/ 0.30	–0.25/ 0.42	–0.25/ 0.56	–0.54/ 0.67	ns
$T_{ISDCK_D_DDR}$ /$T_{ISCKD_D_DDR}$	D pin Setup/Hold with respect to CLK at DDR mode	–0.03/ 0.04	–0.03/ 0.16	–0.03/ 0.18	–0.05/ 0.12	ns
$T_{ISDCK_DDLY_DDR}$/ $T_{ISCKD_DDLY_DDR}$	D pin Setup/Hold with respect to CLK at DDR mode (using IODELAY2)	–0.40/ 0.48	–0.40/ 0.53	–0.40/ 0.71	–0.71/ 0.86	ns
Sequential Delays						
T_{ISCKO_Q}	CLKDIV to out at Q pin	1.30	1.44	2.02	2.22	ns
F_{CLKDIV}	CLKDIV maximum frequency	270	262.5	250	125	MHz

Output Serializer/Deserializer Switching Characteristics

Table 38: **OSERDES2 Switching Characteristics**

Symbol	Description	Speed Grade				Units
		-3	-3N	-2	-1L	
Setup/Hold						
T_{OSDCK_D}/T_{OSCKD_D}	D input Setup/Hold with respect to CLKDIV	–0.03/ 1.02	–0.03/ 1.17	–0.03/ 1.27	–0.02/ 0.23	ns
T_{OSDCK_T}/T_{OSCKD_T}(1)	T input Setup/Hold with respect to CLK	–0.05/ 1.03	–0.05/ 1.13	–0.05/ 1.23	–0.05/ 0.24	ns
T_{OSCCK_OCE}/T_{OSCKC_OCE}	OCE input Setup/Hold with respect to CLK	0.12/ –0.03	0.15/ –0.03	0.24/ –0.03	0.28/ –0.17	ns
T_{OSCCK_TCE}/T_{OSCKC_TCE}	TCE input Setup/Hold with respect to CLK	0.14/ –0.08	0.17/ –0.08	0.27/ –0.08	0.31/ –0.16	ns
Sequential Delays						
T_{OSCKO_OQ}	Clock to out from CLK to OQ	0.94	1.11	1.51	1.89	ns
T_{OSCKO_TQ}	Clock to out from CLK to TQ	0.94	1.11	1.51	1.91	ns
F_{CLKDIV}	CLKDIV maximum frequency	270	262.5	250	125	MHz

Notes:
1. T_{OSDCK_T2}/T_{OSCKD_T2} (T input setup/hold with respect to CLKDIV) are reported as T_{OSDCK_T}/T_{OSCKD_T} in TRACE report.

Input/Output Delay Switching Characteristics

Table 39: **IODELAY2 Switching Characteristics**

Symbol	Description	Speed Grade				Units
		-3	-3N	-2	-1L[3]	
T_{IODCCK_CAL} / T_{IODCKC_CAL}	CAL pin Setup/Hold with respect to CK	0.28/ –0.13	0.33/ –0.13	0.48/ –0.13	N/A	ns
T_{IODCCK_CE} / T_{IODCKC_CE}	CE pin Setup/Hold with respect to CK	0.17/ –0.03	0.17/ –0.03	0.25/ –0.02	N/A	ns
T_{IODCCK_INC}/ T_{IODCKC_INC}	INC pin Setup/Hold with respect to CK	0.10/ 0.02	0.12/ 0.03	0.18/ 0.06	N/A	ns
T_{IODCCK_RST}/ T_{IODCKC_RST}	RST pin Setup/Hold with respect to CK	0.12/ –0.02	0.15/ –0.02	0.22/ –0.01	N/A	ns
T_{TAP1}[2]	Maximum tap 1 delay	8	14	16	N/A	ps
T_{TAP2}	Maximum tap 2 delay	40	66	77	N/A	ps
T_{TAP3}	Maximum tap 3 delay	95	120	140	N/A	ps
T_{TAP4}	Maximum tap 4 delay	108	141	166	N/A	ps
T_{TAP5}	Maximum tap 5 delay	171	194	231	N/A	ps
T_{TAP6}	Maximum tap 6 delay	207	249	292	N/A	ps
T_{TAP7}	Maximum tap 7 delay	212	276	343	N/A	ps
T_{TAP8}	Maximum tap 8 delay	322	341	424	N/A	ps
F_{MINCAL}	Minimum allowed bit rate for calibration in variable mode: VARIABLE_FROM_ZERO, VARIABLE_FROM_HALF_MAX, and DIFF_PHASE_DETECTOR.	188	188	188	N/A	Mb/s
$T_{IODDO_IDATAIN}$	Propagation delay through IODELAY2	Note 1	Note 1	Note 1	Note 3	–
$T_{IODDO_ODATAIN}$	Propagation delay through IODELAY2	Note 1	Note 1	Note 1	Note 3	–

Notes:

1. Delay depends on IODELAY2 tap setting. See TRACE report for actual values.
2. Maximum tap delay = integer (number of taps/8) × T_{TAP8} + T_{TAPn} (where n equals the remainder). For minimum delay consult the TRACE setup and hold report. Minimum delay is typically greater than 30% of the maximum delay. Tap delays can vary by device and overall conditions. See TRACE report for actual values.
3. Spartan-6 -1L devices only support tap 0. See TRACE report for actual values.

CLB Switching Characteristics (SLICEM Only)

Table 40: **CLB Switching Characteristics (SLICEM Only)**

Symbol	Description	Speed Grade				Units
		-3	-3N	-2	-1L	
Combinatorial Delays						
T_{ILO}	An – Dn LUT inputs to A to D outputs	0.21	0.26	0.26	0.46	ns, Max
	An – Dn LUT inputs through F7AMUX/F7BMUX to AMUX/CMUX output	0.37	0.43	0.43	0.77	ns, Max
T_{OPAB}	An – Dn LUT inputs through F7AMUX or F7BMUX and F8MUX to BMUX output	0.37	0.46	0.46	0.84	ns, Max
T_{ITO}	An – Dn LUT inputs through latch to AQ – DQ outputs	0.82	0.95	0.95	1.64	ns, Max
T_{TITO_LOGIC}	An – Dn LUT inputs to AQ – DQ outputs (latch as logic)	0.82	0.95	0.95	1.64	ns, Max
T_{OPCYA}	An LUT inputs to COUT output	0.38	0.48	0.48	0.69	ns, Max
T_{OPCYB}	Bn LUT inputs to COUT output	0.38	0.49	0.49	0.71	ns, Max
T_{OPCYC}	Cn LUT inputs to COUT output	0.28	0.33	0.33	0.55	ns, Max
T_{OPCYD}	Dn LUT inputs to COUT output	0.28	0.35	0.35	0.52	ns, Max
T_{AXCY}	AX input to COUT output	0.21	0.26	0.26	0.36	ns, Max
T_{BXCY}	BX input to COUT output	0.13	0.16	0.16	0.18	ns, Max
T_{CXCY}	CX input to COUT output	0.10	0.12	0.12	0.09	ns, Max
T_{DXCY}	DX input to COUT output	0.09	0.11	0.11	0.09	ns, Max
T_{BYP}	CIN input to COUT output	0.08	0.10	0.10	0.06	ns, Max
T_{CINA}	CIN input to AMUX output	0.21	0.22	0.22	0.47	ns, Max
T_{CINB}	CIN input to BMUX output	0.30	0.31	0.31	0.57	ns, Max
T_{CINC}	CIN input to CMUX output	0.29	0.31	0.31	0.58	ns, Max
T_{CIND}	CIN input to DMUX output	0.31	0.32	0.32	0.68	ns, Max
Sequential Delays						
T_{CKO}	Clock to AQ – DQ outputs	0.45	0.53	0.53	0.74	ns, Max
Setup and Hold Times of CLB Flip-Flops Before/After Clock CLK						
T_{DICK}/T_{CKDI}	AX – DX input to CLK on A – D flip-flops	0.42/ 0.28	0.47/ 0.39	0.47/ 0.39	0.90/ 0.56	ns, Min
T_{CECK}/T_{CKCE}	CE input to CLK on A – D flip-flops	0.31/ –0.07	0.37/ –0.07	0.37/ –0.07	0.59/ –0.27	ns, Min
T_{SRCK}/T_{CKSR}	SR input to CLK on A – D flip-flops for XC devices	0.41/ 0.02	0.42/ 0.02	0.42/ 0.02	0.68/ –0.29	ns, Min
	SR input to CLK on A – D flip-flops for XA and XQ devices	0.41/ 0.02	N/A	0.44/ 0.02	0.68/ –0.29	ns, Min
T_{CINCK}/T_{CKCIN}	CIN input to CLK on A – D flip-flops	0.31/ –0.17	0.31/ –0.13	0.31/ –0.13	0.81/ –0.42	ns, Min
Set/Reset						
T_{RPW}	SR input minimum pulse width	0.41	0.48	0.48	1.37	ns, Min
T_{RQ}	Delay from SR input to AQ – DQ flip-flops	0.60	0.70	0.70	0.88	ns, Max
T_{CEO}	Delay from CE input to AQ – DQ flip-flops	0.60	0.65	0.65	0.90	ns, Max
F_{TOG}	Toggle frequency (for export control)	862	806	667	500	MHz

CLB Distributed RAM Switching Characteristics (SLICEM Only)

Table 41: **CLB Distributed RAM Switching Characteristics (SLICEM Only)**

Symbol	Description	Speed Grade				Units
		-3	-3N	-2	-1L	
Sequential Delays						
T_{SHCKO}	Clock to A – D outputs	1.26	1.55	1.55	2.35	ns, Max
	Clock to A – D outputs (direct output path)	0.96	1.20	1.20	1.87	ns, Max
Setup and Hold Times Before/After Clock CLK						
T_{DS}/T_{DH}	AX – DX or AI – DI inputs to CLK	0.59/ 0.17	0.73/ 0.22	0.73/ 0.22	1.17/ 0.33	ns, Min
T_{AS}/T_{AH}	Address An inputs to clock for XC devices	0.28/ 0.35	0.32/ 0.42	0.32/ 0.42	0.26/ 0.71	ns, Min
	Address An inputs to clock for XA and XQ devices	0.28/ 0.51	N/A	0.32/ 0.51	0.26/ 0.71	ns, Min
T_{WS}/T_{WH}	WE input to clock	0.31/ –0.08	0.37/ –0.08	0.37/ –0.08	0.59/ –0.27	ns, Min
T_{CECK}/T_{CKCE}	CE input to CLK	0.31/ –0.08	0.37/ –0.08	0.37/ –0.08	0.59/ –0.27	ns, Min

CLB Shift Register Switching Characteristics (SLICEM Only)

Table 42: **CLB Shift Register Switching Characteristics**

Symbol	Description	Speed Grade				Units
		-3	-3N	-2	-1L	
Sequential Delays						
T_{REG}	Clock to A – D outputs	1.35	1.78	1.78	2.74	ns, Max
	Clock to A – D outputs (direct output path)	1.24	1.65	1.65	2.48	ns, Max
Setup and Hold Times Before/After Clock CLK						
T_{WS}/T_{WH}	WE input to CLK	0.20/ –0.07	0.24/ –0.07	0.24/ –0.07	0.29/ –0.27	ns, Min
T_{CECK}/T_{CKCE}	CE input to CLK for XC devices	0.30/ 0.30	0.30/ 0.38	0.30/ 0.38	0.82/ –0.41	ns, Min
	CE input to CLK for XA and XQ devices	0.32/ 0.30	N/A	0.40/ 0.38	0.82/ –0.41	ns, Min
T_{DS}/T_{DH}	AX – DX or AI – DI inputs to CLK	0.07/ 0.11	0.09/ 0.14	0.09/ 0.14	0.11/ 0.23	ns, Min

Block RAM Switching Characteristics

Table 43: **Block RAM Switching Characteristics**

Symbol	Description	Speed Grade				Units
		-3	-3N	-2	-1L	
Block RAM Clock to Out Delays						
T_{RCKO_DO}	Clock CLK to DOUT output (without output register)(1)	1.85	2.10	2.10	3.50	ns, Max
$T_{RCKO_DO_REG}$	Clock CLK to DOUT output (with output register)(2)	1.60	1.75	1.75	2.30	ns, Max
Setup and Hold Times Before/After Clock CLK						
$T_{RCCK_ADDR}/T_{RCKC_ADDR}$	ADDR inputs for XC devices(3)	0.35/ 0.10	0.40/ 0.12	0.40/ 0.12	0.50/ 0.15	ns, Min
	ADDR inputs for XA and XQ devices(3)	0.35/ 0.17	N/A	0.40/ 0.17	0.50/ 0.15	ns, Min
T_{RDCK_DI}/T_{RCKD_DI}	DIN inputs(4)	0.30/ 0.10	0.30/ 0.10	0.30/ 0.10	0.40/ 0.15	ns, Min
T_{RCCK_EN}/T_{RCKC_EN}	Block RAM Enable (EN) input	0.22/ 0.05	0.25/ 0.06	0.25/ 0.06	0.44/ 0.10	ns, Min
$T_{RCCK_REGCE}/T_{RCKC_REGCE}$	CE input of output register	0.20/ 0.10	0.20/ 0.10	0.20/ 0.10	0.28/ 0.15	ns, Min
T_{RCCK_WE}/T_{RCKC_WE}	Write Enable (WE) input	0.25/ 0.10	0.33/ 0.10	0.33/ 0.10	0.28/ 0.15	ns, Min
Maximum Frequency						
F_{MAX}	Block RAM in all modes	320	280	280	150	MHz

Notes:
1. T_{RCKO_DO} includes T_{RCKO_DOA} and T_{RCKO_DOPA} as well as the B port equivalent timing parameters.
2. $T_{RCKO_DO_REG}$ includes $T_{RCKO_DOA_REG}$ and $T_{RCKO_DOPA_REG}$ as well as the B port equivalent timing parameters.
3. The ADDR setup and hold must be met when EN is asserted (even when WE is deasserted). Otherwise, block RAM data corruption is possible.
4. T_{RDCK_DI} includes both A and B inputs as well as the parity inputs of A and B.

DSP48A1 Switching Characteristics

Table 44: **DSP48A1 Switching Characteristics**

Symbol	Description	Pre-adder	Multiplier	Post-adder	Speed Grade				Units
					-3	-3N	-2	-1L	
Setup and Hold Times of Data/Control Pins to the Input Register Clock									
$T_{DSPDCK_A_A1REG}$/ $T_{DSPCKD_A_A1REG}$	A input to A1 register CLK	N/A	N/A	N/A	0.15/ 0.09	0.17/ 0.09	0.17/ 0.09	0.32/ 0.09	ns
$T_{DSPDCK_D_B1REG}$/ $T_{DSPCKD_D_B1REG}$	D input to B1 register CLK	Yes	N/A	N/A	1.90/ –0.07	1.95/ –0.07	1.95/ –0.07	2.82/ –0.07	ns
$T_{DSPDCK_C_CREG}$/ $T_{DSPCKD_C_CREG}$	C input to C register CLK for XC devices	N/A	N/A	N/A	0.11/ 0.15	0.13/ 0.15	0.13/ 0.15	0.24/ 0.09	ns
	C input to C register CLK for XA and XQ devices				0.11/ 0.19	N/A	0.13/ 0.23	0.24/ 0.09	
$T_{DSPDCK_D_DREG}$/ $T_{DSPCKD_D_DREG}$	D input to D register CLK for XC devices	N/A	N/A	N/A	0.09/ 0.15	0.10/ 0.15	0.10/ 0.15	0.19/ 0.12	ns
	D input to D register CLK for XA and XQ devices				0.09/ 0.23	N/A	0.10/ 0.27	0.19/ 0.12	
$T_{DSPDCK_OPMODE_B1REG}$/ $T_{DSPCKD_OPMODE_B1REG}$	OPMODE input to B1 register CLK	Yes	N/A	N/A	1.97/ 0.01	2.00/ 0.01	2.00/ 0.01	2.85/ 0.01	ns
$T_{DSPDCK_OPMODE_OPMODEREG}$/ $T_{DSPCKD_OPMODE_OPMODEREG}$	OPMODE input to OPMODE register CLK for XC devices	N/A	N/A	N/A	0.18/ 0.12	0.21/ 0.12	0.21/ 0.12	0.40/ 0.12	ns
	OPMODE input to OPMODE register CLK for XA and XQ devices				0.18/ 0.16	N/A	0.21/ 0.22	0.40/ 0.12	
Setup and Hold Times of Data Pins to the Pipeline Register Clock									
$T_{DSPDCK_A_MREG}$/ $T_{DSPCKD_A_MREG}$	A input to M register CLK	N/A	Yes	N/A	3.06/ –0.40	3.51/ –0.40	3.51/ –0.40	3.97/ –0.40	ns
$T_{DSPDCK_B_MREG}$/ $T_{DSPCKD_B_MREG}$	B input to M register CLK	Yes	Yes	N/A	3.96/ –0.68	4.58/ –0.68	4.58/ –0.68	7.00/ –0.68	ns
$T_{DSPDCK_D_MREG}$/ $T_{DSPCKD_D_MREG}$	D input to M register CLK	Yes	Yes	N/A	4.23/ –0.56	4.80/ –0.56	4.80/ –0.56	6.84/ –0.56	ns
$T_{DSPDCK_OPMODE_MREG}$/ $T_{DSPCKD_OPMODE_MREG}$	OPMODE to M register CLK	Yes	Yes	N/A	4.18/ –0.48	4.80/ –0.48	4.80/ –0.48	6.88/ –0.48	ns
		No	Yes	N/A	2.37/ –0.48	2.70/ –0.48	2.70/ –0.48	4.28/ –0.48	ns
Setup and Hold Times of Data/Control Pins to the Output Register Clock									
$T_{DSPDCK_A_PREG}$/ $T_{DSPCKD_A_PREG}$	A input to P register CLK	N/A	Yes	Yes	4.32/ –0.76	5.06/ –0.76	5.06/ –0.76	7.52/ –0.76	ns
$T_{DSPDCK_B_PREG}$/ $T_{DSPCKD_B_PREG}$	B input to P register CLK	Yes	Yes	Yes	5.87/ –0.59	6.87/ –0.59	6.87/ –0.59	10.55/ –0.59	ns
		No	Yes	Yes	4.14/ –0.93	4.68/ –0.93	4.68/ –0.93	8.12/ –0.93	ns
$T_{DSPDCK_C_PREG}$/ $T_{DSPCKD_C_PREG}$	C input to P register CLK	N/A	N/A	Yes	2.20/ –0.23	2.25/ –0.23	2.25/ –0.23	3.27/ –0.23	ns
$T_{DSPDCK_D_PREG}$/ $T_{DSPCKD_D_PREG}$	D input to P register CLK	Yes	Yes	Yes	5.90/ –0.92	6.91/ –0.92	6.91/ –0.92	10.39/ –0.92	ns

Table 44: **DSP48A1 Switching Characteristics *(Cont'd)***

Symbol	Description	Pre-adder	Multiplier	Post-adder	Speed Grade				Units
					-3	-3N	-2	-1L	
$T_{DSPDCK_OPMODE_PREG}$/ $T_{DSPCKD_OPMODE_PREG}$	OPMODE input to P register CLK	Yes	Yes	Yes	6.21/ –0.84	7.27/ –0.84	7.27/ –0.84	10.43/ –0.84	ns
		No	Yes	Yes	1.69/ –0.87	1.98/ –0.87	1.98/ –0.87	3.62/ –0.87	ns
		No	No	Yes	2.09/ –0.22	2.30/ –0.22	2.30/ –0.22	3.79/ –0.22	ns
Clock to Out from Output Register Clock to Output Pin									
$T_{DSPCKO_P_PREG}$	CLK (PREG) to P output	N/A	N/A	N/A	1.20	1.34	1.34	1.90	ns
Clock to Out from Pipeline Register Clock to Output Pins									
$T_{DSPCKO_P_MREG}$	CLK (MREG) to P output	N/A	N/A	Yes	3.38	3.95	3.95	5.83	ns
Clock to Out from Input Register Clock to Output Pins									
$T_{DSPCKO_P_A1REG}$	CLK (A1REG) to P output	N/A	Yes	Yes	5.02	5.87	5.87	9.65	ns
$T_{DSPCKO_P_B1REG}$	CLK (B1REG) to P output	N/A	Yes	Yes	5.02	5.87	5.87	9.63	ns
$T_{DSPCKO_P_CREG}$	CLK (CREG) to P output	N/A	N/A	Yes	3.12	3.64	3.64	5.24	ns
$T_{DSPCKO_P_DREG}$	CLK (DREG) to P output	Yes	Yes	Yes	6.77	7.92	7.92	12.53	ns
Combinatorial Delays from Input Pins to Output Pins									
$T_{DSPDO_A_P}$	A input to P output	N/A	No	Yes	2.85	3.33	3.33	4.73	ns
		N/A	Yes	No(2)	3.35	3.93	3.93	6.74	ns
		N/A	Yes	Yes	4.56	5.22	5.22	8.94	ns
$T_{DSPDO_B_P}$	B input to P output	Yes	No	No(2)	3.22	3.76	3.76	5.55	ns
		Yes	Yes	No(2)	6.01	6.54	6.54	9.76	ns
		Yes	Yes	Yes	6.27	7.34	7.34	11.96	ns
$T_{DSPDO_C_P}$	C input to P output	N/A	N/A	Yes	2.69	3.15	3.15	4.68	ns
$T_{DSPDO_D_P}$	D input to P output	Yes	Yes	Yes	6.31	7.38	7.38	11.81	ns
$T_{DSPDO_OPMODE_P}$	OPMODE input to P output	Yes	Yes	Yes	6.43	7.52	7.52	11.84	ns
		No	Yes	Yes	4.84	5.66	5.66	9.25	ns
		No	No	Yes	3.11	3.49	3.49	5.03	ns
Maximum Frequency									
F_{MAX}	All registers used	Yes	Yes	Yes	390	333	333	213	MHz

Notes:

1. A Yes signifies that the component is in the path. A No signifies that the component is being bypassed. N/A signifies not applicable because no path exists.
2. Implemented in the post-adder by adding to zero.

Table 45: **Device DNA Interface Port Switching Characteristics**

Symbol	Description	Speed Grade				Units
		-3	-3N	-2	-1L	
T_{DNASSU} (T_{DNADCK_SHIFT})	Setup time on SHIFT before the rising edge of CLK	7				ns, Min
T_{DNASH} (T_{DNACKD_SHIFT})	Hold time on SHIFT after the rising edge of CLK	1				ns, Min
T_{DNADSU} (T_{DNADCK_DIN})	Setup time on DIN before the rising edge of CLK	7				ns, Min
T_{DNADH} (T_{DNACKD_DIN})	Hold time on DIN after the rising edge of CLK	1				ns, Min
T_{DNARSU} (T_{DNADCK_READ})	Setup time on READ before the rising edge of CLK	7				ns, Min
		1,000				ns, Max
T_{DNARH} (T_{DNACKD_READ})	Hold time on READ after the rising edge of CLK	1				ns, Min
$T_{DNADCKO}$ (T_{DNACKO_DOUT})	Clock-to-output delay on DOUT after rising edge of CLK	0.5				ns, Min
		6				ns, Max
$T_{DNACLKF}$[(2)]	CLK frequency	2				MHz, Max
$T_{DNACLKL}$	CLK Low time	50				ns, Min
$T_{DNACLKH}$	CLK High time	50				ns, Min

Notes:
1. The minimum READ pulse width is 8 ns, the maximum READ pulse width is 1 µs.
2. Also applies to TCK when reading DNA through the boundary-scan port.

Table 46: **Suspend Mode Switching Characteristics**

Symbol	Description	Min	Max	Units
Entering Suspend Mode				
$T_{SUSPENDHIGH_AWAKE}$	Rising edge of SUSPEND pin to falling edge of AWAKE pin without glitch filter	2.5	14	ns
$T_{SUSPENDFILTER}$	Adjustment to SUSPEND pin rising edge parameters when glitch filter enabled	31	430	ns
$T_{SUSPEND_GWE}$	Rising edge of SUSPEND pin until FPGA output pins drive their defined SUSPEND constraint behavior (without glitch filter)	–	15	ns
$T_{SUSPEND_GTS}$	Rising edge of SUSPEND pin to write-protect lock on all writable clocked elements (without glitch filter)	–	15	ns
$T_{SUSPEND_DISABLE}$	Rising edge of the SUSPEND pin to FPGA input pins and interconnect disabled (without glitch filter)	–	1500	ns
Exiting Suspend Mode				
$T_{SUSPENDLOW_AWAKE}$	Falling edge of the SUSPEND pin to rising edge of the AWAKE pin. Does not include DCM or PLL lock time.	7	75	µs
$T_{SUSPEND_ENABLE}$	Falling edge of the SUSPEND pin to FPGA input pins and interconnect re-enabled	7	41	µs
T_{AWAKE_GWE1}	Rising edge of the AWAKE pin until write-protect lock released on all writable clocked elements, using **sw_clk:InternalClock** and **sw_gwe_cycle:1**.	–	80	ns
T_{AWAKE_GWE512}	Rising edge of the AWAKE pin until write-protect lock released on all writable clocked elements, using **sw_clk:InternalClock** and **sw_gwe_cycle:512**.	–	20.5	µs
T_{AWAKE_GTS1}	Rising edge of the AWAKE pin until outputs return to the behavior described in the FPGA application, using **sw_clk:InternalClock** and **sw_gts_cycle:1**.	–	80	ns
T_{AWAKE_GTS512}	Rising edge of the AWAKE pin until outputs return to the behavior described in the FPGA application, using **sw_clk:InternalClock** and **sw_gts_cycle:512**.	–	20.5	µs
T_{SCP_AWAKE}	Rising edge of SCP pins to rising edge of AWAKE pin	7	75	µs

Configuration Switching Characteristics

Table 47: **Configuration Switching Characteristics(1)**

Symbol	Description	Speed Grade				Units
		-3	-3N	-2	-1L	
Power-up Timing Characteristics						
T_{PL}(2)	PROGRAM_B Latency	4	4	4	5	ms, Max
T_{POR}(2)	Power-on reset (50 ms ramp time)(3)	5/30	5/34	5/40	5/40	ms, Min/Max
	Power-on reset (10 ms ramp time)	5/25	5/29	5/35	5/40	ms, Min/Max
$T_{PROGRAM}$	PROGRAM_B Pulse Width	500	500	500	500	ns, Min
Slave Serial Mode Programming Switching						
T_{DCCK}/T_{CCKD}	DIN Setup/Hold, slave mode	6.0/1.0	6.0/1.0	6.0/1.0	8.0/2.0	ns, Min
T_{CCO}	CCLK to DOUT	12	12	12	17	ns, Max
F_{SCCK}	Slave mode external CCLK	80	80	80	50	MHz, Max
Slave SelectMAP Mode Programming Switching						
T_{SMDCCK}/T_{SMCCKD}	SelectMAP Data Setup/Hold	6.0/1.0	6.0/1.0	6.0/1.0	8.0/2.0	ns, Min
$T_{SMCSCCK}/T_{SMCCKCS}$	CSI_B Setup/Hold	7.0/0.0	7.0/0.0	7.0/0.0	9.0/2.0	ns, Min
T_{SMWCCK}/T_{SMCCKW}	RDWR_B Setup/Hold	17.0/1.0	17.0/1.0	17.0/1.0	27.0/2.0	ns, Min
$T_{SMCKCSO}$	CSO_B clock to out	16	16	16	26	ns, Max
T_{SMCO}	CCLK to DATA out in readback	13	13	13	25	ns, Max
T_{SMCKBY}	CCLK to BUSY out in readback	12	12	12	17	ns, Max
F_{SMCCK}	Maximum CCLK frequency (LX4, LX9, LX16, LX25, LX25T, LX45, LX45T, LX75, and LX75T only)	50	50	50	25	MHz, Max
	Maximum CCLK frequency (LX100 and LX100T in x8 mode, LX150, and LX150T only)	40	40	40	20	MHz, Max
	Maximum CCLK frequency (LX100 and LX100T in x16 mode only)	35	35	35	20	MHz, Max
F_{RBCCK}	Maximum Readback CCLK frequency, including block RAM (LX4, LX9, LX16, LX25, LX25T, LX45, LX45T, LX75, and LX75T only)	20	20	20	4	MHz, Max
	Maximum Readback CCLK frequency, ignoring block RAM (POST_CRC) (LX4, LX9, LX16, LX25, LX25T, LX45, LX45T, LX75, and LX75T only)	50	50	50	30	MHz, Max
	Maximum Readback CCLK frequency, including block RAM (LX100, LX100T, LX150, and LX150T only)	12	12	12	4	MHz, Max
	Maximum Readback CCLK frequency, ignoring block RAM (POST_CRC) (LX100, LX100T, LX150, and LX150T only)	35	35	35	20	MHz, Max
Boundary-Scan Port Timing Specifications						
T_{TAPTCK}	TMS and TDI Setup time before TCK	10	10	10	17	ns, Min
T_{TCKTAP}	TMS and TDI Hold time after TCK	5.5	5.5	5.5	5.5	ns, Min
T_{TCKTDO}	TCK falling edge to TDO output valid	6.5	6.5	6.5	8	ns, Max
T_{TCKH}	TCK clock minimum High time	12	12	12	21	ns, Min
T_{TCKL}	TCK clock minimum Low time	12	12	12	21	ns, Min
F_{TCK}	Maximum configuration TCK clock frequency	33	33	33	18	MHz, Max
F_{TCKB}	Maximum boundary-scan TCK clock frequency	33	33	33	18	MHz, Max
F_{TCKAES}	Maximum AES key TCK clock frequency	2	2	2	2	MHz, Max

Table 47: **Configuration Switching Characteristics[1] *(Cont'd)***

Symbol	Description	Speed Grade				Units
		-3	-3N	-2	-1L	
BPI Master Flash Mode Programming Switching[4]						
T_{BPICCO}[5]	A[25:0], FCS_B, FOE_B, FWE_B, LDC outputs valid after CCLK falling edge	15	15	15	20	ns, Max
$T_{BPIICCK}$	Master BPI CCLK (output) delay	10/100	10/100	10/100	10/130	µs, Min/Max
T_{BPIDCC}/T_{BPICCD}	Setup/Hold on D[15:0] data input pins	5.0/1.0	5.0/1.0	5.0/1.0	6.0/2.0	ns, Min
SPI Master Flash Mode Programming Switching[6]						
$T_{SPIDCC}/T_{SPIDCCD}$	DIN, MISO0, MISO1, MISO2, MISO3, Setup/Hold before/after the rising CCLK edge	5.0/1.0	5.0/1.0	5.0/1.0	7.0/1.0	ns, Min
$T_{SPIICCK}$	Master SPI CCLK (output) delay	0.4/7.0	0.4/7.0	0.4/7.0	0.4/10.0	µs, Min/Max
T_{SPICCM}	MOSI clock to out	13	13	13	19	ns, Max
$T_{SPICCFC}$	CSO_B clock to out	16	16	16	26	ns, Max
CCLK Output (Master Modes)						
T_{MCCKL}	Master CCLK clock duty cycle Low	40/60				%, Min/Max
T_{MCCKH}	Master CCLK clock duty cycle High	40/60				%, Min/Max
F_{MCCK}	Maximum frequency, serial mode (Master Serial/SPI) All devices	40	40	40	30	MHz, Max
	Maximum frequency, parallel mode (Master SelectMAP/BPI) LX9, LX16, LX25, LX25T, LX45, LX45T, LX75, and LX75T	40	40	40	25	MHz, Max
	Maximum frequency, parallel mode (Master SelectMAP/BPI) LX100 and LX100T in x8 mode, LX150, and LX150T	40	40	40	20	MHz, Max
	Maximum frequency, parallel mode (Master SelectMAP/BPI) LX100 and LX100T in x16 mode	35	35	35	20	MHz, Max
$F_{MCCKTOL}$	Frequency Tolerance, master mode	±50	±50	±50	±50	%
CCLK Input (Slave Modes)						
T_{SCCKL}	Slave CCLK clock minimum Low time	5	5	5	8	ns, Min
T_{SCCKH}	Slave CCLK clock minimum High time	5	5	5	8	ns, Min
USERCCLK Input						
$T_{USERCCLKL}$	USERCCLK clock minimum Low time	12	12	12	16	ns, Min
$T_{USERCCLKH}$	USERCCLK clock minimum High time	12	12	12	16	ns, Min
$F_{USERCCLK}$	Maximum USERCCLK frequency	40	40	40	30	MHz, Max

Notes:

1. Maximum frequency and setup/hold timing parameters are for 3.3V and 2.5V configuration voltages.
2. To support longer delays in configuration, use the design solutions described in UG380: *Spartan-6 FPGA Configuration User Guide*.
3. Table 6 specifies the power supply ramp time.
4. BPI mode is not supported in:
   - LX4, LX25, or LX25T devices
   - LX9 devices in the TQG144 package
   - LX9 or LX16 devices in the CPG196 package.
5. Only during configuration, the last edge is determined by a weak pull-up/pull-down resistor in the I/O.
6. Defense-grade Spartan-6Q -2Q devices configure in single default SPI Master (x1) mode at T_j = –55°C. During operation and when using all other configuration functions, the minimum operating temperature is –40°C.

Clock Buffers and Networks

Table 48: **Global Clock Switching Characteristics (BUFGMUX)**

Symbol	Description	Devices	Speed Grade				Units
			-3	-3N	-2	-1L	
T_{GSI} (T_{GSI0}, T_{GSI1})	S pin Setup to I0/I1 inputs	LX devices	0.25	0.31	0.48	0.48	ns
		LXT devices	0.25	0.31	0.48	N/A	ns
T_{GIO} (T_{GI0O}, T_{GI1O})	BUFGMUX delay from I0/I1 to O	LX devices	0.21	0.21	0.21	0.21	ns
		LXT devices	0.21	0.21	0.21	N/A	ns
Maximum Frequency							
F_{MAX}	Global clock tree (BUFGMUX)(1)	LX devices	400	400	375	250	MHz
		LXT devices	400	400	375	N/A	MHz

Notes:

1. The BUFGMUX F_{MAX} values also apply to BUFH.

Table 49: **Input/Output Clock Switching Characteristics (BUFIO2)**

Symbol	Description	Devices	Speed Grade				Units
			-3	-3N	-2	-1L	
T_{BUFCKO_O}(1)	Clock to out delay from I to O	LX devices	0.67	0.82	1.09	1.50	ns
		LXT devices	0.67	0.82	1.09	N/A	ns
Maximum Frequency							
F_{MAX}	I/O clock tree (BUFIO2)	LX devices	540	525	500	300	MHz
		LXT devices	540	525	500	N/A	MHz

Notes:

1. T_{BUFCKO_O} reflects the longest delay of T_{BUFCKO_IOCLK}, T_{BUFCKO_DIVCLK}, and $T_{BUFCKO_SSTROBE}$. See TRACE reports for specific values.

Table 50: **Input/Output Clock Switching Characteristics (BUFIO2FB)**

Symbol	Description	Devices	Speed Grade				Units
			-3	-3N	-2	-1L	
Maximum Frequency							
F_{MAX}	I/O clock tree (BUFIO2FB)	LX devices	1080	1050	950	500	MHz
		LXT devices	1080	1050	950	N/A	MHz

Table 51: **Input/Output Clock Switching Characteristics (BUFPLL)**

Symbol	Description	Devices	Speed Grade				Units
			-3	-3N	-2	-1L	
Maximum Frequency							
F_{MAX}	BUFPLL clock tree (BUFPLL)	LX devices	1080	1050	950	500	MHz
		LXT devices	1080	1050	950	N/A	MHz

PLL Switching Characteristics

Table 52: **PLL Specification**

Symbol	Description	Device[1]	Speed Grade				Units
			-3	-3N	-2	-1L	
F_{INMAX}	Maximum Input Clock Frequency from I/O Clock (BUFIO2)	LX devices	540	525	450	300	MHz
		LXT devices	540	525	450	N/A	MHz
	Maximum Input Clock Frequency from Global Clock Buffer (BUFGMUX)	LX devices	400	400	375	250	MHz
		LXT devices	400	400	375	N/A	MHz
F_{INMIN}	Minimum Input Clock Frequency	LX devices	19	19	19	19	MHz
		LXT devices	19	19	19	N/A	MHz
$F_{INJITTER}$	Maximum Input Clock Period Jitter: 19–200 MHz	All	1 ns Maximum				
	Maximum Input Clock Period Jitter: > 200 MHz	All	<20% of clock input period Maximum				
F_{INDUTY}	Allowable Input Duty Cycle: 19—199 MHz	All	25/75				%
	Allowable Input Duty Cycle: 200—299 MHz	All	35/65				%
	Allowable Input Duty Cycle: > 300 MHz	All	45/55				%
F_{VCOMIN}	Minimum PLL VCO Frequency	LX devices	400	400	400	400	MHz
		LXT devices	400	400	400	N/A	MHz
F_{VCOMAX}	Maximum PLL VCO Frequency	LX devices	1080	1050	1000	1000	MHz
		LXT devices	1080	1050	1000	N/A	MHz
$F_{BANDWIDTH}$	Low PLL Bandwidth at Typical[3]	All	1	1	1	1	MHz
	High PLL Bandwidth at Typical[3]	All	4	4	4	4	MHz
$T_{STAPHAOFFSET}$	Static Phase Offset of the PLL Outputs	All	0.12	0.12	0.12	0.15	ns
$T_{OUTJITTER}$	PLL Output Jitter[3]	All	Note 2				
$T_{OUTDUTY}$	PLL Output Clock Duty Cycle Precision[4]	All	0.15	0.15	0.20	0.25	ns
$T_{LOCKMAX}$	PLL Maximum Lock Time	All	100	100	100	100	µs
F_{OUTMAX}	PLL Maximum Output Frequency for BUFGMUX	LX devices	400	400	375	250	MHz
		LXT devices	400	400	375	N/A	MHz
	PLL Maximum Output Frequency for BUFPLL	LX devices	1080	1050	950	500	MHz
		LXT devices	1080	1050	950	N/A	MHz
F_{OUTMIN}	PLL Minimum Output Frequency[5]	All	3.125	3.125	3.125	3.125	MHz
$T_{EXTFDVAR}$	External Clock Feedback Variation: 19–200 MHz	All	1 ns Maximum				
	External Clock Feedback Variation: > 200 MHz	All	< 20% of clock input period Maximum				
$RST_{MINPULSE}$	Minimum Reset Pulse Width	All	5	5	5	5	ns
F_{PFDMAX}[6]	Maximum Frequency at the Phase Frequency Detector	LX devices	500	500	400	300	MHz
		LXT devices	500	500	400	N/A	MHz
F_{PFDMIN}	Minimum Frequency at the Phase Frequency Detector	LX devices	19	19	19	19	MHz
		LXT devices	19	19	19	N/A	MHz

Table 52: **PLL Specification *(Cont'd)***

Symbol	Description	Device[1]	Speed Grade				Units
			-3	-3N	-2	-1L	
$T_{FBDELAY}$	Maximum Delay in the Feedback Path	All	3 ns Max or one CLKIN cycle				

Notes:

1. LXT devices are not available with a -1L speed grade.
2. Values for this parameter are available in the Clocking Wizard.
3. The PLL does not filter typical spread spectrum input clocks because they are usually far below the bandwidth filter frequencies.
4. Includes global clock buffer.
5. Calculated as $F_{VCO}/128$ assuming output duty cycle is 50%.
6. When using CLK_FEEDBACK = CLKOUT0 with BUFIO2 feedback, the feedback frequency will be higher than the phase frequency detector frequency. $F_{PFDMAX} = F_{CLKFB}$ / CLKFBOUT_MULT

DCM Switching Characteristics

Table 53: **Operating Frequency Ranges and Conditions for the Delay-Locked Loop (DLL)(1)**

Symbol	Description	Speed Grade								Units
		-3		-3N		-2		-1L		
		Min	Max	Min	Max	Min	Max	Min	Max	
Input Frequency Ranges										
CLKIN_FREQ_DLL	Frequency of the CLKIN clock input when the CLKDV output is not used.	5(2)	280(3)	5(2)	280(3)	5(2)	250(3)	5(2)	175(3)	MHz
	Frequency of the CLKIN clock input when using the CLKDV output.	5(2)	280(3)	5(2)	280(3)	5(2)	250(3)	5(2)	133(3)	MHz
Input Pulse Requirements										
CLKIN_PULSE	CLKIN pulse width as a percentage of the CLKIN period for CLKIN_FREQ_DLL < 150 MHz	40	60	40	60	40	60	40	60	%
	CLKIN pulse width as a percentage of the CLKIN period for CLKIN_FREQ_DLL > 150 MHz	45	55	45	55	45	55	45	55	%
Input Clock Jitter Tolerance and Delay Path Variation(4)										
CLKIN_CYC_JITT_DLL_LF	Cycle-to-cycle jitter at the CLKIN input for CLKIN_FREQ_DLL < 150 MHz	–	±300	–	±300	–	±300	–	±300	ps
CLKIN_CYC_JITT_DLL_HF	Cycle-to-cycle jitter at the CLKIN input for CLKIN_FREQ_DLL > 150 MHz.	–	±150	–	±150	–	±150	–	±150	ps
CLKIN_PER_JITT_DLL	Period jitter at the CLKIN input.	–	±1	–	±1	–	±1	–	±1	ns
CLKFB_DELAY_VAR_EXT	Allowable variation of the off-chip feedback delay from the DCM output to the CLKFB input.	–	±1	–	±1	–	±1	–	±1	ns

Notes:
1. DLL specifications apply when using any of the DLL outputs: CLK0, CLK90, CLK180, CLK270, CLK2X, CLK2X180, or CLKDV.
2. When operating independently of the DLL, the DFS supports lower CLKIN_FREQ_DLL frequencies. See Table 55.
3. The CLKIN_DIVIDE_BY_2 attribute increases the effective input frequency range. When set to TRUE, the input clock frequency is divided by two as it enters the DCM. Input clock frequencies for the clock buffer being used can be increased up to the F_{MAX} (see Table 48 and Table 49 for BUFGMUX and BUFIO2 limits). When used with CLK_FEEDBACK=2X, the input clock frequency matches the frequency for CLK2X, and is limited to CLKOUT_FREQ_2X.
4. CLKIN_FREQ_DLL input jitter beyond these limits can cause the DCM to lose LOCK, indicated by the LOCKED output deasserting. The user must then reset the DCM.
5. When using both DCMs in a CMT, both DCMs must be LOCKED.

Table 54: **Switching Characteristics for the Delay-Locked Loop (DLL)[1]**

Symbol	Description	Speed Grade								Units
		-3		-3N		-2		-1L		
		Min	Max	Min	Max	Min	Max	Min	Max	
Output Frequency Ranges										
CLKOUT_FREQ_CLK0	Frequency for the CLK0 and CLK180 outputs.	5	280	5	280	5	250	5	175	MHz
CLKOUT_FREQ_CLK90	Frequency for the CLK90 and CLK270 outputs.	5	200	5	200	5	200	5	175	MHz
CLKOUT_FREQ_2X	Frequency for the CLK2X and CLK2X180 outputs.	10	375	10	375	10	334	10	250	MHz
CLKOUT_FREQ_DV	Frequency for the CLKDV output.	0.3125	186	0.3125	186	0.3125	166	0.3125	88.6	MHz
Output Clock Jitter[2][3][4]										
CLKOUT_PER_JITT_0	Period jitter at the CLK0 output.	–	±100	–	±100	–	±100	–	±100	ps
CLKOUT_PER_JITT_90	Period jitter at the CLK90 output.	–	±150	–	±150	–	±150	–	±150	ps
CLKOUT_PER_JITT_180	Period jitter at the CLK180 output.	–	±150	–	±150	–	±150	–	±150	ps
CLKOUT_PER_JITT_270	Period jitter at the CLK270 output.	–	±150	–	±150	–	±150	–	±150	ps
CLKOUT_PER_JITT_2X	Period jitter at the CLK2X and CLK2X180 outputs.	Maximum = ±[0.5% of CLKIN period + 100]								ps
CLKOUT_PER_JITT_DV1	Period jitter at the CLKDV output when performing integer division.	–	±150	–	±150	–	±150	–	±150	ps
CLKOUT_PER_JITT_DV2	Period jitter at the CLKDV output when performing non-integer division.	Maximum = ±[0.5% of CLKIN period + 100]								ps
Duty Cycle[4]										
CLKOUT_DUTY_CYCLE_DLL	Duty cycle variation for the CLK0, CLK90, CLK180, CLK270, CLK2X, CLK2X180, and CLKDV outputs, including the BUFGMUX and clock tree duty-cycle distortion.	Typical = ±[1% of CLKIN period + 350]								ps
Phase Alignment[4]										
CLKIN_CLKFB_PHASE	Phase offset between the CLKIN and CLKFB inputs (CLK_FEEDBACK = 1X).	–	±150	–	±150	–	±150	–	±250	ps
	Phase offset between the CLKIN and CLKFB inputs (CLK_FEEDBACK = 2X).[6]	–	±250	–	±250	–	±250	–	±350	
CLKOUT_PHASE_DLL	Phase offset between DLL outputs for CLK0 to CLK2X (not CLK2X180).	Maximum = ±[1% of CLKIN period + 100]								ps
	Phase offset between DLL outputs for all others.	Maximum = ±[1% of CLKIN period + 150]						Maximum = ±[1% of CLKIN period + 200]		ps

Table 54: **Switching Characteristics for the Delay-Locked Loop (DLL)[1] *(Cont'd)***

Symbol	Description	Speed Grade								Units
		-3		-3N		-2		-1L		
		Min	Max	Min	Max	Min	Max	Min	Max	
LOCK_DLL[3]	When using the DLL alone: The time from deassertion at the DCM's reset input to the rising transition at its LOCKED output. When the DCM is locked, the CLKIN and CLKFB signals are in phase. CLKIN_FREQ_DLL < 50 MHz.	–	5	–	5	–	5	–	5	ms
	When using the DLL alone: The time from deassertion at the DCM's reset input to the rising transition at its LOCKED output. When the DCM is locked, the CLKIN and CLKFB signals are in phase. CLKIN_FREQ_DLL > 50 MHz	–	0.60	–	0.60	–	0.60	–	0.60	ms
Delay Lines										
DCM_DELAY_STEP[5]	Finest delay resolution, averaged over all steps.	10	40	10	40	10	40	10	40	ps

Notes:
1. The values in this table are based on the operating conditions described in Table 2 and Table 53.
2. Indicates the maximum amount of output jitter that the DCM adds to the jitter on the CLKIN input.
3. For optimal jitter tolerance and faster LOCK time, use the CLKIN_PERIOD attribute.
4. Some jitter and duty-cycle specifications include 1% of input clock period or 0.01 UI. For example, this data sheet specifies a maximum jitter of ±(1% of CLKIN period + 150 ps). Assuming that the CLKIN frequency is 100 MHz, the equivalent CLKIN period is 10 ns. Since 1% of 10 ns is 0.1 ns or 100 ps, the maximum jitter is ±(100 ps + 150 ps) = ±250 ps.
5. A typical delay step size is 23 ps.
6. The timing analysis tools use the CLK_FEEDBACK = 1X condition for the CLKIN_CLKFB_PHASE value (reported as phase error). When using CLK_FEEDBACK = 2X, add 100 ps to the phase error for the CLKIN_CLKFB_PHASE value (as shown in this table).

Table 55: **Recommended Operating Conditions for the Digital Frequency Synthesizer (DFS)[1]**

Symbol	Description	Speed Grade								Units
		-3		-3N		-2		-1L		
		Min	Max	Min	Max	Min	Max	Min	Max	
Input Frequency Ranges[2]										
CLKIN_FREQ_FX	Frequency for the CLKIN input. Also described as F_{CLKIN}.	0.5	375[3]	0.5	375[3]	0.5	333[3]	0.5	200[3]	MHz
Input Clock Jitter Tolerance[4]										
CLKIN_CYC_JITT_FX_LF	Cycle-to-cycle jitter at the CLKIN input, based on CLKFX output frequency: FCLKFX < 150 MHz.	–	±300	–	±300	–	±300	–	±300	ps
CLKIN_CYC_JITT_FX_HF	Cycle-to-cycle jitter at the CLKIN input, based on CLKFX output frequency: FCLKFX > 150 MHz.	–	±150	–	±150	–	±150	–	±150	ps
CLKIN_PER_JITT_FX	Period jitter at the CLKIN input.	–	±1	–	±1	–	±1	–	±1	ns

Notes:
1. DFS specifications apply when using either of the DFS outputs (CLKFX or CLKFX180).
2. When using both DFS and DLL outputs on the same DCM, follow the more restrictive CLKIN_FREQ_DLL specifications in Table 53.
3. The CLKIN_DIVIDE_BY_2 attribute increases the effective input frequency range. When set to TRUE, the input clock frequency is divided by two as it enters the DCM. Input clock frequencies for the clock buffer being used can be increased up to the F_{MAX} (see Table 48 and Table 49 for BUFGMUX and BUFIO2 limits).
4. CLKIN input jitter beyond these limits can cause the DCM to lose LOCK.

Table 56: **Switching Characteristics for the Digital Frequency Synthesizer (DFS) for DCM_SP[1]**

Symbol	Description	Speed Grade								Units
		-3		-3N		-2		-1L		
		Min	Max	Min	Max	Min	Max	Min	Max	
Output Frequency Ranges										
CLKOUT_FREQ_FX	Frequency for the CLKFX and CLKFX180 outputs	5	375	5	375	5	333	5	200	MHz
Output Clock Jitter[2][3]										
CLKOUT_PER_JITT_FX	Period jitter at the CLKFX and CLKFX180 outputs. When CLKIN < 20 MHz	Use the Clocking Wizard								ps
	Period jitter at the CLKFX and CLKFX180 outputs. When CLKIN > 20 MHz	Typical = ±(1% of CLKFX period + 100)								ps
Duty Cycle[4][5]										
CLKOUT_DUTY_CYCLE_FX	Duty cycle precision for the CLKFX and CLKFX180 outputs including the BUFGMUX and clock tree duty-cycle distortion	Maximum = ±(1% of CLKFX period + 350)								ps
Phase Alignment (Phase Error)[5]										
CLKOUT_PHASE_FX	Phase offset between the DFS CLKFX output and the DLL CLK0 output when both the DFS and DLL are used	–	±200	–	±200	–	±200	–	±250	ps
CLKOUT_PHASE_FX180	Phase offset between the DFS CLKFX180 output and the DLL CLK0 output when both the DFS and DLL are used	Maximum = ±(1% of CLKFX period + 200)								ps
LOCKED Time										
LOCK_FX[2]	When FCLKIN < 50 MHz, the time from deassertion at the DCM's reset input to the rising transition at its LOCKED output. The DFS asserts LOCKED when the CLKFX and CLKFX180 signals are valid. When using both the DLL and the DFS, use the longer locking time.	–	5	–	5	–	5	–	5	ms
	When FCLKIN > 50 MHz, the time from deassertion at the DCM's reset input to the rising transition at its LOCKED output. The DFS asserts LOCKED when the CLKFX and CLKFX180 signals are valid. When using both the DLL and the DFS, use the longer locking time.	–	0.45	–	0.45	–	0.45	–	0.60	ms

Notes:
1. The values in this table are based on the operating conditions described in Table 2 and Table 55.
2. For optimal jitter tolerance and a faster LOCK time, use the CLKIN_PERIOD attribute.
3. Output jitter is characterized with no input jitter. Output jitter strongly depends on the environment, including the number of SSOs, the output drive strength, CLB utilization, CLB switching activities, switching frequency, power supply, and PCB design. The actual maximum output jitter depends on the system application.
4. The CLKFX, CLKFXDV, and CLKFX180 outputs have a duty cycle of approximately 50%.
5. Some duty cycle and alignment specifications include a percentage of the CLKFX output period. For example, this data sheet specifies a maximum CLKFX jitter of ±(1% of CLKFX period + 200 ps). Assuming that the CLKFX output frequency is 100 MHz, the equivalent CLKFX period is 10 ns, and 1% of 10 ns is 0.1 ns or 100 ps. Accordingly, the maximum jitter is ±(100 ps + 200 ps) = ±300 ps.

Table 57: **Switching Characteristics for the Digital Frequency Synthesizer DFS (DCM_CLKGEN)[1]**

Symbol	Description	Speed Grade								Units
		-3		-3N		-2		-1L		
		Min	Max	Min	Max	Min	Max	Min	Max	
Output Frequency Ranges (DCM_CLKGEN)										
CLKOUT_FREQ_FX	Frequency for the CLKFX and CLKFX180 outputs	5	375	5	375	5	333	5	200	MHz
CLKOUT_FREQ_FXDV	Frequency for the CLKFXDV output	0.15625	187.5	0.15625	187.5	0.15625	166.5	0.15625	100	MHz
Output Clock Jitter[2][3]										
CLKOUT_PER_JITT_FX	Period jitter at the CLKFX and CLKFX180 outputs.	Typical = ±[0.2% of CLKFX period + 100]								ps
CLKOUT_PER_JITT_FXDV	Period jitter at the CLKFXDV output.	Typical = ±[0.2% of CLKFX period + 100]								ps
CLKFX_FREEZE_VAR	CLKFX period change in free running oscillator mode at the same temperature. FCLKFX > 50 MHz	Maximum = ±3% of CLKFX period								ps
	CLKFX period change in free running oscillator mode at the same temperature. FCLKFX < 50 MHz	Maximum = ±5% of CLKFX period								ps
CLKFX_FREEZE_TEMP_SLOPE	CLKFX period will change in free_oscillator mode over temperature. Add to CLKFX_FREEZE_VAR to determine total CLKFX period change. Percentage change for CLKFX period over 1°C.	Maximum = 0.1								%/°C
Duty Cycle[4][5]										
CLKOUT_DUTY_CYCLE_FX	Duty cycle precision for the CLKFX and CLKFX180 outputs, including the BUFGMUX and clock tree duty-cycle distortion	Maximum = ±[1% of CLKFX period + 350]								ps
CLKOUT_DUTY_CYCLE_FXDV	Duty cycle precision for the CLKFXDV outputs, including the BUFGMUX and clock tree duty-cycle distortion	Maximum = ±[1% of CLKFX period + 350]								ps
Lock Time										
LOCK_FX[2][7]	The time from deassertion at the DCM's Reset input to the rising transition at its LOCKED output. The DFS asserts LOCKED when the CLKFX, CLKFX180, and CLKFXDV signals are valid. Lock time requires CLKFX_DIVIDE < F_{IN}/(0.50 MHz) when: F_{CLKIN} < 50 MHz	–	50	–	50	–	50	–	50	ms
	when: F_{CLKIN} > 50 MHz	–	5	–	5	–	5	–	5	ms

Table 57: **Switching Characteristics for the Digital Frequency Synthesizer DFS (DCM_CLKGEN)(1) *(Cont'd)***

Symbol	Description	Speed Grade								Units
		-3		-3N		-2		-1L		
		Min	Max	Min	Max	Min	Max	Min	Max	
Spread Spectrum										
$F_{CLKIN_FIXED_SPREAD_SPECTRUM}$	Frequency of the CLKIN input for fixed spread spectrum (SPREAD_SPECTRUM = CENTER_LOW_SPREAD/ CENTER_HIGH_SPREAD)	30	200	30	200	30	200	30	200	MHz
$T_{CENTER_LOW_SPREAD}$(6)	Spread at the CLKFX output for fixed spread spectrum (SPREAD_SPECTRUM = CENTER_LOW_SPREAD)	Typical = $\frac{100}{CLKFX_DIVIDE}$ Maximum = 250								ps
$T_{CENTER_HIGH_SPREAD}$(6)	Spread at the CLKFX output for fixed spread spectrum (SPREAD_SPECTRUM= CENTER_HIGH_SPREAD)	Typical = $\frac{240}{CLKFX_DIVIDE}$ Maximum = 400								ps
$F_{MOD_FIXED_SPREAD_SPECTRUM}$(6)	Average modulation frequency when using fixed spread spectrum (SPREAD_SPECTRUM = CENTER_LOW_SPREAD / CENTER_HIGH_SPREAD)	Typical = $F_{IN}/1024$								MHz

Notes:
1. The values in this table are based on the operating conditions described in Table 2 and Table 55.
2. For optimal jitter tolerance and a faster LOCK time, use the CLKIN_PERIOD attribute.
3. Output jitter is characterized with no input jitter. Output jitter strongly depends on the environment, including the number of SSOs, the output drive strength, CLB utilization, CLB switching activities, switching frequency, power supply, and PCB design. The actual maximum output jitter depends on the system application.
4. The CLKFX, CLKFXDV, and CLKFX180 outputs have a duty cycle of approximately 50%.
5. Some duty-cycle and alignment specifications include a percentage of the CLKFX output period. For example, this data sheet specifies a maximum CLKFX jitter of ±(1% of CLKFX period + 200 ps). Assuming that the CLKFX output frequency is 100 MHz, the equivalent CLKFX period is 10 ns, and 1% of 10 ns is 0.1 ns or 100 ps. Accordingly, the maximum jitter is ±(100 ps + 200 ps) = ±300 ps.
6. When using CENTER_LOW_SPREAD, CENTER_HIGH_SPREAD, the valid values for CLKFX_MULTIPLY are limited to 2 through 32, and the valid values for CLKFX_DIVIDE are limited to 1 through 4, with the resulting CLKFX or CLKFX180 output frequency limited to a minimum of 50 MHz.
7. When using dynamic frequency synthesis, LOCK_FX does not apply.

Table 58: **Recommended Operating Conditions for the Phase-Shift Clock in Variable Phase Mode (DCM_SP) or Dynamic Frequency Synthesis (DCM_CLKGEN)**

Symbol	Description	Speed Grade								Units
		-3		-3N		-2		-1L		
		Min	Max	Min	Max	Min	Max	Min	Max	
Operating Frequency Ranges										
PSCLK_FREQ	Frequency for the PSCLK (DCM_SP) or PROGCLK (DCM_CLKGEN) input.	1	167	1	167	1	167	1	100	MHz
Input Pulse Requirements										
PSCLK_PULSE	PSCLK (DCM_SP) or PROGCLK (DCM_CLKGEN) pulse width as a percentage of the clock period.	40	60	40	60	40	60	40	60	%

Table 59: **Switching Characteristics for the Phase-Shift Clock in Variable Phase Mode(1)**

Symbol	Description	Amount of Phase Shift	Units
Phase Shifting Range			
MAX_STEPS(2)	When CLKIN < 60 MHz, the maximum allowed number of DCM_DELAY_STEP steps for a given CLKIN clock period, where T = CLKIN clock period in ns. When using CLKIN_DIVIDE_BY_2 = TRUE, double the clock-effective clock period.	±(INTEGER(10 x (TCLKIN – 3 ns)))	steps
	When CLKIN ≥ 60 MHz, the maximum allowed number of DCM_DELAY_STEP steps for a given CLKIN clock period, where T = CLKIN clock period in ns. When using CLKIN_DIVIDE_BY_2 = TRUE, double the clock-effective clock period.	±(INTEGER(15 x (TCLKIN – 3 ns)))	steps
FINE_SHIFT_RANGE_MIN	Minimum guaranteed delay for variable phase shifting.	±(MAX_STEPS x DCM_DELAY_STEP_MIN)	ps
FINE_SHIFT_RANGE_MAX	Maximum guaranteed delay for variable phase shifting	±(MAX_STEPS x DCM_DELAY_STEP_MAX)	ps

Notes:
1. The values in this table are based on the operating conditions described in Table 53 and Table 58.
2. The maximum variable phase shift range, MAX_STEPS, is only valid when the DCM has no initial fixed-phase shifting, that is, the PHASE_SHIFT attribute is set to 0.
3. The DCM_DELAY_STEP values are provided at the end of Table 54.

Table 60: **Miscellaneous DCM Timing Parameters(1)**

Symbol	Description	Min	Max	Units
DCM_RST_PW_MIN	Minimum duration of a RST pulse width	3	–	CLKIN cycles

Notes:
1. This limit only applies to applications that use the DCM DLL outputs (CLK0, CLK90, CLK180, CLK270, CLK2X, CLK2X180, and CLKDV). The DCM DFS outputs (CLKFX, CLKFXDV, CLKFX180) are unaffected.

Table 61: **Frequency Synthesis**

Attribute	Min	Max
CLKFX_MULTIPLY (DCM_SP)	2	32
CLKFX_DIVIDE (DCM_SP)	1	32
CLKDV_DIVIDE (DCM_SP)	1.5	16
CLKFX_MULTIPLY (DCM_CLKGEN)	2	256
CLKFX_DIVIDE (DCM_CLKGEN)	1	256
CLKFXDV_DIVIDE (DCM_CLKGEN)	2	32

Table 62: **DCM Switching Characteristics**

Symbol	Description	Speed Grade				Units
		-3	-3N	-2	-1L	
T_{DMCCK_PSEN}/ T_{DMCKC_PSEN}	PSEN Setup/Hold	1.50/ 0.00	1.50/ 0.00	1.50/ 0.00	1.50/ 0.00	ns
$T_{DMCCK_PSINCDEC}$/ $T_{DMCKC_PSINCDEC}$	PSINCDEC Setup/Hold	1.50/ 0.00	1.50/ 0.00	1.50/ 0.00	1.50/ 0.00	ns
T_{DMCKO_PSDONE}	Clock to out of PSDONE	1.50	1.50	1.50	1.50	ns

Spartan-6 Device Pin-to-Pin Output Parameter Guidelines

All devices are 100% functionally tested. The representative values for typical pin locations and normal clock loading are listed in Table 63 through Table 69. Values are expressed in nanoseconds unless otherwise noted.

Table 63: **Global Clock Input to Output Delay Without DCM or PLL**

Symbol	Description	Device	Speed Grade				Units
			-3	-3N	-2	-1L	
LVCMOS25 Global Clock Input to Output Delay using Output Flip-Flop, 12mA, Fast Slew Rate, *without* DCM or PLL							
T_{ICKOF}	Global Clock and OUTFF *without* DCM or PLL	XC6SLX4	6.12	N/A	7.68	9.41	ns
		XC6SLX9	6.12	6.51	7.68	9.41	ns
		XC6SLX16	5.98	6.42	7.48	9.10	ns
		XC6SLX25	6.20	6.69	7.84	9.44	ns
		XC6SLX25T	6.20	6.69	7.84	N/A	ns
		XC6SLX45	6.37	6.88	8.10	9.61	ns
		XC6SLX45T	6.37	6.88	8.10	N/A	ns
		XC6SLX75	6.39	6.99	8.16	10.18	ns
		XC6SLX75T	6.39	6.99	8.16	N/A	ns
		XC6SLX100	6.59	7.18	8.41	10.31	ns
		XC6SLX100T	6.59	7.18	8.41	N/A	ns
		XC6SLX150	6.98	7.68	8.80	10.62	ns
		XC6SLX150T	6.98	7.68	8.80	N/A	ns
		XA6SLX4	6.44	N/A	7.68	N/A	ns
		XA6SLX9	6.44	N/A	7.68	N/A	ns
		XA6SLX16	6.30	N/A	7.48	N/A	ns
		XA6SLX25	6.52	N/A	7.84	N/A	ns
		XA6SLX25T	6.52	N/A	7.84	N/A	ns
		XA6SLX45	6.69	N/A	8.12	N/A	ns
		XA6SLX45T	6.69	N/A	8.12	N/A	ns
		XA6SLX75	6.89	N/A	8.16	N/A	ns
		XA6SLX75T	6.89	N/A	8.16	N/A	ns
		XA6SLX100	N/A	N/A	8.36	N/A	ns
		XQ6SLX75	N/A	N/A	8.16	10.18	ns
		XQ6SLX75T	6.89	N/A	8.16	N/A	ns
		XQ6SLX150	N/A	N/A	8.80	10.62	ns
		XQ6SLX150T	7.61	N/A	8.80	N/A	ns

Notes:
1. Listed above are representative values where one global clock input drives one vertical clock line in each accessible column, and where all accessible IOB and CLB flip-flops are clocked by the global clock net.

Table 64: **Global Clock Input to Output Delay With DCM in System-Synchronous Mode**

Symbol	Description	Device	Speed Grade				Units
			-3	-3N	-2	-1L	
LVCMOS25 Global Clock Input to Output Delay using Output Flip-Flop, 12mA, Fast Slew Rate, *with* DCM in System-Synchronous Mode.							
$T_{ICKOFDCM}$	Global Clock and OUTFF *with* DCM	XC6SLX4	4.23	N/A	6.11	6.60	ns
		XC6SLX9	4.23	5.17	6.11	6.60	ns
		XC6SLX16	4.28	4.57	5.34	6.36	ns
		XC6SLX25	3.95	4.18	4.59	6.91	ns
		XC6SLX25T	3.95	4.18	4.59	N/A	ns
		XC6SLX45	4.37	4.70	5.50	6.85	ns
		XC6SLX45T	4.37	4.70	5.50	N/A	ns
		XC6SLX75	3.90	4.23	4.77	6.31	ns
		XC6SLX75T	3.90	4.23	4.77	N/A	ns
		XC6SLX100	3.86	4.16	4.66	7.25	ns
		XC6SLX100T	3.90	4.16	4.66	N/A	ns
		XC6SLX150	4.03	4.33	4.83	6.63	ns
		XC6SLX150T	4.03	4.33	4.83	N/A	ns
		XA6SLX4	4.55	N/A	6.11	N/A	ns
		XA6SLX9	4.55	N/A	6.11	N/A	ns
		XA6SLX16	4.62	N/A	5.33	N/A	ns
		XA6SLX25	4.27	N/A	4.59	N/A	ns
		XA6SLX25T	4.27	N/A	4.69	N/A	ns
		XA6SLX45	4.69	N/A	5.50	N/A	ns
		XA6SLX45T	4.69	N/A	5.50	N/A	ns
		XA6SLX75	4.22	N/A	4.77	N/A	ns
		XA6SLX75T	4.22	N/A	4.77	N/A	ns
		XA6SLX100	N/A	N/A	5.34	N/A	ns
		XQ6SLX75	N/A	N/A	4.77	6.31	ns
		XQ6SLX75T	4.22	N/A	4.77	N/A	ns
		XQ6SLX150	N/A	N/A	4.96	6.63	ns
		XQ6SLX150T	4.62	N/A	4.96	N/A	ns

Notes:
1. Listed above are representative values where one global clock input drives one vertical clock line in each accessible column, and where all accessible IOB and CLB flip-flops are clocked by the global clock net.
2. DCM output jitter is already included in the timing calculation.

Table 65: **Global Clock Input to Output Delay With DCM in Source-Synchronous Mode**

Symbol	Description	Device	Speed Grade				Units
			-3	-3N	-2	-1L	
LVCMOS25 Global Clock Input to Output Delay using Output Flip-Flop, 12mA, Fast Slew Rate, *with* DCM in Source-Synchronous Mode.							
$T_{ICKOFDCM_0}$	Global Clock and OUTFF *with* DCM	XC6SLX4	5.03	N/A	7.21	8.05	ns
		XC6SLX9	5.03	6.13	7.21	8.05	ns
		XC6SLX16	5.08	5.51	6.44	7.96	ns
		XC6SLX25	4.81	5.13	5.69	7.94	ns
		XC6SLX25T	4.81	5.13	5.69	N/A	ns
		XC6SLX45	5.26	5.69	6.63	7.92	ns
		XC6SLX45T	5.26	5.69	6.63	N/A	ns
		XC6SLX75	4.77	5.18	5.88	7.95	ns
		XC6SLX75T	4.77	5.18	5.88	N/A	ns
		XC6SLX100	4.72	5.11	5.76	8.59	ns
		XC6SLX100T	4.76	5.11	5.76	N/A	ns
		XC6SLX150	4.90	5.30	5.93	7.93	ns
		XC6SLX150T	4.90	5.30	5.93	N/A	ns
		XA6SLX4	5.35	N/A	7.21	N/A	ns
		XA6SLX9	5.35	N/A	7.21	N/A	ns
		XA6SLX16	5.42	N/A	6.44	N/A	ns
		XA6SLX25	5.13	N/A	5.69	N/A	ns
		XA6SLX25T	5.13	N/A	5.79	N/A	ns
		XA6SLX45	5.58	N/A	6.63	N/A	ns
		XA6SLX45T	5.58	N/A	6.63	N/A	ns
		XA6SLX75	5.09	N/A	5.87	N/A	ns
		XA6SLX75T	5.09	N/A	5.87	N/A	ns
		XA6SLX100	N/A	N/A	6.44	N/A	ns
		XQ6SLX75	N/A	N/A	5.87	7.95	ns
		XQ6SLX75T	5.09	N/A	5.87	N/A	ns
		XQ6SLX150	N/A	N/A	6.06	7.93	ns
		XQ6SLX150T	5.50	N/A	6.06	N/A	ns

Notes:
1. Listed above are representative values where one global clock input drives one vertical clock line in each accessible column, and where all accessible IOB and CLB flip-flops are clocked by the global clock net.
2. DCM output jitter is already included in the timing calculation.

Table 66: **Global Clock Input to Output Delay With PLL in System-Synchronous Mode**

Symbol	Description	Device	Speed Grade				Units
			-3	-3N	-2	-1L	
LVCMOS25 Global Clock Input to Output Delay using Output Flip-Flop, 12mA, Fast Slew Rate, *with* PLL in System-Synchronous Mode.							
$T_{ICKOFPLL}$	Global Clock and OUTFF *with* PLL	XC6SLX4	4.57	N/A	6.25	7.34	ns
		XC6SLX9	4.57	5.25	6.25	7.34	ns
		XC6SLX16	4.41	4.64	5.39	6.92	ns
		XC6SLX25	4.03	4.32	4.91	7.64	ns
		XC6SLX25T	4.03	4.32	4.91	N/A	ns
		XC6SLX45	4.63	4.96	5.75	7.36	ns
		XC6SLX45T	4.63	4.96	5.75	N/A	ns
		XC6SLX75	4.01	4.30	4.88	7.15	ns
		XC6SLX75T	4.01	4.30	4.88	N/A	ns
		XC6SLX100	4.02	4.33	4.90	7.37	ns
		XC6SLX100T	4.06	4.33	4.90	N/A	ns
		XC6SLX150	3.65	3.98	4.58	6.94	ns
		XC6SLX150T	3.65	3.98	4.58	N/A	ns
		XA6SLX4	4.88	N/A	6.13	N/A	ns
		XA6SLX9	4.88	N/A	6.13	N/A	ns
		XA6SLX16	4.74	N/A	5.27	N/A	ns
		XA6SLX25	4.43	N/A	4.78	N/A	ns
		XA6SLX25T	4.43	N/A	4.88	N/A	ns
		XA6SLX45	4.94	N/A	5.62	N/A	ns
		XA6SLX45T	4.94	N/A	5.62	N/A	ns
		XA6SLX75	4.32	N/A	4.77	N/A	ns
		XA6SLX75T	4.32	N/A	4.77	N/A	ns
		XA6SLX100	N/A	N/A	5.41	N/A	ns
		XQ6SLX75	N/A	N/A	4.77	7.15	ns
		XQ6SLX75T	4.32	N/A	4.77	N/A	ns
		XQ6SLX150	N/A	N/A	4.60	6.94	ns
		XQ6SLX150T	4.35	N/A	4.60	N/A	ns

Notes:
1. Listed above are representative values where one global clock input drives one vertical clock line in each accessible column, and where all accessible IOB and CLB flip-flops are clocked by the global clock net.
2. PLL output jitter is included in the timing calculation.

Table 67: **Global Clock Input to Output Delay With PLL in Source-Synchronous Mode**

Symbol	Description	Device	Speed Grade				Units
			-3	-3N	-2	-1L	
LVCMOS25 Global Clock Input to Output Delay using Output Flip-Flop, 12mA, Fast Slew Rate, *with* PLL in Source-Synchronous Mode.							
$T_{ICKOFPLL_0}$	Global Clock and OUTFF *with* PLL	XC6SLX4	5.49	N/A	7.44	8.55	ns
		XC6SLX9	5.49	6.29	7.44	8.55	ns
		XC6SLX16	5.23	5.77	6.79	8.21	ns
		XC6SLX25	5.00	5.35	6.10	8.54	ns
		XC6SLX25T	5.00	5.35	6.10	N/A	ns
		XC6SLX45	5.59	6.03	7.02	8.39	ns
		XC6SLX45T	5.59	6.03	7.02	N/A	ns
		XC6SLX75	4.96	5.41	6.22	8.32	ns
		XC6SLX75T	4.96	5.41	6.22	N/A	ns
		XC6SLX100	4.97	5.42	6.21	9.08	ns
		XC6SLX100T	5.01	5.42	6.21	N/A	ns
		XC6SLX150	4.59	5.06	5.86	8.13	ns
		XC6SLX150T	4.59	5.06	5.86	N/A	ns
		XA6SLX4	5.79	N/A	7.32	N/A	ns
		XA6SLX9	5.79	N/A	7.32	N/A	ns
		XA6SLX16	5.56	N/A	6.66	N/A	ns
		XA6SLX25	5.40	N/A	5.97	N/A	ns
		XA6SLX25T	5.40	N/A	6.07	N/A	ns
		XA6SLX45	5.89	N/A	6.90	N/A	ns
		XA6SLX45T	5.89	N/A	6.90	N/A	ns
		XA6SLX75	5.27	N/A	6.12	N/A	ns
		XA6SLX75T	5.27	N/A	6.12	N/A	ns
		XA6SLX100	N/A	N/A	6.80	N/A	ns
		XQ6SLX75	N/A	N/A	6.12	8.32	ns
		XQ6SLX75T	5.27	N/A	6.12	N/A	ns
		XQ6SLX150	N/A	N/A	5.88	8.13	ns
		XQ6SLX150T	5.21	N/A	5.88	N/A	ns

Notes:
1. Listed above are representative values where one global clock input drives one vertical clock line in each accessible column, and where all accessible IOB and CLB flip-flops are clocked by the global clock net.
2. PLL output jitter is included in the timing calculation.

Table 68: **Global Clock Input to Output Delay With DCM and PLL in System-Synchronous Mode**

Symbol	Description	Device	Speed Grade				Units
			-3	-3N	-2	-1L	
LVCMOS25 Global Clock Input to Output Delay using Output Flip-Flop, 12mA, Fast Slew Rate, *with* DCM in System-Synchronous Mode and PLL in DCM2PLL Mode.							
$T_{ICKOFDCM_PLL}$	Global Clock and OUTFF with DCM and PLL	XC6SLX4	4.78	N/A	6.32	7.09	ns
		XC6SLX9	4.78	5.24	6.32	7.09	ns
		XC6SLX16	4.70	5.12	5.94	6.63	ns
		XC6SLX25	4.70	5.09	5.92	7.30	ns
		XC6SLX25T	4.70	5.09	5.92	N/A	ns
		XC6SLX45	4.63	4.98	5.83	7.26	ns
		XC6SLX45T	4.63	4.98	5.83	N/A	ns
		XC6SLX75	4.68	5.04	5.88	6.90	ns
		XC6SLX75T	4.68	5.04	5.88	N/A	ns
		XC6SLX100	4.72	5.07	5.92	7.77	ns
		XC6SLX100T	4.76	5.07	5.92	N/A	ns
		XC6SLX150	4.44	4.73	5.31	6.96	ns
		XC6SLX150T	4.44	4.73	5.31	N/A	ns
		XA6SLX4	5.07	N/A	6.18	N/A	ns
		XA6SLX9	5.07	N/A	6.18	N/A	ns
		XA6SLX16	5.22	N/A	5.77	N/A	ns
		XA6SLX25	5.01	N/A	5.80	N/A	ns
		XA6SLX25T	5.01	N/A	5.90	N/A	ns
		XA6SLX45	4.93	N/A	5.67	N/A	ns
		XA6SLX45T	4.93	N/A	5.67	N/A	ns
		XA6SLX75	4.94	N/A	5.70	N/A	ns
		XA6SLX75T	4.94	N/A	5.70	N/A	ns
		XA6SLX100	N/A	N/A	5.77	N/A	ns
		XQ6SLX75	N/A	N/A	5.70	6.90	ns
		XQ6SLX75T	4.94	N/A	5.70	N/A	ns
		XQ6SLX150	N/A	N/A	5.31	6.96	ns
		XQ6SLX150T	5.02	N/A	5.31	N/A	ns

Notes:
1. Listed above are representative values where one global clock input drives one vertical clock line in each accessible column, and where all accessible IOB and CLB flip-flops are clocked by the global clock net.
2. DCM and PLL output jitter are already included in the timing calculation.

Table 69: **Global Clock Input to Output Delay With DCM and PLL in Source-Synchronous Mode**

Symbol	Description	Device	Speed Grade				Units
			-3	-3N	-2	-1L	
LVCMOS25 Global Clock Input to Output Delay using Output Flip-Flop, 12mA, Fast Slew Rate, *with* DCM in Source-Synchronous Mode and PLL in DCM2PLL Mode.							
$T_{ICKOFDCM0_PLL}$	Global Clock and OUTFF with DCM and PLL	XC6SLX4	5.58	N/A	7.42	8.54	ns
		XC6SLX9	5.58	6.19	7.42	8.54	ns
		XC6SLX16	5.50	6.06	7.05	8.24	ns
		XC6SLX25	5.57	6.04	7.02	8.33	ns
		XC6SLX25T	5.57	6.04	7.02	N/A	ns
		XC6SLX45	5.53	5.97	6.96	8.32	ns
		XC6SLX45T	5.53	5.97	6.96	N/A	ns
		XC6SLX75	5.55	6.00	6.99	8.54	ns
		XC6SLX75T	5.55	6.00	6.99	N/A	ns
		XC6SLX100	5.58	6.03	7.02	9.11	ns
		XC6SLX100T	5.62	6.03	7.02	N/A	ns
		XC6SLX150	5.32	5.70	6.41	8.26	ns
		XC6SLX150T	5.32	5.70	6.41	N/A	ns
		XA6SLX4	5.87	N/A	7.28	N/A	ns
		XA6SLX9	5.87	N/A	7.28	N/A	ns
		XA6SLX16	6.02	N/A	6.87	N/A	ns
		XA6SLX25	5.88	N/A	6.90	N/A	ns
		XA6SLX25T	5.88	N/A	7.00	N/A	ns
		XA6SLX45	5.82	N/A	6.81	N/A	ns
		XA6SLX45T	5.82	N/A	6.81	N/A	ns
		XA6SLX75	5.81	N/A	6.80	N/A	ns
		XA6SLX75T	5.81	N/A	6.80	N/A	ns
		XA6SLX100	N/A	N/A	6.88	N/A	ns
		XQ6SLX75	N/A	N/A	6.80	8.54	ns
		XQ6SLX75T	5.81	N/A	6.80	N/A	ns
		XQ6SLX150	N/A	N/A	6.41	8.26	ns
		XQ6SLX150T	5.90	N/A	6.41	N/A	ns

Notes:
1. Listed above are representative values where one global clock input drives one vertical clock line in each accessible column, and where all accessible IOB and CLB flip-flops are clocked by the global clock net.
2. DCM and PLL output jitter are already included in the timing calculation.

Spartan-6 Device Pin-to-Pin Input Parameter Guidelines

All devices are 100% functionally tested. The representative values for typical pin locations and normal clock loading are listed in Table 70 through Table 77. Values are expressed in nanoseconds unless otherwise noted.

Table 70: **Global Clock Setup and Hold Without DCM or PLL (No Delay)**

Symbol	Description	Device	Speed Grade				Units
			-3	-3N	-2	-1L	
Input Setup and Hold Time Relative to Global Clock Input Signal for LVCMOS25 Standard.(1)							
T_{PSND}/ T_{PHND}	No Delay Global Clock and IFF(3) without DCM or PLL	XC6SLX4	0.10/1.56	N/A	0.10/1.83	0.07/2.54	ns
		XC6SLX9	0.10/1.56	0.10/1.57	0.10/1.84	0.07/2.54	ns
		XC6SLX16	0.12/1.42	0.12/1.48	0.12/1.64	0.13/2.19	ns
		XC6SLX25	0.18/1.64	0.18/1.75	0.18/1.99	0.11/2.57	ns
		XC6SLX25T	0.18/1.64	0.18/1.75	0.18/1.99	N/A	ns
		XC6SLX45	–0.08/1.80	–0.08/1.95	–0.08/2.27	–0.17/2.74	ns
		XC6SLX45T	–0.08/1.80	–0.08/1.95	–0.08/2.27	N/A	ns
		XC6SLX75	0.13/1.81	0.13/2.06	0.13/2.27	–0.12/3.30	ns
		XC6SLX75T	0.13/1.81	0.13/2.06	0.13/2.27	N/A	ns
		XC6SLX100	–0.14/2.03	–0.14/2.24	–0.14/2.56	–0.17/3.44	ns
		XC6SLX100T	–0.14/2.03	–0.14/2.24	–0.14/2.56	N/A	ns
		XC6SLX150	–0.24/2.42	–0.24/2.74	–0.24/2.95	–0.60/3.75	ns
		XC6SLX150T	–0.24/2.42	–0.24/2.74	–0.24/2.95	N/A	ns
		XA6SLX4	0.10/1.57	N/A	0.10/1.84	N/A	ns
		XA6SLX9	0.10/1.57	N/A	0.10/1.84	N/A	ns
		XA6SLX16	0.12/1.43	N/A	0.12/1.64	N/A	ns
		XA6SLX25	0.18/1.65	N/A	0.18/1.99	N/A	ns
		XA6SLX25T	0.18/1.65	N/A	0.18/1.99	N/A	ns
		XA6SLX45	–0.08/1.82	N/A	–0.08/2.27	N/A	ns
		XA6SLX45T	–0.08/1.82	N/A	–0.08/2.27	N/A	ns
		XA6SLX75	0.13/2.02	N/A	0.13/2.32	N/A	ns
		XA6SLX75T	0.13/2.02	N/A	0.13/2.32	N/A	ns
		XA6SLX100	N/A	N/A	0.10/2.51	N/A	ns
		XQ6SLX75	N/A	N/A	0.13/2.32	–0.12/3.30	ns
		XQ6SLX75T	0.13/2.02	N/A	0.13/2.32	N/A	ns
		XQ6SLX150	N/A	N/A	–0.24/2.95	–0.60/3.75	ns
		XQ6SLX150T	–0.24/2.74	N/A	–0.24/2.95	N/A	ns

Notes:
1. Setup and Hold times are measured over worst case conditions (process, voltage, temperature). Setup time is measured relative to the Global Clock input signal using the slowest process, highest temperature, and lowest voltage. Hold time is measured relative to the Global Clock input signal using the fastest process, lowest temperature, and highest voltage.
2. IFF = Input Flip-Flop or Latch.

Table 71: **Global Clock Setup and Hold Without DCM or PLL (Default Delay)**

Symbol	Description	Device	Speed Grade				Units
			-3	-3N	-2	-1L	
Input Setup and Hold Time Relative to Global Clock Input Signal for LVCMOS25 Standard.(1)							
T_{PSFD}/ T_{PHFD}	Default Delay(2) Global Clock and IFF(3) without DCM or PLL	XC6SLX4	0.66/1.17	N/A	1.05/0.79	2.09/1.05	ns
		XC6SLX9	0.66/1.17	0.75/1.17	1.05/1.17	2.09/1.05	ns
		XC6SLX16	0.87/1.16	0.93/1.16	0.96/1.16	1.86/1.06	ns
		XC6SLX25	0.68/0.77	0.81/0.81	0.87/0.82	2.21/1.33	ns
		XC6SLX25T	0.68/0.77	0.81/0.81	0.87/0.82	N/A	ns
		XC6SLX45	0.40/1.05	0.42/1.17	0.64/1.20	1.61/1.67	ns
		XC6SLX45T	0.40/1.05	0.42/1.17	0.64/1.20	N/A	ns
		XC6SLX75	0.41/1.11	0.41/1.13	0.80/1.14	1.23/1.82	ns
		XC6SLX75T	0.41/1.11	0.41/1.13	0.80/1.14	N/A	ns
		XC6SLX100	0.39/1.12	0.39/1.23	0.39/1.28	1.13/1.94	ns
		XC6SLX100T	0.39/1.12	0.39/1.23	0.39/1.28	N/A	ns
		XC6SLX150	0.23/1.54	0.23/1.62	0.23/1.62	1.14/2.05	ns
		XC6SLX150T	0.23/1.54	0.23/1.62	0.23/1.62	N/A	ns
		XA6SLX4	0.73/1.18	N/A	1.05/0.80	N/A	ns
		XA6SLX9	0.73/1.18	N/A	1.05/0.80	N/A	ns
		XA6SLX16	0.90/1.20	N/A	0.96/0.75	N/A	ns
		XA6SLX25	0.70/0.81	N/A	0.87/0.91	N/A	ns
		XA6SLX25T	0.76/0.81	N/A	1.03/0.91	N/A	ns
		XA6SLX45	0.40/1.06	N/A	0.64/1.20	N/A	ns
		XA6SLX45T	0.40/1.06	N/A	0.64/1.20	N/A	ns
		XA6SLX75	0.41/1.24	N/A	0.80/1.18	N/A	ns
		XA6SLX75T	0.41/1.24	N/A	0.80/1.18	N/A	ns
		XA6SLX100	N/A	N/A	0.86/1.55	N/A	ns
		XQ6SLX75	N/A	N/A	0.80/1.18	1.23/1.82	ns
		XQ6SLX75T	0.41/1.24	N/A	0.80/1.18	N/A	ns
		XQ6SLX150	N/A	N/A	0.28/1.57	1.14/2.05	ns
		XQ6SLX150T	0.28/1.78	N/A	0.28/1.57	N/A	ns

Notes:

1. Setup and Hold times are measured over worst case conditions (process, voltage, temperature). Setup time is measured relative to the Global Clock input signal using the slowest process, highest temperature, and lowest voltage. Hold time is measured relative to the Global Clock input signal using the fastest process, lowest temperature, and highest voltage.
2. Default delay uses IODELAY2 tap 0.
3. IFF = Input Flip-Flop or Latch.

Table 72: **Global Clock Setup and Hold With DCM in System-Synchronous Mode**

Symbol	Description	Device	Speed Grade				Units
			-3	-3N	-2	-1L	
Input Setup and Hold Time Relative to Global Clock Input Signal for LVCMOS25 Standard.(1)							
T_{PSDCM}/ T_{PHDCM}	No Delay Global Clock and IFF(2) with DCM in System-Synchronous Mode	XC6SLX4	1.54/0.06	N/A	1.75/0.12	2.84/0.27	ns
		XC6SLX9	1.54/0.06	1.63/0.12	1.75/0.12	2.84/0.27	ns
		XC6SLX16	1.72/–0.18	1.87/–0.17	2.13/–0.17	2.31/0.26	ns
		XC6SLX25	1.70/–0.03	1.78/–0.02	2.00/–0.02	2.88/0.20	ns
		XC6SLX25T	1.70/0.07	1.78/0.08	2.00/0.08	N/A	ns
		XC6SLX45	1.74/–0.03	1.84/–0.02	2.02/–0.02	2.64/0.52	ns
		XC6SLX45T	1.74/–0.01	1.84/0.00	2.02/0.00	N/A	ns
		XC6SLX75	1.86/0.11	1.98/0.12	2.20/0.12	2.96/0.58	ns
		XC6SLX75T	1.86/0.11	1.98/0.12	2.20/0.12	N/A	ns
		XC6SLX100	1.64/0.07	1.72/0.08	1.97/0.08	2.70/0.99	ns
		XC6SLX100T	1.64/0.09	1.72/0.10	1.97/0.10	N/A	ns
		XC6SLX150	1.53/0.39	1.62/0.40	1.82/0.40	2.75/1.00	ns
		XC6SLX150T	1.53/0.39	1.62/0.40	1.82/0.40	N/A	ns
		XA6SLX4	1.65/0.16	N/A	1.75/0.26	N/A	ns
		XA6SLX9	1.65/0.16	N/A	1.75/0.26	N/A	ns
		XA6SLX16	1.88/0.02	N/A	2.13/0.03	N/A	ns
		XA6SLX25	1.80/0.16	N/A	2.05/0.17	N/A	ns
		XA6SLX25T	1.80/0.16	N/A	2.13/0.17	N/A	ns
		XA6SLX45	1.75/0.12	N/A	2.02/0.13	N/A	ns
		XA6SLX45T	1.75/0.12	N/A	2.02/0.13	N/A	ns
		XA6SLX75	1.87/0.11	N/A	2.20/0.12	N/A	ns
		XA6SLX75T	1.87/0.11	N/A	2.20/0.12	N/A	ns
		XA6SLX100	N/A	N/A	2.46/0.24	N/A	ns
		XQ6SLX75	N/A	N/A	2.20/0.12	2.96/0.58	ns
		XQ6SLX75T	1.87/0.11	N/A	2.20/0.12	N/A	ns
		XQ6SLX150	N/A	N/A	1.82/0.56	2.75/1.00	ns
		XQ6SLX150T	1.65/0.55	N/A	1.82/0.56	N/A	ns

Notes:
1. Setup and Hold times are measured over worst case conditions (process, voltage, temperature). Setup time is measured relative to the Global Clock input signal using the slowest process, highest temperature, and lowest voltage. Hold time is measured relative to the Global Clock input signal using the fastest process, lowest temperature, and highest voltage. These measurements include DCM CLK0 jitter.
2. IFF = Input Flip-Flop or Latch
3. Use IBIS to determine any duty-cycle distortion incurred using various standards.

Table 73: **Global Clock Setup and Hold With DCM in Source-Synchronous Mode**

Symbol	Description	Device	Speed Grade				Units
			-3	-3N	-2	-1L	
Input Setup and Hold Time Relative to Global Clock Input Signal for LVCMOS25 Standard.(1)							
T_{PSDCM0}/ T_{PHDCM0}	No Delay Global Clock and IFF(2) with DCM in Source-Synchronous Mode	XC6SLX4	0.71/0.65	N/A	0.72/1.22	1.58/1.18	ns
		XC6SLX9	0.71/0.69	0.71/1.19	0.72/1.36	1.58/1.18	ns
		XC6SLX16	0.86/0.52	0.92/0.57	1.04/0.60	1.02/1.06	ns
		XC6SLX25	0.84/0.58	0.90/0.59	1.01/0.59	1.58/1.07	ns
		XC6SLX25T	0.84/0.58	0.90/0.59	1.01/0.59	N/A	ns
		XC6SLX45	0.85/0.70	0.90/0.76	0.98/0.79	1.34/1.34	ns
		XC6SLX45T	0.85/0.70	0.90/0.76	0.98/0.79	N/A	ns
		XC6SLX75	1.00/0.62	1.06/0.63	1.15/0.63	1.65/1.46	ns
		XC6SLX75T	1.00/0.71	1.06/0.72	1.15/0.72	N/A	ns
		XC6SLX100	0.81/0.68	0.81/0.69	0.94/0.69	1.42/2.07	ns
		XC6SLX100T	0.81/0.68	0.81/0.69	0.94/0.69	N/A	ns
		XC6SLX150	0.68/0.98	0.69/0.99	0.79/0.99	1.45/1.60	ns
		XC6SLX150T	0.68/0.98	0.69/0.99	0.79/0.99	N/A	ns
		XA6SLX4	0.81/0.74	N/A	0.72/1.36	N/A	ns
		XA6SLX9	0.81/0.74	N/A	0.72/1.36	N/A	ns
		XA6SLX16	1.01/0.56	N/A	1.04/0.60	N/A	ns
		XA6SLX25	0.94/0.76	N/A	1.06/0.77	N/A	ns
		XA6SLX25T	0.94/0.76	N/A	1.14/0.77	N/A	ns
		XA6SLX45	0.86/0.74	N/A	0.98/0.78	N/A	ns
		XA6SLX45T	0.86/0.74	N/A	0.98/0.78	N/A	ns
		XA6SLX75	1.02/0.71	N/A	1.15/0.72	N/A	ns
		XA6SLX75T	1.02/0.71	N/A	1.15/0.72	N/A	ns
		XA6SLX100	N/A	N/A	1.37/0.75	N/A	ns
		XQ6SLX75	N/A	N/A	1.15/0.72	1.65/1.46	ns
		XQ6SLX75T	1.02/0.71	N/A	1.15/0.72	N/A	ns
		XQ6SLX150	N/A	N/A	0.79/1.15	1.45/1.60	ns
		XQ6SLX150T	0.73/1.15	N/A	0.79/1.15	N/A	ns

Notes:
1. Setup and Hold times are measured over worst case conditions (process, voltage, temperature). Setup time is measured relative to the Global Clock input signal using the slowest process, highest temperature, and lowest voltage. Hold time is measured relative to the Global Clock input signal using the fastest process, lowest temperature, and highest voltage. These measurements include DCM CLK0 jitter.
2. IFF = Input Flip-Flop or Latch
3. Use IBIS to determine any duty-cycle distortion incurred using various standards.

Table 74: **Global Clock Setup and Hold With PLL in System-Synchronous Mode**

Symbol	Description	Device	Speed Grade				Units
			-3	-3N	-2	-1L	
Input Setup and Hold Time Relative to Global Clock Input Signal for LVCMOS25 Standard.(1)							
T_{PSPLL}/ T_{PHPLL}	No Delay Global Clock and IFF(2) with PLL in System-Synchronous Mode	XC6SLX4	1.37/0.25	N/A	1.52/0.41	2.07/0.69	ns
		XC6SLX9	1.37/0.21	1.48/0.21	1.52/0.26	2.07/0.69	ns
		XC6SLX16	1.33/–0.03	1.53/–0.02	1.60/–0.02	1.57/0.48	ns
		XC6SLX25	1.65/0.28	1.71/0.28	1.91/0.28	2.44/0.76	ns
		XC6SLX25T	1.65/0.28	1.71/0.28	1.91/0.28	N/A	ns
		XC6SLX45	1.55/0.18	1.64/0.18	1.75/0.18	2.02/0.90	ns
		XC6SLX45T	1.55/0.18	1.64/0.18	1.75/0.18	N/A	ns
		XC6SLX75	1.77/0.21	1.89/0.21	2.13/0.21	2.46/0.53	ns
		XC6SLX75T	1.77/0.21	1.89/0.21	2.13/0.21	N/A	ns
		XC6SLX100	1.44/0.32	1.52/0.32	1.70/0.32	1.78/0.86	ns
		XC6SLX100T	1.44/0.32	1.52/0.32	1.70/0.32	N/A	ns
		XC6SLX150	1.39/0.49	1.48/0.49	1.67/0.49	1.94/0.94	ns
		XC6SLX150T	1.39/0.49	1.48/0.49	1.67/0.49	N/A	ns
		XA6SLX4	1.61/0.10	N/A	1.64/0.28	N/A	ns
		XA6SLX9	1.61/0.10	N/A	1.64/0.28	N/A	ns
		XA6SLX16	1.89/–0.08	N/A	1.72/–0.08	N/A	ns
		XA6SLX25	1.85/0.16	N/A	2.08/0.16	N/A	ns
		XA6SLX25T	1.85/0.16	N/A	2.17/0.16	N/A	ns
		XA6SLX45	1.58/0.07	N/A	1.87/0.03	N/A	ns
		XA6SLX45T	1.58/0.07	N/A	1.87/0.03	N/A	ns
		XA6SLX75	1.80/0.06	N/A	2.25/0.06	N/A	ns
		XA6SLX75T	1.80/0.06	N/A	2.25/0.06	N/A	ns
		XA6SLX100	N/A	N/A	2.34/0.14	N/A	ns
		XQ6SLX75	N/A	N/A	2.25/0.06	2.46/0.53	ns
		XQ6SLX75T	1.80/0.06	N/A	2.25/0.06	N/A	ns
		XQ6SLX150	N/A	N/A	1.79/0.37	1.94/0.94	ns
		XQ6SLX150T	1.43/0.37	N/A	1.79/0.37	N/A	ns

Notes:
1. Setup and Hold times are measured over worst case conditions (process, voltage, temperature). Setup time is measured relative to the Global Clock input signal using the slowest process, highest temperature, and lowest voltage. Hold time is measured relative to the Global Clock input signal using the fastest process, lowest temperature, and highest voltage. These measurements include PLL CLKOUT0 jitter.
2. IFF = Input Flip-Flop or Latch
3. Use IBIS to determine any duty-cycle distortion incurred using various standards.

Table 75: **Global Clock Setup and Hold With PLL in Source-Synchronous Mode**

Symbol	Description	Device	Speed Grade				Units
			-3	-3N	-2	-1L	
Input Setup and Hold Time Relative to Global Clock Input Signal for LVCMOS25 Standard.(1)							
T_{PSPLL0}/ T_{PHPLL0}	No Delay Global Clock and IFF(2) with PLL in Source-Synchronous Mode	XC6SLX4	0.47/1.08	N/A	0.47/1.60	1.15/1.68	ns
		XC6SLX9	0.47/1.08	0.47/1.35	0.47/1.60	1.15/1.68	ns
		XC6SLX16	0.37/0.75	0.37/0.82	0.51/0.94	0.57/1.31	ns
		XC6SLX25	0.69/1.06	0.69/1.06	0.69/1.06	1.86/1.67	ns
		XC6SLX25T	0.69/1.06	0.69/1.06	0.69/1.06	N/A	ns
		XC6SLX45	0.57/1.05	0.65/1.10	0.65/1.18	1.02/1.65	ns
		XC6SLX45T	0.57/1.06	0.65/1.10	0.65/1.18	N/A	ns
		XC6SLX75	0.86/1.04	0.87/1.04	0.90/1.04	1.34/1.55	ns
		XC6SLX75T	0.86/1.04	0.87/1.04	0.90/1.04	N/A	ns
		XC6SLX100	0.53/1.13	0.54/1.13	0.55/1.13	0.89/2.39	ns
		XC6SLX100T	0.53/1.13	0.54/1.13	0.55/1.13	N/A	ns
		XC6SLX150	0.50/1.31	0.51/1.31	0.52/1.31	1.02/1.72	ns
		XC6SLX150T	0.50/1.31	0.51/1.31	0.52/1.31	N/A	ns
		XA6SLX4	0.71/0.93	N/A	0.62/1.47	N/A	ns
		XA6SLX9	0.71/0.93	N/A	0.62/1.47	N/A	ns
		XA6SLX16	0.92/0.69	N/A	0.63/0.82	N/A	ns
		XA6SLX25	0.99/0.94	N/A	0.96/0.94	N/A	ns
		XA6SLX25T	0.99/0.94	N/A	1.04/0.94	N/A	ns
		XA6SLX45	0.63/1.02	N/A	0.72/1.05	N/A	ns
		XA6SLX45T	0.63/1.02	N/A	0.72/1.05	N/A	ns
		XA6SLX75	0.88/0.89	N/A	1.02/0.89	N/A	ns
		XA6SLX75T	0.88/0.89	N/A	1.02/0.89	N/A	ns
		XA6SLX100	N/A	N/A	1.25/0.96	N/A	ns
		XQ6SLX75	N/A	N/A	1.02/0.89	1.34/1.55	ns
		XQ6SLX75T	0.88/0.89	N/A	1.02/0.89	N/A	ns
		XQ6SLX150	N/A	N/A	0.63/1.19	1.02/1.72	ns
		XQ6SLX150T	0.60/1.19	N/A	0.63/1.19	N/A	ns

Notes:
1. Setup and Hold times are measured over worst case conditions (process, voltage, temperature). Setup time is measured relative to the Global Clock input signal using the slowest process, highest temperature, and lowest voltage. Hold time is measured relative to the Global Clock input signal using the fastest process, lowest temperature, and highest voltage. These measurements include PLL CLKOUT0 jitter.
2. IFF = Input Flip-Flop or Latch
3. Use IBIS to determine any duty-cycle distortion incurred using various standards.

Table 76: **Global Clock Setup and Hold With DCM and PLL in System-Synchronous Mode**

Symbol	Description	Device	Speed Grade				Units
			-3	-3N	-2	-1L	
Input Setup and Hold Time Relative to Global Clock Input Signal for LVCMOS25 Standard.(1)							
$T_{PSDCMPLL}$/ $T_{PHDCMPLL}$	No Delay Global Clock and IFF(2) with DCM in System-Synchronous Mode and PLL in DCM2PLL Mode.	XC6SLX4	1.16/0.49	N/A	1.39/0.49	2.36/0.59	ns
		XC6SLX9	1.16/0.44	1.37/0.44	1.39/0.44	2.36/0.59	ns
		XC6SLX16	1.44/–0.08	1.49/–0.04	1.62/–0.04	2.06/0.55	ns
		XC6SLX25	1.52/0.42	1.65/0.42	1.83/0.42	2.52/0.43	ns
		XC6SLX25T	1.52/0.42	1.65/0.42	1.83/0.42	N/A	ns
		XC6SLX45	1.54/0.39	1.59/0.39	1.75/0.39	2.48/0.76	ns
		XC6SLX45T	1.54/0.39	1.59/0.39	1.75/0.39	N/A	ns
		XC6SLX75	1.72/0.41	1.80/0.41	1.99/0.41	2.60/0.75	ns
		XC6SLX75T	1.72/0.41	1.80/0.41	1.99/0.41	N/A	ns
		XC6SLX100	1.34/0.51	1.46/0.51	1.64/0.51	2.12/0.90	ns
		XC6SLX100T	1.34/0.51	1.46/0.51	1.64/0.51	N/A	ns
		XC6SLX150	1.30/0.60	1.40/0.60	1.55/0.60	2.57/0.97	ns
		XC6SLX150T	1.30/0.60	1.40/0.60	1.55/0.60	N/A	ns
		XA6SLX4	1.58/0.37	N/A	1.58/0.37	N/A	ns
		XA6SLX9	1.58/0.37	N/A	1.58/0.37	N/A	ns
		XA6SLX16	2.67/0.35	N/A	2.67/0.17	N/A	ns
		XA6SLX25	1.74/0.27	N/A	1.95/0.27	N/A	ns
		XA6SLX25T	1.74/0.27	N/A	2.03/0.27	N/A	ns
		XA6SLX45	1.58/0.29	N/A	1.87/0.29	N/A	ns
		XA6SLX45T	1.58/0.29	N/A	1.87/0.29	N/A	ns
		XA6SLX75	1.74/0.24	N/A	2.11/0.24	N/A	ns
		XA6SLX75T	1.74/0.24	N/A	2.11/0.24	N/A	ns
		XA6SLX100	N/A	N/A	2.64/0.82	N/A	ns
		XQ6SLX75	N/A	N/A	2.11/0.24	2.60/0.75	ns
		XQ6SLX75T	1.74/0.24	N/A	2.11/0.24	N/A	ns
		XQ6SLX150	N/A	N/A	1.67/0.70	2.57/0.97	ns
		XQ6SLX150T	1.50/0.70	N/A	1.67/0.70	N/A	ns

Notes:
1. Setup and Hold times are measured over worst case conditions (process, voltage, temperature). Setup time is measured relative to the Global Clock input signal using the slowest process, highest temperature, and lowest voltage. Hold time is measured relative to the Global Clock input signal using the fastest process, lowest temperature, and highest voltage. These measurements include CMT jitter; DCM CLK0 driving PLL, PLL CLKOUT0 driving BUFG.
2. IFF = Input Flip-Flop or Latch
3. Use IBIS to determine any duty-cycle distortion incurred using various standards.

Table 77: **Global Clock Setup and Hold With DCM and PLL in Source-Synchronous Mode**

Symbol	Description	Device	Speed Grade				Units
			-3	-3N	-2	-1L	
Example Data Input Set-Up and Hold Times Relative to a Forwarded Clock Input Pin,(1) Using DCM, PLL, and Global Clock Buffer for the LVCMOS25 standard.							
$T_{PSDCMPLL_0}$/ $T_{PHDCMPLL_0}$	No Delay Global Clock and IFF(2) with DCM in Source-Synchronous Mode and PLL in DCM2PLL Mode.	XC6SLX4	0.43/1.07	N/A	0.43/1.43	1.10/1.67	ns
		XC6SLX9	0.43/1.03	0.45/1.14	0.45/1.43	1.10/1.67	ns
		XC6SLX16	0.74/0.93	0.74/1.12	0.74/1.21	0.77/1.35	ns
		XC6SLX25	0.67/1.02	0.76/1.11	0.84/1.18	1.23/1.46	ns
		XC6SLX25T	0.67/1.02	0.76/1.11	0.84/1.18	N/A	ns
		XC6SLX45	0.65/0.99	0.65/1.04	0.71/1.12	1.18/1.58	ns
		XC6SLX45T	0.65/1.00	0.65/1.04	0.71/1.12	N/A	ns
		XC6SLX75	0.86/1.01	0.88/1.06	0.94/1.14	1.29/1.67	ns
		XC6SLX75T	0.86/1.01	0.88/1.06	0.94/1.14	N/A	ns
		XC6SLX100	0.50/1.10	0.56/1.10	0.61/1.17	0.84/2.24	ns
		XC6SLX100T	0.50/1.10	0.56/1.10	0.61/1.17	N/A	ns
		XC6SLX150	0.45/1.28	0.47/1.28	0.52/1.28	1.27/1.56	ns
		XC6SLX150T	0.45/1.28	0.47/1.28	0.52/1.28	N/A	ns
		XA6SLX4	0.74/1.00	N/A	0.74/1.43	N/A	ns
		XA6SLX9	0.74/1.00	N/A	0.74/1.43	N/A	ns
		XA6SLX16	1.81/1.15	N/A	1.81/1.03	N/A	ns
		XA6SLX25	0.89/1.01	N/A	0.96/1.05	N/A	ns
		XA6SLX25T	0.89/1.01	N/A	1.04/1.15	N/A	ns
		XA6SLX45	0.69/0.95	N/A	0.83/0.96	N/A	ns
		XA6SLX45T	0.69/0.95	N/A	0.83/0.96	N/A	ns
		XA6SLX75	0.88/0.94	N/A	1.06/0.96	N/A	ns
		XA6SLX75T	0.88/0.94	N/A	1.06/0.96	N/A	ns
		XA6SLX100	N/A	N/A	1.55/1.33	N/A	ns
		XQ6SLX75	N/A	N/A	1.06/0.96	1.29/1.67	ns
		XQ6SLX75T	0.88/0.94	N/A	1.06/0.96	N/A	ns
		XQ6SLX150	N/A	N/A	0.64/1.30	1.27/1.56	ns
		XQ6SLX150T	0.58/1.30	N/A	0.64/1.30	N/A	ns

Notes:

1. Setup and Hold times are measured over worst case conditions (process, voltage, temperature). Setup time is measured relative to the Global Clock input signal using the slowest process, highest temperature, and lowest voltage. Hold time is measured relative to the Global Clock input signal using the fastest process, lowest temperature, and highest voltage. The timing values were measured using the fine-phase adjustment feature of the DCM. These measurements include CMT jitter; DCM CLK0 driving PLL, PLL CLKOUT0 driving BUFG. Package skew is not included in these measurements.
2. IFF = Input Flip-Flop

Source-Synchronous Switching Characteristics

The parameters in this section provide the necessary values for calculating timing budgets for Spartan-6 FPGA source-synchronous transmitter and receiver data-valid windows.

Table 78: **Duty Cycle Distortion and Clock-Tree Skew**

Symbol	Description	Device[1]	Speed Grade				Units
			-3	-3N	-2	-1L	
T_{DCD_CLK}	Global Clock Tree Duty Cycle Distortion[2]	LX4	0.20	N/A	0.20	0.35	ns
		LX9	0.20	0.20	0.20	0.35	ns
		LX16	0.20	0.20	0.20	0.35	ns
		LX25	0.20	0.20	0.20	0.35	ns
		LX25T	0.20	0.20	0.20	N/A	ns
		LX45	0.20	0.20	0.20	0.35	ns
		LX45T	0.20	0.20	0.20	N/A	ns
		LX75	0.20	0.20	0.20	0.35	ns
		LX75T	0.20	0.20	0.20	N/A	ns
		LX100	0.20	0.20	0.20	0.35	ns
		LX100T	0.20	0.20	0.20	N/A	ns
		LX150	0.35	0.35	0.35	0.35	ns
		LX150T	0.35	0.35	0.35	N/A	ns
T_{CKSKEW}	Global Clock Tree Skew[3]	LX4	0.25	N/A	0.25	0.29	ns
		LX9	0.25	0.25	0.25	0.29	ns
		LX16	0.15	0.15	0.15	0.22	ns
		LX25	0.26	0.26	0.26	0.41	ns
		LX25T	0.26	0.26	0.26	N/A	ns
		LX45	0.20	0.20	0.20	0.28	ns
		LX45T	0.20	0.20	0.20	N/A	ns
		LX75	0.56	0.56	0.56	0.50	ns
		LX75T	0.56	0.56	0.56	N/A	ns
		XC6SLX100[4]	0.22	0.22	0.22	0.21	ns
		XA6SLX100[4]	N/A	N/A	0.43	N/A	ns
		LX100T	0.22	0.22	0.22	N/A	ns
		LX150	0.48	0.48	0.48	0.35	ns
		LX150T	0.48	0.48	0.48	N/A	ns
T_{DCD_BUFIO2}	I/O clock tree duty cycle distortion	LX devices	0.25	0.25	0.25	0.50	ns
		LXT devices	0.25	0.25	0.25	N/A	ns

Table 78: **Duty Cycle Distortion and Clock-Tree Skew *(Cont'd)***

Symbol	Description	Device[1]	Speed Grade				Units
			-3	-3N	-2	-1L	
$T_{BUFIOSKEW}$	I/O clock tree skew across one clock region	LX4	0.06	N/A	0.06	0.07	ns
		LX9	0.06	0.06	0.06	0.07	ns
		LX16	0.06	0.06	0.06	0.07	ns
		LX25	0.06	0.06	0.06	0.07	ns
		LX25T	0.06	0.06	0.06	N/A	ns
		LX45	0.06	0.06	0.06	0.07	ns
		LX45T	0.06	0.06	0.06	N/A	ns
		LX75	0.06	0.06	0.06	0.07	ns
		LX75T	0.06	0.06	0.06	N/A	ns
		LX100	0.06	0.06	0.06	0.07	ns
		LX100T	0.06	0.06	0.06	N/A	ns
		LX150	0.06	0.06	0.06	0.07	ns
		LX150T	0.06	0.06	0.06	N/A	ns

Notes:
1. LXT devices are not available with a -1L speed grade. The LX4 is not available in -3N speed grade.
2. These parameters represent the worst-case duty cycle distortion observable at the pins of the device using LVDS output buffers. For cases where other I/O standards are used, IBIS can be used to calculate any additional duty cycle distortion that might be caused by asymmetrical rise/fall times.
3. The T_{CKSKEW} value represents the worst-case clock-tree skew observable between sequential I/O elements. Significantly less clock-tree skew exists for I/O registers that are close to each other and fed by the same or adjacent clock-tree branches. Use the Xilinx FPGA Editor and Timing Analyzer tools to evaluate clock skew specific to your application.
4. The T_{CKSKEW} is 0.43 ns for the XA6SLX100 device using a -2 speed grade and 0.22 ns for the XC6SLX100 devices using the -2 speed grade.

Table 79: **Package Skew**

Symbol	Description	Device	Package[2]	Value	Units
$T_{PKGSKEW}$	Package Skew[1]	LX4	TQG144	N/A	ps
			CPG196	23	ps
			CSG225	58	ps
		LX9	TQG144	N/A	ps
			CPG196	23	ps
			CSG225	58	ps
			FT(G)256	88	ps
			CSG324	64	ps
		LX16	CPG196	19	ps
			CSG225	70	ps
			FT(G)256	71	ps
			CSG324	54	ps
		LX25	FT(G)256	90	ps
			CSG324	61	ps
			FG(G)484	84	ps
		LX25T	CSG324	48	ps
			FG(G)484	112	ps

Table 79: **Package Skew *(Cont'd)***

Symbol	Description	Device	Package[2]	Value	Units
$T_{PKGSKEW}$	Package Skew[1]	LX45	CSG324	70	ps
			CS(G)484	99	ps
			FG(G)484	109	ps
			FG(G)676	138	ps
		LX45T	CSG324	75	ps
			CS(G)484	100	ps
			FG(G)484	95	ps
		LX75	CS(G)484	101	ps
			FG(G)484	107	ps
			FG(G)676	161	ps
		LX75T	CS(G)484	107	ps
			FG(G)484	110	ps
			FG(G)676	134	ps
		LX100	CS(G)484	95	ps
			FG(G)484	155	ps
			FG(G)676	144	ps
		LX100T	CS(G)484	88	ps
			FG(G)484	111	ps
			FG(G)676	147	ps
			FG(G)900	134	ps
		LX150	CS(G)484	84	ps
			FG(G)484	103	ps
			FG(G)676	115	ps
			FG(G)900	121	ps
		LX150T	CS(G)484	83	ps
			FG(G)484	88	ps
			FG(G)676	141	ps
			FG(G)900	120	ps

Notes:
1. These values represent the worst-case skew between any two SelectIO resources in the package: shortest delay to longest delay from Pad to Ball.
2. Some of the devices are available in both Pb and Pb-free (additional G) packages as standard ordering options. See DS160: *Spartan-6 Family Overview* for more information.

Table 80: **Sample Window**

Symbol	Description	Device[1]	Speed Grade				Units
			-3	-3N	-2	-1L	
T_{SAMP}	Sampling Error at Receiver Pins[2]	All	510	510	530	740	ps
T_{SAMP_BUFIO2}	Sampling Error at Receiver Pins using BUFIO2[3]	All	430	430	450	590	ps

Notes:
1. LXT devices are not available with a -1L speed grade.
2. This parameter indicates the total sampling error of Spartan-6 FPGA DDR input registers, measured across voltage, temperature, and process. The characterization methodology uses the DCM to capture the DDR input registers' edges of operation. These measurements include:
   - CLK0 DCM jitter
   - DCM accuracy (phase offset)
   - DCM phase shift resolution

   These measurements do not include package or clock tree skew.
3. This parameter indicates the total sampling error of Spartan-6 FPGA DDR input registers, measured across voltage, temperature, and process. The characterization methodology uses the BUFIO2 clock network and IODELAY2 to capture the DDR input registers' edges of operation. These measurements do not include package or clock tree skew.

Table 81: **Source-Synchronous Pin-to-Pin Setup/Hold and Clock-to-Out Using BUFIO2**

Symbol	Description	Device	Speed Grade				Units
			-3	-3N	-2	-1L	
Data Input Setup and Hold Times Relative to a Forwarded Clock Input Pin Using BUFIO2							
T_{PSCS}/T_{PHCS}	IFF setup/hold using BUFIO2 clock	XC6SLX4	0.57/0.94	N/A	0.95/1.12	0.27/1.56	ns
		XC6SLX9	0.40/0.95	0.50/0.96	0.60/1.12	0.27/1.56	ns
		XC6SLX16	0.48/0.74	0.55/0.75	0.69/0.83	1.27/1.31	ns
		XC6SLX25	0.28/1.02	0.28/1.12	0.28/1.24	0.15/1.78	ns
		XC6SLX25T	0.28/1.02	0.28/1.12	0.28/1.24	N/A	ns
		XC6SLX45	0.42/1.19	0.44/1.29	0.50/1.40	0.12/1.83	ns
		XC6SLX45T	0.42/1.19	0.44/1.29	0.50/1.40	N/A	ns
		XC6SLX75	0.38/1.48	0.38/1.63	0.38/1.84	0.05/2.78	ns
		XC6SLX75T	0.38/1.48	0.38/1.63	0.38/1.84	N/A	ns
		XC6SLX100	0.06/1.48	0.06/1.63	0.06/1.87	–0.03/2.72	ns
		XC6SLX100T	0.06/1.48	0.06/1.63	0.06/1.87	N/A	ns
		XC6SLX150	0.04/1.73	0.04/1.75	0.04/1.98	–0.08/3.07	ns
		XC6SLX150T	0.04/1.73	0.04/1.75	0.04/1.98	N/A	ns
		XA6SLX4	0.64/0.96	N/A	0.97/1.12	N/A	ns
		XA6SLX9	0.44/0.99	N/A	0.62/1.16	N/A	ns
		XA6SLX16	0.50/0.78	N/A	0.69/0.83	N/A	ns
		XA6SLX25	0.28/1.04	N/A	0.28/1.25	N/A	ns
		XA6SLX25T	0.28/1.04	N/A	0.28/1.25	N/A	ns
		XA6SLX45	0.43/1.21	N/A	0.50/1.40	N/A	ns
		XA6SLX45T	0.43/1.21	N/A	0.50/1.40	N/A	ns
		XA6SLX75	0.38/1.49	N/A	0.38/1.84	N/A	ns
		XA6SLX75T	0.38/1.49	N/A	0.38/1.84	N/A	ns
		XA6SLX100	N/A	N/A	1.01/1.63	N/A	ns
		XQ6SLX75	N/A	N/A	0.38/1.84	0.05/2.78	ns
		XQ6SLX75T	0.38/1.49	N/A	0.38/1.84	N/A	ns
		XQ6SLX150	N/A	N/A	0.04/1.98	–0.08/3.07	ns
		XQ6SLX150T	0.04/1.75	N/A	0.04/1.98	N/A	ns

Table 81: **Source-Synchronous Pin-to-Pin Setup/Hold and Clock-to-Out Using BUFIO2 *(Cont'd)***

Symbol	Description	Device	Speed Grade				Units
			-3	-3N	-2	-1L	
Pin-to-Pin Clock-to-Out Using BUFIO2							
$T_{ICKOFCS}$	OFF clock-to-out using BUFIO2 clock	XC6SLX4	5.51	N/A	6.95	8.45	ns
		XC6SLX9	5.51	5.89	6.95	8.45	ns
		XC6SLX16	5.31	5.70	6.67	8.21	ns
		XC6SLX25	5.53	6.00	7.02	8.72	ns
		XC6SLX25T	5.53	6.00	7.02	N/A	ns
		XC6SLX45	5.76	6.18	7.22	8.77	ns
		XC6SLX45T	5.76	6.18	7.22	N/A	ns
		XC6SLX75	5.94	6.46	7.57	9.72	ns
		XC6SLX75T	5.94	6.46	7.57	N/A	ns
		XC6SLX100	6.09	6.53	7.60	9.66	ns
		XC6SLX100T	6.09	6.53	7.60	N/A	ns
		XC6SLX150	6.29	6.69	7.81	9.94	ns
		XC6SLX150T	6.29	6.69	7.81	N/A	ns
		XA6SLX4	5.83	N/A	6.95	N/A	ns
		XA6SLX9	5.83	N/A	6.95	N/A	ns
		XA6SLX16	5.65	N/A	6.68	N/A	ns
		XA6SLX25	5.85	N/A	7.03	N/A	ns
		XA6SLX25T	5.85	N/A	7.03	N/A	ns
		XA6SLX45	6.07	N/A	7.25	N/A	ns
		XA6SLX45T	6.07	N/A	7.25	N/A	ns
		XA6SLX75	6.26	N/A	7.57	N/A	ns
		XA6SLX75T	6.26	N/A	7.57	N/A	ns
		XA6SLX100	N/A	N/A	7.48	N/A	ns
		XQ6SLX75	N/A	N/A	7.57	9.72	ns
		XQ6SLX75T	6.26	N/A	7.57	N/A	ns
		XQ6SLX150	N/A	N/A	7.81	9.94	ns
		XQ6SLX150T	6.62	N/A	7.81	N/A	ns

Revision History

The following table shows the revision history for this document.

Date	Version	Description of Revisions
06/24/09	1.0	Initial Xilinx release.
08/26/09	1.1	Added V_{FS} to Table 1and Table 2. Added R_{FUSE} to Table 2. Added XC6SLX75 and XC6SLX75T to V_{BATT} and I_{BATT} in Table 1, Table 2, and Table 4. Corrected the quiescent supply current for the XC6SLX4 in Table 5. Updated Table 11. Removed DV_{PPIN} from Figure 2. Removed $F_{PCIECORE}$ from Table 24 and added values to $F_{PCIEUSER}$. Added more networking applications to Table 25. Updated values for $T_{SUSPENDLOW_AWAKE}$, $T_{SUSPEND_ENABLE}$, and T_{SCP_AWAKE} in Table 46. Numerous changes to Table 47, page 54 including the addition of new values to various specifications, revising the $T_{SMCKCSO}$ description, and changing the units of T_{POR}. Also, removed *Dynamic Reconfiguration Port (DRP) for DCM and PLL Before and After DCLK section* from Table 47 and updated all the notes. In Table 52, added to F_{INMAX}, revised F_{OUTMAX}, and removed PLL Maximum Output Frequency for BUFIO2. Revised values for DCM_DELAY_STEP in Table 54. Updated CLKIN_FREQ_FX values in Table 55.
01/04/10	1.2	Added -4 speed grade to entire document. Updated speed specification of -4, -3, -2 speed grades to version 1.03. Added -1L speed grade numbers per speed specification 1.00. Updated T_{SOL} in Table 1. Added -1L rows for LVCMOS12, LVCMOS15, and LVCMOS18 in Table 9. Revised much of the detail in GTP Transceiver Specifications in Table 12 through Table 23. Added -2 data to Table 25. Updated F_{MAX} in Table 44. Updated descriptions for $T_{DNACLKL}$ and $T_{DNACLKH}$ in Table 45 and revised values for all parameters. Removed $T_{INITADDR}$ from Table 47 and added new data. Updated values in Table 48 through Table 62. Added Table 51 (BUFPLL) and Table 57 (DCM_CLKGEN). Removed $T_{LOCKMAX}$ note from Table 52. Updated note 3 in Table 53. In Table 79: removed XC6SLX75CSG324 and XC6SLX75TCSG324; added XC6SLX75FG(G)484 and XC6SLX75FG(G)484.
02/22/10	1.3	Production release of XC6SLX16 -2 speed grade devices. The changes to Table 26 and Table 27 includes updating this data sheet to the data in ISE v11.5 software with speed specification v1.06. Updated maximum of V_{IN} and V_{TS} and note 2 in Table 1. In Table 2, changed V_{IN}, added I_{IN} and note 5, revised notes 1, 6, and 7, and added note 8 to R_{FUSE}. In Table 4, removed previous note 1 and added data to I_{RPU}, I_{RPD}, and I_{BATT}, changed C_{IN}, added R_{DT} and R_{IN_TERM}, and added note 2 and 3. Updated V_{CCO2} in Table 6. Added Table 7 and Table 8. Removed PCI66_3 from Table 9. Updated PCI33_3 and I2C in Table 9. Updated the description of Table 11. Completely updated Table 25. Updated Table 28 including adding values for PCI33_3. Updated V_{REF} value for HSTL_III_18 in Table 31. Updates missing V_{REF} values in Table 32. Added Simultaneously Switching Outputs, page 36. Removed T_{GSRQ} and T_{RPW} from Table 35 and Table 36. Also removed T_{DOQ} from Table 36. Removed T_{ISDO_DO} and note 1 from Table 37. Removed T_{OSCCK_S} and combinatorial section from Table 38. In Table 39, removed T_{IODDO_T} and added new tap parameters and note 2. In Table 40, Table 41, and Table 42, made typographical edits and removed notes. Removed clock CLK section in Table 41. Removed clock CLK section and T_{REG_MUX} and T_{REG_M31} in Table 42. Added block RAM F_{MAX} values to Table 43. Updated values and added note 2 to Table 45. Added values to Table 46 and removed note 1. Numerous changes to Table 47. Completely updated Table 57. Revised data in Table 62. Removed note 3 from Table 71. Added values to Table 79. Added data to Table 80 and Table 81.
03/10/10	1.4	Production release of XC6SLX45 -2 speed grade devices, which includes changes to Table 26 and Table 27 updating this data sheet to the data in ISE v11.5 software with speed specification v1.07. Fixed R_{IN_TERM} description in Table 4. Added PCI66_3 to Table 7 and replaced note 1. Corrected note 1 and the V, Max for TMDS_33 in Table 8. In Table 10, added note 1 to LVPECL_33 and TMDS_33. Also updated specifications for TMDS_33. Updated the GTP Transceiver Specifications section including adding values to Table 16, Table 17, and Table 20 through Table 23. Added PCI66_3 back into Table 9, Table 28, Table 31, Table 32, and Table 34. Updated note 3 on Table 32. In Table 34, corrected some typographical errors and fixed SSO limits for bank1/3 in FG(G)484 package. Corrected T_{OSCKC_OCE} in Table 38. In Table 57, updated CLKFX_FREEZE_VAR and CLKFX_FREEZE_TEMP_SLOPE and added typical values to $T_{CENTER_LOW_SPREAD}$ and $T_{CENTER_HIGH_SPREAD}$. Updated and added values to Table 63 through Table 78, and Table 81. In Table 79, revised the XC6SLX16-CSG324 and the XC6SLX45-CSG484 and FG(G)484 values.

Date	Version	Description of Revisions
06/14/10	1.5	In Table 2, added note 5 and added temperature range to V_{FS} and R_{FUSE}. Removed speed grade delineation, revised I_{RPD} description, and updated note 2 in Table 4. Added note 2 to Table 7. Added DIFF_MOBILE_DDR to Table 8 and Table 10. Added note 4 to Table 15. Changed minimum DV_{PPIN} in Table 16. Updated $F_{GTPDRPCLK}$ in Table 19. Increased maximum T_{LLSKEW} in Table 22. Updated descriptions and added data to Table 23. Removed note 1 and added new data to the Networking Applications section in Table 25. Updated Table 26 and Table 27 to the data in ISE v12.1 software with speed specification v1.08. In Table 28, added DIFF_MOBILE_DDR and updated -4 speed grade data. Updated the maximum I/O pairs per bank in Table 33. Updated note 2 on Table 39. Revised the F_{MAX} in Table 44. In Table 47, updated description for $T_{SMCKCSO}$, revised values for T_{POR} and added Min value, added $T_{BPIICCK}$ and $T_{SPIICCK}$. Also in Table 47, added device dependencies to F_{SMCCK} and F_{RBCCK}. Updated and added data to Table 63 through Table 78, and Table 81. In Table 79, added data on the XC6SLX45-FG(G)676 and revised the XC6SLX45T and XC6SLX150T values. The following changes to this specification are addressed in the product change notice XCN10024, *MCB Performance and JTAG Revision Code for Spartan-6 LX16 and LX45 FPGAs*. In Table 2, revised the V_{CCINT} to add the memory controller block extended performance specifications. In Table 25, changed the standard specifications and added extended performance specifications for the memory controller block and note 2. Added note 4 and updated values in Table 34.
06/24/10	1.6	Production release of XC6SLX45T (-2 and -3 speed grades), XC6SLX16 and XC6SLX45 (-3 speed grade) devices which includes changes to Table 26 and Table 27 (ISE v12.1 software with speed specification v1.08). Added the -3N speed grade, which designates Spartan-6 devices that do not support MCB functionality. This includes changes to Table 2 (note 2), Table 25 (note 4), and Switching Characteristics (Table 26). Updated Simultaneously Switching Outputs discussion. Added -3 speed grade values for T_{TAP} and F_{MINCAL} values in Table 39. In Table 40, updated T_{RPW} (-2 and -3 speed grade) values and F_{TOG} (-3 speed grade) values. In Table 48, updated T_{GIO} (-2 and -3 speed grade) values. Updated -3 values in spread spectrum section of Table 57.
07/16/10	1.7	Production release of specific devices listed in Table 26 and Table 27 using ISE v12.2 software with speed specification v1.11. Added note 4 advising designers of the patch which contains v1.11. Also updated the -1L speed specification to v1.04. Updated numerous -4 and -1L values. Added -4 T_{TAP} values and F_{MINCAL} to Table 39. Revised T_{CINCK}/T_{CKCIN} in Table 40. In Table 41, revised T_{SHCKO}. In Table 42, revised T_{REG}. Added new -1L values to Table 47. Added and updated values in Table 79.
07/26/10	1.8	Production release of XC6SLX25, XC6SLX25T, XC6SLX100 and XC6SLX100T in the specific speed grades listed in Table 26 and Table 27 using ISE v12.2 software with speed specification v1.11. Added note 7 to Table 2 and moved V_{FS} and R_{FUSE} to a new Table 3. Added I_{HS} and note 4 to Table 4. Added note 1 to Table 28. Added and updated SSO limits per V_{CCO}/GND pairs in Table 34. Added note 3 to Table 47. In Table 54, removed -1L specifications for CLKOUT_PER_JITT_DV1/2 and revised CLKIN_CLKFB_PHASE and CLKOUT_PHASE_DLL values. Updated note 3 in both Table 56 and Table 57.
08/23/10	1.9	Updated values for $F_{GTPRANGE1}$, $F_{GTPRANGE2}$, and $F_{GPLLMIN}$ in Table 18. Revised -3 and -4 values in Table 21. Removed the -1L speed grade readback support restriction and note 3 in Table 47.
11/05/10	1.10	Production release of XC6SLX4 and XC6SLX9 in the specific speed grades listed in Table 26 and Table 27 using ISE v12.3 software with speed specification v1.12 for the -2 speed grade available in the 12.3 *Speed Files Patch*. Added note 3 advising designers of the patch which contains v1.12. In Table 2, added note 4. In Table 4, added note 2. In Table 10, added notes 2 and 3. In Table 44, added note 2. In Table 47, updated symbol for T_{SMWCCK}/T_{SMCCKW}, changed -1L values for $T_{USERCCLKH}$ and $T_{USERCCLKL}$, and added and revised the modes for F_{MCCK} and F_{SMCCK}. In Table 53, redefined and expanded description for CLKIN_FREQ_DLL and rewrote note 3. Updated title of Table 58. Also in Table 78, revised T_{DCD_CLK} for XC6SLX150 and XC6SLX150T. Changed description of T_{PSFD}/ T_{PHFD} in Table 71. For the -1L speed grade, updated data sheet to ISE 12.3 software with speed specification v1.05 which revised the values in the following tables: Table 25, Table 28, Table 35, Table 36, Table 37, Table 40 through Table 43, Table 48 through Table 56, Table 62 through Table 78, Table 80, and Table 81. Updated Notice of Disclaimer.

Date	Version	Description of Revisions
01/10/11	1.11	Production release of XC6SLX4 and XC6SLX9 in the specific speed grades listed in Table 26 and Table 27 using ISE v12.4 software with speed specification v1.15 for the -4, -3, -3N, and -2 speed grades. Added note 3 to Table 27. Also updated the -1L speed grade requirements to ISE v12.4 software with speed specification v1.06. Revised -3N definition throughout the document. Added note 4 to Table 2 and updated note 5. Added information on V_{CCINT} to note 1 in Table 5. Updated Networking Applications -3 values in Table 25 to match improvements made in ISE v12.4. In Table 28, added note 1 and revised the T_{IOTP} values for LVDS_33, LVDS_25, MINI_LVDS_33, MINI_LVDS_25, RSDS_33, RSDS_25, TMDS_33. PPDS_33, and PPDS_25. Added note 3 to Table 55.
02/11/11	1.12	As described in XCN11008: *Product Discontinuation Notice For Spartan-6 LXT -4 Devices*, the -4 speed specifications have been discontinued. As outlined in page 2 of the XCN, designers currently using -4 speed specifications should rerun timing analysis using the new -3 speed specifications before moving to a replacement device. Updated the networking applications section of Table 25. Updated -2 speed specifications throughout document and added note 3 to Table 27 advising designers to use the -2 speed specification update (v1.17) with the ISE 12.4 software patch. Added F_{CLKDIV} to Table 37 and Table 38. Updated note 2 in Table 39. Updated units for $T_{SMCKCSO}$ and T_{BPICCO} in Table 47. Updated -1L in Table 71. Removed Note 2: *Package delay information is available for these device/package combinations. This information can be used to deskew the package* from Table 79.
03/31/11	2.0	Production release of XC6SLX45 in the -1L speed grades listed in Table 26 and Table 27 using ISE v13.1 software with -1L speed specification v1.06. In Table 39, removed values in the -1L column and added note 3 as IODELAY2 only supports Tap0 for lower-power devices. Updated copyright page 1 and Notice of Disclaimer.
05/20/11	2.1	Production release of XC6SLX100 and XC6SLX150 in the specific speed grades listed in Table 26 and Table 27 using ISE v13.1 software with -1L speed specification v1.06. Updated Table 27 and Note 7 with changes per XCN11012: *Speed File Change for -3N Devices*. Revised Switching Characteristics section for speed specifications: v1.18 for -3, -3N, and -2; including improvements in Table 73 through Table 77 and Table 81. Removed *Memory Controller Block* from the performance heading in Table 2 and revised Note 2. In Table 4, added Note 1 to C_{IN} and updated the description of R_{IN_TERM}. Updated Note 1 in Table 5. Updated Note 1 of Table 7. In Table 25, added and removed -1L specifications, increased the standard performance DDR3 specifications, removed the extended performance DDR3 row and updated Note 3 and Note 4. Clarified the introductory information for Table 28 and Table 30. In Table 32: Revised V_{MEAS} value for LVCMOS12; revised V_{REF} for LVDS_25, LVDS_33, BLVDS_25,MINI_LVDS_25, MINI_LVDS_33, RSDS_25, and RSDS_33; revised R_{REF} for BLVDS_25 and TMDS_33; and added Note 4 and Note 5. Updated Note 2 and Note 3 in Table 39. In Table 47, revised the values and description of T_{POR} including adding Note 3. Also in Table 47, augmented the description and added specifications for F_{RBCCK} and removed XC6SLX4 from F_{MCCK} (maximum frequency, parallel mode (Master SelectMAP/BPI). Added BUFGMUX to Table 48 title. Added Table 50. In Table 52, revised specifications for $T_{EXTFDVAR}$ and $F_{INJITTER}$. In Table 54 removed the 5 MHz < CLKIN_FREQ_DLL parameter in the LOCK_DLL description. In both Table 56 and Table 57, removed the 5 MHz < F_{CLKIN} parameter in the LOCK_FX description. In Table 58, updated description for PSCLK_FREQ and PSCLK_PULSE. Revised title and symbol of Table 70, added new speed specifications for -1L, and added Note 2. Added Table 71.
07/11/11	2.2	Added the Automotive XA Spartan-6 and Defense-grade Spartan-6Q devices to all appropriate tables while sometimes removing the XC6S nomenclature. Added expanded temperature range (Q) to all appropriate tables. Updated T_{SOL} packages in Table 1. Added R_{OUT_TERM} to Table 4. Updated Note 2 on Table 13. Production release of the XC6SLX4, XC6SLX9, XC6SLX16, XC6SLX25, XC6SLX75, XQ6SLX75, and XQ6SLX150 in Table 26 and Table 27 using ISE v13.2 software with -1L speed specification v1.07. Production release of the XA6SLX16, XA6SLX25T, XA6SLX45, XA6SLX45T, XQ6SLX75, XQ6SLX75T, XQ6SLX150, and XQ6SLX150T in Table 26 and Table 27 using ISE v13.2 software with -2 and -3 speed specification v1.19. Added Table 29: IOB Switching Characteristics for the Automotive XA Spartan-6 and the Spartan-6Q Devices(1). Updated CS(G)484 from CSG484 throughout data sheet. Clarified Note 3 in Table 39.
08/08/11	2.3	Production release of the XA6SLX25, XA6SLX75, and XA6SLX75T in Table 26 and Table 27 using ISE v13.2 software with -2 and -3 speed specification v1.19.

Date	Version	Description of Revisions
09/14/11	2.4	Production release of the XA6SLX4 and XA6SLX9 devices in Table 26 and Table 27 using ISE v13.2 software with -2 and -3 speed specification v1.19. Added production released version of the XA6SLX100 to Table 26 and Table 27 using ISE v13.3 software with -2 speed specification v1.20. Updated R_{OUT_TERM} description in Table 4. Fixed the LVPECL V_H error in Table 31. Updated introduction in Simultaneously Switching Outputs. Added the XA6SLX100 to Table 63 through Table 78, and Table 81. Added Note 4 to Table 78 because the T_{CKSKEW} for the XC6SLX100 is not the same as the T_{CKSKEW} for the XA6SLX100. Revised the revision history for version 1.6 dated 06/24/10. Removed the parenthetical statement about the -3N speed grade: (specifications are identical to the -3 speed grade).
10/17/11	3.0	Changed the data sheet from Preliminary Product Specification to Product Specification. Updated the Switching Characteristics, page 19 speed specification version ISE v13.3 software to -2 and -3 speed specification v1.20 and -1L speed specification of v1.08. Also updated Note 1 in Table 27. In Table 43, *Block RAM Switching Characteristics*, the F_{MAX} value for the -2 speed grade has been changed from 260 MHz to 280 MHz. In Table 54, *Switching Characteristics for the DLL*, a Note 6 was added and linked to CLKIN_CLKFB_PHASE.
06/27/14	3.1	Added definition of T_{SOL} to Note 6 in Table 1. Added maximum current condition through ground clamp diode to I_{IN} in Table 2. Added (HSWAPEN = 1) to I_{HS} in Table 4. Replaced XPOWER with Xilinx Power throughout. In Table 16, moved value of 1000 mV from Max to Min column and added sentence about DV_{PPOUT} being the minimum guaranteed value at the maximum setting to Note 1. Updated introductory paragraphs in Simultaneously Switching Outputs. Added Note 1 to Table 35. Added Note 1 to Table 36. Corrected Note 2 in Table 39 to say “Maximum tap delay.” Added alternate symbols to Table 45. In Table 48, updated symbols for T_{GSI} and T_{GIO} and added Note 1. Added Note 1 to Table 49. Updated descriptions of F_{INMAX} in Table 52. Replaced BUFG with BUFGMUX in Note 3 of Table 53 and Note 3 of Table 54. In Table 56, updated subheading to “Phase Alignment (Phase Error).” In Table 57, updated Note 6 and added Note 7.
01/30/15	3.1.1	Corrected table note reference in Table 52.

Notice of Disclaimer

The information disclosed to you hereunder (the "Materials") is provided solely for the selection and use of Xilinx products. To the maximum extent permitted by applicable law: (1) Materials are made available "AS IS" and with all faults, Xilinx hereby DISCLAIMS ALL WARRANTIES AND CONDITIONS, EXPRESS, IMPLIED, OR STATUTORY, INCLUDING BUT NOT LIMITED TO WARRANTIES OF MERCHANTABILITY, NON-INFRINGEMENT, OR FITNESS FOR ANY PARTICULAR PURPOSE; and (2) Xilinx shall not be liable (whether in contract or tort, including negligence, or under any other theory of liability) for any loss or damage of any kind or nature related to, arising under, or in connection with, the Materials (including your use of the Materials), including for any direct, indirect, special, incidental, or consequential loss or damage (including loss of data, profits, goodwill, or any type of loss or damage suffered as a result of any action brought by a third party) even if such damage or loss was reasonably foreseeable or Xilinx had been advised of the possibility of the same. Xilinx assumes no obligation to correct any errors contained in the Materials, or to advise you of any corrections or update. You may not reproduce, modify, distribute, or publicly display the Materials without prior written consent. Certain products are subject to the terms and conditions of the Limited Warranties which can be viewed at http://www.xilinx.com/warranty.htm; IP cores may be subject to warranty and support terms contained in a license issued to you by Xilinx. Xilinx products are not designed or intended to be fail-safe or for use in any application requiring fail-safe performance; you assume sole risk and liability for use of Xilinx products in Critical Applications: http://www.xilinx.com/warranty.htm#critapps.

AUTOMOTIVE APPLICATIONS DISCLAIMER

XILINX PRODUCTS ARE NOT DESIGNED OR INTENDED TO BE FAIL-SAFE, OR FOR USE IN ANY APPLICATION REQUIRING FAIL-SAFE PERFORMANCE, SUCH AS APPLICATIONS RELATED TO: (I) THE DEPLOYMENT OF AIRBAGS, (II) CONTROL OF A VEHICLE, UNLESS THERE IS A FAIL-SAFE OR REDUNDANCY FEATURE (WHICH DOES NOT INCLUDE USE OF SOFTWARE IN THE XILINX DEVICE TO IMPLEMENT THE REDUNDANCY) AND A WARNING SIGNAL UPON FAILURE TO THE OPERATOR, OR (III) USES THAT COULD LEAD TO DEATH OR PERSONAL INJURY. CUSTOMER ASSUMES THE SOLE RISK AND LIABILITY OF ANY USE OF XILINX PRODUCTS IN SUCH APPLICATIONS.

FPGAMALL
Authorized Distributor

OUR CERTIFICATE

A long-term cooperative relationship can be built between global customers and us by providing excellent products

Business Type	Trading Company, Distributor/Wholesaler
Main Products	Electronic Integrated Circuit
Certifications	ISO9001
Total Annual Revenue	US$2.5 Million - US$5 Million
Country / Region	Hongkong, China
Total Employees	100 - 200 People
Year Established	2018
Main Markets	North America South Asia Western Europe

sales@fpgamall.com +00852-56428680