https://www.fpgamall.com

THE DATASHEET OF FPGA

Artix-7 FPGAs Data Sheet: DC and AC Switching Characteristics

DS181 (v1.25) June 18, 2018 **Product Specification**

Introduction

Artix®-7 FPGAs are available in -3, -2, -1, -1LI, and -2L speed grades, with -3 having the highest performance. The Artix-7 FPGAs predominantly operate at a 1.0V core voltage. The -1LI and -2L devices are screened for lower maximum static power and can operate at lower core voltages for lower dynamic power than the -1 and -2 devices, respectively. The -1LI devices operate only at V_{CCINT} = V_{CCBRAM} = 0.95V and have the same speed specifications as the -1 speed grade. The -2L devices can operate at either of two V_{CCINT} voltages, 0.9V and 1.0V and are screened for lower maximum static power. When operated at V_{CCINT} = 1.0V, the speed specification of a -2L device is the same as the -2 speed grade. When operated at V_{CCINT} = 0.9V, the -2L static and dynamic power is reduced.

Artix-7 FPGA DC and AC characteristics are specified in commercial, extended, industrial, expanded (-1Q), and military (-1M) temperature ranges. Except the operating temperature range or unless otherwise noted, all the DC and AC electrical parameters are the same for a particular speed grade (that is, the timing characteristics of a -1M speed grade military device are the same as for a -1C speed grade commercial device). However, only selected speed grades and/or devices are available in each temperature range. For example, -1M is only available in the defense-grade Artix-7Q family and -1Q is only available in XA Artix-7 FPGAs.

All supply voltage and junction temperature specifications are representative of worst-case conditions. The parameters included are common to popular designs and typical applications.

Available device and package combinations can be found in:

- *7 Series FPGAs Overview* (DS180)
- *Defense-Grade 7 Series FPGAs Overview* (DS185)
- *XA Artix-7 FPGAs Overview* (DS197)

This Artix-7 FPGA data sheet, part of an overall set of documentation on the 7 series FPGAs, is available on the Xilinx website at www.xilinx.com/documentation.

DC Characteristics

Table 1: **Absolute Maximum Ratings(1)**

Symbol	Description	Min	Max	Units
FPGA Logic				
V_{CCINT}	Internal supply voltage	–0.5	1.1	V
V_{CCAUX}	Auxiliary supply voltage	–0.5	2.0	V
V_{CCBRAM}	Supply voltage for the block RAM memories	–0.5	1.1	V
V_{CCO}	Output drivers supply voltage for HR I/O banks	–0.5	3.6	V
V_{REF}	Input reference voltage	–0.5	2.0	V
V_{IN}(2)(3)(4)	I/O input voltage	–0.4	V_{CCO} + 0.55	V
	I/O input voltage (when V_{CCO} = 3.3V) for V_{REF} and differential I/O standards except TMDS_33(5)	–0.4	2.625	V
V_{CCBATT}	Key memory battery backup supply	–0.5	2.0	V
GTP Transceiver				
$V_{MGTAVCC}$	Analog supply voltage for the GTP transmitter and receiver circuits	–0.5	1.1	V
$V_{MGTAVTT}$	Analog supply voltage for the GTP transmitter and receiver termination circuits	–0.5	1.32	V
$V_{MGTREFCLK}$	Reference clock absolute input voltage	–0.5	1.32	V
V_{IN}	Receiver (RXP/RXN) and Transmitter (TXP/TXN) absolute input voltage	–0.5	1.26	V

© 2011– 2018 Xilinx, Inc. XILINX, the Xilinx logo, Artix, Virtex, Kintex, Zynq, Spartan, ISE, Vivado and other designated brands included herein are trademarks of Xilinx in the United States and other countries. All other trademarks are the property of their respective owners.

Table 1: **Absolute Maximum Ratings(1) *(Cont'd)***

Symbol	Description	Min	Max	Units
$I_{DCIN-FLOAT}$	DC input current for receiver input pins DC coupled RX termination = floating	–	14	mA
$I_{DCIN-MGTAVTT}$	DC input current for receiver input pins DC coupled RX termination = $V_{MGTAVTT}$	–	12	mA
$I_{DCIN-GND}$	DC input current for receiver input pins DC coupled RX termination = GND	–	6.5	mA
$I_{DCOUT-FLOAT}$	DC output current for transmitter pins DC coupled RX termination = floating	–	14	mA
$I_{DCOUT-MGTAVTT}$	DC output current for transmitter pins DC coupled RX termination = $V_{MGTAVTT}$	–	12	mA
XADC				
V_{CCADC}	XADC supply relative to GNDADC	–0.5	2.0	V
V_{REFP}	XADC reference input relative to GNDADC	–0.5	2.0	V
Temperature				
T_{STG}	Storage temperature (ambient)	–65	150	°C
T_{SOL}	Maximum soldering temperature for Pb/Sn component bodies(6)	–	+220	°C
	Maximum soldering temperature for Pb-free component bodies(6)	–	+260	°C
T_j	Maximum junction temperature(6)	–	+125	°C

Notes:

1. Stresses beyond those listed under Absolute Maximum Ratings might cause permanent damage to the device. These are stress ratings only, and functional operation of the device at these or any other conditions beyond those listed under Operating Conditions is not implied. Exposure to Absolute Maximum Ratings conditions for extended periods of time might affect device reliability.
2. The lower absolute voltage specification always applies.
3. For I/O operation, refer to *7 Series FPGAs SelectIO Resources User Guide* (UG471).
4. The maximum limit applies to DC signals. For maximum undershoot and overshoot AC specifications, see Table 4.
5. See Table 9 for TMDS_33 specifications.
6. For soldering guidelines and thermal considerations, see *7 Series FPGA Packaging and Pinout Specification* (UG475).

Table 2: **Recommended Operating Conditions(1)(2)**

Symbol	Description	Min	Typ	Max	Units
FPGA Logic					
V_{CCINT}(3)	For -3, -2, -2LE (1.0V), -1, -1Q, -1M devices: internal supply voltage	0.95	1.00	1.05	V
	For -1LI (0.95V) devices: internal supply voltage	0.92	0.95	0.98	V
	For -2LE (0.9V) devices: internal supply voltage	0.87	0.90	0.93	V
V_{CCAUX}	Auxiliary supply voltage	1.71	1.80	1.89	V
V_{CCBRAM}(3)	For -3, -2, -2LE (1.0V), -2LE (0.9V), -1, -1Q, -1M devices: block RAM supply voltage	0.95	1.00	1.05	V
	For -1LI (0.95V) devices: block RAM supply voltage	0.92	0.95	0.98	V
V_{CCO}(4)(5)	Supply voltage for HR I/O banks	1.14	–	3.465	V
V_{IN}(6)	I/O input voltage	–0.20	–	V_{CCO} + 0.20	V
	I/O input voltage (when V_{CCO} = 3.3V) for V_{REF} and differential I/O standards except TMDS_33(7)	–0.20	–	2.625	V
I_{IN}(8)	Maximum current through any pin in a powered or unpowered bank when forward biasing the clamp diode.	–	–	10	mA
V_{CCBATT}(9)	Battery voltage	1.0	–	1.89	V
GTP Transceiver					
$V_{MGTAVCC}$(10)	Analog supply voltage for the GTP transmitter and receiver circuits	0.97	1.0	1.03	V
$V_{MGTAVTT}$(10)	Analog supply voltage for the GTP transmitter and receiver termination circuits	1.17	1.2	1.23	V
XADC					
V_{CCADC}	XADC supply relative to GNDADC	1.71	1.80	1.89	V

Table 2: **Recommended Operating Conditions(1)(2) *(Cont'd)***

Symbol	Description	Min	Typ	Max	Units
V_{REFP}	Externally supplied reference voltage	1.20	1.25	1.30	V
Temperature					
T_j	Junction temperature operating range for commercial (C) temperature devices	0	–	85	°C
	Junction temperature operating range for extended (E) temperature devices	0	–	100	°C
	Junction temperature operating range for industrial (I) temperature devices	–40	–	100	°C
	Junction temperature operating range for expanded (Q) temperature devices	–40	–	125	°C
	Junction temperature operating range for military (M) temperature devices	–55	–	125	°C

Notes:

1. All voltages are relative to ground.
2. For the design of the power distribution system consult *7 Series FPGAs PCB Design and Pin Planning Guide* (UG483).
3. If V_{CCINT} and V_{CCBRAM} are operating at the same voltage, V_{CCINT} and V_{CCBRAM} should be connected to the same supply.
4. Configuration data is retained even if V_{CCO} drops to 0V.
5. Includes V_{CCO} of 1.2V, 1.35V, 1.5V, 1.8V, 2.5V, and 3.3V at ±5%.
6. The lower absolute voltage specification always applies.
7. See Table 9 for TMDS_33 specifications.
8. A total of 200 mA per bank should not be exceeded.
9. V_{CCBATT} is required only when using bitstream encryption. If battery is not used, connect V_{CCBATT} to either ground or V_{CCAUX}.
10. Each voltage listed requires the filter circuit described in *7 Series FPGAs GTP Transceiver User Guide* (UG482).

Table 3: **DC Characteristics Over Recommended Operating Conditions**

Symbol	Description	Min	Typ(1)	Max	Units
V_{DRINT}	Data retention V_{CCINT} voltage (below which configuration data might be lost)	0.75	–	–	V
V_{DRI}	Data retention V_{CCAUX} voltage (below which configuration data might be lost)	1.5	–	–	V
I_{REF}	V_{REF} leakage current per pin	–	–	15	µA
I_L	Input or output leakage current per pin (sample-tested)	–	–	15	µA
C_{IN}(2)	Die input capacitance at the pad	–	–	8	pF
I_{RPU}	Pad pull-up (when selected) @ V_{IN} = 0V, V_{CCO} = 3.3V	90	–	330	µA
	Pad pull-up (when selected) @ V_{IN} = 0V, V_{CCO} = 2.5V	68	–	250	µA
	Pad pull-up (when selected) @ V_{IN} = 0V, V_{CCO} = 1.8V	34	–	220	µA
	Pad pull-up (when selected) @ V_{IN} = 0V, V_{CCO} = 1.5V	23	–	150	µA
	Pad pull-up (when selected) @ V_{IN} = 0V, V_{CCO} = 1.2V	12	–	120	µA
I_{RPD}	Pad pull-down (when selected) @ V_{IN} = 3.3V	68	–	330	µA
I_{CCADC}	Analog supply current, analog circuits in powered up state	–	–	25	mA
I_{BATT}(3)	Battery supply current	–	–	150	nA
R_{IN_TERM}(4)	Thevenin equivalent resistance of programmable input termination to V_{CCO}/2 (UNTUNED_SPLIT_40)	28	40	55	Ω
	Thevenin equivalent resistance of programmable input termination to V_{CCO}/2 (UNTUNED_SPLIT_50)	35	50	65	Ω
	Thevenin equivalent resistance of programmable input termination to V_{CCO}/2 (UNTUNED_SPLIT_60)	44	60	83	Ω

Table 3: **DC Characteristics Over Recommended Operating Conditions *(Cont'd)***

Symbol	Description	Min	Typ[1]	Max	Units
n	Temperature diode ideality factor	–	1.010	–	–
r	Temperature diode series resistance	–	2	–	Ω

Notes:

1. Typical values are specified at nominal voltage, 25°C.
2. This measurement represents the die capacitance at the pad, not including the package.
3. Maximum value specified for worst case process at 25°C.
4. Termination resistance to a $V_{CCO}/2$ level.

Table 4: **V_{IN} Maximum Allowed AC Voltage Overshoot and Undershoot for HR I/O Banks[1][2]**

AC Voltage Overshoot	% of UI @–55°C to 125°C	AC Voltage Undershoot	% of UI @–55°C to 125°C
V_{CCO} + 0.55	100	–0.40	100
		–0.45	61.7
		–0.50	25.8
		–0.55	11.0
V_{CCO} + 0.60	46.6	–0.60	4.77
V_{CCO} + 0.65	21.2	–0.65	2.10
V_{CCO} + 0.70	9.75	–0.70	0.94
V_{CCO} + 0.75	4.55	–0.75	0.43
V_{CCO} + 0.80	2.15	–0.80	0.20
V_{CCO} + 0.85	1.02	–0.85	0.09
V_{CCO} + 0.90	0.49	–0.90	0.04
V_{CCO} + 0.95	0.24	–0.95	0.02

Notes:

1. A total of 200 mA per bank should not be exceeded.
2. The peak voltage of the overshoot or undershoot, and the duration above V_{CCO} + 0.20V or below GND – 0.20V, must not exceed the values in this table.

Table 5: **Typical Quiescent Supply Current**

Symbol	Description	Device	Speed Grade						Units
			1.0V				0.95V	0.9V	
			-3	-2	-2LE	-1	-1LI	-2LE	
I_{CCINTQ}	Quiescent V_{CCINT} supply current	XC7A12T	48	48	48	48	43	38	mA
		XC7A15T	95	95	95	95	58	66	mA
		XC7A25T	48	48	48	48	43	38	mA
		XC7A35T	95	95	95	95	58	66	mA
		XC7A50T	95	95	95	95	58	66	mA
		XC7A75T	155	155	155	155	96	108	mA
		XC7A100T	155	155	155	155	96	108	mA
		XC7A200T	328	328	328	328	203	232	mA
		XA7A12T	N/A	48	N/A	48	N/A	N/A	mA
		XA7A15T	N/A	95	N/A	95	N/A	N/A	mA
		XA7A25T	N/A	48	N/A	48	N/A	N/A	mA
		XA7A35T	N/A	95	N/A	95	N/A	N/A	mA
		XA7A50T	N/A	95	N/A	95	N/A	N/A	mA
		XA7A75T	N/A	155	N/A	155	N/A	N/A	mA
		XA7A100T	N/A	155	N/A	155	N/A	N/A	mA
		XQ7A50T	N/A	95	N/A	95	58	N/A	mA
		XQ7A100T	N/A	155	N/A	155	96	N/A	mA
		XQ7A200T	N/A	328	N/A	328	203	N/A	mA
I_{CCOQ}	Quiescent V_{CCO} supply current	XC7A12T	1	1	1	1	1	1	mA
		XC7A15T	1	1	1	1	1	1	mA
		XC7A25T	1	1	1	1	1	1	mA
		XC7A35T	1	1	1	1	1	1	mA
		XC7A50T	1	1	1	1	1	1	mA
		XC7A75T	4	4	4	4	4	4	mA
		XC7A100T	4	4	4	4	4	4	mA
		XC7A200T	5	5	5	5	5	5	mA
		XA7A12T	N/A	1	N/A	1	N/A	N/A	mA
		XA7A15T	N/A	1	N/A	1	N/A	N/A	mA
		XA7A25T	N/A	1	N/A	1	N/A	N/A	mA
		XA7A35T	N/A	1	N/A	1	N/A	N/A	mA
		XA7A50T	N/A	1	N/A	1	N/A	N/A	mA
		XA7A75T	N/A	4	N/A	4	N/A	N/A	mA
		XA7A100T	N/A	4	N/A	4	N/A	N/A	mA
		XQ7A50T	N/A	1	N/A	1	1	N/A	mA
		XQ7A100T	N/A	4	N/A	4	4	N/A	mA
		XQ7A200T	N/A	5	N/A	5	5	N/A	mA

Table 5: **Typical Quiescent Supply Current *(Cont'd)***

Symbol	Description	Device	Speed Grade						Units
			1.0V				0.95V	0.9V	
			-3	-2	-2LE	-1	-1LI	-2LE	
I_{CCAUXQ}	Quiescent V_{CCAUX} supply current	XC7A12T	13	13	13	13	13	13	mA
		XC7A15T	22	22	22	22	19	22	mA
		XC7A25T	13	13	13	13	13	13	mA
		XC7A35T	22	22	22	22	19	22	mA
		XC7A50T	22	22	22	22	19	22	mA
		XC7A75T	36	36	36	36	32	36	mA
		XC7A100T	36	36	36	36	32	36	mA
		XC7A200T	73	73	73	73	65	73	mA
		XA7A12T	N/A	13	N/A	13	N/A	N/A	mA
		XA7A15T	N/A	22	N/A	22	N/A	N/A	mA
		XA7A25T	N/A	13	N/A	13	N/A	N/A	mA
		XA7A35T	N/A	22	N/A	22	N/A	N/A	mA
		XA7A50T	N/A	22	N/A	22	N/A	N/A	mA
		XA7A75T	N/A	36	N/A	36	N/A	N/A	mA
		XA7A100T	N/A	36	N/A	36	N/A	N/A	mA
		XQ7A50T	N/A	22	N/A	22	19	N/A	mA
		XQ7A100T	N/A	36	N/A	36	32	N/A	mA
		XQ7A200T	N/A	73	N/A	73	65	N/A	mA

Table 5: **Typical Quiescent Supply Current *(Cont'd)***

Symbol	Description	Device	Speed Grade						Units
			1.0V				0.95V	0.9V	
			-3	-2	-2LE	-1	-1LI	-2LE	
$I_{CCBRAMQ}$	Quiescent V_{CCBRAM} supply current	XC7A12T	1	1	1	1	1	1	mA
		XC7A15T	2	2	2	2	1	2	mA
		XC7A25T	1	1	1	1	1	1	mA
		XC7A35T	2	2	2	2	1	2	mA
		XC7A50T	2	2	2	2	1	2	mA
		XC7A75T	4	4	4	4	2	4	mA
		XC7A100T	4	4	4	4	2	4	mA
		XC7A200T	11	11	11	11	6	11	mA
		XA7A12T	N/A	1	N/A	1	N/A	N/A	mA
		XA7A15T	N/A	2	N/A	2	N/A	N/A	mA
		XA7A25T	N/A	1	N/A	1	N/A	N/A	mA
		XA7A35T	N/A	2	N/A	2	N/A	N/A	mA
		XA7A50T	N/A	2	N/A	2	N/A	N/A	mA
		XA7A75T	N/A	4	N/A	4	N/A	N/A	mA
		XA7A100T	N/A	4	N/A	4	N/A	N/A	mA
		XQ7A50T	N/A	2	N/A	2	1	N/A	mA
		XQ7A100T	N/A	4	N/A	4	2	N/A	mA
		XQ7A200T	N/A	11	N/A	11	6	N/A	mA

Notes:

1. Typical values are specified at nominal voltage, 85°C junction temperature (T_j) with single-ended SelectIO resources.
2. Typical values are for blank configured devices with no output current loads, no active input pull-up resistors, all I/O pins are 3-state and floating.
3. Use the Xilinx Power Estimator (XPE) spreadsheet tool (download at http://www.xilinx.com/power) to estimate static power consumption for conditions other than those specified.

Power-On/Off Power Supply Sequencing

The recommended power-on sequence is V_{CCINT}, V_{CCBRAM}, V_{CCAUX}, and V_{CCO} to achieve minimum current draw and ensure that the I/Os are 3-stated at power-on. The recommended power-off sequence is the reverse of the power-on sequence. If V_{CCINT} and V_{CCBRAM} have the same recommended voltage levels then both can be powered by the same supply and ramped simultaneously. If V_{CCAUX} and V_{CCO} have the same recommended voltage levels then both can be powered by the same supply and ramped simultaneously.

For V_{CCO} voltages of 3.3V in HR I/O banks and configuration bank 0:

- The voltage difference between V_{CCO} and V_{CCAUX} must not exceed 2.625V for longer than $T_{VCCO2VCCAUX}$ for each power-on/off cycle to maintain device reliability levels.
- The $T_{VCCO2VCCAUX}$ time can be allocated in any percentage between the power-on and power-off ramps.

The recommended power-on sequence to achieve minimum current draw for the GTP transceivers is V_{CCINT}, $V_{MGTAVCC}$, $V_{MGTAVTT}$ OR $V_{MGTAVCC}$, V_{CCINT}, $V_{MGTAVTT}$. Both $V_{MGTAVCC}$ and V_{CCINT} can be ramped simultaneously. The recommended power-off sequence is the reverse of the power-on sequence to achieve minimum current draw.

If these recommended sequences are not met, current drawn from $V_{MGTAVTT}$ can be higher than specifications during power-up and power-down.

- When $V_{MGTAVTT}$ is powered before $V_{MGTAVCC}$ and $V_{MGTAVTT} - V_{MGTAVCC} > 150$ mV and $V_{MGTAVCC} < 0.7$V, the $V_{MGTAVTT}$ current draw can increase by 460 mA per transceiver during $V_{MGTAVCC}$ ramp up. The duration of the current draw can be up to 0.3 x $T_{MGTAVCC}$ (ramp time from GND to 90% of $V_{MGTAVCC}$). The reverse is true for power-down.
- When $V_{MGTAVTT}$ is powered before V_{CCINT} and $V_{MGTAVTT} - V_{CCINT} > 150$ mV and $V_{CCINT} < 0.7$V, the $V_{MGTAVTT}$ current draw can increase by 50 mA per transceiver during V_{CCINT} ramp up. The duration of the current draw can be up to 0.3 x T_{VCCINT} (ramp time from GND to 90% of V_{CCINT}). The reverse is true for power-down.

There is no recommended sequence for supplies not shown.

Table 6 shows the minimum current, in addition to I_{CCQ}, that is required by Artix-7 devices for proper power-on and configuration. If the current minimums shown in Table 5 and Table 6 are met, the device powers on after all four supplies have passed through their power-on reset threshold voltages. The FPGA must not be configured until after V_{CCINT} is applied.

Once initialized and configured, use the Xilinx Power Estimator (XPE) tools to estimate current drain on these supplies.

Table 6: **Power-On Current for Artix-7 Devices**

Device	$I_{CCINTMIN}$	$I_{CCAUXMIN}$	I_{CCOMIN}	$I_{CCBRAMMIN}$	Units
XC7A12T	I_{CCINTQ} + 120	I_{CCAUXQ} + 40	I_{CCOQ} + 40 mA per bank	$I_{CCBRAMQ}$ + 60	mA
XC7A15T	I_{CCINTQ} + 120	I_{CCAUXQ} + 40	I_{CCOQ} + 40 mA per bank	$I_{CCBRAMQ}$ + 60	mA
XC7A25T	I_{CCINTQ} + 120	I_{CCAUXQ} + 40	I_{CCOQ} + 40 mA per bank	$I_{CCBRAMQ}$ + 60	mA
XC7A35T	I_{CCINTQ} + 120	I_{CCAUXQ} + 40	I_{CCOQ} + 40 mA per bank	$I_{CCBRAMQ}$ + 60	mA
XC7A50T	I_{CCINTQ} + 120	I_{CCAUXQ} + 40	I_{CCOQ} + 40 mA per bank	$I_{CCBRAMQ}$ + 60	mA
XC7A75T	I_{CCINTQ} + 170	I_{CCAUXQ} + 40	I_{CCOQ} + 40 mA per bank	$I_{CCBRAMQ}$ + 60	mA
XC7A100T	I_{CCINTQ} + 170	I_{CCAUXQ} + 40	I_{CCOQ} + 40 mA per bank	$I_{CCBRAMQ}$ + 60	mA
XC7A200T	I_{CCINTQ} + 340	I_{CCAUXQ} + 50	I_{CCOQ} + 40 mA per bank	$I_{CCBRAMQ}$ + 80	mA
XA7A12T	I_{CCINTQ} + 120	I_{CCAUXQ} + 40	I_{CCOQ} + 40 mA per bank	$I_{CCBRAMQ}$ + 60	mA
XA7A15T	I_{CCINTQ} + 120	I_{CCAUXQ} + 40	I_{CCOQ} + 40 mA per bank	$I_{CCBRAMQ}$ + 60	mA
XA7A25T	I_{CCINTQ} + 120	I_{CCAUXQ} + 40	I_{CCOQ} + 40 mA per bank	$I_{CCBRAMQ}$ + 60	mA
XA7A35T	I_{CCINTQ} + 120	I_{CCAUXQ} + 40	I_{CCOQ} + 40 mA per bank	$I_{CCBRAMQ}$ + 60	mA
XA7A50T	I_{CCINTQ} + 120	I_{CCAUXQ} + 40	I_{CCOQ} + 40 mA per bank	$I_{CCBRAMQ}$ + 60	mA
XA7A75T	I_{CCINTQ} + 170	I_{CCAUXQ} + 40	I_{CCOQ} + 40 mA per bank	$I_{CCBRAMQ}$ + 60	mA
XA7A100T	I_{CCINTQ} + 170	I_{CCAUXQ} + 40	I_{CCOQ} + 40 mA per bank	$I_{CCBRAMQ}$ + 60	mA
XQ7A50T	I_{CCINTQ} + 120	I_{CCAUXQ} + 40	I_{CCOQ} + 40 mA per bank	$I_{CCBRAMQ}$ + 60	mA

Table 6: **Power-On Current for Artix-7 Devices *(Cont'd)***

Device	$I_{CCINTMIN}$	$I_{CCAUXMIN}$	I_{CCOMIN}	$I_{CCBRAMMIN}$	Units
XQ7A100T	I_{CCINTQ} + 170	I_{CCAUXQ} + 40	I_{CCOQ} + 40 mA per bank	$I_{CCBRAMQ}$ + 60	mA
XQ7A200T	I_{CCINTQ} + 340	I_{CCAUXQ} + 50	I_{CCOQ} + 40 mA per bank	$I_{CCBRAMQ}$ + 80	mA

Table 7: **Power Supply Ramp Time**

Symbol	Description	Conditions	Min	Max	Units
T_{VCCINT}	Ramp time from GND to 90% of V_{CCINT}		0.2	50	ms
T_{VCCO}	Ramp time from GND to 90% of V_{CCO}		0.2	50	ms
T_{VCCAUX}	Ramp time from GND to 90% of V_{CCAUX}		0.2	50	ms
$T_{VCCBRAM}$	Ramp time from GND to 90% of V_{CCBRAM}		0.2	50	ms
$T_{VCCO2VCCAUX}$	Allowed time per power cycle for $V_{CCO} - V_{CCAUX} > 2.625V$	T_J = 125°C(1)	–	300	ms
		T_J = 100°C(1)	–	500	
		T_J = 85°C(1)	–	800	
$T_{MGTAVCC}$	Ramp time from GND to 90% of $V_{MGTAVCC}$		0.2	50	ms
$T_{MGTAVTT}$	Ramp time from GND to 90% of $V_{MGTAVTT}$		0.2	50	ms

Notes:

1. Based on 240,000 power cycles with nominal V_{CCO} of 3.3V or 36,500 power cycles with worst case V_{CCO} of 3.465V.

DC Input and Output Levels

Values for V_{IL} and V_{IH} are recommended input voltages. Values for I_{OL} and I_{OH} are guaranteed over the recommended operating conditions at the V_{OL} and V_{OH} test points. Only selected standards are tested. These are chosen to ensure that all standards meet their specifications. The selected standards are tested at a minimum V_{CCO} with the respective V_{OL} and V_{OH} voltage levels shown. Other standards are sample tested.

Table 8: **SelectIO DC Input and Output Levels(1)(2)**

I/O Standard	V_{IL}		V_{IH}		V_{OL}	V_{OH}	I_{OL}	I_{OH}
	V, Min	V, Max	V, Min	V, Max	V, Max	V, Min	mA, Max	mA, Min
HSTL_I	–0.300	V_{REF} – 0.100	V_{REF} + 0.100	V_{CCO} + 0.300	0.400	V_{CCO} – 0.400	8.00	–8.00
HSTL_I_18	–0.300	V_{REF} – 0.100	V_{REF} + 0.100	V_{CCO} + 0.300	0.400	V_{CCO} – 0.400	8.00	–8.00
HSTL_II	–0.300	V_{REF} – 0.100	V_{REF} + 0.100	V_{CCO} + 0.300	0.400	V_{CCO} – 0.400	16.00	–16.00
HSTL_II_18	–0.300	V_{REF} – 0.100	V_{REF} + 0.100	V_{CCO} + 0.300	0.400	V_{CCO} – 0.400	16.00	–16.00
HSUL_12	–0.300	V_{REF} – 0.130	V_{REF} + 0.130	V_{CCO} + 0.300	20% V_{CCO}	80% V_{CCO}	0.10	–0.10
LVCMOS12	–0.300	35% V_{CCO}	65% V_{CCO}	V_{CCO} + 0.300	0.400	V_{CCO} – 0.400	Note 3	Note 3
LVCMOS15	–0.300	35% V_{CCO}	65% V_{CCO}	V_{CCO} + 0.300	25% V_{CCO}	75% V_{CCO}	Note 4	Note 4
LVCMOS18	–0.300	35% V_{CCO}	65% V_{CCO}	V_{CCO} + 0.300	0.450	V_{CCO} – 0.450	Note 5	Note 5
LVCMOS25	–0.300	0.7	1.700	V_{CCO} + 0.300	0.400	V_{CCO} – 0.400	Note 4	Note 4
LVCMOS33	–0.300	0.8	2.000	3.450	0.400	V_{CCO} – 0.400	Note 4	Note 4
LVTTL	–0.300	0.8	2.000	3.450	0.400	2.400	Note 5	Note 5
MOBILE_DDR	–0.300	20% V_{CCO}	80% V_{CCO}	V_{CCO} + 0.300	10% V_{CCO}	90% V_{CCO}	0.10	–0.10
PCI33_3	–0.400	30% V_{CCO}	50% V_{CCO}	V_{CCO} + 0.500	10% V_{CCO}	90% V_{CCO}	1.50	–0.50
SSTL135	–0.300	V_{REF} – 0.090	V_{REF} + 0.090	V_{CCO} + 0.300	V_{CCO}/2 – 0.150	V_{CCO}/2 + 0.150	13.00	–13.00
SSTL135_R	–0.300	V_{REF} – 0.090	V_{REF} + 0.090	V_{CCO} + 0.300	V_{CCO}/2 – 0.150	V_{CCO}/2 + 0.150	8.90	–8.90
SSTL15	–0.300	V_{REF} – 0.100	V_{REF} + 0.100	V_{CCO} + 0.300	V_{CCO}/2 – 0.175	V_{CCO}/2 + 0.175	13.00	–13.00

Table 8: **SelectIO DC Input and Output Levels[1][2] *(Cont'd)***

I/O Standard	V_{IL}		V_{IH}		V_{OL}	V_{OH}	I_{OL}	I_{OH}
	V, Min	V, Max	V, Min	V, Max	V, Max	V, Min	mA, Max	mA, Min
SSTL15_R	–0.300	V_{REF} – 0.100	V_{REF} + 0.100	V_{CCO} + 0.300	V_{CCO}/2 – 0.175	V_{CCO}/2 + 0.175	8.90	–8.90
SSTL18_I	–0.300	V_{REF} – 0.125	V_{REF} + 0.125	V_{CCO} + 0.300	V_{CCO}/2 – 0.470	V_{CCO}/2 + 0.470	8.00	–8.00
SSTL18_II	–0.300	V_{REF} – 0.125	V_{REF} + 0.125	V_{CCO} + 0.300	V_{CCO}/2 – 0.600	V_{CCO}/2 + 0.600	13.40	–13.40

Notes:

1. Tested according to relevant specifications.
2. 3.3V and 2.5V standards are only supported in HR I/O banks.
3. Supported drive strengths of 4, 8, or 12 mA in HR I/O banks.
4. Supported drive strengths of 4, 8, 12, or 16 mA in HR I/O banks.
5. Supported drive strengths of 4, 8, 12, 16, or 24 mA in HR I/O banks.
6. For detailed interface specific DC voltage levels, see *7 Series FPGAs SelectIO Resources User Guide* (UG471).

Table 9: **Differential SelectIO DC Input and Output Levels**

I/O Standard	V_{ICM}[1]			V_{ID}[2]			V_{OCM}[3]			V_{OD}[4]		
	V, Min	V, Typ	V, Max	V, Min	V, Typ	V, Max	V, Min	V, Typ	V, Max	V, Min	V, Typ	V, Max
BLVDS_25	0.300	1.200	1.425	0.100	–	–	–	1.250	–	Note 5		
MINI_LVDS_25	0.300	1.200	V_{CCAUX}	0.200	0.400	0.600	1.000	1.200	1.400	0.300	0.450	0.600
PPDS_25	0.200	0.900	V_{CCAUX}	0.100	0.250	0.400	0.500	0.950	1.400	0.100	0.250	0.400
RSDS_25	0.300	0.900	1.500	0.100	0.350	0.600	1.000	1.200	1.400	0.100	0.350	0.600
TMDS_33	2.700	2.965	3.230	0.150	0.675	1.200	V_{CCO}–0.405	V_{CCO}–0.300	V_{CCO}–0.190	0.400	0.600	0.800

Notes:

1. V_{ICM} is the input common mode voltage.
2. V_{ID} is the input differential voltage (Q – $\overline{Q}$).
3. V_{OCM} is the output common mode voltage.
4. V_{OD} is the output differential voltage (Q – $\overline{Q}$).
5. V_{OD} for BLVDS will vary significantly depending on topology and loading.

Table 10: **Complementary Differential SelectIO DC Input and Output Levels**

I/O Standard	V_{ICM}[1]			V_{ID}[2]		V_{OL}[3]	V_{OH}[4]	I_{OL}	I_{OH}
	V, Min	V,Typ	V, Max	V,Min	V, Max	V, Max	V, Min	mA, Max	mA, Min
DIFF_HSTL_I	0.300	0.750	1.125	0.100	–	0.400	V_{CCO}–0.400	8.00	–8.00
DIFF_HSTL_I_18	0.300	0.900	1.425	0.100	–	0.400	V_{CCO}–0.400	8.00	–8.00
DIFF_HSTL_II	0.300	0.750	1.125	0.100	–	0.400	V_{CCO}–0.400	16.00	–16.00
DIFF_HSTL_II_18	0.300	0.900	1.425	0.100	–	0.400	V_{CCO}–0.400	16.00	–16.00
DIFF_HSUL_12	0.300	0.600	0.850	0.100	–	20% V_{CCO}	80% V_{CCO}	0.100	–0.100
DIFF_MOBILE_DDR	0.300	0.900	1.425	0.100	–	10% V_{CCO}	90% V_{CCO}	0.100	–0.100
DIFF_SSTL135	0.300	0.675	1.000	0.100	–	(V_{CCO}/2) – 0.150	(V_{CCO}/2) + 0.150	13.0	–13.0
DIFF_SSTL135_R	0.300	0.675	1.000	0.100	–	(V_{CCO}/2) – 0.150	(V_{CCO}/2) + 0.150	8.9	–8.9
DIFF_SSTL15	0.300	0.750	1.125	0.100	–	(V_{CCO}/2) – 0.175	(V_{CCO}/2) + 0.175	13.0	–13.0
DIFF_SSTL15_R	0.300	0.750	1.125	0.100	–	(V_{CCO}/2) – 0.175	(V_{CCO}/2) + 0.175	8.9	–8.9
DIFF_SSTL18_I	0.300	0.900	1.425	0.100	–	(V_{CCO}/2) – 0.470	(V_{CCO}/2) + 0.470	8.00	–8.00

Table 10: **Complementary Differential SelectIO DC Input and Output Levels *(Cont'd)***

I/O Standard	V_{ICM}[1]			V_{ID}[2]		V_{OL}[3]	V_{OH}[4]	I_{OL}	I_{OH}
	V, Min	V,Typ	V, Max	V,Min	V, Max	V, Max	V, Min	mA, Max	mA, Min
DIFF_SSTL18_II	0.300	0.900	1.425	0.100	–	(V_{CCO}/2) – 0.600	(V_{CCO}/2) + 0.600	13.4	–13.4

Notes:

1. V_{ICM} is the input common mode voltage.
2. V_{ID} is the input differential voltage (Q – $\overline{Q}$).
3. V_{OL} is the single-ended low-output voltage.
4. V_{OH} is the single-ended high-output voltage.

LVDS DC Specifications (LVDS_25)

Table 11: **LVDS_25 DC Specifications[1]**

Symbol	DC Parameter	Conditions	Min	Typ	Max	Units
V_{CCO}	Supply Voltage		2.375	2.500	2.625	V
V_{OH}	Output High Voltage for Q and $\overline{Q}$	R_T = 100 Ω across Q and $\overline{Q}$ signals	–	–	1.675	V
V_{OL}	Output Low Voltage for Q and $\overline{Q}$	R_T = 100 Ω across Q and $\overline{Q}$ signals	0.700	–	–	V
V_{ODIFF}	Differential Output Voltage: (Q – $\overline{Q}$), Q = High ($\overline{Q}$ – Q), $\overline{Q}$ = High	R_T = 100 Ω across Q and $\overline{Q}$ signals	247	350	600	mV
V_{OCM}	Output Common-Mode Voltage	R_T = 100 Ω across Q and $\overline{Q}$ signals	1.000	1.250	1.425	V
V_{IDIFF}	Differential Input Voltage: (Q – $\overline{Q}$), Q = High ($\overline{Q}$ – Q), $\overline{Q}$ = High		100	350	600	mV
V_{ICM}	Input Common-Mode Voltage		0.300	1.200	1.500	V

Notes:

1. Differential inputs for LVDS_25 can be placed in banks with V_{CCO} levels that are different from the required level for outputs. Consult the *7 Series FPGAs SelectIO Resources User Guide* (UG471) for more information.

AC Switching Characteristics

All values represented in this data sheet are based on the speed specifications from the ISE® Design Suite and Vivado® Design Suite as outlined in Table 12.

Table 12: **Artix-7 FPGA Speed Specification Version By Device**

Version In:		Typical V_{CCINT}	Device
ISE 14.7	Vivado 2018.2	(Table 2)	
N/A	1.22	1.0V	XC7A12T, XC7A15T, XC7A25T, XC7A35T, XC7A50T, XC7A75T
N/A	1.22	0.95V	XC7A12T, XC7A15T, XC7A25T, XC7A35T, XC7A50T, XC7A75T, XC7A100T, XC7A200T
N/A	1.14	0.9V	XC7A12T, XC7A15T, XC7A25T, XC7A35T, XC7A50T, XC7A75T
1.10	1.22	1.0V	XC7A100T, XC7A200T
1.07	1.14	0.9V	XC7A100T, XC7A200T
N/A	1.15	1.0V	XA7A12T, XA7A15T, XA725T, XA7A35T, XA7A50T, XA7A75T
1.07	1.15	1.0V	XA7A100T
1.06	1.11	1.0V	XQ7A100T, XQ7A200T
N/A	1.11	1.0V	XQ7A50T

Switching characteristics are specified on a per-speed-grade basis and can be designated as Advance, Preliminary, or Production. Each designation is defined as follows:

Advance Product Specification

These specifications are based on simulations only and are typically available soon after device design specifications are frozen. Although speed grades with this designation are considered relatively stable and conservative, some under-reporting might still occur.

Preliminary Product Specification

These specifications are based on complete ES (engineering sample) silicon characterization. Devices and speed grades with this designation are intended to give a better indication of the expected performance of production silicon. The probability of under-reporting delays is greatly reduced as compared to Advance data.

Production Product Specification

These specifications are released once enough production silicon of a particular device family member has been characterized to provide full correlation between specifications and devices over numerous production lots. There is no under-reporting of delays, and customers receive formal notification of any subsequent changes. Typically, the slowest speed grades transition to Production before faster speed grades.

Testing of AC Switching Characteristics

Internal timing parameters are derived from measuring internal test patterns. All AC switching characteristics are representative of worst-case supply voltage and junction temperature conditions.

For more specific, more precise, and worst-case guaranteed data, use the values reported by the static timing analyzer and back-annotate to the simulation net list. Unless otherwise noted, values apply to all Artix-7 FPGAs.

Speed Grade Designations

Since individual family members are produced at different times, the migration from one category to another depends completely on the status of the fabrication process for each device. Table 13 correlates the current status of each Artix-7 device on a per speed grade basis.

Table 13: **Artix-7 Device Speed Grade Designations**

Device	Speed Grade Designations		
	Advance	Preliminary	Production
XC7A12T			-3, -2, -1, -1LI (0.95V), and -2LE (0.9V)
XC7A15T			-3, -2, -2LE (1.0V), -1, -1LI (0.95V), and -2LE (0.9V)
XC7A25T			-3, -2, -1, -1LI (0.95V), and -2LE (0.9V)
XC7A35T			-3, -2, -2LE (1.0V), -1, -1LI (0.95V), and -2LE (0.9V)
XC7A50T			-3, -2, -2LE (1.0V), -1, -1LI (0.95V), and -2LE (0.9V)
XC7A75T			-3, -2, -2LE (1.0V), -1, -1LI (0.95V), and -2LE (0.9V)
XC7A100T			-3, -2, -2LE (1.0V), -1, -1LI (0.95V), and -2LE (0.9V)
XC7A200T			-3, -2, -2LE (1.0V), -1, -1LI (0.95V), and -2LE (0.9V)
XA7A12T			-2I, -1I, and -1Q
XA7A15T			-2I, -1I, and -1Q
XA7A25T			-2I, -1I, and -1Q
XA7A35T			-2I, -1I, and -1Q
XA7A50T			-2I, -1I, and -1Q
XA7A75T			-2I, -1I, and -1Q
XA7A100T			-2I, -1I, and -1Q
XQ7A50T			-2I, -1I, -1LI (0.95V), and -1M
XQ7A100T			-2I, -1I, -1LI (0.95V), and -1M
XQ7A200T			-2I, -1I, -1LI (0.95V), and -1M

Production Silicon and Software Status

In some cases, a particular family member (and speed grade) is released to production before a speed specification is released with the correct label (Advance, Preliminary, Production). Any labeling discrepancies are corrected in subsequent speed specification releases.

Table 14 lists the production released Artix-7 device, speed grade, and the minimum corresponding supported speed specification version and software revisions. The software and speed specifications listed are the minimum releases required for production. All subsequent releases of software and speed specifications are valid.

Table 14: **Artix-7 Device Production Software and Speed Specification Release**

Device	Speed Grade							
	1.0V						0.95V	0.9V
	-3	-2	-2LE	-1	-1Q	-1M	-1LI	-2LE
XC7A12T	Vivado tools 2018.2 v1.22	Vivado tools 2017.4 v1.20			N/A	N/A	Vivado tools 2017.4 v1.20	Vivado tools 2018.1 v1.14
XC7A15T	Vivado tools 2014.4 v1.14				N/A	N/A	Vivado tools 2014.4 v1.14	Vivado tools 2014.4 v1.10
XC7A25T	Vivado tools 2018.2 v1.22	Vivado tools 2017.4 v1.20			N/A	N/A	Vivado tools 2017.4 v1.20	Vivado tools 2018.1 v1.14
XC7A35T	Vivado tools 2013.4 v1.11				N/A	N/A	Vivado tools 2014.4 v1.14	Vivado tools 2013.4 v1.08

Table 14: **Artix-7 Device Production Software and Speed Specification Release *(Cont'd)***

Device	Speed Grade							
	1.0V						0.95V	0.9V
	-3	-2	-2LE	-1	-1Q	-1M	-1LI	-2LE
XC7A50T	Vivado tools 2013.4 v1.11				N/A	N/A	Vivado tools 2014.4 v1.14	Vivado tools 2013.4 v1.08
XC7A75T	Vivado tools 2013.3 v1.10				N/A	N/A	Vivado tools 2014.4 v1.14	Vivado tools 2013.3 v1.07
XC7A100T	ISE tools 14.4 or Vivado tools 2012.4 with the 14.4/2012.4 device pack v1.07				N/A	N/A	Vivado tools 2014.4 v1.14	ISE tools 14.5 or Vivado tools 2013.1 v1.05
XC7A200T	ISE tools 14.4 or Vivado tools 2012.4 with the 14.4/2012.4 device pack v1.07				N/A	N/A	Vivado tools 2014.4 v1.14	
XA7A12T	N/A	Vivado tools 2018.1 v1.15	N/A	Vivado tools 2018.1 v1.15		N/A	N/A	N/A
XA7A15T	N/A	Vivado tools 2014.4 v1.14	N/A	Vivado tools 2014.4 v1.14		N/A	N/A	N/A
XA7A25T	N/A	Vivado tools 2018.1 v1.15	N/A	Vivado tools 2018.1 v1.15		N/A	N/A	N/A
XA7A35T	N/A	Vivado tools 2014.1 v1.09	N/A	Vivado tools 2014.1 v1.09		N/A	N/A	N/A
XA7A50T	N/A	Vivado tools 2014.1 v1.09	N/A	Vivado tools 2014.1 v1.09		N/A	N/A	N/A
XA7A75T	N/A	Vivado tools 2014.1 v1.09	N/A	Vivado tools 2014.1 v1.09		N/A	N/A	N/A
XA7A100T	N/A	ISE tools 14.5 or Vivado tools 2013.1 v1.05	N/A	ISE tools 14.5 or Vivado tools 2013.1 v1.05	ISE tools 14.6 or Vivado tools 2013.2 v1.06	N/A	N/A	N/A
XQ7A50T	N/A	Vivado tools 2014.2 v1.08	N/A	Vivado tools 2014.2 v1.08	N/A	Vivado tools 2014.2 v1.08	Vivado tools 2015.4 v1.11	N/A
XQ7A100T	N/A	ISE tools 14.5 or Vivado tools 2013.1 v1.04	N/A	ISE tools 14.5 or Vivado tools 2013.1 v1.04	N/A	ISE tools 14.6 or Vivado tools 2013.2 v1.05	Vivado tools 2015.4 v1.11	N/A
XQ7A200T	N/A	ISE tools 14.5 or Vivado tools 2013.1 v1.04	N/A	ISE tools 14.5 or Vivado tools 2013.1 v1.04	N/A	ISE tools 14.6 or Vivado tools 2013.2 v1.05	Vivado tools 2015.4 v1.11	N/A

Selecting the Correct Speed Grade and Voltage in the Vivado Tools

It is important to select the correct device speed grade and voltage in the Vivado tools for the device that you are selecting.

To select the 1.0V speed specifications in the Vivado tools, select the **Artix-7**, **XA Artix-7**, or **Defense Grade Artix-7Q** sub-family, and then select the part name that is the device name followed by the package name followed by the speed grade. For example, select the **xc7a100tfgg676-3** part name for the XC7A100T device in the FGG676 package and -3 (1.0V) speed grade or select the **xc7a100tfgg676-2L** part name for the XC7A100T device in the FGG676 package and -2LE (1.0V) speed grade.

To select the -1LI (0.95V) speed specifications in the Vivado tools, select the **Artix-7** sub-family and then select the part name that is the device name followed by an "i" followed by the package name followed by the speed grade. For example, select the **xc7a100tifgg676-1L** part name for the XC7A100T device in the FGG676 package and -1LI (0.95V) speed grade. The -1LI (0.95V) speed specifications are not supported in the ISE tools.

To select the -2LE (0.9V) speed specifications in the Vivado tools, select the **Artix-7 Low Voltage** sub-family and then select the part name that is the device name followed by an "l" followed by the package name followed by the speed grade. For example, select the **xc7a100tlfgg676-2L** part name for the XC7A100T device in the FGG676 package and -2LE (0.9V) speed grade.

A similar part naming convention applies to the speed specifications selection in the ISE tools for supported devices. See Table 14 for the subset of 7 series FPGAs supported in the ISE tools.

Performance Characteristics

This section provides the performance characteristics of some common functions and designs implemented in Artix-7 devices. The numbers reported here are worst-case values; they have all been fully characterized. These values are subject to the same guidelines as the AC Switching Characteristics, page 12.

Table 15: **Networking Applications Interface Performances**

Description	Speed Grade					Units
	1.0V			0.95V	0.9V	
	-3	-2/-2LE	-1	-1LI	-2LE	
SDR LVDS transmitter (using OSERDES; DATA_WIDTH = 4 to 8)	680	680	600	600	600	Mb/s
DDR LVDS transmitter (using OSERDES; DATA_WIDTH = 4 to 14)	1250	1250	950	950	950	Mb/s
SDR LVDS receiver (SFI-4.1)(1)	680	680	600	600	600	Mb/s
DDR LVDS receiver (SPI-4.2)(1)	1250	1250	950	950	950	Mb/s

Notes:

1. LVDS receivers are typically bounded with certain applications where specific dynamic phase-alignment (DPA) algorithms dominate deterministic performance.

Table 16: **Maximum Physical Interface (PHY) Rate for Memory Interfaces IP available with the Memory Interface Generator(1)(2)**

Memory Standard	Speed Grade						Units
	1.0V				0.95V	0.9V	
	-3	-2/-2LE	-1	-1Q/-1M	-1LI	-2LE	
4:1 Memory Controllers							
DDR3	1066(3)	800	800	667	800	800	Mb/s
DDR3L	800	800	667	N/A	667	667	Mb/s
DDR2	800	800	667	533	667	667	Mb/s
2:1 Memory Controllers							
DDR3	800	700	620	620	620	620	Mb/s
DDR3L	800	700	620	N/A	620	620	Mb/s
DDR2	800	700	620	533	620	620	Mb/s
LPDDR2	667	667	533	400	533	533	Mb/s

Notes:

1. V_{REF} tracking is required. For more information, see *7 Series FPGAs Memory Interface Solutions User Guide* (UG586).
2. When using the internal V_{REF}, the maximum data rate is 800 Mb/s (400 MHz).
3. The maximum PHY rate is 800 Mb/s in the CPG238 package.

IOB Pad Input/Output/3-State

Table 17 summarizes the values of standard-specific data input delay adjustments, output delays terminating at pads (based on standard) and 3-state delays.

- T_{IOPI} is described as the delay from IOB pad through the input buffer to the I-pin of an IOB pad. The delay varies depending on the capability of the SelectIO input buffer.
- T_{IOOP} is described as the delay from the O pin to the IOB pad through the output buffer of an IOB pad. The delay varies depending on the capability of the SelectIO output buffer.
- T_{IOTP} is described as the delay from the T pin to the IOB pad through the output buffer of an IOB pad, when 3-state is disabled. The delay varies depending on the SelectIO capability of the output buffer. In HR I/O banks, the IN_TERM termination turn-on time is always faster than T_{IOTP} when the INTERMDISABLE pin is used.

Table 17: **IOB High Range (HR) Switching Characteristics**

I/O Standard	T_{IOPI}						T_{IOOP}						T_{IOTP}						Units
	Speed Grade						Speed Grade						Speed Grade						
	1.0V				0.95V	0.9V	1.0V				0.95V	0.9V	1.0V				0.95V	0.9V	
	-3	-2/ -2LE	-1	-1Q/ -1M	-1LI	-2LE	-3	-2/ -2LE	-1	-1Q/ -1M	-1LI	-2LE	-3	-2/ -2LE	-1	-1Q/ -1M	-1LI	-2LE	
LVTTL_S4	1.26	1.34	1.41	1.53	1.41	1.58	3.80	3.93	4.18	4.18	4.18	4.41	3.82	3.96	4.20	4.20	4.20	4.05	ns
LVTTL_S8	1.26	1.34	1.41	1.53	1.41	1.58	3.54	3.66	3.92	3.92	3.92	4.15	3.56	3.69	3.93	3.93	3.93	3.78	ns
LVTTL_S12	1.26	1.34	1.41	1.53	1.41	1.58	3.52	3.65	3.90	3.90	3.90	4.13	3.54	3.68	3.91	3.91	3.91	3.77	ns
LVTTL_S16	1.26	1.34	1.41	1.53	1.41	1.58	3.07	3.19	3.45	3.45	3.45	3.68	3.09	3.22	3.46	3.46	3.46	3.31	ns
LVTTL_S24	1.26	1.34	1.41	1.53	1.41	1.58	3.29	3.41	3.67	3.67	3.67	3.90	3.31	3.44	3.68	3.68	3.68	3.53	ns
LVTTL_F4	1.26	1.34	1.41	1.53	1.41	1.58	3.26	3.38	3.64	3.64	3.64	3.86	3.28	3.41	3.65	3.65	3.65	3.50	ns
LVTTL_F8	1.26	1.34	1.41	1.53	1.41	1.58	2.74	2.87	3.12	3.12	3.12	3.35	2.76	2.90	3.13	3.13	3.13	2.99	ns
LVTTL_F12	1.26	1.34	1.41	1.53	1.41	1.58	2.73	2.85	3.10	3.10	3.10	3.33	2.74	2.88	3.12	3.12	3.12	2.97	ns
LVTTL_F16	1.26	1.34	1.41	1.53	1.41	1.58	2.56	2.68	2.93	2.93	2.93	3.16	2.57	2.71	2.95	2.95	2.95	2.80	ns
LVTTL_F24	1.26	1.34	1.41	1.53	1.41	1.58	2.52	2.65	2.90	3.23	2.90	3.22	2.54	2.68	2.91	3.24	2.91	2.86	ns
LVDS_25	0.73	0.81	0.88	0.89	0.88	0.90	1.29	1.41	1.67	1.67	1.67	1.86	1.31	1.44	1.68	1.68	1.68	1.50	ns
MINI_LVDS_25	0.73	0.81	0.88	0.89	0.88	0.90	1.27	1.40	1.65	1.65	1.65	1.88	1.29	1.43	1.66	1.66	1.66	1.52	ns
BLVDS_25	0.73	0.81	0.88	0.88	0.88	0.90	1.84	1.96	2.21	2.76	2.21	2.44	1.85	1.99	2.23	2.77	2.23	2.08	ns
RSDS_25 (point to point)	0.73	0.81	0.88	0.89	0.88	0.90	1.27	1.40	1.65	1.65	1.65	1.88	1.29	1.43	1.66	1.66	1.66	1.52	ns
PPDS_25	0.73	0.81	0.88	0.89	0.88	0.90	1.29	1.41	1.67	1.67	1.67	1.88	1.31	1.44	1.68	1.68	1.68	1.52	ns
TMDS_33	0.73	0.81	0.88	0.92	0.88	0.90	1.41	1.54	1.79	1.79	1.79	1.99	1.43	1.57	1.80	1.80	1.80	1.63	ns
PCI33_3	1.24	1.32	1.39	1.52	1.39	1.57	3.10	3.22	3.48	3.48	3.48	3.71	3.12	3.25	3.49	3.49	3.49	3.34	ns
HSUL_12_S	0.67	0.75	0.82	0.88	0.82	0.87	1.81	1.93	2.18	2.18	2.18	2.41	1.82	1.96	2.20	2.20	2.20	2.05	ns
HSUL_12_F	0.67	0.75	0.82	0.88	0.82	0.87	1.29	1.41	1.67	1.67	1.67	1.90	1.31	1.44	1.68	1.68	1.68	1.53	ns
DIFF_HSUL_ 12_S	0.68	0.76	0.83	0.86	0.83	0.88	1.81	1.93	2.18	2.18	2.18	2.21	1.82	1.96	2.20	2.20	2.20	1.84	ns
DIFF_HSUL_ 12_F	0.68	0.76	0.83	0.86	0.83	0.88	1.29	1.41	1.67	1.67	1.67	1.79	1.31	1.44	1.68	1.68	1.68	1.42	ns
MOBILE_ DDR_S	0.76	0.84	0.91	0.91	0.91	0.96	1.68	1.80	2.06	2.06	2.06	2.24	1.70	1.83	2.07	2.07	2.07	1.88	ns
MOBILE_ DDR_F	0.76	0.84	0.91	0.91	0.91	0.96	1.38	1.51	1.76	1.76	1.76	1.97	1.40	1.54	1.77	1.77	1.77	1.61	ns
DIFF_MOBILE_ DDR_S	0.70	0.78	0.85	0.85	0.85	0.87	1.70	1.82	2.07	2.07	2.07	2.24	1.71	1.85	2.09	2.09	2.09	1.88	ns
DIFF_MOBILE_ DDR_F	0.70	0.78	0.85	0.85	0.85	0.87	1.45	1.57	1.82	1.82	1.82	2.00	1.46	1.60	1.84	1.84	1.84	1.64	ns

Table 17: **IOB High Range (HR) Switching Characteristics *(Cont'd)***

I/O Standard	T_{IOPI}						T_{IOOP}						T_{IOTP}						Units
	Speed Grade						Speed Grade						Speed Grade						
	1.0V				0.95V	0.9V	1.0V				0.95V	0.9V	1.0V				0.95V	0.9V	
	-3	-2/ -2LE	-1	-1Q/ -1M	-1LI	-2LE	-3	-2/ -2LE	-1	-1Q/ -1M	-1LI	-2LE	-3	-2/ -2LE	-1	-1Q/ -1M	-1LI	-2LE	
HSTL_I_S	0.67	0.75	0.82	0.86	0.82	0.87	1.62	1.74	1.99	1.99	1.99	2.19	1.63	1.77	2.01	2.01	2.01	1.83	ns
HSTL_II_S	0.65	0.73	0.80	0.86	0.80	0.85	1.41	1.54	1.79	1.79	1.79	1.99	1.43	1.57	1.80	1.81	1.80	1.63	ns
HSTL_I_18_S	0.67	0.75	0.82	0.88	0.82	0.87	1.29	1.41	1.67	1.67	1.67	1.86	1.31	1.44	1.68	1.68	1.68	1.50	ns
HSTL_II_18_S	0.66	0.75	0.81	0.88	0.81	0.87	1.41	1.54	1.79	1.79	1.79	1.97	1.43	1.57	1.80	1.80	1.80	1.61	ns
DIFF_HSTL_I_S	0.68	0.76	0.83	0.86	0.83	0.85	1.59	1.71	1.96	1.96	1.96	2.13	1.60	1.74	1.98	1.98	1.98	1.77	ns
DIFF_HSTL_ II_S	0.68	0.76	0.83	0.86	0.83	0.85	1.51	1.63	1.88	1.88	1.88	2.07	1.52	1.66	1.90	1.90	1.90	1.70	ns
DIFF_HSTL_ I_18_S	0.71	0.79	0.86	0.86	0.86	0.87	1.38	1.51	1.76	1.76	1.76	1.96	1.40	1.54	1.77	1.77	1.77	1.59	ns
DIFF_HSTL_ II_18_S	0.70	0.78	0.85	0.88	0.85	0.87	1.46	1.58	1.84	1.84	1.84	2.00	1.48	1.61	1.85	1.85	1.85	1.64	ns
HSTL_I_F	0.67	0.75	0.82	0.86	0.82	0.87	1.10	1.22	1.48	1.49	1.48	1.69	1.12	1.25	1.49	1.51	1.49	1.33	ns
HSTL_II_F	0.65	0.73	0.80	0.86	0.80	0.85	1.12	1.24	1.49	1.49	1.49	1.71	1.13	1.27	1.51	1.51	1.51	1.34	ns
HSTL_I_18_F	0.67	0.75	0.82	0.88	0.82	0.87	1.13	1.26	1.51	1.54	1.51	1.72	1.15	1.29	1.52	1.56	1.52	1.36	ns
HSTL_II_18_F	0.66	0.75	0.81	0.88	0.81	0.87	1.12	1.24	1.49	1.51	1.49	1.71	1.13	1.27	1.51	1.52	1.51	1.34	ns
DIFF_HSTL_I_F	0.68	0.76	0.83	0.86	0.83	0.85	1.18	1.30	1.56	1.56	1.56	1.77	1.20	1.33	1.57	1.57	1.57	1.41	ns
DIFF_HSTL_ II_F	0.68	0.76	0.83	0.86	0.83	0.85	1.21	1.33	1.59	1.59	1.59	1.77	1.23	1.36	1.60	1.60	1.60	1.41	ns
DIFF_HSTL_ I_18_F	0.71	0.79	0.86	0.86	0.86	0.87	1.21	1.33	1.59	1.59	1.59	1.77	1.23	1.36	1.60	1.60	1.60	1.41	ns
DIFF_HSTL_ II_18_F	0.70	0.78	0.85	0.88	0.85	0.87	1.21	1.33	1.59	1.59	1.59	1.77	1.23	1.36	1.60	1.60	1.60	1.41	ns
LVCMOS33_S4	1.26	1.34	1.41	1.52	1.41	1.62	3.80	3.93	4.18	4.18	4.18	4.41	3.82	3.96	4.20	4.20	4.20	4.05	ns
LVCMOS33_S8	1.26	1.34	1.41	1.52	1.41	1.62	3.52	3.65	3.90	3.90	3.90	4.13	3.54	3.68	3.91	3.91	3.91	3.77	ns
LVCMOS33_S12	1.26	1.34	1.41	1.52	1.41	1.62	3.09	3.21	3.46	3.46	3.46	3.69	3.10	3.24	3.48	3.48	3.48	3.33	ns
LVCMOS33_S16	1.26	1.34	1.41	1.52	1.41	1.62	3.40	3.52	3.77	3.78	3.77	4.00	3.42	3.55	3.79	3.79	3.79	3.64	ns
LVCMOS33_F4	1.26	1.34	1.41	1.52	1.41	1.62	3.26	3.38	3.64	3.64	3.64	3.86	3.28	3.41	3.65	3.65	3.65	3.50	ns
LVCMOS33_F8	1.26	1.34	1.41	1.52	1.41	1.62	2.74	2.87	3.12	3.12	3.12	3.35	2.76	2.90	3.13	3.13	3.13	2.99	ns
LVCMOS33_F12	1.26	1.34	1.41	1.52	1.41	1.62	2.56	2.68	2.93	2.93	2.93	3.16	2.57	2.71	2.95	2.95	2.95	2.80	ns
LVCMOS33_F16	1.26	1.34	1.41	1.52	1.41	1.62	2.56	2.68	2.93	3.06	2.93	3.16	2.57	2.71	2.95	3.07	2.95	2.80	ns
LVCMOS25_S4	1.12	1.20	1.27	1.38	1.27	1.43	3.13	3.26	3.51	3.51	3.51	3.72	3.15	3.29	3.52	3.52	3.52	3.36	ns
LVCMOS25_S8	1.12	1.20	1.27	1.38	1.27	1.43	2.88	3.01	3.26	3.26	3.26	3.49	2.90	3.04	3.27	3.27	3.27	3.13	ns
LVCMOS25_S12	1.12	1.20	1.27	1.38	1.27	1.43	2.48	2.60	2.85	2.85	2.85	3.08	2.49	2.63	2.87	2.87	2.87	2.72	ns
LVCMOS25_S16	1.12	1.20	1.27	1.38	1.27	1.43	2.82	2.94	3.20	3.20	3.20	3.43	2.84	2.97	3.21	3.21	3.21	3.06	ns
LVCMOS25_F4	1.12	1.20	1.27	1.38	1.27	1.43	2.74	2.87	3.12	3.12	3.12	3.35	2.76	2.90	3.13	3.13	3.13	2.99	ns
LVCMOS25_F8	1.12	1.20	1.27	1.38	1.27	1.43	2.18	2.30	2.56	2.56	2.56	2.79	2.20	2.33	2.57	2.57	2.57	2.42	ns
LVCMOS25_F12	1.12	1.20	1.27	1.38	1.27	1.43	2.16	2.29	2.54	2.54	2.54	2.77	2.18	2.32	2.55	2.56	2.55	2.41	ns
LVCMOS25_F16	1.12	1.20	1.27	1.38	1.27	1.43	2.01	2.13	2.39	2.63	2.39	2.61	2.03	2.16	2.40	2.65	2.40	2.25	ns
LVCMOS18_S4	0.74	0.83	0.89	0.97	0.89	0.94	1.62	1.74	1.99	1.99	1.99	2.19	1.63	1.77	2.01	2.01	2.01	1.83	ns
LVCMOS18_S8	0.74	0.83	0.89	0.97	0.89	0.94	2.18	2.30	2.56	2.56	2.56	2.79	2.20	2.33	2.57	2.57	2.57	2.42	ns
LVCMOS18_S12	0.74	0.83	0.89	0.97	0.89	0.94	2.18	2.30	2.56	2.56	2.56	2.79	2.20	2.33	2.57	2.57	2.57	2.42	ns

Table 17: **IOB High Range (HR) Switching Characteristics *(Cont'd)***

I/O Standard	T_{IOPI}						T_{IOOP}						T_{IOTP}						Units
	Speed Grade						Speed Grade						Speed Grade						
	1.0V				0.95V	0.9V	1.0V				0.95V	0.9V	1.0V				0.95V	0.9V	
	-3	-2/ -2LE	-1	-1Q/ -1M	-1LI	-2LE	-3	-2/ -2LE	-1	-1Q/ -1M	-1LI	-2LE	-3	-2/ -2LE	-1	-1Q/ -1M	-1LI	-2LE	
LVCMOS18_S16	0.74	0.83	0.89	0.97	0.89	0.94	1.52	1.65	1.90	1.90	1.90	2.13	1.54	1.68	1.91	1.91	1.91	1.77	ns
LVCMOS18_S24	0.74	0.83	0.89	0.97	0.89	0.94	1.60	1.72	1.98	2.40	1.98	2.21	1.62	1.75	1.99	2.41	1.99	1.84	ns
LVCMOS18_F4	0.74	0.83	0.89	0.97	0.89	0.94	1.45	1.57	1.82	1.82	1.82	2.05	1.46	1.60	1.84	1.84	1.84	1.69	ns
LVCMOS18_F8	0.74	0.83	0.89	0.97	0.89	0.94	1.68	1.80	2.06	2.06	2.06	2.29	1.70	1.83	2.07	2.07	2.07	1.92	ns
LVCMOS18_F12	0.74	0.83	0.89	0.97	0.89	0.94	1.68	1.80	2.06	2.06	2.06	2.29	1.70	1.83	2.07	2.07	2.07	1.92	ns
LVCMOS18_F16	0.74	0.83	0.89	0.97	0.89	0.94	1.40	1.52	1.77	1.78	1.77	2.00	1.42	1.55	1.79	1.79	1.79	1.64	ns
LVCMOS18_F24	0.74	0.83	0.89	0.97	0.89	0.94	1.34	1.46	1.71	2.28	1.71	1.94	1.35	1.49	1.73	2.29	1.73	1.58	ns
LVCMOS15_S4	0.77	0.86	0.93	0.96	0.93	0.98	2.05	2.18	2.43	2.43	2.43	2.50	2.07	2.21	2.45	2.45	2.45	2.14	ns
LVCMOS15_S8	0.77	0.86	0.93	0.96	0.93	0.98	2.09	2.21	2.46	2.46	2.46	2.69	2.10	2.24	2.48	2.48	2.48	2.33	ns
LVCMOS15_S12	0.77	0.86	0.93	0.96	0.93	0.98	1.59	1.71	1.96	1.96	1.96	2.19	1.60	1.74	1.98	1.98	1.98	1.83	ns
LVCMOS15_S16	0.77	0.86	0.93	0.96	0.93	0.98	1.59	1.71	1.96	1.96	1.96	2.19	1.60	1.74	1.98	1.98	1.98	1.83	ns
LVCMOS15_F4	0.77	0.86	0.93	0.96	0.93	0.98	1.85	1.97	2.23	2.23	2.23	2.27	1.87	2.00	2.24	2.24	2.24	1.91	ns
LVCMOS15_F8	0.77	0.86	0.93	0.96	0.93	0.98	1.60	1.72	1.98	1.98	1.98	2.21	1.62	1.75	1.99	1.99	1.99	1.84	ns
LVCMOS15_F12	0.77	0.86	0.93	0.96	0.93	0.98	1.35	1.47	1.73	1.73	1.73	1.96	1.37	1.50	1.74	1.74	1.74	1.59	ns
LVCMOS15_F16	0.77	0.86	0.93	0.96	0.93	0.98	1.34	1.46	1.71	2.07	1.71	1.94	1.35	1.49	1.73	2.09	1.73	1.58	ns
LVCMOS12_S4	0.87	0.95	1.02	1.19	1.02	1.08	2.57	2.69	2.95	2.95	2.95	3.18	2.59	2.72	2.96	2.96	2.96	2.81	ns
LVCMOS12_S8	0.87	0.95	1.02	1.19	1.02	1.08	2.09	2.21	2.46	2.46	2.46	2.69	2.10	2.24	2.48	2.48	2.48	2.33	ns
LVCMOS12_S12	0.87	0.95	1.02	1.19	1.02	1.08	1.79	1.91	2.17	2.17	2.17	2.40	1.81	1.94	2.18	2.18	2.18	2.03	ns
LVCMOS12_F4	0.87	0.95	1.02	1.19	1.02	1.08	1.98	2.10	2.35	2.35	2.35	2.58	1.99	2.13	2.37	2.37	2.37	2.22	ns
LVCMOS12_F8	0.87	0.95	1.02	1.19	1.02	1.08	1.54	1.66	1.92	1.92	1.92	2.15	1.56	1.69	1.93	1.93	1.93	1.78	ns
LVCMOS12_F12	0.87	0.95	1.02	1.19	1.02	1.08	1.38	1.51	1.76	1.76	1.76	1.97	1.40	1.54	1.77	1.77	1.77	1.61	ns
SSTL135_S	0.67	0.75	0.82	0.88	0.82	0.87	1.35	1.47	1.73	1.73	1.73	1.93	1.37	1.50	1.74	1.74	1.74	1.56	ns
SSTL15_S	0.60	0.68	0.75	0.75	0.75	0.80	1.30	1.43	1.68	1.71	1.68	1.88	1.32	1.46	1.69	1.73	1.69	1.52	ns
SSTL18_I_S	0.67	0.75	0.82	0.86	0.82	0.87	1.67	1.79	2.04	2.04	2.04	2.24	1.68	1.82	2.06	2.06	2.06	1.88	ns
SSTL18_II_S	0.67	0.75	0.82	0.88	0.82	0.85	1.31	1.43	1.68	1.68	1.68	1.91	1.32	1.46	1.70	1.70	1.70	1.55	ns
DIFF_SSTL135_S	0.68	0.76	0.83	0.88	0.83	0.87	1.35	1.47	1.73	1.73	1.73	1.93	1.37	1.50	1.74	1.74	1.74	1.56	ns
DIFF_SSTL15_S	0.68	0.76	0.83	0.88	0.83	0.87	1.30	1.43	1.68	1.71	1.68	1.88	1.32	1.46	1.69	1.73	1.69	1.52	ns
DIFF_SSTL18_I_S	0.71	0.79	0.86	0.88	0.86	0.87	1.68	1.80	2.06	2.06	2.06	2.24	1.70	1.83	2.07	2.07	2.07	1.88	ns
DIFF_SSTL18_II_S	0.71	0.79	0.86	0.88	0.86	0.87	1.38	1.51	1.76	1.76	1.76	1.94	1.40	1.54	1.77	1.77	1.77	1.58	ns

Table 17: **IOB High Range (HR) Switching Characteristics *(Cont'd)***

I/O Standard	T_{IOPI}						T_{IOOP}						T_{IOTP}						Units
	Speed Grade						Speed Grade						Speed Grade						
	1.0V				0.95V	0.9V	1.0V				0.95V	0.9V	1.0V				0.95V	0.9V	
	-3	-2/ -2LE	-1	-1Q/ -1M	-1LI	-2LE	-3	-2/ -2LE	-1	-1Q/ -1M	-1LI	-2LE	-3	-2/ -2LE	-1	-1Q/ -1M	-1LI	-2LE	
SSTL135_F	0.67	0.75	0.82	0.88	0.82	0.87	1.12	1.24	1.49	1.49	1.49	1.71	1.13	1.27	1.51	1.51	1.51	1.34	ns
SSTL15_F	0.60	0.68	0.75	0.75	0.75	0.80	1.07	1.19	1.45	1.45	1.45	1.68	1.09	1.22	1.46	1.46	1.46	1.31	ns
SSTL18_I_F	0.67	0.75	0.82	0.86	0.82	0.87	1.12	1.24	1.49	1.53	1.49	1.72	1.13	1.27	1.51	1.54	1.51	1.36	ns
SSTL18_II_F	0.67	0.75	0.82	0.88	0.82	0.85	1.12	1.24	1.49	1.51	1.49	1.71	1.13	1.27	1.51	1.52	1.51	1.34	ns
DIFF_SSTL135_F	0.68	0.76	0.83	0.88	0.83	0.87	1.12	1.24	1.49	1.49	1.49	1.71	1.13	1.27	1.51	1.51	1.51	1.34	ns
DIFF_SSTL15_F	0.68	0.76	0.83	0.88	0.83	0.87	1.07	1.19	1.45	1.45	1.45	1.68	1.09	1.22	1.46	1.46	1.46	1.31	ns
DIFF_SSTL18_I_F	0.71	0.79	0.86	0.88	0.86	0.87	1.23	1.35	1.60	1.60	1.60	1.80	1.24	1.38	1.62	1.62	1.62	1.44	ns
DIFF_SSTL18_II_F	0.71	0.79	0.86	0.88	0.86	0.87	1.21	1.33	1.59	1.59	1.59	1.79	1.23	1.36	1.60	1.60	1.60	1.42	ns

Table 18 specifies the values of T_{IOTPHZ} and $T_{IOIBUFDISABLE}$. T_{IOTPHZ} is described as the delay from the T pin to the IOB pad through the output buffer of an IOB pad, when 3-state is enabled (i.e., a high impedance state). $T_{IOIBUFDISABLE}$ is described as the IOB delay from IBUFDISABLE to O output. In HR I/O banks, the internal IN_TERM termination turn-off time is always faster than T_{IOTPHZ} when the INTERMDISABLE pin is used.

Table 18: **IOB 3-state Output Switching Characteristics**

Symbol	Description	Speed Grade						Units
		1.0V				0.95V	0.9V	
		-3	-2/-2LE	-1	-1Q/-1M	-1LI	-2LE	
T_{IOTPHZ}	T input to pad high-impedance	2.06	2.19	2.37	2.37	2.37	2.03	ns
$T_{IOIBUFDISABLE}$	IBUF turn-on time from IBUFDISABLE to O output	2.11	2.30	2.60	2.60	2.60	2.17	ns

I/O Standard Adjustment Measurement Methodology

Input Delay Measurements

Table 19 shows the test setup parameters used for measuring input delay.

Table 19: **Input Delay Measurement Methodology**

Description	I/O Standard Attribute	V_L (1)	V_H (1)	V_{MEAS} (3)(5)	V_{REF} (2)(4)
LVCMOS, 1.2V	LVCMOS12	0.1	1.1	0.6	–
LVCMOS, 1.5V	LVCMOS15	0.1	1.4	0.75	–
LVCMOS, 1.8V	LVCMOS18	0.1	1.7	0.9	–
LVCMOS, 2.5V	LVCMOS25	0.1	2.4	1.25	–
LVCMOS, 3.3V	LVCMOS33	0.1	3.2	1.65	–
LVTTL, 3.3V	LVTTL	0.1	3.2	1.65	–
MOBILE_DDR, 1.8V	MOBILE_DDR	0.1	1.7	0.9	–
PCI33, 3.3V	PCI33_3	0.1	3.2	1.65	–
HSTL (High-Speed Transceiver Logic), Class I, 1.2V	HSTL_I_12	V_{REF} – 0.5	V_{REF} + 0.5	V_{REF}	0.60

Table 19: **Input Delay Measurement Methodology *(Cont'd)***

Description	I/O Standard Attribute	V_L (1)	V_H (1)	V_{MEAS} (3)(5)	V_{REF} (2)(4)
HSTL, Class I & II, 1.5V	HSTL_I, HSTL_II	V_{REF} – 0.65	V_{REF} + 0.65	V_{REF}	0.75
HSTL, Class I & II, 1.8V	HSTL_I_18, HSTL_II_18	V_{REF} – 0.8	V_{REF} + 0.8	V_{REF}	0.90
HSUL (High-Speed Unterminated Logic), 1.2V	HSUL_12	V_{REF} – 0.5	V_{REF} + 0.5	V_{REF}	0.60
SSTL (Stub Terminated Transceiver Logic), 1.2V	SSTL12	V_{REF} – 0.5	V_{REF} + 0.5	V_{REF}	0.60
SSTL, 1.35V	SSTL135, SSTL135_R	V_{REF} – 0.575	V_{REF} + 0.575	V_{REF}	0.675
SSTL, 1.5V	SSTL15, SSTL15_R	V_{REF} – 0.65	V_{REF} + 0.65	V_{REF}	0.75
SSTL, Class I & II, 1.8V	SSTL18_I, SSTL18_II	V_{REF} – 0.8	V_{REF} + 0.8	V_{REF}	0.90
DIFF_MOBILE_DDR, 1.8V	DIFF_MOBILE_DDR	0.9 – 0.125	0.9 + 0.125	0 (5)	–
DIFF_HSTL, Class I, 1.2V	DIFF_HSTL_I_12	0.6 – 0.125	0.6 + 0.125	0 (5)	–
DIFF_HSTL, Class I & II,1.5V	DIFF_HSTL_I, DIFF_HSTL_II	0.75 – 0.125	0.75 + 0.125	0 (5)	–
DIFF_HSTL, Class I & II, 1.8V	DIFF_HSTL_I_18, DIFF_HSTL_II_18	0.9 – 0.125	0.9 + 0.125	0 (5)	–
DIFF_HSUL, 1.2V	DIFF_HSUL_12	0.6 – 0.125	0.6 + 0.125	0 (5)	–
DIFF_SSTL135/DIFF_SSTL135_R, 1.35V	DIFF_SSTL135, DIFF_SSTL135_R	0.675 – 0.125	0.675 + 0.125	0 (5)	–
DIFF_SSTL15/DIFF_SSTL15_R, 1.5V	DIFF_SSTL15, DIFF_SSTL15_R	0.75 – 0.125	0.75 + 0.125	0 (5)	–
DIFF_SSTL18_I/DIFF_SSTL18_II, 1.8V	DIFF_SSTL18_I, DIFF_SSTL18_II	0.9 – 0.125	0.9 + 0.125	0 (5)	–
LVDS_25, 2.5V	LVDS_25	1.2 – 0.125	1.2 + 0.125	0 (5)	–
BLVDS_25, 2.5V	BLVDS_25	1.25 – 0.125	1.25 + 0.125	0 (5)	–
MINI_LVDS_25, 2.5V	MINI_LVDS_25	1.25 – 0.125	1.25 + 0.125	0 (5)	–
PPDS_25	PPDS_25	1.25 – 0.125	1.25 + 0.125	0 (5)	–
RSDS_25	RSDS_25	1.25 – 0.125	1.25 + 0.125	0 (5)	–
TMDS_33	TMDS_33	3 – 0.125	3 + 0.125	0 (5)	–

Notes:

1. Input waveform switches between V_L and V_H.
2. Measurements are made at typical, minimum, and maximum V_{REF} values. Reported delays reflect worst case of these measurements. V_{REF} values listed are typical.
3. Input voltage level from which measurement starts.
4. This is an input voltage reference that bears no relation to the V_{REF} / V_{MEAS} parameters found in IBIS models and/or noted in Figure 1.
5. The value given is the differential input voltage.

Output Delay Measurements

Output delays are measured with short output traces. Standard termination was used for all testing. The propagation delay of the trace is characterized separately and subtracted from the final measurement, and is therefore not included in the generalized test setups shown in Figure 1 and Figure 2.

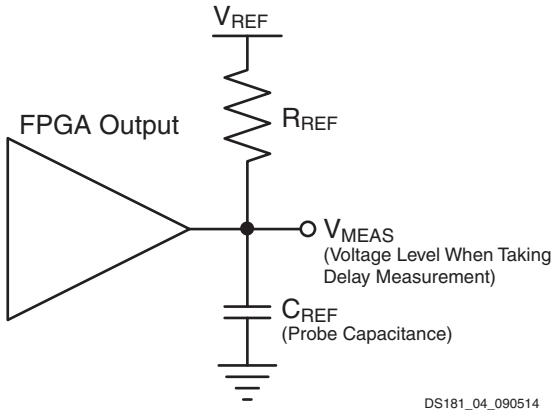

Figure 1: **Single-Ended Test Setup**

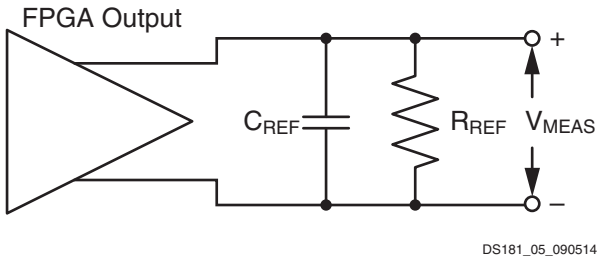

Figure 2: **Differential Test Setup**

Parameters V_{REF}, R_{REF}, C_{REF}, and V_{MEAS} fully describe the test conditions for each I/O standard. The most accurate prediction of propagation delay in any given application can be obtained through IBIS simulation, using this method:

1. Simulate the output driver of choice into the generalized test setup using values from Table 20.
2. Record the time to V_{MEAS}.
3. Simulate the output driver of choice into the actual PCB trace and load using the appropriate IBIS model or capacitance value to represent the load.
4. Record the time to V_{MEAS}.
5. Compare the results of step 2 and step 4. The increase or decrease in delay yields the actual propagation delay of the PCB trace.

Table 20: **Output Delay Measurement Methodology**

Description	I/O Standard Attribute	R_{REF} (Ω)	C_{REF}[(1)] (pF)	V_{MEAS} (V)	V_{REF} (V)
LVCMOS, 1.2V	LVCMOS12	1M	0	0.6	0
LVCMOS, 1.5V	LVCMOS15	1M	0	0.75	0
LVCMOS, 1.8V	LVCMOS18	1M	0	0.9	0
LVCMOS, 2.5V	LVCMOS25	1M	0	1.25	0
LVCMOS, 3.3V	LVCMOS33	1M	0	1.65	0
LVTTL, 3.3V	LVTTL	1M	0	1.65	0
PCI33, 3.3V	PCI33_3	25	10	1.65	0

Table 20: **Output Delay Measurement Methodology *(Cont'd)***

Description	I/O Standard Attribute	R_{REF} (Ω)	C_{REF}[1] (pF)	V_{MEAS} (V)	V_{REF} (V)
HSTL (High-Speed Transceiver Logic), Class I, 1.2V	HSTL_I_12	50	0	V_{REF}	0.6
HSTL, Class I, 1.5V	HSTL_I	50	0	V_{REF}	0.75
HSTL, Class II, 1.5V	HSTL_II	25	0	V_{REF}	0.75
HSTL, Class I, 1.8V	HSTL_I_18	50	0	V_{REF}	0.9
HSTL, Class II, 1.8V	HSTL_II_18	25	0	V_{REF}	0.9
HSUL (High-Speed Unterminated Logic), 1.2V	HSUL_12	50	0	V_{REF}	0.6
SSTL12, 1.2V	SSTL12	50	0	V_{REF}	0.6
SSTL135/SSTL135_R, 1.35V	SSTL135, SSTL135_R	50	0	V_{REF}	0.675
SSTL15/SSTL15_R, 1.5V	SSTL15, SSTL15_R	50	0	V_{REF}	0.75
SSTL (Stub Series Terminated Logic), Class I & Class II, 1.8V	SSTL18_I, SSTL18_II	50	0	V_{REF}	0.9
DIFF_MOBILE_DDR, 1.8V	DIFF_MOBILE_DDR	50	0	V_{REF}	0.9
DIFF_HSTL, Class I, 1.2V	DIFF_HSTL_I_12	50	0	V_{REF}	0.6
DIFF_HSTL, Class I & II, 1.5V	DIFF_HSTL_I, DIFF_HSTL_II	50	0	V_{REF}	0.75
DIFF_HSTL, Class I & II, 1.8V	DIFF_HSTL_I_18, DIFF_HSTL_II_18	50	0	V_{REF}	0.9
DIFF_HSUL_12, 1.2V	DIFF_HSUL_12	50	0	V_{REF}	0.6
DIFF_SSTL135/DIFF_SSTL135_R, 1.35V	DIFF_SSTL135, DIFF_SSTL135_R	50	0	V_{REF}	0.675
DIFF_SSTL15/DIFF_SSTL15_R, 1.5V	DIFF_SSTL15, DIFF_SSTL15_R	50	0	V_{REF}	0.75
DIFF_SSTL18, Class I & II, 1.8V	DIFF_SSTL18_I, DIFF_SSTL18_II	50	0	V_{REF}	0.9
LVDS, 2.5V	LVDS_25	100	0	0[2]	0
BLVDS (Bus LVDS), 2.5V	BLVDS_25	100	0	0[2]	0
Mini LVDS, 2.5V	MINI_LVDS_25	100	0	0[2]	0
PPDS_25	PPDS_25	100	0	0[2]	0
RSDS_25	RSDS_25	100	0	0[2]	0
TMDS_33	TMDS_33	50	0	0[2]	3.3

Notes:

1. C_{REF} is the capacitance of the probe, nominally 0 pF.
2. The value given is the differential output voltage.

Input/Output Logic Switching Characteristics

Table 21: **ILOGIC Switching Characteristics**

Symbol	Description	Speed Grade						Units
		1.0V				0.95V	0.9V	
		-3	-2/-2LE	-1	-1Q/-1M	-1LI	-2LE	
Setup/Hold								
T_{ICE1CK}/ T_{ICKCE1}	CE1 pin setup/hold with respect to CLK	0.48/0.02	0.54/0.02	0.76/0.02	0.76/0.02	0.76/0.02	0.50/–0.07	ns
T_{ISRCK}/ T_{ICKSR}	SR pin setup/hold with respect to CLK	0.60/0.01	0.70/0.01	1.13/0.01	1.13/0.01	1.13/0.01	0.88/–0.35	ns
T_{IDOCK}/ T_{IOCKD}	D pin setup/hold with respect to CLK without Delay	0.01/0.27	0.01/0.29	0.01/0.33	0.01/0.33	0.01/0.33	0.01/0.33	ns
T_{IDOCKD}/ T_{IOCKDD}	DDLY pin setup/hold with respect to CLK (using IDELAY)	0.02/0.27	0.02/0.29	0.02/0.33	0.02/0.33	0.02/0.33	0.01/0.33	ns
Combinatorial								
T_{IDI}	D pin to O pin propagation delay, no Delay	0.11	0.11	0.13	0.13	0.13	0.14	ns
T_{IDID}	DDLY pin to O pin propagation delay (using IDELAY)	0.11	0.12	0.14	0.14	0.14	0.15	ns
Sequential Delays								
T_{IDLO}	D pin to Q1 pin using flip-flop as a latch without Delay	0.41	0.44	0.51	0.51	0.51	0.54	ns
T_{IDLOD}	DDLY pin to Q1 pin using flip-flop as a latch (using IDELAY)	0.41	0.44	0.51	0.51	0.51	0.55	ns
T_{ICKQ}	CLK to Q outputs	0.53	0.57	0.66	0.66	0.66	0.71	ns
T_{RQ_ILOGIC}	SR pin to OQ/TQ out	0.96	1.08	1.32	1.32	1.32	1.32	ns
T_{GSRQ_ILOGIC}	Global set/reset to Q outputs	7.60	7.60	10.51	10.51	10.51	11.39	ns
Set/Reset								
T_{RPW_ILOGIC}	Minimum pulse width, SR inputs	0.61	0.72	0.72	0.72	0.72	0.72	ns, Min

Table 22: **OLOGIC Switching Characteristics**

Symbol	Description	Speed Grade						Units
		1.0V				0.95V	0.9V	
		-3	-2/-2LE	-1	-1Q/-1M	-1LI	-2LE	
Setup/Hold								
T_{ODCK}/ T_{OCKD}	D1/D2 pins setup/hold with respect to CLK	0.67/–0.11	0.71/–0.11	0.84/–0.11	0.84/–0.06	0.84/–0.11	0.64/0.03	ns
T_{OOCECK}/ T_{OCKOCE}	OCE pin setup/hold with respect to CLK	0.32/0.58	0.34/0.58	0.51/0.58	0.51/0.58	0.51/0.58	0.28/0.01	ns
T_{OSRCK}/ T_{OCKSR}	SR pin setup/hold with respect to CLK	0.37/0.21	0.44/0.21	0.80/0.21	0.80/0.21	0.80/0.21	0.62/–0.25	ns
T_{OTCK}/ T_{OCKT}	T1/T2 pins setup/hold with respect to CLK	0.69/–0.14	0.73/–0.14	0.89/–0.14	0.89/–0.11	0.89/–0.14	0.66/0.02	ns
T_{OTCECK}/ T_{OCKTCE}	TCE pin setup/hold with respect to CLK	0.32/0.01	0.34/0.01	0.51/0.01	0.51/0.10	0.51/0.01	0.24/0.05	ns

Table 22: **OLOGIC Switching Characteristics *(Cont'd)***

Symbol	Description	Speed Grade						Units
		1.0V				0.95V	0.9V	
		-3	-2/-2LE	-1	-1Q/-1M	-1LI	-2LE	
Combinatorial								
T_{ODQ}	D1 to OQ out or T1 to TQ out	0.83	0.96	1.16	1.16	1.16	1.36	ns
Sequential Delays								
T_{OCKQ}	CLK to OQ/TQ out	0.47	0.49	0.56	0.56	0.56	0.63	ns
T_{RQ_OLOGIC}	SR pin to OQ/TQ out	0.72	0.80	0.95	0.95	0.95	1.12	ns
T_{GSRQ_OLOGIC}	Global set/reset to Q outputs	7.60	7.60	10.51	10.51	10.51	11.39	ns
Set/Reset								
T_{RPW_OLOGIC}	Minimum pulse width, SR inputs	0.64	0.74	0.74	0.74	0.74	0.74	ns, Min

Input Serializer/Deserializer Switching Characteristics

Table 23: **ISERDES Switching Characteristics**

Symbol	Description	Speed Grade						Units
		1.0V				0.95V	0.9V	
		-3	-2/-2LE	-1	-1Q/-1M	-1LI	-2LE	
Setup/Hold for Control Lines								
$T_{ISCCK_BITSLIP}$/ $T_{ISCKC_BITSLIP}$	BITSLIP pin setup/hold with respect to CLKDIV	0.01/0.14	0.02/0.15	0.02/0.17	0.02/0.17	0.02/0.17	0.02/0.21	ns
T_{ISCCK_CE} / T_{ISCKC_CE}(2)	CE pin setup/hold with respect to CLK (for CE1)	0.45/–0.01	0.50/–0.01	0.72/–0.01	0.72/–0.01	0.72/–0.01	0.45/–0.11	ns
T_{ISCCK_CE2} / T_{ISCKC_CE2}(2)	CE pin setup/hold with respect to CLKDIV (for CE2)	–0.10/0.33	–0.10/0.36	–0.10/0.40	–0.10/0.40	–0.10/0.40	–0.17/0.40	ns
Setup/Hold for Data Lines								
T_{ISDCK_D} / T_{ISCKD_D}	D pin setup/hold with respect to CLK	–0.02/0.12	–0.02/0.14	–0.02/0.17	–0.02/0.17	–0.02/0.17	–0.04/0.19	ns
T_{ISDCK_DDLY} / T_{ISCKD_DDLY}	DDLY pin setup/hold with respect to CLK (using IDELAY)(1)	–0.02/0.12	–0.02/0.14	–0.02/0.17	–0.02/0.17	–0.02/0.17	–0.03/0.19	ns
$T_{ISDCK_D_DDR}$ / $T_{ISCKD_D_DDR}$	D pin setup/hold with respect to CLK at DDR mode	–0.02/0.12	–0.02/0.14	–0.02/0.17	–0.02/0.17	–0.02/0.17	–0.04/0.19	ns
$T_{ISDCK_DDLY_DDR}$/ $T_{ISCKD_DDLY_DDR}$	D pin setup/hold with respect to CLK at DDR mode (using IDELAY)(1)	0.12/0.12	0.14/0.14	0.17/0.17	0.17/0.17	0.17/0.17	0.19/0.19	ns
Sequential Delays								
T_{ISCKO_Q}	CLKDIV to out at Q pin	0.53	0.54	0.66	0.66	0.66	0.67	ns
Propagation Delays								
T_{ISDO_DO}	D input to DO output pin	0.11	0.11	0.13	0.13	0.13	0.14	ns

Notes:

1. Recorded at 0 tap value.
2. T_{ISCCK_CE2} and T_{ISCKC_CE2} are reported as T_{ISCCK_CE}/T_{ISCKC_CE} in the timing report.

Output Serializer/Deserializer Switching Characteristics

Table 24: **OSERDES Switching Characteristics**

Symbol	Description	Speed Grade						Units
		1.0V				0.95V	0.9V	
		-3	-2/-2LE	-1	-1Q/-1M	-1LI	-2LE	
Setup/Hold								
T_{OSDCK_D}/ T_{OSCKD_D}	D input setup/hold with respect to CLKDIV	0.42/0.03	0.45/0.03	0.63/0.03	0.63/0.08	0.63/0.03	0.44/–0.02	ns
T_{OSDCK_T}/ T_{OSCKD_T}(1)	T input setup/hold with respect to CLK	0.69/–0.13	0.73/–0.13	0.88/–0.13	0.88/–0.13	0.88/–0.13	0.66/–0.25	ns
T_{OSDCK_T2}/ T_{OSCKD_T2}(1)	T input setup/hold with respect to CLKDIV	0.31/–0.13	0.34/–0.13	0.39/–0.13	0.39/–0.13	0.39/–0.13	0.46/–0.25	ns
T_{OSCCK_OCE}/ T_{OSCKC_OCE}	OCE input setup/hold with respect to CLK	0.32/0.58	0.34/0.58	0.51/0.58	0.51/0.58	0.51/0.58	0.28/–0.04	ns
T_{OSCCK_S}	SR (reset) input setup with respect to CLKDIV	0.47	0.52	0.85	0.85	0.85	0.70	ns
T_{OSCCK_TCE}/ T_{OSCKC_TCE}	TCE input setup/hold with respect to CLK	0.32/0.01	0.34/0.01	0.51/0.01	0.51/0.10	0.51/0.01	0.24/0.00	ns
Sequential Delays								
T_{OSCKO_OQ}	Clock to out from CLK to OQ	0.40	0.42	0.48	0.48	0.48	0.54	ns
T_{OSCKO_TQ}	Clock to out from CLK to TQ	0.47	0.49	0.56	0.56	0.56	0.63	ns
Combinatorial								
T_{OSDO_TTQ}	T input to TQ Out	0.83	0.92	1.11	1.11	1.11	1.18	ns

Notes:

1. T_{OSDCK_T2} and T_{OSCKD_T2} are reported as T_{OSDCK_T}/T_{OSCKD_T} in the timing report.

Input/Output Delay Switching Characteristics

Table 25: **Input/Output Delay Switching Characteristics**

Symbol	Description	Speed Grade						Units
		1.0V				0.95V	0.9V	
		-3	-2/-2LE	-1	-1Q/-1M	-1LI	-2LE	
IDELAYCTRL								
T_{DLYCCO_RDY}	Reset to ready for IDELAYCTRL	3.67	3.67	3.67	3.67	3.67	3.67	µs
$F_{IDELAYCTRL_REF}$	Attribute REFCLK frequency = 200.00(1)	200.00	200.00	200.00	200.00	200.00	200.00	MHz
	Attribute REFCLK frequency = 300.00(1)	300.00	300.00	300.00	300.00	300.00	300.00	MHz
	Attribute REFCLK frequency = 400.00(1)	400.00	400.00	N/A	N/A	N/A	N/A	MHz
IDELAYCTRL_REF_PRECISION	REFCLK precision	±10	±10	±10	±10	±10	±10	MHz
$T_{IDELAYCTRL_RPW}$	Minimum Reset pulse width	59.28	59.28	59.28	59.28	59.28	59.28	ns
IDELAY								
$T_{IDELAYRESOLUTION}$	IDELAY chain delay resolution	$1/(32 \times 2 \times F_{REF})$						µs
$T_{IDELAYPAT_JIT}$	Pattern dependent period jitter in delay chain for clock pattern.(2)	0	0	0	0	0	0	ps per tap
	Pattern dependent period jitter in delay chain for random data pattern (PRBS 23)(3)	±5	±5	±5	±5	±5	±5	ps per tap
	Pattern dependent period jitter in delay chain for random data pattern (PRBS 23)(4)	±9	±9	±9	±9	±9	±9	ps per tap
$T_{IDELAY_CLK_MAX}$	Maximum frequency of CLK input to IDELAY	680.00	680.00	600.00	600.00	600.00	520.00	MHz
T_{IDCCK_CE} / T_{IDCKC_CE}	CE pin setup/hold with respect to C for IDELAY	0.12/0.11	0.16/0.13	0.21/0.16	0.21/0.16	0.21/0.16	0.14/0.16	ns
T_{IDCCK_INC}/ T_{IDCKC_INC}	INC pin setup/hold with respect to C for IDELAY	0.12/0.16	0.14/0.18	0.16/0.22	0.16/0.23	0.16/0.22	0.10/0.23	ns
T_{IDCCK_RST}/ T_{IDCKC_RST}	RST pin setup/hold with respect to C for IDELAY	0.15/0.09	0.16/0.11	0.18/0.14	0.18/0.14	0.18/0.14	0.22/0.19	ns
$T_{IDDO_IDATAIN}$	Propagation delay through IDELAY	Note 5	Note 5	Note 5	Note 5	Note 5	Note 5	ps

Notes:

1. Average Tap Delay at 200 MHz = 78 ps, at 300 MHz = 52 ps, and at 400 MHz = 39 ps.
2. When HIGH_PERFORMANCE mode is set to TRUE or FALSE.
3. When HIGH_PERFORMANCE mode is set to TRUE.
4. When HIGH_PERFORMANCE mode is set to FALSE.
5. Delay depends on IDELAY tap setting. See the timing report for actual values.

Table 26: **IO_FIFO Switching Characteristics**

Symbol	Description	Speed Grade						Units
		1.0V				0.95V	0.9V	
		-3	-2/-2LE	-1	-1Q/-1M	-1LI	-2LE	
IO_FIFO Clock to Out Delays								
T_{OFFCKO_DO}	RDCLK to Q outputs	0.55	0.60	0.68	0.68	0.68	0.81	ns
T_{CKO_FLAGS}	Clock to IO_FIFO flags	0.55	0.61	0.77	0.77	0.77	0.79	ns
Setup/Hold								
T_{CCK_D}/T_{CKC_D}	D inputs to WRCLK	0.47/0.02	0.51/0.02	0.58/0.02	0.58/0.18	0.58/0.02	0.76/0.09	ns
T_{IFFCCK_WREN}/ T_{IFFCKC_WREN}	WREN to WRCLK	0.42/–0.01	0.47/–0.01	0.53/–0.01	0.53/–0.01	0.53/–0.01	0.70/–0.05	ns
T_{OFFCCK_RDEN}/ T_{OFFCKC_RDEN}	RDEN to RDCLK	0.53/0.02	0.58/0.02	0.66/0.02	0.66/0.02	0.66/0.02	0.79/–0.02	ns
Minimum Pulse Width								
$T_{PWH_IO_FIFO}$	RESET, RDCLK, WRCLK	1.62	2.15	2.15	2.15	2.15	2.15	ns
$T_{PWL_IO_FIFO}$	RESET, RDCLK, WRCLK	1.62	2.15	2.15	2.15	2.15	2.15	ns
Maximum Frequency								
F_{MAX}	RDCLK and WRCLK	266.67	200.00	200.00	200.00	200.00	200.00	MHz

CLB Switching Characteristics

Table 27: **CLB Switching Characteristics**

Symbol	Description	Speed Grade						Units
		1.0V				0.95V	0.9V	
		-3	-2/-2LE	-1	-1Q/-1M	-1LI	-2LE	
Combinatorial Delays								
T_{ILO}	An – Dn LUT address to A	0.10	0.11	0.13	0.13	0.13	0.15	ns, Max
T_{ILO_2}	An – Dn LUT address to AMUX/CMUX	0.27	0.30	0.36	0.36	0.36	0.41	ns, Max
T_{ILO_3}	An – Dn LUT address to BMUX_A	0.42	0.46	0.55	0.55	0.55	0.65	ns, Max
T_{ITO}	An – Dn inputs to A – D Q outputs	0.94	1.05	1.27	1.27	1.27	1.51	ns, Max
T_{AXA}	AX inputs to AMUX output	0.62	0.69	0.84	0.84	0.84	1.01	ns, Max
T_{AXB}	AX inputs to BMUX output	0.58	0.66	0.83	0.83	0.83	0.98	ns, Max
T_{AXC}	AX inputs to CMUX output	0.60	0.68	0.82	0.82	0.82	0.98	ns, Max
T_{AXD}	AX inputs to DMUX output	0.68	0.75	0.90	0.90	0.90	1.08	ns, Max
T_{BXB}	BX inputs to BMUX output	0.51	0.57	0.69	0.69	0.69	0.82	ns, Max
T_{BXD}	BX inputs to DMUX output	0.62	0.69	0.82	0.82	0.82	0.99	ns, Max
T_{CXC}	CX inputs to CMUX output	0.42	0.48	0.58	0.58	0.58	0.69	ns, Max
T_{CXD}	CX inputs to DMUX output	0.53	0.59	0.71	0.71	0.71	0.86	ns, Max
T_{DXD}	DX inputs to DMUX output	0.52	0.58	0.70	0.70	0.70	0.84	ns, Max
Sequential Delays								
T_{CKO}	Clock to AQ – DQ outputs	0.40	0.44	0.53	0.53	0.53	0.62	ns, Max
T_{SHCKO}	Clock to AMUX – DMUX outputs	0.47	0.53	0.66	0.66	0.66	0.73	ns, Max
Setup and Hold Times of CLB Flip-Flops Before/After Clock CLK								
T_{AS}/T_{AH}	A_N – D_N input to CLK on A – D flip-flops	0.07/0.12	0.09/0.14	0.11/0.18	0.11/0.28	0.11/0.18	0.11/0.22	ns, Min
T_{DICK}/T_{CKDI}	A_X – D_X input to CLK on A – D flip-flops	0.06/0.19	0.07/0.21	0.09/0.26	0.09/0.35	0.09/0.26	0.09/0.33	ns, Min
	A_X – D_X input through MUXs and/or carry logic to CLK on A – D flip-flops	0.59/0.08	0.66/0.09	0.81/0.11	0.81/0.20	0.81/0.11	0.97/0.15	ns, Min
$T_{CECK_CLB}/T_{CKCE_CLB}$	CE input to CLK on A – D flip-flops	0.15/0.00	0.17/0.00	0.21/0.01	0.21/0.13	0.21/0.01	0.34/–0.01	ns, Min
T_{SRCK}/T_{CKSR}	SR input to CLK on A – D flip-flops	0.38/0.03	0.43/0.04	0.53/0.05	0.53/0.18	0.53/0.05	0.62/0.19	ns, Min
Set/Reset								
T_{SRMIN}	SR input minimum pulse width	0.52	0.78	1.04	1.04	1.04	0.95	ns, Min
T_{RQ}	Delay from SR input to AQ – DQ flip-flops	0.53	0.59	0.71	0.71	0.71	0.83	ns, Max
T_{CEO}	Delay from CE input to AQ – DQ flip-flops	0.52	0.58	0.70	0.70	0.70	0.83	ns, Max
F_{TOG}	Toggle frequency (for export control)	1412	1286	1098	1098	1098	1098	MHz

CLB Distributed RAM Switching Characteristics (SLICEM Only)

Table 28: **CLB Distributed RAM Switching Characteristics**

Symbol	Description	Speed Grade						Units
		1.0V				0.95V	0.9V	
		-3	-2/-2LE	-1	-1Q/-1M	-1LI	-2LE	
Sequential Delays								
T_{SHCKO}	Clock to A – B outputs	0.98	1.09	1.32	1.32	1.32	1.54	ns, Max
T_{SHCKO_1}	Clock to AMUX – BMUX outputs	1.37	1.53	1.86	1.86	1.86	2.18	ns, Max
Setup and Hold Times Before/After Clock CLK								
T_{DS_LRAM}/ T_{DH_LRAM}	A – D inputs to CLK	0.54/0.28	0.60/0.30	0.72/0.35	0.72/0.37	0.72/0.35	0.96/0.40	ns, Min
T_{AS_LRAM}/ T_{AH_LRAM}	Address An inputs to clock	0.27/0.55	0.30/0.60	0.37/0.70	0.37/0.71	0.37/0.70	0.43/0.71	ns, Min
	Address An inputs through MUXs and/or carry logic to clock	0.69/0.18	0.77/0.21	0.94/0.26	0.94/0.35	0.94/0.26	1.11/0.31	ns, Min
T_{WS_LRAM}/ T_{WH_LRAM}	WE input to clock	0.38/0.10	0.43/0.12	0.53/0.17	0.53/0.17	0.53/0.17	0.62/0.13	ns, Min
T_{CECK_LRAM}/ T_{CKCE_LRAM}	CE input to CLK	0.39/0.10	0.44/0.11	0.53/0.17	0.53/0.17	0.53/0.17	0.63/0.12	ns, Min
Clock CLK								
T_{MPW_LRAM}	Minimum pulse width	1.05	1.13	1.25	1.25	1.25	1.61	ns, Min
T_{MCP}	Minimum clock period	2.10	2.26	2.50	2.50	2.50	3.21	ns, Min

Notes:

1. T_{SHCKO} also represents the CLK to XMUX output. Refer to the timing report for the CLK to XMUX path.

CLB Shift Register Switching Characteristics (SLICEM Only)

Table 29: **CLB Shift Register Switching Characteristics**

Symbol	Description	Speed Grade						Units
		1.0V				0.95V	0.9V	
		-3	-2/-2LE	-1	-1Q/-1M	-1LI	-2LE	
Sequential Delays								
T_{REG}	Clock to A – D outputs	1.19	1.33	1.61	1.61	1.61	1.89	ns, Max
T_{REG_MUX}	Clock to AMUX – DMUX output	1.58	1.77	2.15	2.15	2.15	2.53	ns, Max
T_{REG_M31}	Clock to DMUX output via M31 output	1.12	1.23	1.46	1.46	1.46	1.68	ns, Max
Setup and Hold Times Before/After Clock CLK								
T_{WS_SHFREG}/ T_{WH_SHFREG}	WE input	0.37/0.10	0.41/0.12	0.51/0.17	0.51/0.17	0.51/0.17	0.59/0.13	ns, Min
T_{CECK_SHFREG}/ T_{CKCE_SHFREG}	CE input to CLK	0.37/0.10	0.42/0.11	0.52/0.17	0.52/0.17	0.52/0.17	0.60/0.12	ns, Min
T_{DS_SHFREG}/ T_{DH_SHFREG}	A – D inputs to CLK	0.33/0.34	0.37/0.37	0.44/0.43	0.44/0.44	0.44/0.43	0.54/0.55	ns, Min
Clock CLK								
T_{MPW_SHFREG}	Minimum pulse width	0.77	0.86	0.98	0.98	0.98	1.22	ns, Min

Block RAM and FIFO Switching Characteristics

Table 30: **Block RAM and FIFO Switching Characteristics**

Symbol	Description	Speed Grade						Units
		1.0V				0.95V	0.9V	
		-3	-2/-2LE	-1	-1Q/-1M	-1LI	-2LE	
Block RAM and FIFO Clock-to-Out Delays								
T_{RCKO_DO} and $T_{RCKO_DO_REG}$[1]	Clock CLK to DOUT output (without output register)[2][3]	1.85	2.13	2.46	2.46	2.46	2.87	ns, Max
	Clock CLK to DOUT output (with output register)[4][5]	0.64	0.74	0.89	0.89	0.89	1.02	ns, Max
$T_{RCKO_DO_ECC}$ and $T_{RCKO_DO_ECC_REG}$	Clock CLK to DOUT output with ECC (without output register)[2][3]	2.77	3.04	3.84	3.84	3.84	5.30	ns, Max
	Clock CLK to DOUT output with ECC (with output register)[4][5]	0.73	0.81	0.94	0.94	0.94	1.11	ns, Max
$T_{RCKO_DO_CASCOUT}$ and $T_{RCKO_DO_CASCOUT_REG}$	Clock CLK to DOUT output with cascade (without output register)[2]	2.61	2.88	3.30	3.30	3.30	3.76	ns, Max
	Clock CLK to DOUT output with cascade (with output register)[4]	1.16	1.28	1.46	1.46	1.46	1.56	ns, Max
T_{RCKO_FLAGS}	Clock CLK to FIFO flags outputs[6]	0.76	0.87	1.05	1.05	1.05	1.14	ns, Max
$T_{RCKO_POINTERS}$	Clock CLK to FIFO pointers outputs[7]	0.94	1.02	1.15	1.15	1.15	1.30	ns, Max
$T_{RCKO_PARITY_ECC}$	Clock CLK to ECCPARITY in ECC encode only mode	0.78	0.85	0.94	0.94	0.94	1.10	ns, Max
$T_{RCKO_SDBIT_ECC}$ and $T_{RCKO_SDBIT_ECC_REG}$	Clock CLK to BITERR (without output register)	2.56	2.81	3.55	3.55	3.55	4.90	ns, Max
	Clock CLK to BITERR (with output register)	0.68	0.76	0.89	0.89	0.89	1.05	ns, Max
$T_{RCKO_RDADDR_ECC}$ and $T_{RCKO_RDADDR_ECC_REG}$	Clock CLK to RDADDR output with ECC (without output register)	0.75	0.88	1.07	1.07	1.07	1.15	ns, Max
	Clock CLK to RDADDR output with ECC (with output register)	0.84	0.93	1.08	1.08	1.08	1.29	ns, Max
Setup and Hold Times Before/After Clock CLK								
T_{RCCK_ADDRA}/ T_{RCKC_ADDRA}	ADDR inputs[8]	0.45/0.31	0.49/0.33	0.57/0.36	0.57/0.52	0.57/0.36	0.77/0.45	ns, Min
$T_{RDCK_DI_WF_NC}$/ $T_{RCKD_DI_WF_NC}$	Data input setup/hold time when block RAM is configured in WRITE_FIRST or NO_CHANGE mode[9]	0.58/0.60	0.65/0.63	0.74/0.67	0.74/0.67	0.74/0.67	0.92/0.76	ns, Min
$T_{RDCK_DI_RF}$/ $T_{RCKD_DI_RF}$	Data input setup/hold time when block RAM is configured in READ_FIRST mode[9]	0.20/0.29	0.22/0.34	0.25/0.41	0.25/0.50	0.25/0.41	0.29/0.38	ns, Min

Table 30: **Block RAM and FIFO Switching Characteristics *(Cont'd)***

Symbol	Description	Speed Grade						Units
		1.0V				0.95V	0.9V	
		-3	-2/-2LE	-1	-1Q/-1M	-1LI	-2LE	
$T_{RDCK_DI_ECC}$/ $T_{RCKD_DI_ECC}$	DIN inputs with block RAM ECC in standard mode(9)	0.50/0.43	0.55/0.46	0.63/0.50	0.63/0.50	0.63/0.50	0.78/0.54	ns, Min
$T_{RDCK_DI_ECCW}$/ $T_{RCKD_DI_ECCW}$	DIN inputs with block RAM ECC encode only(9)	0.93/0.43	1.02/0.46	1.17/0.50	1.17/0.50	1.17/0.50	1.38/0.48	ns, Min
$T_{RDCK_DI_ECC_FIFO}$/ $T_{RCKD_DI_ECC_FIFO}$	DIN inputs with FIFO ECC in standard mode(9)	1.04/0.56	1.15/0.59	1.32/0.64	1.32/0.64	1.32/0.64	1.55/0.77	ns, Min
$T_{RCCK_INJECTBITERR}$/ $T_{RCKC_INJECTBITERR}$	Inject single/double bit error in ECC mode	0.58/0.35	0.64/0.37	0.74/0.40	0.74/0.52	0.74/0.40	0.92/0.48	ns, Min
T_{RCCK_EN}/T_{RCKC_EN}	Block RAM enable (EN) input	0.35/0.20	0.39/0.21	0.45/0.23	0.45/0.41	0.45/0.23	0.57/0.26	ns, Min
T_{RCCK_REGCE}/ T_{RCKC_REGCE}	CE input of output register	0.24/0.15	0.29/0.15	0.36/0.16	0.36/0.39	0.36/0.16	0.40/0.19	ns, Min
T_{RCCK_RSTREG}/ T_{RCKC_RSTREG}	Synchronous RSTREG input	0.29/0.07	0.32/0.07	0.35/0.07	0.35/0.17	0.35/0.07	0.41/0.07	ns, Min
T_{RCCK_RSTRAM}/ T_{RCKC_RSTRAM}	Synchronous RSTRAM input	0.32/0.42	0.34/0.43	0.36/0.46	0.36/0.57	0.36/0.46	0.40/0.47	ns, Min
T_{RCCK_WEA}/ T_{RCKC_WEA}	Write enable (WE) input (block RAM only)	0.44/0.18	0.48/0.19	0.54/0.20	0.54/0.42	0.54/0.20	0.64/0.23	ns, Min
T_{RCCK_WREN}/ T_{RCKC_WREN}	WREN FIFO inputs	0.46/0.30	0.46/0.35	0.47/0.43	0.47/0.43	0.47/0.43	0.77/0.44	ns, Min
T_{RCCK_RDEN}/ T_{RCKC_RDEN}	RDEN FIFO inputs	0.42/0.30	0.43/0.35	0.43/0.43	0.43/0.62	0.43/0.43	0.71/0.50	ns, Min
Reset Delays								
T_{RCO_FLAGS}	Reset RST to FIFO flags/pointers(10)	0.90	0.98	1.10	1.10	1.10	1.25	ns, Max
T_{RREC_RST}/ T_{RREM_RST}	FIFO reset recovery and removal timing(11)	1.87/–0.81	2.07/–0.81	2.37/–0.81	2.37/–0.58	2.37/–0.81	2.44/–0.71	ns, Max
Maximum Frequency								
$F_{MAX_BRAM_WF_NC}$	Block RAM (write first and no change modes) when not in SDP RF mode	509.68	460.83	388.20	388.20	388.20	315.66	MHz
$F_{MAX_BRAM_RF_PERFORMANCE}$	Block RAM (read first, performance mode) when in SDP RF mode but no address overlap between port A and port B	509.68	460.83	388.20	388.20	388.20	315.66	MHz
$F_{MAX_BRAM_RF_DELAYED_WRITE}$	Block RAM (read first, delayed write mode) when in SDP RF mode and there is possibility of overlap between port A and port B addresses	447.63	404.53	339.67	339.67	339.67	268.96	MHz

Table 30: **Block RAM and FIFO Switching Characteristics *(Cont'd)***

Symbol	Description	Speed Grade						Units
		1.0V				0.95V	0.9V	
		-3	-2/-2LE	-1	-1Q/-1M	-1LI	-2LE	
$F_{MAX_CAS_WF_NC}$	Block RAM cascade (write first, no change mode) when cascade but not in RF mode	467.07	418.59	345.78	345.78	345.78	273.30	MHz
$F_{MAX_CAS_RF_PERFORMANCE}$	Block RAM cascade (read first, performance mode) when in cascade with RF mode and no possibility of address overlap/one port is disabled	467.07	418.59	345.78	345.78	345.78	273.30	MHz
$F_{MAX_CAS_RF_DELAYED_WRITE}$	When in cascade RF mode and there is a possibility of address overlap between port A and port B	405.35	362.19	297.35	297.35	297.35	226.60	MHz
F_{MAX_FIFO}	FIFO in all modes without ECC	509.68	460.83	388.20	388.20	388.20	315.66	MHz
F_{MAX_ECC}	Block RAM and FIFO in ECC configuration	410.34	365.10	297.53	297.53	297.53	215.38	MHz

Notes:

1. The timing report shows all of these parameters as T_{RCKO_DO}.
2. T_{RCKO_DOR} includes T_{RCKO_DOW}, T_{RCKO_DOPR}, and T_{RCKO_DOPW} as well as the B port equivalent timing parameters.
3. These parameters also apply to synchronous FIFO with DO_REG = 0.
4. T_{RCKO_DO} includes T_{RCKO_DOP} as well as the B port equivalent timing parameters.
5. These parameters also apply to multirate (asynchronous) and synchronous FIFO with DO_REG = 1.
6. T_{RCKO_FLAGS} includes the following parameters: T_{RCKO_AEMPTY}, T_{RCKO_AFULL}, T_{RCKO_EMPTY}, T_{RCKO_FULL}, T_{RCKO_RDERR}, T_{RCKO_WRERR}.
7. $T_{RCKO_POINTERS}$ includes both $T_{RCKO_RDCOUNT}$ and $T_{RCKO_WRCOUNT}$.
8. The ADDR setup and hold must be met when EN is asserted (even when WE is deasserted). Otherwise, block RAM data corruption is possible.
9. These parameters include both A and B inputs as well as the parity inputs of A and B.
10. T_{RCO_FLAGS} includes the following flags: AEMPTY, AFULL, EMPTY, FULL, RDERR, WRERR, RDCOUNT, and WRCOUNT.
11. RDEN and WREN must be held Low prior to and during reset. The FIFO reset must be asserted for at least five positive clock edges of the slowest clock (WRCLK or RDCLK).

DSP48E1 Switching Characteristics

Table 31: **DSP48E1 Switching Characteristics**

Symbol	Description	Speed Grade						Units
		1.0V				0.95V	0.9V	
		-3	-2/-2LE	-1	-1Q/-1M	-1LI	-2LE	
Setup and Hold Times of Data/Control Pins to the Input Register Clock								
$T_{DSPDCK_A_AREG}$/ $T_{DSPCKD_A_AREG}$	A input to A register CLK	0.26/ 0.12	0.30/ 0.13	0.37/ 0.14	0.37/ 0.28	0.37/ 0.14	0.45/ 0.14	ns
$T_{DSPDCK_B_BREG}$/ $T_{DSPCKD_B_BREG}$	B input to B register CLK	0.33/ 0.15	0.38/ 0.16	0.45/ 0.18	0.45/ 0.25	0.45/ 0.18	0.60/ 0.19	ns
$T_{DSPDCK_C_CREG}$/ $T_{DSPCKD_C_CREG}$	C input to C register CLK	0.17/ 0.17	0.20/ 0.19	0.24/ 0.21	0.24/ 0.26	0.24/ 0.21	0.34/ 0.29	ns
$T_{DSPDCK_D_DREG}$/ $T_{DSPCKD_D_DREG}$	D input to D register CLK	0.25/ 0.25	0.32/ 0.27	0.42/ 0.27	0.42/ 0.42	0.42/ 0.27	0.54/ 0.23	ns
$T_{DSPDCK_ACIN_AREG}$/ $T_{DSPCKD_ACIN_AREG}$	ACIN input to A register CLK	0.23/ 0.12	0.27/ 0.13	0.32/ 0.14	0.32/ 0.17	0.32/ 0.14	0.36/ 0.14	ns
$T_{DSPDCK_BCIN_BREG}$/ $T_{DSPCKD_BCIN_BREG}$	BCIN input to B register CLK	0.25/ 0.15	0.29/ 0.16	0.36/ 0.18	0.36/ 0.18	0.36/ 0.18	0.41/ 0.19	ns
Setup and Hold Times of Data Pins to the Pipeline Register Clock								
$T_{DSPDCK_\{A, B\}_MREG_MULT}$/ $T_{DSPCKD_\{A, B\}_MREG_MULT}$	{A, B} input to M register CLK using multiplier	2.40/ –0.01	2.76/ –0.01	3.29/ –0.01	3.29/ –0.01	3.29/ –0.01	4.31/ –0.07	ns
$T_{DSPDCK_\{A, D\}_ADREG}$/ $T_{DSPCKD_\{A, D\}_ADREG}$	{A, D} input to AD register CLK	1.29/ –0.02	1.48/ –0.02	1.76/ –0.02	1.76/ –0.02	1.76/ –0.02	2.29/ –0.27	ns
Setup and Hold Times of Data/Control Pins to the Output Register Clock								
$T_{DSPDCK_\{A, B\}_PREG_MULT}$/ $T_{DSPCKD_\{A, B\}_PREG_MULT}$	{A, B} input to P register CLK using multiplier	4.02/ –0.28	4.60/ –0.28	5.48/ –0.28	5.48/ –0.28	5.48/ –0.28	6.95/ –0.48	ns
$T_{DSPDCK_D_PREG_MULT}$/ $T_{DSPCKD_D_PREG_MULT}$	D input to P register CLK using multiplier	3.93/ –0.73	4.50/ –0.73	5.35/ –0.73	5.35/ –0.73	5.35/ –0.73	6.73/ –1.68	ns
$T_{DSPDCK_\{A, B\}_PREG}$/ $T_{DSPCKD_\{A, B\}_PREG}$	A or B input to P register CLK not using multiplier	1.73/ –0.28	1.98/ –0.28	2.35/ –0.28	2.35/ –0.28	2.35/ –0.28	2.80/ –0.48	ns
$T_{DSPDCK_C_PREG}$/ $T_{DSPCKD_C_PREG}$	C input to P register CLK not using multiplier	1.54/ –0.26	1.76/ –0.26	2.10/ –0.26	2.10/ –0.26	2.10/ –0.26	2.54/ –0.45	ns
$T_{DSPDCK_PCIN_PREG}$/ $T_{DSPCKD_PCIN_PREG}$	PCIN input to P register CLK	1.32/ –0.15	1.51/ –0.15	1.80/ –0.15	1.80/ –0.15	1.80/ –0.15	2.13/ –0.25	ns
Setup and Hold Times of the CE Pins								
$T_{DSPDCK_\{CEA;CEB\}_\{AREG;BREG\}}$/ $T_{DSPCKD_\{CEA;CEB\}_\{AREG;BREG\}}$	{CEA; CEB} input to {A; B} register CLK	0.35/ 0.06	0.42/ 0.08	0.52/ 0.11	0.52/ 0.11	0.52/ 0.11	0.64/ 0.11	ns
$T_{DSPDCK_CEC_CREG}$/ $T_{DSPCKD_CEC_CREG}$	CEC input to C register CLK	0.28/ 0.10	0.34/ 0.11	0.42/ 0.13	0.42/ 0.13	0.42/ 0.13	0.49/ 0.16	ns
$T_{DSPDCK_CED_DREG}$/ $T_{DSPCKD_CED_DREG}$	CED input to D register CLK	0.36/ –0.03	0.43/ –0.03	0.52/ –0.03	0.52/ –0.03	0.52/ –0.03	0.68/ 0.14	ns
$T_{DSPDCK_CEM_MREG}$/ $T_{DSPCKD_CEM_MREG}$	CEM input to M register CLK	0.17/ 0.18	0.21/ 0.20	0.27/ 0.23	0.27/ 0.23	0.27/ 0.23	0.45/ 0.29	ns
$T_{DSPDCK_CEP_PREG}$/ $T_{DSPCKD_CEP_PREG}$	CEP input to P register CLK	0.36/ 0.01	0.43/ 0.01	0.53/ 0.01	0.53/ 0.01	0.53/ 0.01	0.63/ 0.00	ns

Table 31: **DSP48E1 Switching Characteristics *(Cont'd)***

Symbol	Description	Speed Grade						Units
		1.0V				0.95V	0.9V	
		-3	-2/-2LE	-1	-1Q/-1M	-1LI	-2LE	
Setup and Hold Times of the RST Pins								
$T_{DSPDCK_\{RSTA;\ RSTB\}_\{AREG;\ BREG\}}$/ $T_{DSPCKD_\{RSTA;\ RSTB\}_\{AREG;\ BREG\}}$	{RSTA, RSTB} input to {A, B} register CLK	0.41/ 0.11	0.46/ 0.13	0.55/ 0.15	0.55/ 0.24	0.55/ 0.15	0.63/ 0.40	ns
$T_{DSPDCK_RSTC_CREG}$/ $T_{DSPCKD_RSTC_CREG}$	RSTC input to C register CLK	0.07/ 0.10	0.08/ 0.11	0.09/ 0.12	0.09/ 0.25	0.09/ 0.12	0.13/ 0.11	ns
$T_{DSPDCK_RSTD_DREG}$/ $T_{DSPCKD_RSTD_DREG}$	RSTD input to D register CLK	0.44/ 0.07	0.50/ 0.08	0.59/ 0.09	0.59/ 0.09	0.59/ 0.09	0.67/ 0.08	ns
$T_{DSPDCK_RSTM_MREG}$/ $T_{DSPCKD_RSTM_MREG}$	RSTM input to M register CLK	0.21/ 0.22	0.23/ 0.24	0.27/ 0.28	0.27/ 0.28	0.27/ 0.28	0.28/ 0.35	ns
$T_{DSPDCK_RSTP_PREG}$/ $T_{DSPCKD_RSTP_PREG}$	RSTP input to P register CLK	0.27/ 0.01	0.30/ 0.01	0.35/ 0.01	0.35/ 0.03	0.35/ 0.01	0.43/ 0.00	ns
Combinatorial Delays from Input Pins to Output Pins								
$T_{DSPDO_A_CARRYOUT_MULT}$	A input to CARRYOUT output using multiplier	3.79	4.35	5.18	5.18	5.18	6.61	ns
$T_{DSPDO_D_P_MULT}$	D input to P output using multiplier	3.72	4.26	5.07	5.07	5.07	6.41	ns
$T_{DSPDO_B_P}$	B input to P output not using multiplier	1.53	1.75	2.08	2.08	2.08	2.48	ns
$T_{DSPDO_C_P}$	C input to P output	1.33	1.53	1.82	1.82	1.82	2.22	ns
Combinatorial Delays from Input Pins to Cascading Output Pins								
$T_{DSPDO_\{A;\ B\}_\{ACOUT;\ BCOUT\}}$	{A, B} input to {ACOUT, BCOUT} output	0.55	0.63	0.74	0.74	0.74	0.87	ns
$T_{DSPDO_\{A,\ B\}_CARRYCASCOUT_MULT}$	{A, B} input to CARRYCASCOUT output using multiplier	4.06	4.65	5.54	5.54	5.54	7.03	ns
$T_{DSPDO_D_CARRYCASCOUT_MULT}$	D input to CARRYCASCOUT output using multiplier	3.97	4.54	5.40	5.40	5.40	6.81	ns
$T_{DSPDO_\{A,\ B\}_CARRYCASCOUT}$	{A, B} input to CARRYCASCOUT output not using multiplier	1.77	2.03	2.41	2.41	2.41	2.88	ns
$T_{DSPDO_C_CARRYCASCOUT}$	C input to CARRYCASCOUT output	1.58	1.81	2.15	2.15	2.15	2.62	ns
Combinatorial Delays from Cascading Input Pins to All Output Pins								
$T_{DSPDO_ACIN_P_MULT}$	ACIN input to P output using multiplier	3.65	4.19	5.00	5.00	5.00	6.40	ns
$T_{DSPDO_ACIN_P}$	ACIN input to P output not using multiplier	1.37	1.57	1.88	1.88	1.88	2.44	ns
$T_{DSPDO_ACIN_ACOUT}$	ACIN input to ACOUT output	0.38	0.44	0.53	0.53	0.53	0.63	ns
$T_{DSPDO_ACIN_CARRYCASCOUT_MULT}$	ACIN input to CARRYCASCOUT output using multiplier	3.90	4.47	5.33	5.33	5.33	6.79	ns
$T_{DSPDO_ACIN_CARRYCASCOUT}$	ACIN input to CARRYCASCOUT output not using multiplier	1.61	1.85	2.21	2.21	2.21	2.84	ns
$T_{DSPDO_PCIN_P}$	PCIN input to P output	1.11	1.28	1.52	1.52	1.52	1.82	ns
$T_{DSPDO_PCIN_CARRYCASCOUT}$	PCIN input to CARRYCASCOUT output	1.36	1.56	1.85	1.85	1.85	2.21	ns

Table 31: **DSP48E1 Switching Characteristics *(Cont'd)***

Symbol	Description	Speed Grade						Units
		1.0V				0.95V	0.9V	
		-3	-2/-2LE	-1	-1Q/-1M	-1LI	-2LE	
Clock to Outs from Output Register Clock to Output Pins								
$T_{DSPCKO_P_PREG}$	CLK PREG to P output	0.33	0.37	0.44	0.44	0.44	0.54	ns
$T_{DSPCKO_CARRYCASCOUT_PREG}$	CLK PREG to CARRYCASCOUT output	0.52	0.59	0.69	0.69	0.69	0.84	ns
Clock to Outs from Pipeline Register Clock to Output Pins								
$T_{DSPCKO_P_MREG}$	CLK MREG to P output	1.68	1.93	2.31	2.31	2.31	2.73	ns
$T_{DSPCKO_CARRYCASCOUT_MREG}$	CLK MREG to CARRYCASCOUT output	1.92	2.21	2.64	2.64	2.64	3.12	ns
$T_{DSPCKO_P_ADREG_MULT}$	CLK ADREG to P output using multiplier	2.72	3.10	3.69	3.69	3.69	4.60	ns
$T_{DSPCKO_CARRYCASCOUT_ADREG_MULT}$	CLK ADREG to CARRYCASCOUT output using multiplier	2.96	3.38	4.02	4.02	4.02	4.99	ns
Clock to Outs from Input Register Clock to Output Pins								
$T_{DSPCKO_P_AREG_MULT}$	CLK AREG to P output using multiplier	3.94	4.51	5.37	5.37	5.37	6.84	ns
$T_{DSPCKO_P_BREG}$	CLK BREG to P output not using multiplier	1.64	1.87	2.22	2.22	2.22	2.65	ns
$T_{DSPCKO_P_CREG}$	CLK CREG to P output not using multiplier	1.69	1.93	2.30	2.30	2.30	2.81	ns
$T_{DSPCKO_P_DREG_MULT}$	CLK DREG to P output using multiplier	3.91	4.48	5.32	5.32	5.32	6.77	ns
Clock to Outs from Input Register Clock to Cascading Output Pins								
$T_{DSPCKO_\{ACOUT;\ BCOUT\}_\{AREG;\ BREG\}}$	CLK (ACOUT, BCOUT) to {A,B} register output	0.64	0.73	0.87	0.87	0.87	1.02	ns
$T_{DSPCKO_CARRYCASCOUT_\{AREG,\ BREG\}_MULT}$	CLK (AREG, BREG) to CARRYCASCOUT output using multiplier	4.19	4.79	5.70	5.70	5.70	7.24	ns
$T_{DSPCKO_CARRYCASCOUT_\ BREG}$	CLK BREG to CARRYCASCOUT output not using multiplier	1.88	2.15	2.55	2.55	2.55	3.04	ns
$T_{DSPCKO_CARRYCASCOUT_\ DREG_MULT}$	CLK DREG to CARRYCASCOUT output using multiplier	4.16	4.76	5.65	5.65	5.65	7.17	ns
$T_{DSPCKO_CARRYCASCOUT_\ CREG}$	CLK CREG to CARRYCASCOUT output	1.94	2.21	2.63	2.63	2.63	3.20	ns
Maximum Frequency								
F_{MAX}	With all registers used	628.93	550.66	464.25	464.25	464.25	363.77	MHz
F_{MAX_PATDET}	With pattern detector	531.63	465.77	392.93	392.93	392.93	310.08	MHz
$F_{MAX_MULT_NOMREG}$	Two register multiply without MREG	349.28	305.62	257.47	257.47	257.47	210.44	MHz
$F_{MAX_MULT_NOMREG_PATDET}$	Two register multiply without MREG with pattern detect	317.26	277.62	233.92	233.92	233.92	191.28	MHz
$F_{MAX_PREADD_MULT_NOADREG}$	Without ADREG	397.30	346.26	290.44	290.44	290.44	223.26	MHz
$F_{MAX_PREADD_MULT_NOADREG_PATDET}$	Without ADREG with pattern detect	397.30	346.26	290.44	290.44	290.44	223.26	MHz

Table 31: **DSP48E1 Switching Characteristics *(Cont'd)***

Symbol	Description	Speed Grade						Units
		1.0V				0.95V	0.9V	
		-3	-2/-2LE	-1	-1Q/-1M	-1LI	-2LE	
$F_{MAX_NOPIPELINEREG}$	Without pipeline registers (MREG, ADREG)	260.01	227.01	190.69	190.69	190.69	150.13	MHz
$F_{MAX_NOPIPELINEREG_PATDET}$	Without pipeline registers (MREG, ADREG) with pattern detect	241.72	211.15	177.43	177.43	177.43	140.10	MHz

Clock Buffers and Networks

Table 32: **Global Clock Switching Characteristics (Including BUFGCTRL)**

Symbol	Description	Speed Grade						Units
		1.0V				0.95V	0.9V	
		-3	-2/-2LE	-1	-1Q/-1M	-1LI	-2LE	
T_{BCCCK_CE}/ T_{BCCKC_CE}(1)	CE pins setup/hold	0.12/0.39	0.13/0.40	0.16/0.41	0.16/0.83	0.16/0.41	0.31/0.67	ns
T_{BCCCK_S}/ T_{BCCKC_S}(1)	S pins setup/hold	0.12/0.39	0.13/0.40	0.16/0.41	0.16/0.83	0.16/0.41	0.31/0.67	ns
T_{BCCKO_O}(2)	BUFGCTRL delay from I0/I1 to O	0.08	0.09	0.10	0.10	0.10	0.14	ns
Maximum Frequency								
F_{MAX_BUFG}	Global clock tree (BUFG)	628.00	628.00	464.00	464.00	464.00	394.00	MHz

Notes:

1. T_{BCCCK_CE} and T_{BCCKC_CE} must be satisfied to assure glitch-free operation of the global clock when switching between clocks. These parameters do not apply to the BUFGMUX primitive that assures glitch-free operation. The other global clock setup and hold times are optional; only needing to be satisfied if device operation requires simulation matches on a cycle-for-cycle basis when switching between clocks.
2. T_{BGCKO_O} (BUFG delay from I0 to O) values are the same as T_{BCCKO_O} values.

Table 33: **Input/Output Clock Switching Characteristics (BUFIO)**

Symbol	Description	Speed Grade						Units
		1.0V				0.95V	0.9V	
		-3	-2/-2LE	-1	-1Q/-1M	-1LI	-2LE	
T_{BIOCKO_O}	Clock to out delay from I to O	1.11	1.26	1.54	1.54	1.54	1.56	ns
Maximum Frequency								
F_{MAX_BUFIO}	I/O clock tree (BUFIO)	680.00	680.00	600.00	600.00	600.00	600.00	MHz

Table 34: **Regional Clock Buffer Switching Characteristics (BUFR)**

Symbol	Description	Speed Grade						Units
		1.0V				0.95V	0.9V	
		-3	-2/-2LE	-1	-1Q/-1M	-1LI	-2LE	
T_{BRCKO_O}	Clock to out delay from I to O	0.64	0.76	0.99	0.99	0.99	1.24	ns
$T_{BRCKO_O_BYP}$	Clock to out delay from I to O with Divide Bypass attribute set	0.34	0.39	0.52	0.52	0.52	0.72	ns
T_{BRDO_O}	Propagation delay from CLR to O	0.81	0.85	1.09	1.09	1.09	0.96	ns

Table 34: **Regional Clock Buffer Switching Characteristics (BUFR) *(Cont'd)***

Symbol	Description	Speed Grade						Units
		1.0V				0.95V	0.9V	
		-3	-2/-2LE	-1	-1Q/-1M	-1LI	-2LE	
Maximum Frequency								
F_{MAX_BUFR}[1]	Regional clock tree (BUFR)	420.00	375.00	315.00	315.00	315.00	315.00	MHz

Notes:

1. The maximum input frequency to the BUFR and BUFMR is the BUFIO F_{MAX} frequency.

Table 35: **Horizontal Clock Buffer Switching Characteristics (BUFH)**

Symbol	Description	Speed Grade						Units
		1.0V				0.95V	0.9V	
		-3	-2/-2LE	-1	-1Q/-1M	-1LI	-2LE	
T_{BHCKO_O}	BUFH delay from I to O	0.10	0.11	0.13	0.13	0.13	0.16	ns
T_{BHCCK_CE}/ T_{BHCKC_CE}	CE pin setup and hold	0.19/0.13	0.22/0.15	0.28/0.21	0.28/0.42	0.28/0.21	0.35/0.25	ns
Maximum Frequency								
F_{MAX_BUFH}	Horizontal clock buffer (BUFH)	628.00	628.00	464.00	464.00	464.00	394.00	MHz

Table 36: **Duty Cycle Distortion and Clock-Tree Skew**

Symbol	Description	Device	Speed Grade						Units
			1.0V				0.95V	0.9V	
			-3	-2/-2LE	-1	-1Q/-1M	-1LI	-2LE	
T_{DCD_CLK}	Global clock tree duty-cycle distortion[1]	All	0.20	0.20	0.20	N/A	0.20	0.25	ns
T_{CKSKEW}	Global clock tree skew[2]	XC7A12T	0.26	0.26	0.26	N/A	0.26	0.33	ns
		XC7A15T	0.26	0.26	0.26	N/A	0.26	0.33	ns
		XC7A25T	0.26	0.26	0.26	N/A	0.26	0.33	ns
		XC7A35T	0.26	0.26	0.26	N/A	0.26	0.33	ns
		XC7A50T	0.26	0.26	0.26	N/A	0.26	0.33	ns
		XC7A75T	0.27	0.33	0.36	N/A	0.36	0.48	ns
		XC7A100T	0.27	0.33	0.36	N/A	0.36	0.48	ns
		XC7A200T	0.40	0.48	0.54	N/A	0.54	0.69	ns
		XA7A12T	N/A	0.26	0.26	0.26	N/A	N/A	ns
		XA7A15T	N/A	0.26	0.26	0.26	N/A	N/A	ns
		XA7A25T	N/A	0.26	0.26	0.26	N/A	N/A	ns
		XA7A35T	N/A	0.26	0.26	0.26	N/A	N/A	ns
		XA7A50T	N/A	0.26	0.26	0.26	N/A	N/A	ns
		XA7A75T	N/A	0.33	0.36	0.36	N/A	N/A	ns
		XA7A100T	N/A	0.33	0.36	0.36	N/A	N/A	ns
		XQ7A50T	N/A	0.26	0.26	0.26	0.26	N/A	ns
		XQ7A100T	N/A	0.33	0.36	0.36	0.36	N/A	ns
		XQ7A200T	N/A	0.48	0.54	0.54	0.54	N/A	ns
T_{DCD_BUFIO}	I/O clock tree duty cycle distortion	All	0.14	0.14	0.14	0.14	0.14	0.14	ns

Table 36: **Duty Cycle Distortion and Clock-Tree Skew *(Cont'd)***

Symbol	Description	Device	Speed Grade						Units
			1.0V				0.95V	0.9V	
			-3	-2/-2LE	-1	-1Q/-1M	-1LI	-2LE	
$T_{BUFIOSKEW}$	I/O clock tree skew across one clock region	All	0.03	0.03	0.03	0.03	0.03	0.03	ns
T_{DCD_BUFR}	Regional clock tree duty cycle distortion	All	0.18	0.18	0.18	0.18	0.18	0.18	ns

Notes:

1. These parameters represent the worst-case duty cycle distortion observable at the I/O flip flops. For all I/O standards, IBIS can be used to calculate any additional duty cycle distortion that might be caused by asymmetrical rise/fall times.
2. The T_{CKSKEW} value represents the worst-case clock-tree skew observable between sequential I/O elements. Significantly less clock-tree skew exists for I/O registers that are close to each other and fed by the same or adjacent clock-tree branches. Use the Xilinx Timing Analyzer tools to evaluate clock skew specific to your application.

MMCM Switching Characteristics

Table 37: **MMCM Specification**

Symbol	Description	Speed Grade					Units
		1.0V			0.95V	0.9V	
		-3	-2/-2LE	-1	-1LI	-2LE	
$MMCM_F_{INMAX}$	Maximum input clock frequency	800.00	800.00	800.00	800.00	800.00	MHz
$MMCM_F_{INMIN}$	Minimum input clock frequency	10.00	10.00	10.00	10.00	10.00	MHz
$MMCM_F_{INJITTER}$	Maximum input clock period jitter	< 20% of clock input period or 1 ns Max					
$MMCM_F_{INDUTY}$	Allowable input duty cycle: 10—49 MHz	25	25	25	25	25	%
	Allowable input duty cycle: 50—199 MHz	30	30	30	30	30	%
	Allowable input duty cycle: 200—399 MHz	35	35	35	35	35	%
	Allowable input duty cycle: 400—499 MHz	40	40	40	40	40	%
	Allowable input duty cycle: > 500 MHz	45	45	45	45	45	%
$MMCM_F_{MIN_PSCLK}$	Minimum dynamic phase-shift clock frequency	0.01	0.01	0.01	0.01	0.01	MHz
$MMCM_F_{MAX_PSCLK}$	Maximum dynamic phase-shift clock frequency	550.00	500.00	450.00	450.00	450.00	MHz
$MMCM_F_{VCOMIN}$	Minimum MMCM VCO frequency	600.00	600.00	600.00	600.00	600.00	MHz
$MMCM_F_{VCOMAX}$	Maximum MMCM VCO frequency	1600.00	1440.00	1200.00	1200.00	1200.00	MHz
$MMCM_F_{BANDWIDTH}$	Low MMCM bandwidth at typical(1)	1.00	1.00	1.00	1.00	1.00	MHz
	High MMCM bandwidth at typical(1)	4.00	4.00	4.00	4.00	4.00	MHz
$MMCM_T_{STATPHAOFFSET}$	Static phase offset of the MMCM outputs(2)	0.12	0.12	0.12	0.12	0.12	ns
$MMCM_T_{OUTJITTER}$	MMCM output jitter	Note 3					
$MMCM_T_{OUTDUTY}$	MMCM output clock duty-cycle precision(4)	0.20	0.20	0.20	0.20	0.25	ns
$MMCM_T_{LOCKMAX}$	MMCM maximum lock time	100.00	100.00	100.00	100.00	100.00	µs
$MMCM_F_{OUTMAX}$	MMCM maximum output frequency	800.00	800.00	800.00	800.00	800.00	MHz
$MMCM_F_{OUTMIN}$	MMCM minimum output frequency(5)(6)	4.69	4.69	4.69	4.69	4.69	MHz

Table 37: **MMCM Specification *(Cont'd)***

Symbol	Description	Speed Grade					Units
		1.0V			0.95V	0.9V	
		-3	-2/-2LE	-1	-1LI	-2LE	
MMCM_$T_{EXTFDVAR}$	External clock feedback variation	< 20% of clock input period or 1 ns Max					
MMCM_$RST_{MINPULSE}$	Minimum reset pulse width	5.00	5.00	5.00	5.00	5.00	ns
MMCM_F_{PFDMAX}	Maximum frequency at the phase frequency detector	550.00	500.00	450.00	450.00	450.00	MHz
MMCM_F_{PFDMIN}	Minimum frequency at the phase frequency detector	10.00	10.00	10.00	10.00	10.00	MHz
MMCM_$T_{FBDELAY}$	Maximum delay in the feedback path	3 ns Max or one CLKIN cycle					
MMCM Switching Characteristics Setup and Hold							
$T_{MMCMDCK_PSEN}$/ $T_{MMCMCKD_PSEN}$	Setup and hold of phase-shift enable	1.04/0.00	1.04/0.00	1.04/0.00	1.04/0.00	1.04/0.00	ns
$T_{MMCMDCK_PSINCDEC}$/ $T_{MMCMCKD_PSINCDEC}$	Setup and hold of phase-shift increment/decrement	1.04/0.00	1.04/0.00	1.04/0.00	1.04/0.00	1.04/0.00	ns
$T_{MMCMCKO_PSDONE}$	Phase shift clock-to-out of PSDONE	0.59	0.68	0.81	0.81	0.78	ns
Dynamic Reconfiguration Port (DRP) for MMCM Before and After DCLK							
$T_{MMCMDCK_DADDR}$/ $T_{MMCMCKD_DADDR}$	DADDR setup/hold	1.25/0.15	1.40/0.15	1.63/0.15	1.63/0.15	1.43/0.00	ns, Min
$T_{MMCMDCK_DI}$/ $T_{MMCMCKD_DI}$	DI setup/hold	1.25/0.15	1.40/0.15	1.63/0.15	1.63/0.15	1.43/0.00	ns, Min
$T_{MMCMDCK_DEN}$/ $T_{MMCMCKD_DEN}$	DEN setup/hold	1.76/0.00	1.97/0.00	2.29/0.00	2.29/0.00	2.40/0.00	ns, Min
$T_{MMCMDCK_DWE}$/ $T_{MMCMCKD_DWE}$	DWE setup/hold	1.25/0.15	1.40/0.15	1.63/0.15	1.63/0.15	1.43/0.00	ns, Min
$T_{MMCMCKO_DRDY}$	CLK to out of DRDY	0.65	0.72	0.99	0.99	0.99	ns, Max
F_{DCK}	DCLK frequency	200.00	200.00	200.00	200.00	100.00	MHz, Max

Notes:

1. The MMCM does not filter typical spread-spectrum input clocks because they are usually far below the bandwidth filter frequencies.
2. The static offset is measured between any MMCM outputs with identical phase.
3. Values for this parameter are available in the Clocking Wizard. See http://www.xilinx.com/products/intellectual-property/clocking_wizard.htm.
4. Includes global clock buffer.
5. Calculated as F_{VCO}/128 assuming output duty cycle is 50%.
6. When CLKOUT4_CASCADE = TRUE, MMCM_F_{OUTMIN} is 0.036 MHz.

PLL Switching Characteristics

Table 38: **PLL Specification**

Symbol	Description	Speed Grade					Units
		1.0V			0.95V	0.9V	
		-3	-2/-2LE	-1	-1LI	-2LE	
PLL_F_{INMAX}	Maximum input clock frequency	800.00	800.00	800.00	800.00	800.00	MHz
PLL_F_{INMIN}	Minimum input clock frequency	19.00	19.00	19.00	19.00	19.00	MHz
PLL_$F_{INJITTER}$	Maximum input clock period jitter	< 20% of clock input period or 1 ns Max					
PLL_F_{INDUTY}	Allowable input duty cycle: 19—49 MHz	25	25	25	25	25	%
	Allowable input duty cycle: 50—199 MHz	30	30	30	30	30	%
	Allowable input duty cycle: 200—399 MHz	35	35	35	35	35	%
	Allowable input duty cycle: 400—499 MHz	40	40	40	40	40	%
	Allowable input duty cycle: >500 MHz	45	45	45	45	45	%
PLL_F_{VCOMIN}	Minimum PLL VCO frequency	800.00	800.00	800.00	800.00	800.00	MHz
PLL_F_{VCOMAX}	Maximum PLL VCO frequency	2133.00	1866.00	1600.00	1600.00	1600.00	MHz
PLL_$F_{BANDWIDTH}$	Low PLL bandwidth at typical(1)	1.00	1.00	1.00	1.00	1.00	MHz
	High PLL bandwidth at typical(1)	4.00	4.00	4.00	4.00	4.00	MHz
PLL_$T_{STATPHAOFFSET}$	Static phase offset of the PLL outputs(2)	0.12	0.12	0.12	0.12	0.12	ns
PLL_$T_{OUTJITTER}$	PLL output jitter	Note 3					
PLL_$T_{OUTDUTY}$	PLL output clock duty-cycle precision(4)	0.20	0.20	0.20	0.20	0.25	ns
PLL_$T_{LOCKMAX}$	PLL maximum lock time	100.00	100.00	100.00	100.00	100.00	µs
PLL_F_{OUTMAX}	PLL maximum output frequency	800.00	800.00	800.00	800.00	800.00	MHz
PLL_F_{OUTMIN}	PLL minimum output frequency(5)	6.25	6.25	6.25	6.25	6.25	MHz
PLL_$T_{EXTFDVAR}$	External clock feedback variation	< 20% of clock input period or 1 ns Max					
PLL_$RST_{MINPULSE}$	Minimum reset pulse width	5.00	5.00	5.00	5.00	5.00	ns
PLL_F_{PFDMAX}	Maximum frequency at the phase frequency detector	550.00	500.00	450.00	450.00	450.00	MHz
PLL_F_{PFDMIN}	Minimum frequency at the phase frequency detector	19.00	19.00	19.00	19.00	19.00	MHz
PLL_$T_{FBDELAY}$	Maximum delay in the feedback path	3 ns Max or one CLKIN cycle					
Dynamic Reconfiguration Port (DRP) for PLL Before and After DCLK							
T_{PLLDCK_DADDR}/ T_{PLLCKD_DADDR}	Setup and hold of D address	1.25/0.15	1.40/0.15	1.63/0.15	1.63/0.15	1.43/0.00	ns, Min
T_{PLLDCK_DI}/ T_{PLLCKD_DI}	Setup and hold of D input	1.25/0.15	1.40/0.15	1.63/0.15	1.63/0.15	1.43/0.00	ns, Min
T_{PLLDCK_DEN}/ T_{PLLCKD_DEN}	Setup and hold of D enable	1.76/0.00	1.97/0.00	2.29/0.00	2.29/0.00	2.40/0.00	ns, Min
T_{PLLDCK_DWE}/ T_{PLLCKD_DWE}	Setup and hold of D write enable	1.25/0.15	1.40/0.15	1.63/0.15	1.63/0.15	1.43/0.00	ns, Min
T_{PLLCKO_DRDY}	CLK to out of DRDY	0.65	0.72	0.99	0.99	0.99	ns, Max

Table 38: **PLL Specification *(Cont'd)***

Symbol	Description	Speed Grade					Units
		1.0V			0.95V	0.9V	
		-3	-2/-2LE	-1	-1LI	-2LE	
F_{DCK}	DCLK frequency	200.00	200.00	200.00	200.00	100.00	MHz, Max

Notes:

1. The PLL does not filter typical spread-spectrum input clocks because they are usually far below the bandwidth filter frequencies.
2. The static offset is measured between any PLL outputs with identical phase.
3. Values for this parameter are available in the Clocking Wizard. See http://www.xilinx.com/products/intellectual-property/clocking_wizard.htm.
4. Includes global clock buffer.
5. Calculated as $F_{VCO}/128$ assuming output duty cycle is 50%.

Device Pin-to-Pin Output Parameter Guidelines

Table 39: **Clock-Capable Clock Input to Output Delay Without MMCM/PLL (Near Clock Region)(1)**

Symbol	Description	Device	Speed Grade						Units
			1.0V				0.95V	0.9V	
			-3	-2/-2LE	-1	-1M/-1Q	-1LI	-2LE	
SSTL15 Clock-Capable Clock Input to Output Delay using Output Flip-Flop, Fast Slew Rate, *without* MMCM/PLL.									
T_{ICKOF}	Clock-capable clock input and OUTFF at pins/banks closest to the BUFGs *without* MMCM/PLL (near clock region)(2)	XC7A12T	4.97	5.55	6.44	N/A	6.44	7.38	ns
		XC7A15T	5.10	5.70	6.61	N/A	6.61	7.56	ns
		XC7A25T	4.97	5.55	6.44	N/A	6.44	7.38	ns
		XC7A35T	5.10	5.70	6.61	N/A	6.61	7.56	ns
		XC7A50T	5.10	5.70	6.61	N/A	6.61	7.56	ns
		XC7A75T	5.14	5.74	6.72	N/A	6.72	7.62	ns
		XC7A100T	5.14	5.74	6.72	N/A	6.72	7.62	ns
		XC7A200T	5.47	6.11	7.16	N/A	7.16	8.08	ns
		XA7A12T	N/A	5.55	6.44	6.44	N/A	N/A	ns
		XA7A15T	N/A	5.70	6.61	6.61	N/A	N/A	ns
		XA7A25T	N/A	5.55	6.44	6.44	N/A	N/A	ns
		XA7A35T	N/A	5.70	6.61	6.61	N/A	N/A	ns
		XA7A50T	N/A	5.70	6.61	6.61	N/A	N/A	ns
		XA7A75T	N/A	5.74	6.72	6.72	N/A	N/A	ns
		XA7A100T	N/A	5.74	6.72	6.72	N/A	N/A	ns
		XQ7A50T	N/A	5.70	6.61	6.61	6.61	N/A	ns
		XQ7A100T	N/A	5.74	6.72	6.72	6.72	N/A	ns
		XQ7A200T	N/A	6.11	7.16	7.16	7.16	N/A	ns

Notes:

1. Listed above are representative values where one global clock input drives one vertical clock line in each accessible column, and where all accessible IOB and CLB flip-flops are clocked by the global clock net.
2. Refer to the Die Level Bank Numbering Overview section of *7 Series FPGA Packaging and Pinout Specification* (UG475).

Table 40: **Clock-Capable Clock Input to Output Delay Without MMCM/PLL (Far Clock Region)[1]**

Symbol	Description	Device	Speed Grade						Units
			1.0V				0.95V	0.9V	
			-3	-2/-2LE	-1	-1M/-1Q	-1LI	-2LE	
SSTL15 Clock-Capable Clock Input to Output Delay using Output Flip-Flop, Fast Slew Rate, *without* MMCM/PLL.									
$T_{ICKOFFAR}$	Clock-capable clock input and OUTFF at pins/banks farthest from the BUFGs *without* MMCM/PLL (far clock region)[2]	XC7A12T	4.97	5.55	6.44	N/A	6.44	7.38	ns
		XC7A15T	5.10	5.70	6.61	N/A	6.61	7.57	ns
		XC7A25T	4.97	5.55	6.44	N/A	6.44	7.38	ns
		XC7A35T	5.10	5.70	6.61	N/A	6.61	7.57	ns
		XC7A50T	5.10	5.70	6.61	N/A	6.61	7.57	ns
		XC7A75T	5.38	6.01	7.02	N/A	7.02	7.94	ns
		XC7A100T	5.38	6.01	7.02	N/A	7.02	7.94	ns
		XC7A200T	6.17	6.89	8.05	N/A	8.05	9.03	ns
		XA7A12T	N/A	5.55	6.44	6.44	N/A	N/A	ns
		XA7A15T	N/A	5.70	6.61	6.61	N/A	N/A	ns
		XA7A25T	N/A	5.55	6.44	6.44	N/A	N/A	ns
		XA7A35T	N/A	5.70	6.61	6.61	N/A	N/A	ns
		XA7A50T	N/A	5.70	6.61	6.61	N/A	N/A	ns
		XA7A75T	N/A	6.01	7.02	7.02	N/A	N/A	ns
		XA7A100T	N/A	6.01	7.02	7.02	N/A	N/A	ns
		XQ7A50T	N/A	5.70	6.61	6.61	6.61	N/A	ns
		XQ7A100T	N/A	6.01	7.02	7.02	7.02	N/A	ns
		XQ7A200T	N/A	6.89	8.05	8.05	8.05	N/A	ns

Notes:

1. Listed above are representative values where one global clock input drives one vertical clock line in each accessible column, and where all accessible IOB and CLB flip-flops are clocked by the global clock net.
2. Refer to the Die Level Bank Numbering Overview section of *7 Series FPGA Packaging and Pinout Specification* (UG475).

Table 41: **Clock-Capable Clock Input to Output Delay With MMCM**

Symbol	Description	Device	Speed Grade						Units
			1.0V				0.95V	0.9V	
			-3	-2/-2LE	-1	-1M/-1Q	-1LI	-2LE	
SSTL15 Clock-Capable Clock Input to Output Delay using Output Flip-Flop, Fast Slew Rate, *with* MMCM.									
$T_{ICKOFMMCMCC}$	Clock-capable clock input and OUTFF *with* MMCM	XC7A12T	1.00	1.00	1.00	N/A	1.00	1.78	ns
		XC7A15T	1.00	1.00	1.00	N/A	1.00	1.78	ns
		XC7A25T	1.00	1.00	1.00	N/A	1.00	1.78	ns
		XC7A35T	1.00	1.00	1.00	N/A	1.00	1.78	ns
		XC7A50T	1.00	1.00	1.00	N/A	1.00	1.78	ns
		XC7A75T	1.00	1.00	1.00	N/A	1.00	1.79	ns
		XC7A100T	1.00	1.00	1.00	N/A	1.00	1.79	ns
		XC7A200T	1.01	1.02	1.04	N/A	1.04	1.84	ns
		XA7A12T	N/A	1.00	1.00	1.00	N/A	N/A	ns
		XA7A15T	N/A	1.00	1.00	1.00	N/A	N/A	ns
		XA7A25T	N/A	1.00	1.00	1.00	N/A	N/A	ns
		XA7A35T	N/A	1.00	1.00	1.00	N/A	N/A	ns
		XA7A50T	N/A	1.00	1.00	1.00	N/A	N/A	ns
		XA7A75T	N/A	1.00	1.00	1.00	N/A	N/A	ns
		XA7A100T	N/A	1.00	1.00	1.00	N/A	N/A	ns
		XQ7A50T	N/A	1.00	1.00	1.00	1.00	N/A	ns
		XQ7A100T	N/A	1.00	1.00	1.00	1.00	N/A	ns
		XQ7A200T	N/A	1.02	1.04	1.04	1.04	N/A	ns

Notes:

1. Listed above are representative values where one global clock input drives one vertical clock line in each accessible column, and where all accessible IOB and CLB flip-flops are clocked by the global clock net.
2. MMCM output jitter is already included in the timing calculation.

Table 42: **Clock-Capable Clock Input to Output Delay With PLL**

Symbol	Description	Device	Speed Grade						Units
			1.0V				0.95V	0.9V	
			-3	-2/-2LE	-1	-1M/-1Q	-1LI	-2LE	
SSTL15 Clock-Capable Clock Input to Output Delay using Output Flip-Flop, Fast Slew Rate, *with* PLL.									
$T_{ICKOFPLLCC}$	Clock-capable clock input and OUTFF *with* PLL	XC7A12T	0.83	0.83	0.83	N/A	0.83	1.38	ns
		XC7A15T	0.82	0.82	0.82	N/A	0.82	1.39	ns
		XC7A25T	0.83	0.83	0.83	N/A	0.83	1.38	ns
		XC7A35T	0.82	0.82	0.82	N/A	0.82	1.39	ns
		XC7A50T	0.82	0.82	0.82	N/A	0.82	1.39	ns
		XC7A75T	0.82	0.82	0.82	N/A	0.82	1.40	ns
		XC7A100T	0.82	0.82	0.82	N/A	0.82	1.40	ns
		XC7A200T	0.81	0.81	0.81	N/A	0.81	1.45	ns
		XA7A12T	N/A	0.83	0.83	0.83	N/A	N/A	ns
		XA7A15T	N/A	0.82	0.82	0.82	N/A	N/A	ns
		XA7A25T	N/A	0.83	0.83	0.83	N/A	N/A	ns
		XA7A35T	N/A	0.82	0.82	0.82	N/A	N/A	ns
		XA7A50T	N/A	0.82	0.82	0.82	N/A	N/A	ns
		XA7A75T	N/A	0.82	0.82	0.82	N/A	N/A	ns
		XA7A100T	N/A	0.82	0.82	0.82	N/A	N/A	ns
		XQ7A50T	N/A	0.82	0.82	0.82	0.82	N/A	ns
		XQ7A100T	N/A	0.82	0.82	0.82	0.82	N/A	ns
		XQ7A200T	N/A	0.81	0.81	0.81	0.81	N/A	ns

Notes:

1. Listed above are representative values where one global clock input drives one vertical clock line in each accessible column, and where all accessible IOB and CLB flip-flops are clocked by the global clock net.
2. PLL output jitter is already included in the timing calculation.

Table 43: **Pin-to-Pin, Clock-to-Out using BUFIO**

Symbol	Description	Speed Grade						Units
		1.0V				0.95V	0.9V	
		-3	-2/-2LE	-1	-1M/-1Q	-1LI	-2LE	
SSTL15 Clock-Capable Clock Input to Output Delay using Output Flip-Flop, Fast Slew Rate, with BUFIO.								
$T_{ICKOFCS}$	Clock to out of I/O clock	5.01	5.61	6.64	6.64	6.64	7.32	ns

Device Pin-to-Pin Input Parameter Guidelines

All devices are 100% functionally tested. Values are expressed in nanoseconds unless otherwise noted.

Table 44: **Global Clock Input Setup and Hold Without MMCM/PLL with ZHOLD_DELAY on HR I/O Banks**

Symbol	Description	Device	Speed Grade						Units
			1.0V				0.95V	0.9V	
			-3	-2/-2LE	-1	-1M/-1Q	-1LI	-2LE	
Input Setup and Hold Time Relative to Global Clock Input Signal for SSTL15 Standard.(1)									
T_{PSFD}/ T_{PHFD}	Full delay (legacy delay or default delay) global clock input and IFF(2) without MMCM/PLL with ZHOLD_DELAY on HR I/O banks	XC7A12T	2.49/–0.37	2.67/–0.37	3.12/–0.37	N/A	3.12/–0.37	5.13/–0.54	ns
		XC7A15T	2.47/–0.29	2.65/–0.29	3.10/–0.29	N/A	3.10/–0.29	5.10/–0.44	ns
		XC7A25T	2.49/–0.37	2.67/–0.37	3.12/–0.37	N/A	3.12/–0.37	5.13/–0.54	ns
		XC7A35T	2.47/–0.29	2.65/–0.29	3.10/–0.29	N/A	3.10/–0.29	5.10/–0.44	ns
		XC7A50T	2.47/–0.29	2.65/–0.29	3.10/–0.29	N/A	3.10/–0.29	5.10/–0.44	ns
		XC7A75T	2.69/–0.34	2.89/–0.34	3.34/–0.34	N/A	3.34/–0.34	5.66/–0.51	ns
		XC7A100T	2.69/–0.34	2.89/–0.34	3.34/–0.34	N/A	3.34/–0.34	5.66/–0.51	ns
		XC7A200T	3.03/–0.36	3.27/–0.36	3.79/–0.36	N/A	3.79/–0.36	6.66/–0.55	ns
		XA7A12T	N/A	2.67/–0.37	3.12/–0.37	3.12/–0.37	N/A	N/A	ns
		XA7A15T	N/A	2.65/–0.29	3.10/–0.29	3.10/–0.29	N/A	N/A	ns
		XA7A25T	N/A	2.67/–0.37	3.12/–0.37	3.12/–0.37	N/A	N/A	ns
		XA7A35T	N/A	2.65/–0.29	3.10/–0.29	3.10/–0.29	N/A	N/A	ns
		XA7A50T	N/A	2.65/–0.29	3.10/–0.29	3.10/–0.29	N/A	N/A	ns
		XA7A75T	N/A	2.89/–0.34	3.34/–0.34	3.34/–0.34	N/A	N/A	ns
		XA7A100T	N/A	2.89/–0.34	3.34/–0.34	3.34/–0.34	N/A	N/A	ns
		XQ7A50T	N/A	2.65/–0.29	3.10/–0.29	3.10/–0.29	3.10/–0.29	N/A	ns
		XQ7A100T	N/A	2.89/–0.34	3.34/–0.34	3.34/–0.34	3.34/–0.34	N/A	ns
		XQ7A200T	N/A	3.27/–0.36	3.79/–0.36	3.79/–0.36	3.79/–0.36	N/A	ns

Notes:

1. Setup and hold times are measured over worst case conditions (process, voltage, temperature). Setup time is measured relative to the global clock input signal using the slowest process, highest temperature, and lowest voltage. Hold time is measured relative to the global clock input signal using the fastest process, lowest temperature, and highest voltage.
2. IFF = Input flip-flop or latch.

Table 45: **Clock-Capable Clock Input Setup and Hold With MMCM**

Symbol	Description	Device	Speed Grade						Units
			1.0V				0.95V	0.9V	
			-3	-2/-2LE	-1	-1M/-1Q	-1LI	-2LE	
Input Setup and Hold Time Relative to Global Clock Input Signal for SSTL15 Standard.(1)									
$T_{PSMMCMCC}$/ $T_{PHMMCMCC}$	No delay clock-capable clock input and IFF(2) with MMCM	XC7A12T	2.37/–0.61	2.69/–0.61	3.21/–0.61	N/A	3.21/–0.61	2.00/–0.47	ns
		XC7A15T	2.46/–0.62	2.80/–0.62	3.35/–0.62	N/A	3.35/–0.62	2.14/–0.48	ns
		XC7A25T	2.37/–0.61	2.69/–0.61	3.21/–0.61	N/A	3.21/–0.61	2.00/–0.47	ns
		XC7A35T	2.46/–0.62	2.80/–0.62	3.35/–0.62	N/A	3.35/–0.62	2.14/–0.48	ns
		XC7A50T	2.46/–0.62	2.80/–0.62	3.35/–0.62	N/A	3.35/–0.62	2.14/–0.48	ns
		XC7A75T	2.47/–0.62	2.81/–0.62	3.36/–0.62	N/A	3.36/–0.62	2.15/–0.48	ns
		XC7A100T	2.47/–0.62	2.81/–0.62	3.36/–0.62	N/A	3.36/–0.62	2.15/–0.48	ns
		XC7A200T	2.59/–0.63	2.95/–0.63	3.52/–0.63	N/A	3.52/–0.63	2.32/–0.51	ns
		XA7A12T	N/A	2.69/–0.61	3.21/–0.61	3.21/–0.61	N/A	N/A	ns
		XA7A15T	N/A	2.80/–0.62	3.35/–0.62	3.35/–0.62	N/A	N/A	ns
		XA7A25T	N/A	2.69/–0.61	3.21/–0.61	3.21/–0.61	N/A	N/A	ns
		XA7A35T	N/A	2.80/–0.62	3.35/–0.62	3.35/–0.62	N/A	N/A	ns
		XA7A50T	N/A	2.80/–0.62	3.35/–0.62	3.35/–0.62	N/A	N/A	ns
		XA7A75T	N/A	2.81/–0.62	3.36/–0.62	3.36/–0.62	N/A	N/A	ns
		XA7A100T	N/A	2.81/–0.62	3.36/–0.62	3.36/–0.62	N/A	N/A	ns
		XQ7A50T	N/A	2.80/–0.62	3.35/–0.62	3.35/–0.62	3.35/–0.62	N/A	ns
		XQ7A100T	N/A	2.81/–0.62	3.36/–0.62	3.36/–0.62	3.36/–0.62	N/A	ns
		XQ7A200T	N/A	2.95/–0.63	3.52/–0.63	3.52/–0.63	3.52/–0.63	N/A	ns

Notes:

1. Setup and hold times are measured over worst case conditions (process, voltage, temperature). Setup time is measured relative to the global clock input signal using the slowest process, highest temperature, and lowest voltage. Hold time is measured relative to the global clock input signal using the fastest process, lowest temperature, and highest voltage.
2. IFF = Input flip-flop or latch
3. Use IBIS to determine any duty-cycle distortion incurred using various standards.

Table 46: **Clock-Capable Clock Input Setup and Hold With PLL**

Symbol	Description	Device	Speed Grade						Units
			1.0V				0.95V	0.9V	
			-3	-2/-2LE	-1	-1M/-1Q	-1LI	-2LE	
Input Setup and Hold Time Relative to Clock-Capable Clock Input Signal for SSTL15 Standard.(1)									
$T_{PSPLLCC}$/ $T_{PHPLLCC}$	No delay clock-capable clock input and IFF(2) with PLL	XC7A12T	2.68/–0.19	3.04/–0.19	3.64/–0.19	N/A	3.64/–0.19	2.32/–0.57	ns
		XC7A15T	2.77/–0.20	3.15/–0.20	3.77/–0.20	N/A	3.77/–0.20	2.46/–0.59	ns
		XC7A25T	2.68/–0.19	3.04/–0.19	3.64/–0.19	N/A	3.64/–0.19	2.32/–0.57	ns
		XC7A35T	2.77/–0.20	3.15/–0.20	3.77/–0.20	N/A	3.77/–0.20	2.46/–0.59	ns
		XC7A50T	2.77/–0.20	3.15/–0.20	3.77/–0.20	N/A	3.77/–0.20	2.46/–0.59	ns
		XC7A75T	2.78/–0.20	3.15/–0.20	3.78/–0.20	N/A	3.78/–0.20	2.47/–0.59	ns
		XC7A100T	2.78/–0.20	3.15/–0.20	3.78/–0.20	N/A	3.78/–0.20	2.47/–0.59	ns
		XC7A200T	2.91/–0.21	3.29/–0.21	3.94/–0.21	N/A	3.94/–0.21	2.64/–0.62	ns
		XA7A12T	N/A	3.04/–0.19	3.64/–0.19	3.64/–0.19	N/A	N/A	ns
		XA7A15T	N/A	3.15/–0.20	3.77/–0.20	3.77/–0.20	N/A	N/A	ns
		XA7A25T	N/A	3.04/–0.19	3.64/–0.19	3.64/–0.19	N/A	N/A	ns
		XA7A35T	N/A	3.15/–0.20	3.77/–0.20	3.77/–0.20	N/A	N/A	ns
		XA7A50T	N/A	3.15/–0.20	3.77/–0.20	3.77/–0.20	N/A	N/A	ns
		XA7A75T	N/A	3.15/–0.20	3.78/–0.20	3.78/–0.20	N/A	N/A	ns
		XA7A100T	N/A	3.15/–0.20	3.78/–0.20	3.78/–0.20	N/A	N/A	ns
		XQ7A50T	N/A	3.15/–0.20	3.77/–0.20	3.77/–0.20	3.77/–0.20	N/A	ns
		XQ7A100T	N/A	3.15/–0.20	3.78/–0.20	3.78/–0.20	3.78/–0.20	N/A	ns
		XQ7A200T	N/A	3.29/–0.21	3.94/–0.21	3.94/–0.21	3.94/–0.21	N/A	ns

Notes:

1. Setup and hold times are measured over worst case conditions (process, voltage, temperature). Setup time is measured relative to the global clock input signal using the slowest process, highest temperature, and lowest voltage. Hold time is measured relative to the global clock input signal using the fastest process, lowest temperature, and highest voltage.
2. IFF = Input flip-flop or latch
3. Use IBIS to determine any duty-cycle distortion incurred using various standards.

Table 47: **Data Input Setup and Hold Times Relative to a Forwarded Clock Input Pin Using BUFIO**

Symbol	Description	Speed Grade						Units
		1.0V				0.95V	0.9V	
		-3	-2/-2LE	-1	-1M/-1Q	-1LI	-2LE	
Input Setup and Hold Time Relative to a Forwarded Clock Input Pin Using BUFIO for SSTL15 Standard.								
T_{PSCS}/T_{PHCS}	Setup and hold of I/O clock	–0.38/1.31	–0.38/1.46	–0.38/1.76	–0.38/1.76	–0.38/1.76	–0.16/1.89	ns

Table 48: **Sample Window**

Symbol	Description	Speed Grade						Units
		1.0V				0.95V	0.9V	
		-3	-2/-2LE	-1	-1M/-1Q	-1LI	-2LE	
T_{SAMP}	Sampling error at receiver pins(1)	0.59	0.64	0.70	0.70	0.70	0.70	ns

Table 48: **Sample Window *(Cont'd)***

Symbol	Description	Speed Grade						Units
		1.0V				0.95V	0.9V	
		-3	-2/-2LE	-1	-1M/-1Q	-1LI	-2LE	
T_{SAMP_BUFIO}	Sampling error at receiver pins using BUFIO(2)	0.35	0.40	0.46	0.46	0.46	0.46	ns

Notes:

1. This parameter indicates the total sampling error of the Artix-7 FPGAs DDR input registers, measured across voltage, temperature, and process. The characterization methodology uses the MMCM to capture the DDR input registers' edges of operation. These measurements include:
   - CLK0 MMCM jitter
   - MMCM accuracy (phase offset)
   - MMCM phase shift resolution

   These measurements do not include package or clock tree skew.
2. This parameter indicates the total sampling error of the Artix-7 FPGAs DDR input registers, measured across voltage, temperature, and process. The characterization methodology uses the BUFIO clock network and IDELAY to capture the DDR input registers' edges of operation. These measurements do not include package or clock tree skew.

Additional Package Parameter Guidelines

The parameters in this section provide the necessary values for calculating timing budgets for Artix-7 FPGA clock transmitter and receiver data-valid windows.

Table 49: **Package Skew**

Symbol	Description	Device	Package	Value	Units
$T_{PKGSKEW}$	Package skew(1)	XC7A12T	CPG238	55	ps
			CSG325	76	ps
		XC7A15T	CPG236	48	ps
			CSG324	104	ps
			CSG325	142	ps
			FTG256	98	ps
			FGG484	97	ps
		XC7A25T	CPG238	55	ps
			CSG325	76	ps
		XC7A35T	CPG236	48	ps
			CSG324	104	ps
			CSG325	142	ps
			FTG256	98	ps
			FGG484	97	ps
		XC7A50T	CPG236	48	ps
			CSG324	104	ps
			CSG325	142	ps
			FTG256	98	ps
			FGG484	97	ps
		XC7A75T	CSG324	113	ps
			FTG256	120	ps
			FGG484	144	ps
			FGG676	153	ps

Table 49: **Package Skew *(Cont'd)***

Symbol	Description	Device	Package	Value	Units
$T_{PKGSKEW}$	Package skew(1)	XC7A100T	CSG324	113	ps
			FTG256	120	ps
			FGG484	144	ps
			FGG676	153	ps
		XC7A200T	SBG484	111	ps
			FBG484	109	ps
			FBG676	121	ps
			FFG1156	151	ps
		XA7A12T	CSG325	76	ps
			CPG238	55	ps
		XA7A15T	CPG236	48	ps
			CSG324	104	ps
			CSG325	142	ps
		XA7A25T	CSG325	76	ps
			CPG238	55	ps
		XA7A35T	CPG236	48	ps
			CSG324	104	ps
			CSG325	142	ps
		XA7A50T	CPG236	48	ps
			CSG324	104	ps
			CSG325	142	ps
		XA7A75T	CSG324	113	ps
			FGG484	144	ps
		XA7A100T	CSG324	113	ps
			FGG484	144	ps
		XQ7A50T	CS325	142	ps
			FG484	97	ps
		XQ7A100T	CS324	113	ps
			FG484	144	ps
		XQ7A200T	RS484	111	ps
			RB484	109	ps
			RB676	121	ps

Notes:

1. These values represent the worst-case skew between any two SelectIO resources in the package: shortest delay to longest delay from die pad to ball.
2. Package delay information is available for these device/package combinations. This information can be used to deskew the package.

GTP Transceiver Specifications

GTP Transceiver DC Input and Output Levels

Table 50 summarizes the DC output specifications of the GTP transceivers in Artix-7 FPGAs. Consult *7 Series FPGAs GTP Transceiver User Guide* (UG482) for further details.

Table 50: **GTP Transceiver DC Specifications**

Symbol	DC Parameter	Conditions	Min	Typ	Max	Units
DV_{PPOUT}	Differential peak-to-peak output voltage(1)	Transmitter output swing is set to maximum setting	1000	–	–	mV
$V_{CMOUTDC}$	DC common mode output voltage	Equation based	$V_{MGTAVTT} - DV_{PPOUT}/4$			mV
R_{OUT}	Differential output resistance		–	100	–	Ω
$V_{CMOUTAC}$	Common mode output voltage: AC coupled		1/2 $V_{MGTAVTT}$			mV
T_{OSKEW}	Transmitter output pair (TXP and TXN) intra-pair skew (FF, FB, SB packages)		–	–	10	ps
	Transmitter output pair (TXP and TXN) intra-pair skew (FG, FT, CS, CP packages)		–	–	12	ps
DV_{PPIN}	Differential peak-to-peak input voltage	External AC coupled	150	–	2000	mV
V_{IN}	Single-ended input voltage(2)	DC coupled $V_{MGTAVTT}$ = 1.2V	–200	–	$V_{MGTAVTT}$	mV
V_{CMIN}	Common mode input voltage	DC coupled $V_{MGTAVTT}$ = 1.2V	–	2/3 $V_{MGTAVTT}$	–	mV
R_{IN}	Differential input resistance		–	100	–	Ω
C_{EXT}	Recommended external AC coupling capacitor(3)		–	100	–	nF

Notes:

1. The output swing and preemphasis levels are programmable using the attributes discussed in *7 Series FPGAs GTP Transceiver User Guide* (UG482) and can result in values lower than reported in this table.
2. Voltage measured at the pin referenced to ground.
3. Other values can be used as appropriate to conform to specific protocols and standards.

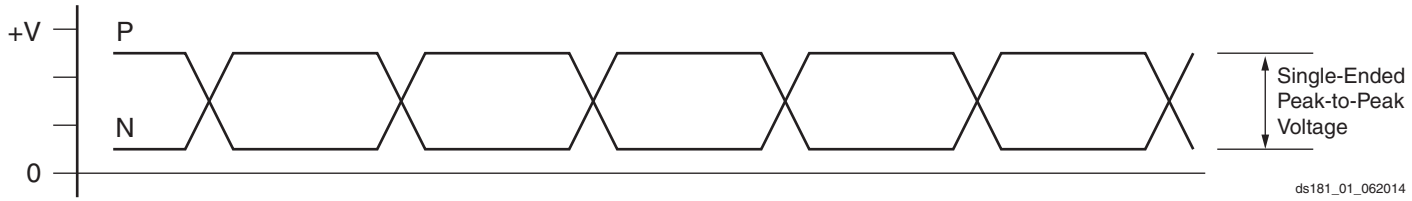

Figure 3: **Single-Ended Peak-to-Peak Voltage**

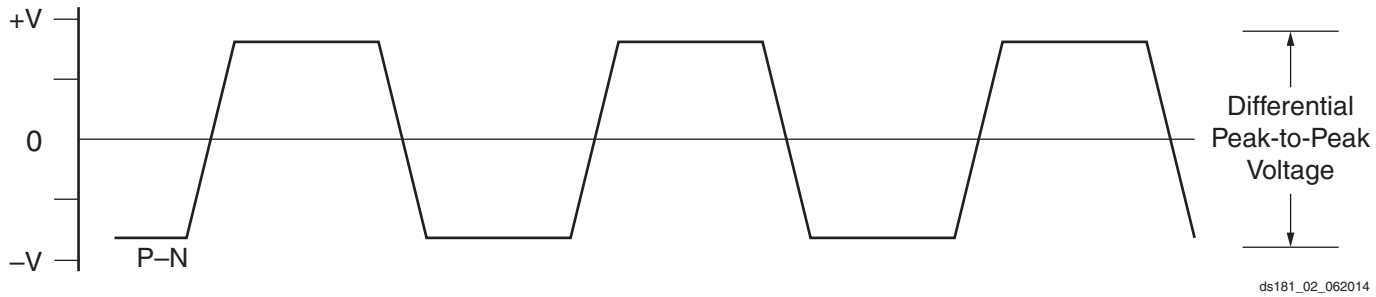

Figure 4: **Differential Peak-to-Peak Voltage**

Note: In Figure 4, differential peak-to-peak voltage = single-ended peak-to-peak voltage x 2.

Table 51 summarizes the DC specifications of the clock input of the GTP transceiver. Consult *7 Series FPGAs GTP Transceiver User Guide* (UG482) for further details.

Table 51: **GTP Transceiver Clock DC Input Level Specification**

Symbol	DC Parameter	Min	Typ	Max	Units
V_{IDIFF}	Differential peak-to-peak input voltage	350	–	2000	mV
R_{IN}	Differential input resistance	–	100	–	Ω
C_{EXT}	Required external AC coupling capacitor	–	100	–	nF

GTP Transceiver Switching Characteristics

Consult *7 Series FPGAs GTP Transceiver User Guide* (UG482) for further information.

Table 52: **GTP Transceiver Performance**

Symbol	Description	Output Divider	Speed Grade								Units
			-3 (1.0V)		-2 (1.0V) -2LE (1.0V)		-1 (1.0V) -1LI (0.95V) -1Q (1.0V) -1M (1.0V)		-2LE (0.9V)		
			Package Type								
			FF FB SB	FG FT CS CP	FF FB SB RB RS	FG FT CS CP	FF FB SB RB RS	FG FT CS CP	FF FB SB	FG FT CS CP	
F_{GTPMAX}	Maximum GTP transceiver data rate		6.6	6.25	6.6	6.25	3.75	3.75	3.75	3.75	Gb/s
F_{GTPMIN}	Minimum GTP transceiver data rate		0.500	0.500	0.500	0.500	0.500	0.500	0.500	0.500	Gb/s
$F_{GTPRANGE}$	PLL line rate range	1	3.2–6.6		3.2–6.6		3.2–3.75		3.2–3.75		Gb/s
		2	1.6–3.3		1.6–3.3		1.6–3.2		1.6–3.2		Gb/s
		4	0.8–1.65		0.8–1.65		0.8–1.6		0.8–1.6		Gb/s
		8	0.5–0.825		0.5–0.825		0.5–0.8		0.5–0.8		Gb/s
$F_{GTPPLLRANGE}$	GTP transceiver PLL frequency range		1.6–3.3		1.6–3.3		1.6–3.3		1.6–3.3		GHz

Table 53: **GTP Transceiver Dynamic Reconfiguration Port (DRP) Switching Characteristics**

Symbol	Description	Speed Grade					Units
		1.0V			0.95V	0.9V	
		-3	-2/-2LE	-1	-1LI	-2LE	
$F_{GTPDRPCLK}$	GTPDRPCLK maximum frequency	175	175	156	156	125	MHz

Table 54: **GTP Transceiver Reference Clock Switching Characteristics**

Symbol	Description	Conditions	All Speed Grades			Units
			Min	Typ	Max	
F_{GCLK}	Reference clock frequency range		60	–	660	MHz
T_{RCLK}	Reference clock rise time	20% – 80%	–	200	–	ps
T_{FCLK}	Reference clock fall time	80% – 20%	–	200	–	ps
T_{DCREF}	Reference clock duty cycle	Transceiver PLL only	40	–	60	%

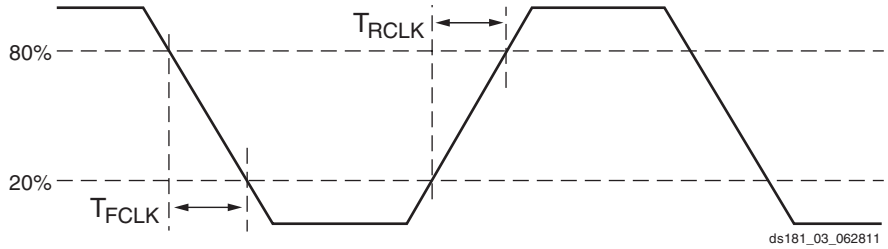

Figure 5: **Reference Clock Timing Parameters**

Table 55: **GTP Transceiver PLL/Lock Time Adaptation**

Symbol	Description	Conditions	All Speed Grades			Units
			Min	Typ	Max	
T_{LOCK}	Initial PLL lock		–	–	1	ms
T_{DLOCK}	Clock recovery phase acquisition and adaptation time.	After the PLL is locked to the reference clock, this is the time it takes to lock the clock data recovery (CDR) to the data present at the input.	–	50,000	2.3×10^6	UI

Table 56: **GTP Transceiver User Clock Switching Characteristics**(1)

Symbol	Description	Conditions	Speed Grade					Units
			1.0V			0.95V	0.9V	
			-3	-2/-2LE	-1	-1LI	-2LE	
F_{TXOUT}	TXOUTCLK maximum frequency		412.500	412.500	234.375	234.375	234.375	MHz
F_{RXOUT}	RXOUTCLK maximum frequency		412.500	412.500	234.375	234.375	234.375	MHz
F_{TXIN}	TXUSRCLK maximum frequency	16-bit data path	412.500	412.500	234.375	234.375	234.375	MHz
F_{RXIN}	RXUSRCLK maximum frequency	16-bit data path	412.500	412.500	234.375	234.375	234.375	MHz
F_{TXIN2}	TXUSRCLK2 maximum frequency	16-bit data path	412.500	412.500	234.375	234.375	234.375	MHz
F_{RXIN2}	RXUSRCLK2 maximum frequency	16-bit data path	412.500	412.500	234.375	234.375	234.375	MHz

Notes:

1. Clocking must be implemented as described in *7 Series FPGAs GTP Transceiver User Guide* (UG482).

Table 57: **GTP Transceiver Transmitter Switching Characteristics**

Symbol	Description	Condition	Min	Typ	Max	Units
F_{GTPTX}	Serial data rate range		0.500	–	F_{GTPMAX}	Gb/s
T_{RTX}	TX rise time	20%–80%	–	50	–	ps
T_{FTX}	TX fall time	80%–20%	–	50	–	ps
T_{LLSKEW}	TX lane-to-lane skew(1)		–	–	500	ps
$V_{TXOOBVDPP}$	Electrical idle amplitude		–	–	20	mV
$T_{TXOOBTRANSITION}$	Electrical idle transition time		–	–	140	ns
$TJ_{6.6}$	Total Jitter(2)(3)	6.6 Gb/s	–	–	0.30	UI
$DJ_{6.6}$	Deterministic Jitter(2)(3)		–	–	0.15	UI
$TJ_{5.0}$	Total Jitter(2)(3)	5.0 Gb/s	–	–	0.30	UI
$DJ_{5.0}$	Deterministic Jitter(2)(3)		–	–	0.15	UI
$TJ_{4.25}$	Total Jitter(2)(3)	4.25 Gb/s	–	–	0.30	UI
$DJ_{4.25}$	Deterministic Jitter(2)(3)		–	–	0.15	UI
$TJ_{3.75}$	Total Jitter(2)(3)	3.75 Gb/s	–	–	0.30	UI
$DJ_{3.75}$	Deterministic Jitter(2)(3)		–	–	0.15	UI
$TJ_{3.2}$	Total Jitter(2)(3)	3.20 Gb/s(4)	–	–	0.2	UI
$DJ_{3.2}$	Deterministic Jitter(2)(3)		–	–	0.1	UI
$TJ_{3.2L}$	Total Jitter(2)(3)	3.20 Gb/s(5)	–	–	0.32	UI
$DJ_{3.2L}$	Deterministic Jitter(2)(3)		–	–	0.16	UI
$TJ_{2.5}$	Total Jitter(2)(3)	2.5 Gb/s(6)	–	–	0.20	UI
$DJ_{2.5}$	Deterministic Jitter(2)(3)		–	–	0.08	UI
$TJ_{1.25}$	Total Jitter(2)(3)	1.25 Gb/s(7)	–	–	0.15	UI
$DJ_{1.25}$	Deterministic Jitter(2)(3)		–	–	0.06	UI
TJ_{500}	Total Jitter(2)(3)	500 Mb/s	–	–	0.1	UI
DJ_{500}	Deterministic Jitter(2)(3)		–	–	0.03	UI

Notes:

1. Using same REFCLK input with TX phase alignment enabled for up to four consecutive transmitters (one fully populated GTP Quad).
2. Using PLL[0/1]_FBDIV = 2, 20-bit internal data width. These values are NOT intended for protocol specific compliance determinations.
3. All jitter values are based on a bit-error ratio of $1e^{-12}$.
4. PLL frequency at 3.2 GHz and TXOUT_DIV = 2.
5. PLL frequency at 1.6 GHz and TXOUT_DIV = 1.
6. PLL frequency at 2.5 GHz and TXOUT_DIV = 2.
7. PLL frequency at 2.5 GHz and TXOUT_DIV = 4.

Table 58: **GTP Transceiver Receiver Switching Characteristics**

Symbol	Description		Min	Typ	Max	Units
F_{GTPRX}	Serial data rate	RX oversampler not enabled	0.500	–	F_{GTPMAX}	Gb/s
$T_{RXELECIDLE}$	Time for RXELECIDLE to respond to loss or restoration of data		–	10	–	ns
$RX_{OOBVDPP}$	OOB detect threshold peak-to-peak		60	–	150	mV
RX_{SST}	Receiver spread-spectrum tracking(1)	Modulated @ 33 kHz	–5000	–	5000	ppm
RX_{RL}	Run length (CID)		–	–	512	UI
RX_{PPMTOL}	Data/REFCLK PPM offset tolerance		–1250	–	1250	ppm
SJ Jitter Tolerance(2)						
$JT_SJ_{6.6}$	Sinusoidal Jitter(3)	6.6 Gb/s	0.44	–	–	UI
$JT_SJ_{5.0}$	Sinusoidal Jitter(3)	5.0 Gb/s	0.44	–	–	UI
$JT_SJ_{4.25}$	Sinusoidal Jitter(3)	4.25 Gb/s	0.44	–	–	UI
$JT_SJ_{3.75}$	Sinusoidal Jitter(3)	3.75 Gb/s	0.44	–	–	UI
$JT_SJ_{3.2}$	Sinusoidal Jitter(3)	3.2 Gb/s(4)	0.45	–	–	UI
$JT_SJ_{3.2L}$	Sinusoidal Jitter(3)	3.2 Gb/s(5)	0.45	–	–	UI
$JT_SJ_{2.5}$	Sinusoidal Jitter(3)	2.5 Gb/s(6)	0.5	–	–	UI
$JT_SJ_{1.25}$	Sinusoidal Jitter(3)	1.25 Gb/s(7)	0.5	–	–	UI
JT_SJ_{500}	Sinusoidal Jitter(3)	500 Mb/s	0.4	–	–	UI
SJ Jitter Tolerance with Stressed Eye(2)						
$JT_TJSE_{3.2}$	Total Jitter with Stressed Eye(8)	3.2 Gb/s	0.70	–	–	UI
$JT_TJSE_{6.6}$		6.6 Gb/s	0.70	–	–	UI
$JT_SJSE_{3.2}$	Sinusoidal Jitter with Stressed Eye(8)	3.2 Gb/s	0.1	–	–	UI
$JT_SJSE_{6.6}$		6.6 Gb/s	0.1	–	–	UI

Notes:

1. Using RXOUT_DIV = 1, 2, and 4.
2. All jitter values are based on a bit error ratio of $1e^{-12}$.
3. The frequency of the injected sinusoidal jitter is 10 MHz.
4. PLL frequency at 3.2 GHz and RXOUT_DIV = 2.
5. PLL frequency at 1.6 GHz and RXOUT_DIV = 1.
6. PLL frequency at 2.5 GHz and RXOUT_DIV = 2.
7. PLL frequency at 2.5 GHz and RXOUT_DIV = 4.
8. Composite jitter.

GTP Transceiver Protocol Jitter Characteristics

For Table 59 through Table 63, the *7 Series FPGAs GTP Transceiver User Guide* (UG482) contains recommended settings for optimal usage of protocol specific characteristics.

Table 59: **Gigabit Ethernet Protocol Characteristics**

Description	Line Rate (Mb/s)	Min	Max	Units
Gigabit Ethernet Transmitter Jitter Generation				
Total transmitter jitter (T_TJ)	1250	–	0.24	UI
Gigabit Ethernet Receiver High Frequency Jitter Tolerance				
Total receiver jitter tolerance	1250	0.749	–	UI

Table 60: **XAUI Protocol Characteristics**

Description	Line Rate (Mb/s)	Min	Max	Units
XAUI Transmitter Jitter Generation				
Total transmitter jitter (T_TJ)	3125	–	0.35	UI
XAUI Receiver High Frequency Jitter Tolerance				
Total receiver jitter tolerance	3125	0.65	–	UI

Table 61: **PCI Express Protocol Characteristics(1)**

Standard	Description	Line Rate (Mb/s)	Min	Max	Units
PCI Express Transmitter Jitter Generation					
PCI Express Gen 1	Total transmitter jitter	2500	–	0.25	UI
PCI Express Gen 2	Total transmitter jitter	5000	–	0.25	UI
PCI Express Receiver High Frequency Jitter Tolerance					
PCI Express Gen 1	Total receiver jitter tolerance	2500	0.65	–	UI
PCI Express Gen 2(2)	Receiver inherent timing error	5000	0.40	–	UI
	Receiver inherent deterministic timing error		0.30	–	UI

Notes:

1. Tested per card electromechanical (CEM) methodology.
2. Using common REFCLK.

Table 62: **CEI-6G Protocol Characteristics**

Description	Line Rate (Mb/s)	Interface	Min	Max	Units
CEI-6G Transmitter Jitter Generation					
Total transmitter jitter(1)	4976–6375	CEI-6G-SR	–	0.3	UI
CEI-6G Receiver High Frequency Jitter Tolerance					
Total receiver jitter tolerance(1)	4976–6375	CEI-6G-SR	0.6	–	UI

Notes:

1. Tested at most commonly used line rate of 6250 Mb/s using 390.625 MHz reference clock.

Table 63: **CPRI Protocol Characteristics**

Description	Line Rate (Mb/s)	Min	Max	Units
CPRI Transmitter Jitter Generation				
Total transmitter jitter	614.4	–	0.35	UI
	1228.8	–	0.35	UI
	2457.6	–	0.35	UI
	3072.0	–	0.35	UI
	4915.2	–	0.3	UI
	6144.0	–	0.3	UI
CPRI Receiver Frequency Jitter Tolerance				
Total receiver jitter tolerance	614.4	0.65	–	UI
	1228.8	0.65	–	UI
	2457.6	0.65	–	UI
	3072.0	0.65	–	UI
	4915.2(1)	0.60	–	UI
	6144.0(1)	0.60	–	UI

Notes:
1. Tested to CEI-6G-SR.

Integrated Interface Block for PCI Express Designs Switching Characteristics

More information and documentation on solutions for PCI Express designs can be found at:
www.xilinx.com/products/technology/pci-express.html

Table 64: **Maximum Performance for PCI Express Designs**

Symbol	Description	Speed Grade					Units
		1.0V			0.95V	0.9V	
		-3	-2/-2LE	-1	-1LI	-2LE	
$F_{PIPECLK}$	Pipe clock maximum frequency	250.00	250.00	250.00	250.00	250.00	MHz
$F_{USERCLK}$	User clock maximum frequency	250.00	250.00	250.00	250.00	250.00	MHz
$F_{USERCLK2}$	User clock 2 maximum frequency	250.00	250.00	250.00	250.00	250.00	MHz
F_{DRPCLK}	DRP clock maximum frequency	250.00	250.00	250.00	250.00	250.00	MHz

Notes:
1. Refer to PG054, *7 Series FPGAs Integrated Block for PCI Express Product Guide* for specific supported core configurations.

XADC Specifications

Table 65: **XADC Specifications**

Parameter	Symbol	Comments/Conditions	Min	Typ	Max	Units
V_{CCADC} = 1.8V ± 5%, V_{REFP} = 1.25V, V_{REFN} = 0V, ADCCLK = 26 MHz, –55°C ≤ Tj ≤ 125°C, Typical values at T_j=+40°C						
ADC Accuracy(1)						
Resolution			12	–	–	Bits
Integral Nonlinearity(2)	INL	–40°C ≤ T_j ≤ 100°C	–	–	±2	LSBs
		–55°C ≤ T_j < –40°C; 100°C < T_j ≤ 125°C	–	–	±3	LSBs
Differential Nonlinearity	DNL	No missing codes, guaranteed monotonic	–	–	±1	LSBs
Offset Error	Unipolar	–40°C ≤ T_j ≤ 100°C	–	–	±8	LSBs
		–55°C ≤ T_j < –40°C; 100°C < T_j ≤ 125°C	–	–	±12	LSBs
	Bipolar	–55°C ≤ T_j ≤ 125°C	–	–	±4	LSBs
Gain Error			–	–	±0.5	%
Offset Matching			–	–	4	LSBs
Gain Matching			–	–	0.3	%
Sample Rate			–	–	1	MS/s
Signal to Noise Ratio(2)	SNR	F_{SAMPLE} = 500KS/s, F_{IN} = 20 kHz	60	–	–	dB
RMS Code Noise		External 1.25V reference	–	–	2	LSBs
		On-chip reference	–	3	–	LSBs
Total Harmonic Distortion(2)	THD	F_{SAMPLE} = 500KS/s, F_{IN} = 20 kHz	70	–	–	dB
Analog Inputs(3)						
ADC Input Ranges		Unipolar operation	0	–	1	V
		Bipolar operation	–0.5	–	+0.5	V
		Unipolar common mode range (FS input)	0	–	+0.5	V
		Bipolar common mode range (FS input)	+0.5	–	+0.6	V
Maximum External Channel Input Ranges		Adjacent analog channels set within these ranges should not corrupt measurements on adjacent channels	–0.1	–	V_{CCADC}	V
Auxiliary Channel Full Resolution Bandwidth	FRBW		250	–	–	kHz
On-Chip Sensors						
Temperature Sensor Error		–40°C ≤ T_j ≤ 100°C	–	–	±4	°C
		–55°C ≤ T_j < –40°C; 100°C < T_j ≤ 125°C	–	–	±6	°C
Supply Sensor Error		–40°C ≤ T_j ≤ 100°C	–	–	±1	%
		–55°C ≤ T_j < –40°C; 100°C < T_j ≤ 125°C	–	–	±2	%
Conversion Rate(4)						
Conversion Time - Continuous	t_{CONV}	Number of ADCCLK cycles	26	–	32	Cycles
Conversion Time - Event	t_{CONV}	Number of CLK cycles	–	–	21	Cycles
DRP Clock Frequency	DCLK	DRP clock frequency	8	–	250	MHz
ADC Clock Frequency	ADCCLK	Derived from DCLK	1	–	26	MHz
DCLK Duty Cycle			40	–	60	%

Table 65: **XADC Specifications *(Cont'd)***

Parameter	Symbol	Comments/Conditions	Min	Typ	Max	Units
XADC Reference[5]						
External Reference	V_{REFP}	Externally supplied reference voltage	1.20	1.25	1.30	V
On-Chip Reference		Ground V_{REFP} pin to AGND, $-40°C \le T_j \le 100°C$	1.2375	1.25	1.2625	V
		Ground V_{REFP} pin to AGND, $-55°C \le T_j < -40°C$; $100°C < T_j \le 125°C$	1.225	1.25	1.275	V

Notes:

1. Offset and gain errors are removed by enabling the XADC automatic gain calibration feature. The values are specified for when this feature is enabled.
2. Only specified for bitstream option XADCEnhancedLinearity = ON.
3. See the ADC chapter in the *7 Series FPGAs and Zynq-7000 AP SoC XADC Dual 12-Bit 1 MSPS Analog-to-Digital Converter* (UG480) for a detailed description.
4. See the Timing chapter in the *7 Series FPGAs and Zynq-7000 AP SoC XADC Dual 12-Bit 1 MSPS Analog-to-Digital Converter* (UG480) for a detailed description.
5. Any variation in the reference voltage from the nominal V_{REFP} = 1.25V and V_{REFN} = 0V will result in a deviation from the ideal transfer function. This also impacts the accuracy of the internal sensor measurements (i.e., temperature and power supply). However, for external ratiometric type applications allowing reference to vary by ±4% is permitted.

Configuration Switching Characteristics

Table 66: **Configuration Switching Characteristics**

Symbol	Description	Speed Grade					Units
		1.0V			0.95V	0.9V	
		-3	-2/-2LE	-1	-1LI	-2LE	
Power-up Timing Characteristics							
T_{PL}[1]	Program latency	5.00	5.00	5.00	5.00	5.00	ms, Max
T_{POR}[1]	Power-on reset (50 ms ramp rate time)	10/50	10/50	10/50	10/50	10/50	ms, Min/Max
	Power-on reset (1 ms ramp rate time)	10/35	10/35	10/35	10/35	10/35	ms, Min/Max
$T_{PROGRAM}$	Program pulse width	250.00	250.00	250.00	250.00	250.00	ns, Min
CCLK Output (Master Mode)							
T_{ICCK}	Master CCLK output delay	150.00	150.00	150.00	150.00	150.00	ns, Min
T_{MCCKL}	Master CCLK clock Low time duty cycle	40/60	40/60	40/60	40/60	40/60	%, Min/Max
T_{MCCKH}	Master CCLK clock High time duty cycle	40/60	40/60	40/60	40/60	40/60	%, Min/Max
F_{MCCK}	Master CCLK frequency	100.00	100.00	100.00	100.00	70.00	MHz, Max
	Master CCLK frequency for AES encrypted x16	50.00	50.00	50.00	50.00	35.00	MHz, Max
F_{MCCK_START}	Master CCLK frequency at start of configuration	3.00	3.00	3.00	3.00	3.00	MHz, Typ
$F_{MCCKTOL}$	Frequency tolerance, master mode with respect to nominal CCLK	±50	±50	±50	±50	±50	%, Max
CCLK Input (Slave Modes)							
T_{SCCKL}	Slave CCLK clock minimum Low time	2.50	2.50	2.50	2.50	2.50	ns, Min
T_{SCCKH}	Slave CCLK clock minimum High time	2.50	2.50	2.50	2.50	2.50	ns, Min
F_{SCCK}	Slave CCLK frequency	100.00	100.00	100.00	100.00	70.00	MHz, Max
EMCCLK Input (Master Mode)							
T_{EMCCKL}	External master CCLK Low time	2.50	2.50	2.50	2.50	2.50	ns, Min
T_{EMCCKH}	External master CCLK High time	2.50	2.50	2.50	2.50	2.50	ns, Min
F_{EMCCK}	External master CCLK frequency	100.00	100.00	100.00	100.00	70.00	MHz, Max

Table 66: **Configuration Switching Characteristics *(Cont'd)***

Symbol	Description	Speed Grade					Units
		1.0V			0.95V	0.9V	
		-3	-2/-2LE	-1	-1LI	-2LE	
Internal Configuration Access Port							
F_{ICAPCK}	Internal configuration access port (ICAPE2) clock frequency	100.00	100.00	100.00	100.00	70.00	MHz, Max
Master/Slave Serial Mode Programming Switching							
T_{DCCK}/ T_{CCKD}	DIN setup/hold	4.00/0.00	4.00/0.00	4.00/0.00	4.00/0.00	5.00/0.00	ns, Min
T_{CCO}	DOUT clock to out	8.00	8.00	8.00	8.00	9.00	ns, Max
SelectMAP Mode Programming Switching							
T_{SMDCCK}/ T_{SMCCKD}	D[31:00] setup/hold	4.00/0.00	4.00/0.00	4.00/0.00	4.00/0.00	4.50/0.00	ns, Min
$T_{SMCSCCK}$/ $T_{SMCCKCS}$	CSI_B setup/hold	4.00/0.00	4.00/0.00	4.00/0.00	4.00/0.00	5.00/0.00	ns, Min
T_{SMWCCK}/ T_{SMCCKW}	RDWR_B setup/hold	10.00/0.00	10.00/0.00	10.00/0.00	10.00/0.00	12.00/0.00	ns, Min
$T_{SMCKCSO}$	CSO_B clock to out (330 Ω pull-up resistor required)	7.00	7.00	7.00	7.00	8.00	ns, Max
T_{SMCO}	D[31:00] clock to out in readback	8.00	8.00	8.00	8.00	10.00	ns, Max
F_{RBCCK}	Readback frequency	100.00	100.00	100.00	100.00	70.00	MHz, Max
Boundary-Scan Port Timing Specifications							
T_{TAPTCK}/ T_{TCKTAP}	TMS and TDI setup/hold	3.00/2.00	3.00/2.00	3.00/2.00	3.00/2.00	3.00/2.00	ns, Min
T_{TCKTDO}	TCK falling edge to TDO output	7.00	7.00	7.00	7.00	8.50	ns, Max
F_{TCK}	TCK frequency	66.00	66.00	66.00	66.00	50.00	MHz, Max
BPI Flash Master Mode Programming Switching							
T_{BPICCO}(2)	A[28:00], RS[1:0], FCS_B, FOE_B, FWE_B, ADV_B clock to out	8.50	8.50	8.50	8.50	10.00	ns, Max
T_{BPIDCC}/ T_{BPICCD}	D[15:00] setup/hold	4.00/0.00	4.00/0.00	4.00/0.00	4.00/0.00	4.50/0.00	ns, Min
SPI Flash Master Mode Programming Switching							
T_{SPIDCC}/ T_{SPICCD}	D[03:00] setup/hold	3.00/0.00	3.00/0.00	3.00/0.00	3.00/0.00	3.00/0.00	ns, Min
T_{SPICCM}	MOSI clock to out	8.00	8.00	8.00	8.00	9.00	ns, Max
$T_{SPICCFC}$	FCS_B clock to out	8.00	8.00	8.00	8.00	9.00	ns, Max
STARTUPE2 Ports							
$T_{USRCCLKO}$	STARTUPE2 USRCCLKO input to CCLK output	0.50/6.00	0.50/6.70	0.50/7.50	0.50/7.50	0.50/7.50	ns, Min/Max
$F_{CFGMCLK}$	STARTUPE2 CFGMCLK output frequency	65.00	65.00	65.00	65.00	65.00	MHz, Typ
$F_{CFGMCLKTOL}$	STARTUPE2 CFGMCLK output frequency tolerance	±50	±50	±50	±50	±50	%, Max

Table 66: **Configuration Switching Characteristics *(Cont'd)***

Symbol	Description	Speed Grade					Units
		1.0V			0.95V	0.9V	
		-3	-2/-2LE	-1	-1LI	-2LE	
Device DNA Access Port							
F_{DNACK}	DNA access port (DNA_PORT)	100.00	100.00	100.00	100.00	70.00	MHz, Max

Notes:

1. To support longer delays in configuration, use the design solutions described in *7 Series FPGA Configuration User Guide* (UG470).
2. Only during configuration, the last edge is determined by a weak pull-up/pull-down resistor in the I/O.

eFUSE Programming Conditions

Table 67 lists the programming conditions specifically for eFUSE. For more information, see *7 Series FPGA Configuration User Guide* (UG470).

Table 67: **eFUSE Programming Conditions(1)**

Symbol	Description	Min	Typ	Max	Units
I_{FS}	V_{CCAUX} supply current	–	–	115	mA
T_j	Temperature range	15	–	125	°C

Notes:

1. The FPGA must not be configured during eFUSE programming.

Revision History

The following table shows the revision history for this document:

Date	Version	Description
09/26/2011	1.0	Initial Xilinx release.
11/07/2011	1.1	Revised the V_{OCM} specification in Table 11. Updated the AC Switching Characteristics based upon the ISE 13.3 software v1.02 speed specification throughout document including Table 13 and Table 14. Added MMCM_$T_{FBDELAY}$ while adding MMCM_ to the symbol names of a few specifications in Table 37 and PLL to the symbol names in Table 38. In Table 39 through Table 46, updated the pin-to-pin description with the SSTL15 standard. Updated units in Table 46.
02/13/2012	1.2	Updated the Artix-7 family of devices listed throughout the entire data sheet. Updated the AC Switching Characteristics based upon the ISE 13.4 software v1.03 for the -3, -2, and -1 speed grades and v1.00 for the -2L speed grade. Updated summary description on page 1. In Table 2, revised V_{CCO} for the 3.3V HR I/O banks and updated T_j. Updated the notes in Table 5. Added MGTAVCC and MGTAVTT power supply ramp times to Table 7. Rearranged Table 8, added Mobile_DDR, HSTL_I_18, HSTL_II_18, HSUL_12, SSTL135_R, SSTL15_R, and SSTL12 and removed DIFF_SSTL135, DIFF_SSTL18_I, DIFF_SSTL18_II, DIFF_HSTL_I, and DIFF_HSTL_II. Added Table 9 and Table 10. Revised the specifications in Table 11. Revised V_{IN} in Table 50. Updated the eFUSE Programming Conditions section and removed the endurance table. Added the table. Revised F_{TXIN} and F_{RXIN} in Table 56. Revised I_{CCADC} and updated Note 1 in Table 65. Revised DDR LVDS transmitter data width in Table 15. Removed notes from Table 27 as they are no longer applicable. Updated specifications in Table 66. Updated Note 1 in Table 36.

Date	Version	Description
06/01/2012	1.3	Reorganized entire data sheet including adding Table 43 and Table 47. Updated T_{SOL} in Table 1. Updated I_{BATT} and added R_{IN_TERM} to Table 3. Updated Power-On/Off Power Supply Sequencing section with regards to GTP transceivers. In Table 8, updated many parameters including SSTL135 and SSTL135_R. Removed V_{OX} column and added DIFF_HSUL_12 to Table 10. Updated V_{OL} in Table 11. Updated Table 15 and removed notes 2 and 3. Updated Table 16. Updated the AC Switching Characteristics based upon the ISE 14.1 software v1.03 for the -3, -2, -2L (1.0V), -1, and v1.01 for the -2L (0.9V) speed specifications throughout the document. In Table 30, updated Reset Delays section including Note 10 and Note 11. In Table 56, replaced F_{TXOUT} with F_{GLK}. Updated many of the XADC specifications in Table 65 and added Note 2. Updated and moved *Dynamic Reconfiguration Port (DRP) for MMCM Before and After DCLK* section from Table 66 to Table 37 and Table 38.
09/20/2012	1.4	In Table 1, updated the descriptions, changed V_{IN} and Note 2, and added Note 4. In Table 2, changed descriptions and notes. Updated parameters in Table 3. Added Table 4. Revised the Power-On/Off Power Supply Sequencing section. Updated standards and specifications in Table 8, Table 9, and Table 10. Removed the XC7A350T device from data sheet. Updated the AC Switching Characteristics section to the ISE 14.2 speed specifications throughout the document. Updated the IOB Pad Input/Output/3-State discussion and changed Table 18 by adding $T_{IOIBUFDISABLE}$. Removed many of the combinatorial delay specifications and T_{CINCK}/T_{CKCIN} from Table 27.Changed F_{PFDMAX} conditions in Table 37 and Table 38. Updated the GTP Transceiver Specifications section, moved the GTP Transceiver DC characteristics section to the overall DC Characteristics section, and added the GTP Transceiver Protocol Jitter Characteristics section. In Table 65, updated Note 1. In Table 66, updated T_{POR}.
02/01/2013	1.5	Updated the AC Switching Characteristics based upon the 14.4/2012.4 device pack for ISE 14.4 and Vivado 2012.4, both at v1.07 for the -3, -2, -2L (1.0V), -1 speed specifications, and v1.05 for the -2L (0.9V) speed specifications throughout the document. Production changes to Table 13 and Table 14 for -3, -2, -2L (1.0V), -1 speed specifications. Revised I_{DCIN} and I_{DCOUT} and added Note 5 in Table 1. Added Note 2 to Table 2. Updated Table 5. Added minimum current specifications to Table 6. Removed SSTL12 and HSTL_I_12 from Table 8. Removed DIFF_SSTL12 from Table 10. Updated Table 13. Added a 2:1 memory controller section to Table 16. Updated Note 1 in Table 34. Revised Table 36. Updated Note 1 and Note 2 in Table 49. Updated D_{VPPIN} in Table 50. Updated V_{IDIFF} in Table 51. Removed T_{LOCK} and T_{PHASE} and revised F_{GCLK} in Table 54. Updated T_{DLOCK} in Table 55. Updated Table 56. In Table 57, updated T_{RTX}, T_{FTX}, $V_{TXOOBVDPP}$, and revised Note 1 through Note 7. In Table 58, updated RX_{SST} and RX_{PPMTOL} and revised Note 4 through Note 7. In Table 63, revised and added Note 1. Revised the maximum external channel input ranges in Table 65. In Table 66, revised F_{MCCK} and added the Internal Configuration Access Port section.
04/17/2013	1.6	Updated the AC Switching Characteristics based upon v1.07 of the ISE 14.5 and Vivado 2013.1 for the -3, -2, -2L (1.0V), and -1 speed specifications, and v1.05 for the -2L (0.9V) speed specifications. Production changes to Table 13 and Table 14 for -2L (0.9V) speed specifications. In Table 1, revised V_{IN} (I/O input voltage) to match values in Table 4 and combined Note 4 with old Note 5 and then added new Note 5. Revised V_{IN} description, removed Note 10, and added Note 7 in Table 2. Updated first 3 rows in Table 4. Also revised PCI33_3 voltage minimum in Table 8 to match values in Table 1 and Table 4. Added Note 1 to Table 11. Removed Note 1 from Table 14. Updated Table 16 title. Throughout the data sheet (Table 28, Table 29, and Table 44) removed the obvious note “A Zero “0” Hold Time listing indicates no hold time or a negative hold time.”
09/04/2013	1.7	Added new Artix-7 devices (XC7A35T, XC7A50T, and XC7A75T) throughout. In Table 1, updated I_{DCIN} and I_{DCOUT} for cases when floating, at $V_{MGTAVTT}$, or GND. Added back Note 1 to Table 14. Added CPG package to Table 50 and Table 52.
11/27/2013	1.8	Added automotive and expanded temperature range Artix-7 devices throughout. Added -1M and -1Q speed grades throughout. Added reference to *7 Series FPGAs Overview*, *Defense-Grade 7 Series FPGAs Overview*, and *XA Artix-7 FPGAs Overview* in Introduction. In Table 2, added junction temperature operating ranges for expanded (Q) and military (M) devices, and added Note 3. In Table 3, removed commercial (C), industrial (I), and extended (E) from descriptions of R_{IN_TERM}. Updated temperature ranges in Table 4. Removed notes from Table 6. Added T_J = 125°C to Conditions column for $T_{VCCO2VCCAUX}$ in Table 7. In AC Switching Characteristics, updated first paragraph, added Table 12, and added -1Q/-1M speed grades to other tables in this section. In Table 52, added RB and RS packages, and updated F_{GTPMAX}. In Table 65, updated ADC Accuracy, On-Chip Sensors, XADC Reference sections and notes. Added $T_{USRCCLKO}$ and F_{DNACK} to Table 66.

Date	Version	Description
01/07/2014	1.9	In Table 13, promoted all XC7A75T speed grades from Advance to Production and all XQ7A50T speed grades from Preliminary to Advance. In Table 14, inserted “Vivado tools 2013.3” for the production XC7A75T speed grades.
01/23/2014	1.10	Updated the AC Switching Characteristics based upon ISE 14.7 and Vivado 2013.4. Updated Note 5 in Table 2. Removed pad pull-down @ V_{IN} = 1.8V for I_{RPD} in Table 3. Added Note 2 to Table 4. Removed XQ7A50T fromTable 12, Table 13, and Table 14. In Table 13, changed speed grades for XA Artix-7 FPGAs and defense-grade Artix-7Q family from -2 to -2I and -1 to -1I, and moved all speed grades of XA7A100T, and -1I and -2I speed grades of XQ7A100T from Preliminary to Production. In Table 14, updated production software for XA7A100T and XQ7A100T. Added HSUL_12_F, DIFF_HSUL_12_F, MOBILE_DDR_S, MOBILE_DDR_F, DIFF_MOBILE_DDR_S, and DIFF_MOBILE_DDR_F to Table 17. Removed introductory text in Device Pin-to-Pin Output Parameter Guidelines.
03/04/2014	1.11	Updated Note 2 in Table 4. In Table 13, moved XQ7A100T -1M speed grade from Preliminary to Production. In Table 14, added production software for XQ7A100T -1M speed grade.
03/28/2014	1.12	In Table 5, added I_{CCINTQ}, I_{CCOQ}, I_{CCAUXQ}, and $I_{CCBRAMQ}$ values for XC7A35T, XC7A50T, XA7A35T, XA7A50T, and XQ7A50T devices. In Table 6, added power-on current values for XC7A35T, XC7A50T, XA7A35T, XA7A50T, and XQ7A50T devices. In Table 12, added row for XC7A35T, XC7A50T, and XC7A75T devices. In Table 13, moved all speed grades of XC7A35T and XC7A50T devices from Advance to Production, and added XQ7A50T. In Table 14, added XQ7A50T and production software for XC7A35T and XC7A50T -3, -2, -2L (1.0V), -1, and -2L (0.9V) speed grades. For $F_{IDELAYCTRL_REF}$ in Table 25, updated REFCLK frequency of 300 MHz, added REFCLK frequency of 400 MHz, and updated Note 1. In Table 36, added T_{CKSKEW} data for XC7A35T and XC7A50T devices. In Table 39, updated T_{ICKOF} data for -1 and -2L (0.9V) speed grades of XC7A35T and XC7A50T devices. In Table 40, updated $T_{ICKOFFAR}$ data for -1 and -2L (0.9V) speed grades of XC7A35T and XC7A50T devices. In Table 41, added $T_{ICKOFMMCMCC}$ data for -2L (0.9V) speed grade of XC7A35T and XC7A50T devices. In Table 42, added $T_{ICKOFPLLCC}$ data for -2L (0.9V) speed grade of XC7A35T and XC7A50T devices. In Table 44, updated T_{PSFD}/T_{PHFD} data for -2/-2L, -1, and -2L (0.9V) speed grades of XC7A35T and XC7A50T devices. In Table 45, updated $T_{PSMMCMCC}/T_{PHMMCMCC}$ data for -1 and -2L (0.9V) speed grades of XC7A35T and XC7A50T devices. In Table 46, updated $T_{PSPLLCC}/T_{PHPLLCC}$ data for -1 and -2L (0.9V) speed grades of XC7A35T and XC7A50T devices. In Table 49, added package skew values for XC7A35T, XC7A50T, XA7A35T, XA7A50T, and XQ7A50T devices.
05/13/2014	1.13	In AC Switching Characteristics, updated to Vivado 2014.1. In Table 12, updated Vivado 2014.1 version numbers and consolidated rows. In Table 13, moved all XA7A75T speed grades from Advance to Preliminary and all XQ7A200T speed grades from Preliminary to Production. In Table 14, added production software for XQ7A200T -2, -1, and -1M speed grades. Added timing data for XA7A35T, XA7A50T, XA7A75T, and XQ7A50T devices to Table 39, Table 40, Table 41, Table 42, Table 44, Table 45, and Table 46.
07/01/2014	1.14	Updated Note 2 in Table 4 per the customer notice XCN14014: *7 Series FPGA and Zynq-7000 AP SoC I/O Undershoot Voltage Data Sheet Update*. In Power-On/Off Power Supply Sequencing, added sentence about there being no recommended sequence for supplies not shown. In AC Switching Characteristics, updated to Vivado 2014.2. In Table 12, added row for XQ7A50T. In Table 13, moved all XQ7A50T speed grades from Advance to Production. In Table 14, added production software for XQ7A50T -2, -1, and -1M speed grades. In Table 36, added T_{CKSKEW} values for XA7A35T, XA7A50T, and XQ7A50T. Updated description of T_{ICKOF} in Table 39 and added Note 2. Updated description of $T_{ICKOFFAR}$ in Table 40 and added Note 2. In Table 50, moved DV_{PPOUT} value of 1000 mV from Max to Min column, updated V_{IN} DC parameter description, and added Note 2. Added “peak-to-peak” to labels in Figure 3 and Figure 4. Added note after Figure 4. Added Note 1 to Table 64. In Table 66, replaced USRCCLK Output with STARTUPE2 Ports and added $F_{CFGMCLK}$ and $F_{CFGMCLKTOL}$.
09/23/2014	1.15	Removed 3.3V as descriptor of HR I/O banks throughout. Updated Note 3 in Table 5. In Table 13, moved all XA7A35T and XA7A50T speed grades from Advance to Production, and all XA7A75T speed grades from Preliminary to Production. In Table 14, added production software for XA7A35T, XA7A50T, and XA7A75T -2, -1, and -1Q speed grades, and removed Note 2. Added I/O Standard Adjustment Measurement Methodology.
10/09/2014	1.16	Added XC7A15T and XA7A15T devices. Added -1LI speed grade throughout. Updated Introduction. Added -1LI (0.95V) to description of V_{CCINT} and V_{CCBRAM} in Table 2. Updated Note 1 and added Note 2 to Table 14.

Date	Version	Description
11/19/2014	1.17	Replaced -2L speed grade with -2LE throughout. Updated descriptions of V_{CCINT} and V_{CCBRAM} in Table 2. Updated the AC Switching Characteristics based upon Vivado 2014.4. In Table 12, updated Vivado software version and added a row for V_{CCINT} = 0.95V. In Table 13, moved all speed grades for all devices from Advance to Production. In Table 14, added Vivado 2014.4 software version to -1LI (0.95V) speed grade column for commercial devices and applicable speed grades for XC7A15T and XA7A15T devices, and removed table notes. Added Selecting the Correct Speed Grade and Voltage in the Vivado Tools. In Table 16, moved LPDDR2 row to end of 2:1 Memory Controllers section. Updated speed grade heading row in Table 52.
03/18/2015	1.18	In Table 11, changed maximum V_{ICM} value from 1.425V to 1.500V. Removed LVDS 1.8V standard from Table 19 and Table 20. Removed minimum sample rate specification from Table 65.
09/24/2015	1.19	Updated first paragraph in Introduction. Assigned quiescent supply currents to -1LI speed grade Artix-7Q devices in Table 5. In Table 14, changed -1LI speed grade Artix-7Q device cells from N/A to blank and added Note 1. Removed DIFF_SSTL12 standard from Table 19 and Table 20. Changed -1LI speed grade Artix-7Q device cells from N/A to blank in Table 36, Table 39, Table 40, Table 41, Table 42, Table 44, Table 45, and Table 46. Added SBV484, FBV484, FBV676, and FFV1156 packages to Table 49. Removed Pb-free G suffix from packages in Table 50 and Table 52.
11/24/2015	1.20	In AC Switching Characteristics, updated to Vivado 2015.4. In Table 13, added -1LI (0.95V) speed grade to Production column for XQ7A50T, XQ7A100T, and XQ7A200T. In Table 14, removed table note and added Vivado 2015.4 software version to -1LI (0.95V) speed grade column for XQ7A50T, XQ7A100T, and XQ7A200T. In Table 36, added T_{CKSKEW} for XQ7A50T, XQ7A100T, and XQ7A200T at -1LI (0.95V) speed grade. Updated device pin-to-pin output parameter tables (Table 39 to Table 42) and input parameter tables (Table 44 to Table 46) for XQ7A50T, XQ7A100T, and XQ7A200T at -1LI (0.95V) speed grade.
09/27/2016	1.21	Added XC7A12T and XC7A25T devices. Updated the AC Switching Characteristics based upon Vivado 2016.3. In Table 19, updated V_{MEAS} values for LVCMOS 3.3V, LVTTL 3.3V, and PCI33 3.3V, and removed note 1. Removed LVDCI_15, HSLVDCI_15, LVDCI_15, and HSLVDCI_18 I/O standards from Table 20.
04/13/2017	1.22	Added 1.35V to Note 5 in Table 2. Updated the AC Switching Characteristics based upon Vivado 2016.4. In Table 13, added -2LE (0.9V) speed grade to Advance column for XC7A12T and XC7A25T. In Table 25, changed $T_{IDELAYRESOLUTION}$ units from ps to µs. In Table 36, updated T_{CKSKEW} for XC7A12T and XC7A25T devices at -2LE (0.9V) speed grade. Updated device pin-to-pin output parameter tables (Table 39 to Table 42) and input parameter tables (Table 44 to Table 46) for XC7A12T and XC7A25T devices at -2LE (0.9V) speed grade. Removed SBV484, FBV484, FBV676, and FFV1156 packages from Table 49 per the customer notice XCN16022: *Cross-ship of Lead-free Bump and Substrates in Lead-free (FFG/FBG/SBG) Packages*.
12/21/2017	1.23	Updated the AC Switching Characteristics based upon Vivado 2017.4. For XC7A12T and XC7A25T in Table 13, moved -3 and -2LE (0.9V) speed grades to Preliminary column and -2, -1, and -1LI (0.95V) speed grades to Production column. In Table 14, added Vivado 2017.4 software version to -2, -2LE, -1, and -1LI (0.95V) speed grade columns for XC7A12T and XC7A25T. In Table 44, updated T_{PSFD}/ T_{PHFD} for XC7A12T and XC7A25T at -3, -2/-2LE, -1 and -1LI (0.95V) speed grades. In Table 46, updated $T_{PSPLLCC}$ for XC7A12T and XC7A25T at -1 and -1LI (0.95V) speed grades. In Table 49, added package skew values for XC7A12T and XC7A25T.
04/04/2018	1.24	Added XA7A12T and XA7A25T devices. Updated the AC Switching Characteristics based upon Vivado 2018.1. In Table 13, for XC7A12T and XC7A25T moved -2LE (0.9V) speed grade to Production column and added XA7A12T and XA7A25T with -2I, -1I, and -1Q speed grades in Production column. Added Note 3 to Table 16.
06/18/2018	1.25	Updated the AC Switching Characteristics based upon Vivado 2018.2. In Table 13, for XC7A12T and XC7A25T moved -3 speed grade to Production. In Table 14, added Vivado 2018.2 software version to -3 speed grade for XC7A12T and XC7A25T and removed note.

Notice of Disclaimer

The information disclosed to you hereunder (the "Materials") is provided solely for the selection and use of Xilinx products. To the maximum extent permitted by applicable law: (1) Materials are made available "AS IS" and with all faults, Xilinx hereby DISCLAIMS ALL WARRANTIES AND CONDITIONS, EXPRESS, IMPLIED, OR STATUTORY, INCLUDING BUT NOT LIMITED TO WARRANTIES OF MERCHANTABILITY, NON-INFRINGEMENT, OR FITNESS FOR ANY PARTICULAR PURPOSE; and (2) Xilinx shall not be liable (whether in contract or tort, including negligence, or under any other theory of liability) for any loss or damage of any kind or nature related to, arising under, or in connection with, the Materials (including your use of the Materials), including for any direct, indirect, special, incidental, or consequential loss or damage (including loss of data, profits, goodwill, or any type of loss or damage suffered as a result of any action brought by a third party) even if such damage or loss was reasonably foreseeable or Xilinx had been advised of the possibility of the same. Xilinx assumes no obligation to correct any errors contained in the Materials, or to advise you of any corrections or update. You may not reproduce, modify, distribute, or publicly display the Materials without prior written consent. Certain products are subject to the terms and conditions of Xilinx's limited warranty, please refer to Xilinx's Terms of Sale which can be viewed at www.xilinx.com/legal.htm#tos; IP cores may be subject to warranty and support terms contained in a license issued to you by Xilinx. Xilinx products are not designed or intended to be fail-safe or for use in any application requiring fail-safe performance; you assume sole risk and liability for use of Xilinx products in such critical applications, please refer to Xilinx's Terms of Sale which can be viewed at www.xilinx.com/legal.htm#tos.

AUTOMOTIVE APPLICATIONS DISCLAIMER

AUTOMOTIVE PRODUCTS (IDENTIFIED AS "XA" IN THE PART NUMBER) ARE NOT WARRANTED FOR USE IN THE DEPLOYMENT OF AIRBAGS OR FOR USE IN APPLICATIONS THAT AFFECT CONTROL OF A VEHICLE ("SAFETY APPLICATION") UNLESS THERE IS A SAFETY CONCEPT OR REDUNDANCY FEATURE CONSISTENT WITH THE ISO 26262 AUTOMOTIVE SAFETY STANDARD ("SAFETY DESIGN"). CUSTOMER SHALL, PRIOR TO USING OR DISTRIBUTING ANY SYSTEMS THAT INCORPORATE PRODUCTS, THOROUGHLY TEST SUCH SYSTEMS FOR SAFETY PURPOSES. USE OF PRODUCTS IN A SAFETY APPLICATION WITHOUT A SAFETY DESIGN IS FULLY AT THE RISK OF CUSTOMER, SUBJECT ONLY TO APPLICABLE LAWS AND REGULATIONS GOVERNING LIMITATIONS ON PRODUCT LIABILITY.

FPGAMALL
Authorized Distributor

OUR CERTIFICATE

A long-term cooperative relationship can be built between global customers and us by providing excellent products

Business Type	Trading Company, Distributor/Wholesaler
Main Products	Electronic Integrated Circuit
Certifications	ISO9001
Total Annual Revenue	US$2.5 Million - US$5 Million
Country / Region	Hongkong, China
Total Employees	100 - 200 People
Year Established	2018
Main Markets	North America South Asia Western Europe

sales@fpgamall.com
+00852-56428680