FPGAMALL
Authorized Distributor

https://www.fpgamall.com

THE DATASHEET OF FPGA

sales@fpgamall.com
+00852-56428680

PRODUCT OBSOLETE / UNDER OBSOLESCENCE
XC95108-7PC84C Xilinx Inc. IC CPLD 108MC 7.5NS 84PLCC

XC95108 In-System Programmable CPLD

DS066 (v5.0) May 17, 2013

Product Specification

Features

- 7.5 ns pin-to-pin logic delays on all pins
- f_{CNT} to 125 MHz
- 108 macrocells with 2,400 usable gates
- Up to 108 user I/O pins
- 5V in-system programmable
  - Endurance of 10,000 program/erase cycles
  - Program/erase over full commercial voltage and temperature range
- Enhanced pin-locking architecture
- Flexible 36V18 Function Block
  - 90 product terms drive any or all of 18 macrocells within Function Block
  - Global and product term clocks, output enables, set and reset signals
- Extensive IEEE Std 1149.1 boundary-scan (JTAG) support
- Programmable power reduction mode in each macrocell
- Slew rate control on individual outputs
- User programmable ground pin capability
- Extended pattern security features for design protection
- High-drive 24 mA outputs
- 3.3V or 5V I/O capability
- Advanced CMOS 5V FastFLASH™ technology
- Supports parallel programming of more than one XC9500 concurrently
- Available in 84-pin PLCC, 100-pin PQFP, 100-pin TQFP, and 160-pin PQFP packages

Description

The XC95108 is a high-performance CPLD providing advanced in-system programming and test capabilities for general purpose logic integration. It is comprised of eight 36V18 Function Blocks, providing 2,400 usable gates with propagation delays of 7.5 ns. See Figure 2 for the architecture overview.

Power Management

Power dissipation can be reduced in the XC95108 by configuring macrocells to standard or low-power modes of operation. Unused macrocells are turned off to minimize power dissipation.

Operating current for each design can be approximated for specific operating conditions using the following equation:

I_{CC} (mA) = MC_{HP} (1.7) + MC_{LP} (0.9) + MC (0.006 mA/MHz) f

Where:

MC_{HP} = Macrocells in high-performance mode

MC_{LP} = Macrocells in low-power mode

MC = Total number of macrocells used

f = Clock frequency (MHz)

Figure 1 shows a typical calculation for the XC95108 device.

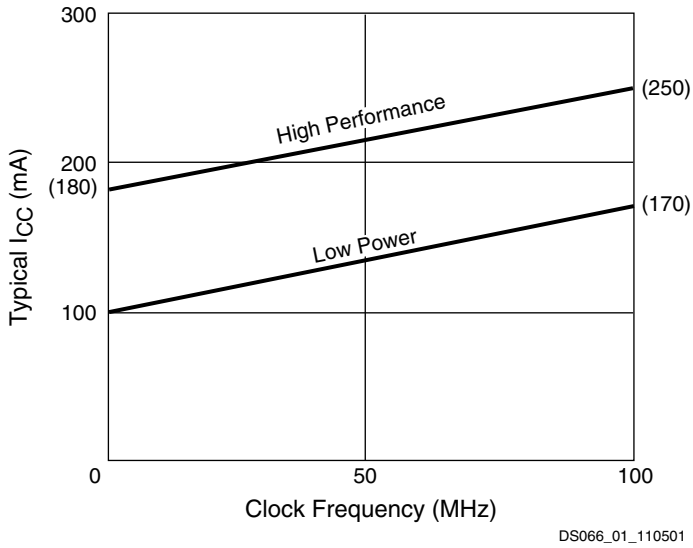

Figure 1: **Typical I_{CC} vs. Frequency for XC95108**

© 1998, 2003–2006, 2013 Xilinx, Inc. All rights reserved. All Xilinx trademarks, registered trademarks, patents, and disclaimers are as listed at http://www.xilinx.com/legal.htm. All other trademarks and registered trademarks are the property of their respective owners. All specifications are subject to change without notice.

PRODUCT OBSOLETE / UNDER OBSOLESCENCE
XC95108-7PC84C Xilinx Inc. IC CPLD 108MC 7.5NS 84PLCC

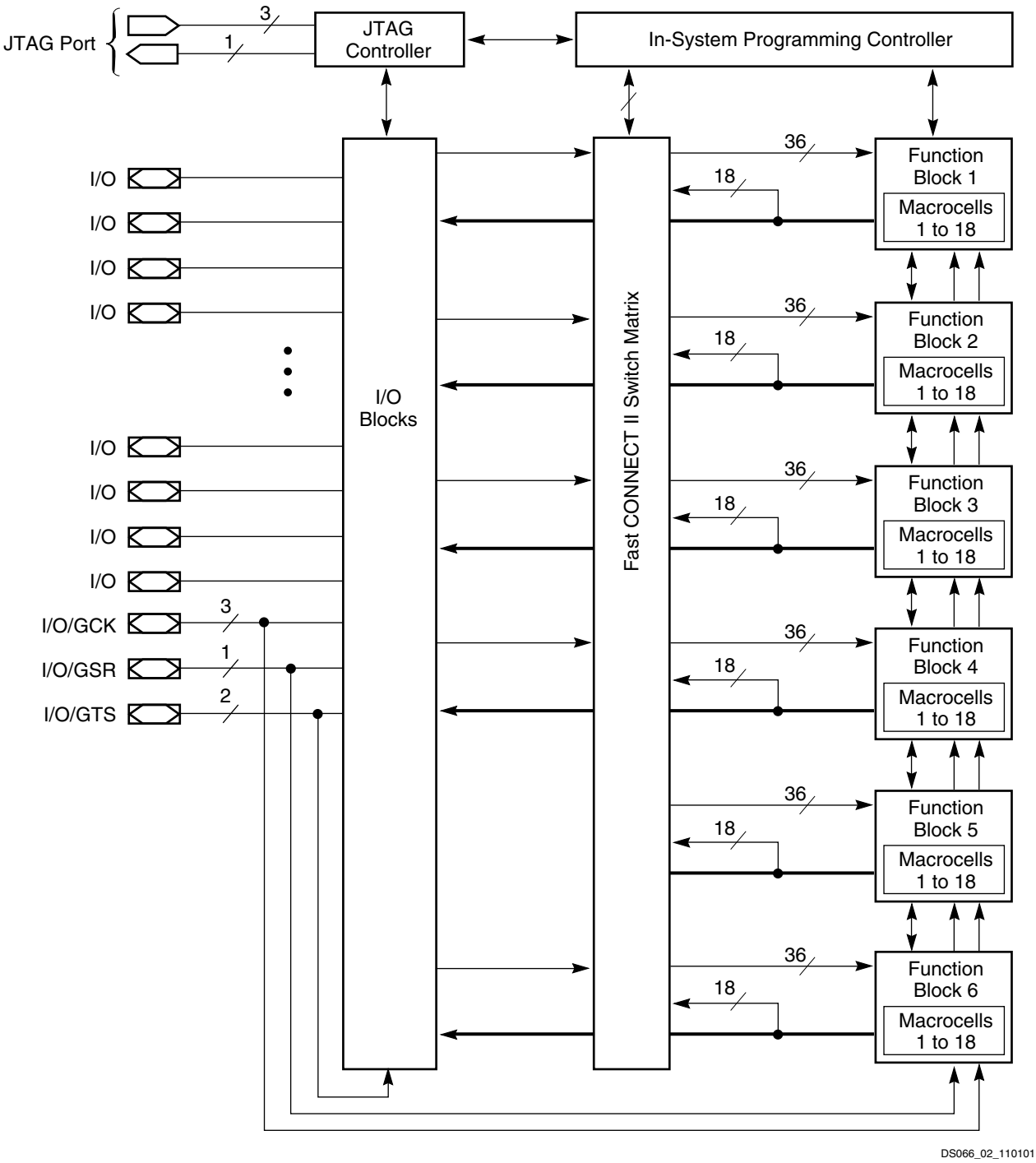

Figure 2: **XC95108 Architecture**
Function block outputs (indicated by the bold line) drive the I/O blocks directly.

PRODUCT OBSOLETE / UNDER OBSOLESCENCE
XC95108-7PC84C Xilinx Inc. IC CPLD 108MC 7.5NS 84PLCC

Absolute Maximum Ratings

Symbol	Description	Value	Units
V_{CC}	Supply voltage relative to GND	–0.5 to 7.0	V
V_{IN}	Input voltage relative to GND	–0.5 to V_{CC} + 0.5	V
V_{TS}	Voltage applied to 3-state output	–0.5 to V_{CC} + 0.5	V
T_{STG}	Storage temperature (ambient)	–65 to +150	ºC
T_J	Junction temperature	+150	ºC

Notes:
1. Stresses beyond those listed under Absolute Maximum Ratings may cause permanent damage to the device. These are stress ratings only, and functional operation of the device at these or any other conditions beyond those listed under Operating Conditions is not implied. Exposure to Absolute Maximum Ratings conditions for extended periods of time may affect device reliability.

Recommended Operation Conditions

Symbol	Parameter		Min	Max	Units
V_{CCINT}	Supply voltage for internal logic and input buffers	Commercial T_A = 0ºC to 70ºC	4.75	5.25	V
		Industrial T_A = –40ºC to +85ºC	4.5	5.5	
V_{CCIO}	Supply voltage for output drivers for 5V operation	Commercial T_A = 0ºC to 70ºC	4.75	5.25	V
		Industrial T_A = –40ºC to +85ºC	4.5	5.5	
	Supply voltage for output drivers for 3.3V operation		3.0	3.6	
V_{IL}	Low-level input voltage		0	0.80	V
V_{IH}	High-level input voltage		2.0	V_{CCINT} + 0.5	V
V_O	Output voltage		0	V_{CCIO}	V

Quality and Reliability Characteristics

Symbol	Parameter	Min	Max	Units
T_{DR}	Data Retention	20	-	Years
N_{PE}	Program/Erase Cycles (Endurance)	10,000	-	Cycles

DC Characteristic Over Recommended Operating Conditions

Symbol	Parameter	Test Conditions	Min	Max	Units
V_{OH}	Output high voltage for 5V outputs	I_{OH} = –4.0 mA, V_{CC} = Min	2.4	-	V
	Output high voltage for 3.3V outputs	I_{OH} = –3.2 mA, V_{CC} = Min	2.4	-	V
V_{OL}	Output low voltage for 5V outputs	I_{OL} = 24 mA, V_{CC} = Min	-	0.5	V
	Output low voltage for 3.3V outputs	I_{OL} = 10 mA, V_{CC} = Min	-	0.4	V
I_{IL}	Input leakage current	V_{CC} = Max V_{IN} = GND or V_{CC}	-	±10	µA
I_{IH}	I/O high-Z leakage current	V_{CC} = Max V_{IN} = GND or V_{CC}	-	±10	µA
C_{IN}	I/O capacitance	V_{IN} = GND f = 1.0 MHz	-	10	pF
I_{CC}	Operating supply current (low power mode, active)	V_I = GND, No load f = 1.0 MHz	100 (Typical)		mA

PRODUCT OBSOLETE / UNDER OBSOLESCENCE
XC95108-7PC84C Xilinx Inc. IC CPLD 108MC 7.5NS 84PLCC

AC Characteristics

Symbol	Parameter	XC95108-7		XC95108-10		XC95108-15		XC95108-20		Units
		Min	Max	Min	Max	Min	Max	Min	Max	
T_{PD}	I/O to output valid	-	7.5	-	10.0	-	15.0	-	20.0	ns
T_{SU}	I/O setup time before GCK	4.5	-	6.0	-	8.0	-	10.0	-	ns
T_H	I/O hold time after GCK	0	-	0	-	0	-	0	-	ns
T_{CO}	GCK to output valid	-	4.5	-	6.0	-	8.0	-	10.0	ns
f_{CNT}(1)	16-bit counter frequency	125.0	-	111.1	-	95.2	-	83.3	-	MHz
f_{SYSTEM}(2)	Multiple FB internal operating frequency	83.3	-	66.7	-	55.6	-	50.0	-	MHz
T_{PSU}	I/O setup time before p-term clock input	0.5	-	2.0	-	4.0	-	4.0	-	ns
T_{PH}	I/O hold time after p-term clock input	4.0	-	4.0	-	4.0	-	6.0	-	ns
T_{PCO}	P-term clock output valid	-	8.5	-	10.0	-	12.0	-	16.0	ns
T_{OE}	GTS to output valid	-	5.5	-	6.0	-	11.0	-	16.0	ns
T_{OD}	GTS to output disable	-	5.5	-	6.0	-	11.0	-	16.0	ns
T_{POE}	Product term OE to output enabled	-	9.5	-	10.0	-	14.0	-	18.0	ns
T_{POD}	Product term OE to output disabled	-	9.5	-	10.0	-	14.0	-	18.0	ns
T_{WLH}	GCK pulse width (High or Low)	4.0	-	4.5	-	5.5	-	5.5	-	ns
T_{APRPW}	Asynchronous preset/reset pulse width (High or Low)	7.0	-	7.5	-	8.0	-	8.0	-	ns

Notes:

1. f_{CNT} is the fastest 16-bit counter frequency available, using the local feedback when applicable. f_{CNT} is also the Export Control Maximum flip-flop toggle rate, f_{TOG}.
2. f_{SYSTEM} is the internal operating frequency for general purpose system designs spanning multiple FBs.

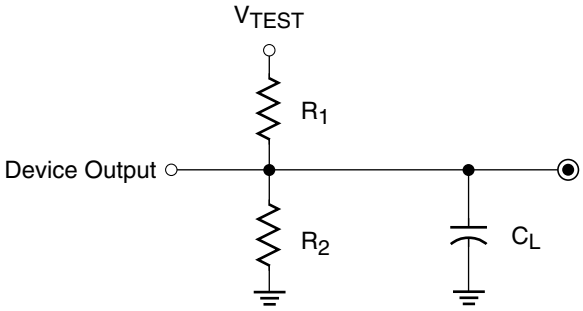

Output Type	V_{CCIO}	V_{TEST}	R_1	R_2	C_L
	5.0V	5.0V	160Ω	120Ω	35 pF
	3.3V	3.3V	260Ω	360Ω	35 pF

DS067_03_110101

Figure 3: **AC Load Circuit**

PRODUCT OBSOLETE / UNDER OBSOLESCENCE
XC95108-7PC84C Xilinx Inc. IC CPLD 108MC 7.5NS 84PLCC

Internal Timing Parameters

Symbol	Parameter	XC95108-7		XC95108-10		XC95108-15		XC95108-20		Units
		Min	Max	Min	Max	Min	Max	Min	Max	
Buffer Delays										
T_{IN}	Input buffer delay	-	2.5	-	3.5	-	4.5	-	6.5	ns
T_{GCK}	GCK buffer delay	-	1.5	-	2.5	-	3.0	-	3.0	ns
T_{GSR}	GSR buffer delay	-	4.5	-	6.0	-	7.5	-	9.5	ns
T_{GTS}	GTS buffer delay	-	5.5	-	6.0	-	11.0	-	16.0	ns
T_{OUT}	Output buffer delay	-	2.5	-	3.0	-	4.5	-	6.5	ns
T_{EN}	Output buffer enable/disable delay	-	0	-	0	-	0	-	0	ns
Product Term Control Delays										
T_{PTCK}	Product term clock delay	-	3.0	-	3.0	-	2.5	-	2.5	ns
T_{PTSR}	Product term set/reset delay	-	2.0	-	2.5	-	3.0	-	3.0	ns
T_{PTTS}	Product term 3-state delay	-	4.5	-	3.5	-	5.0	-	5.0	ns
Internal Register and Combinatorial Delays										
T_{PDI}	Combinatorial logic propagation delay	-	0.5	-	1.0	-	3.0	-	4.0	ns
T_{SUI}	Register setup time	1.5	-	2.5	-	3.5	-	3.5	-	ns
T_{HI}	Register hold time	3.0	-	3.5	-	4.5	-	6.5	-	ns
T_{COI}	Register clock to output valid time	-	0.5	-	0.5	-	0.5	-	0.5	ns
T_{AOI}	Register async. S/R to output delay	-	6.5	-	7.0	-	8.0	-	8.0	ns
T_{RAI}	Register async. S/R recover before clock	7.5	-	10.0	-	10.0	-	10.0	-	ns
T_{LOGI}	Internal logic delay	-	2.0	-	2.5	-	3.0	-	3.0	ns
T_{LOGILP}	Internal low power logic delay	-	10.0	-	11.0	-	11.5	-	11.5	ns
Feedback Delays										
T_F	FastCONNECT feedback delay	-	8.0	-	9.5	-	11.0	-	13.0	ns
T_{LF}	Function block local feedback delay	-	4.0	-	3.5	-	3.5	-	5.0	ns
Time Adders										
T_{PTA}(1)	Incremental product term allocator delay	-	1.0	-	1.0	-	1.0	-	1.5	ns
T_{SLEW}	Slew-rate limited delay	-	4.0	-	4.5	-	5.0	-	5.5	ns

Notes:
1. T_{PTA} is multiplied by the span of the function as defined in the XC9500 family data sheet.

PRODUCT OBSOLETE / UNDER OBSOLESCENCE
XC95108-7PC84C Xilinx Inc. IC CPLD 108MC 7.5NS 84PLCC

XC95108 I/O Pins

Function Block	Macro-cell	PC84	PQ100	TQ100	PQ160	BScan Order	Function Block	Macro-cell	PC84	PQ100	TQ100	PQ160	BScan Order
1	1	–	–	–	25	321	3	1	–	–	–	45	213
1	2	1	15	13	21	318	3	2	14	31	29	47	210
1	3	2	16	14	22	315	3	3	15	32	30	49	207
1	4	–	21	19	29	312	3	4	–	36	34	57	204
1	5	3	17	15	23	309	3	5	17	34	32	54	201
1	6	4	18	16	24	306	3	6	18	35	33	56	198
1	7	–	–	–	27	303	3	7	–	–	–	50	195
1	8	5	19	17	26	300	3	8	19	37	35	58	192
1	9	6	20	18	28	297	3	9	20	38	36	59	189
1	10	–	26	24	36	294	3	10	–	45	43	69	186
1	11	7	22	20	30	291	3	11	21	39	37	60	183
1	12	9[1]	24[1]	22[1]	33[1]	288[1]	3	12	23	41	39	62	180
1	13	–	–	–	34	285	3	13	–	–	–	52	177
1	14	10[1]	25[1]	23[1]	35[1]	282[1]	3	14	24	42	40	63	174
1	15	11	27	25	37	279	3	15	25	43	41	64	171
1	16	12[1]	29[1]	27[1]	42[1]	276[1]	3	16	26	44	42	68	168
1	17	13	30	28	44	273	3	17	31	51	49	77	165
1	18	–	–	–	43	270	3	18	–	–	–	74	162
2	1	–	–	–	158	267	4	1	–	–	–	123	159
2	2	71	98	96	154	264	4	2	57	83	81	134	156
2	3	72	99	97	156	261	4	3	58	84	82	135	153
2	4	–	4	2	4	258	4	4	–	82	80	133	150
2	5	74[1]	1[1]	99[1]	159[1]	255[1]	4	5	61	87	85	138	147
2	6	75	3	1	2	252	4	6	62	88	86	139	144
2	7	–	–	–	9	249	4	7	–	–	–	128	141
2	8	76[1]	5[1]	3[1]	6[1]	246[1]	4	8	63	89	87	140	138
2	9	77[1]	6[1]	4[1]	8[1]	243[1]	4	9	65	91	89	142	135
2	10	–	9	7	12	240	4	10	–	–	–	147	132
2	11	79	8	6	11	237	4	11	66	92	90	143	129
2	12	80	10	8	13	234	4	12	67	93	91	144	126
2	13	–	–	–	14	231	4	13	–	–	–	153	123
2	14	81	11	9	15	228	4	14	68	95	93	146	120
2	15	82	12	10	17	225	4	15	69	96	94	148	117
2	16	83	13	11	18	222	4	16	–	94	92	145	114
2	17	84	14	12	19	219	4	17	70	97	95	152	111
2	18	–	–	–	16	216	4	18	–	–	–	155	108

Notes:
1. Global control pin.

PRODUCT OBSOLETE / UNDER OBSOLESCENCE
XC95108-7PC84C Xilinx Inc. IC CPLD 108MC 7.5NS 84PLCC

XC95108 I/O Pins *(Continued)*

Function Block	Macro-cell	PC84	PQ100	TQ100	PQ160	BScan Order	Function Block	Macro-cell	PC84	PQ100	TQ100	PQ160	BScan Order
5	1	–	–	–	76	105	6	1	–	–	–	91	51
5	2	32	52	50	79	102	6	2	45	67	65	103	48
5	3	33	54	52	82	99	6	3	46	68	66	104	45
5	4	–	48	46	72	96	6	4	–	75	73	116	42
5	5	34	55	53	86	93	6	5	47	69	67	106	39
5	6	35	56	54	88	90	6	6	48	70	68	108	36
5	7	–	–	–	78	87	6	7	–	–	–	105	33
5	8	36	57	55	90	84	6	8	50	72	70	111	30
5	9	37	58	56	92	81	6	9	51	73	71	113	27
5	10	–	–	–	84	78	6	10	–	–	–	107	24
5	11	39	60	58	95	75	6	11	52	74	72	115	21
5	12	40	62	60	97	72	6	12	53	76	74	117	18
5	13	–	–	–	87	69	6	13	–	–	–	112	15
5	14	41	63	61	98	66	6	14	54	78	76	122	12
5	15	43	65	63	101	63	6	15	55	79	77	124	9
5	16	–	61	59	96	60	6	16	–	81	79	129	6
5	17	44	66	64	102	57	6	17	56	80	78	126	3
5	18	–	–	–	89	54	6	18	–	–	–	114	0

XC95108 Global, JTAG, and Power Pins

Pin Type	PC84	PQ100	TQ100	PQ160
I/O/GCK1	9	24	22	33
I/O/GCK2	10	25	23	35
I/O/GCK3	12	29	27	42
I/O/GTS1	76	5	3	6
I/O/GTS2	77	6	4	8
I/O/GSR	74	1	99	159
TCK	30	50	48	75
TDI	28	47	45	71
TDO	59	85	83	136
TMS	29	49	47	73
V_{CCINT} 5V	38,73,78	7,59,100	5,57,98	10,46,94,157
V_{CCIO} 3.3V/5V	22,64	28,40,53,90	26,38,51,88	1,41,61,81,121,141
GND	8,16,27,42,49,60	2,23,33,46,64,71,77,86	100,21,31,44,62,69,75,84	20,31,40,51,70,80,99
GND	–	–	–	100,110,120,127,137
GND	–	–	–	160
No connects	–	–	–	3,5,7,32,38,39,48,53,55,65,66,67,83,85,93,109,118,119,125,130,131,132,149,150,151

PRODUCT OBSOLETE / UNDER OBSOLESCENCE
XC95108-7PC84C Xilinx Inc. IC CPLD 108MC 7.5NS 84PLCC

Device Part Marking and Ordering Combination Information

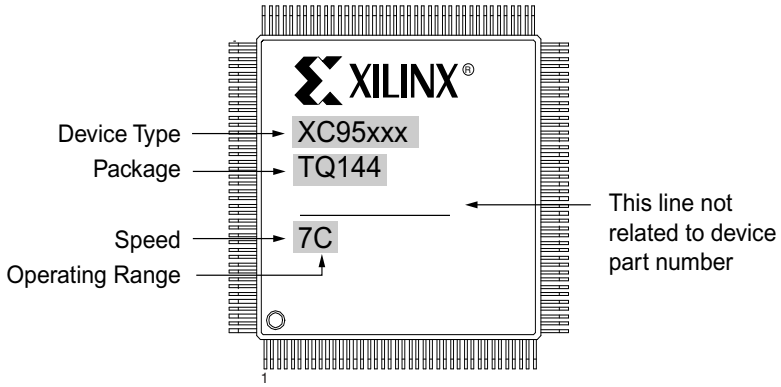

Sample package with part marking.

Device Ordering and Part Marking Number	Speed (pin-to-pin delay)	Pkg. Symbol	No. of Pins	Package Type	Operating Range(1)
XC95108-7PC84C	7.5 ns	PC84	84-pin	Plastic Lead Chip Carrier (PLCC)	C
XC95108-7PCG84C	7.5 ns	PGC84	84-pin	Plastic Lead Chip Carrier (PLCC); Pb-Free	C
XC95108-7PQ100C	7.5 ns	PQ100	100-pin	Plastic Quad Flat Pack (PQFP)	C
XC95108-7PQG100C	7.5 ns	PQG100	100-pin	Plastic Quad Flat Pack (PQFP); Pb-Free	C
XC95108-7TQ100C	7.5 ns	TQ100	100-pin	Thin Quad Flat Pack (TQFP)	C
XC95108-7TQG100C	7.5 ns	TQG100	100-pin	Thin Quad Flat Pack (TQFP); Pb-Free	C
XC95108-7PQ160C	7.5 ns	PQ160	160-pin	Plastic Quad Flat Pack (PQFP)	C
XC95108-7PQG160C	7.5 ns	PQG160	160-pin	Plastic Quad Flat Pack (PQFP); Pb-Free	C
XC95108-7PC84I	7.5 ns	PC84	84-pin	Plastic Lead Chip Carrier (PLCC)	I
XC95108-7PCG84I	7.5 ns	PCG84	84-pin	Plastic Lead Chip Carrier (PLCC); Pb-Free	I
XC95108-7PQ100I	7.5 ns	PQ100	100-pin	Plastic Quad Flat Pack (PQFP)	I
XC95108-7PQG100I	7.5 ns	PQG100	100-pin	Plastic Quad Flat Pack (PQFP); Pb-Free	I
XC95108-7TQ100I	7.5 ns	TQ100	100-pin	Thin Quad Flat Pack (TQFP)	I
XC95108-7TQG100I	7.5 ns	TQG100	100-pin	Thin Quad Flat Pack (TQFP); Pb-Free	I
XC95108-7PQ160I	7.5 ns	PQ160	160-pin	Plastic Quad Flat Pack (PQFP)	I
XC95108-7PQG160I	7.5 ns	PQG160	160-pin	Plastic Quad Flat Pack (PQFP); Pb-Free	I
XC95108-10PC84C	10 ns	PC84	84-pin	Plastic Lead Chip Carrier (PLCC)	C
XC95108-10PCG84C	10 ns	PCG84	84-pin	Plastic Lead Chip Carrier (PLCC); Pb-Free	C
XC95108-10PQ100C	10 ns	PQ100	100-pin	Plastic Quad Flat Pack (PQFP)	C
XC95108-10PQG100C	10 ns	PQG100	100-pin	Plastic Quad Flat Pack (PQFP); Pb-Free	C
XC95108-10TQ100C	10 ns	TQ100	100-pin	Thin Quad Flat Pack (TQFP)	C
XC95108-10TQG100C	10 ns	TQG100	100-pin	Thin Quad Flat Pack (TQFP); Pb-Free	C
XC95108-10PQ160C	10 ns	PQ160	160-pin	Plastic Quad Flat Pack (PQFP)	C
XC95108-10PQG160C	10 ns	PQG160	160-pin	Plastic Quad Flat Pack (PQFP); Pb-Free	C
XC95108-10PC84I	10 ns	PC84	84-pin	Plastic Lead Chip Carrier (PLCC)	I
XC95108-10PCG84I	10 ns	PCG84	84-pin	Plastic Lead Chip Carrier (PLCC); Pb-Free	I
XC95108-10PQ100I	10 ns	PQ100	100-pin	Plastic Quad Flat Pack (PQFP)	I
XC95108-10PQG100I	10 ns	PQG100	100-pin	Plastic Quad Flat Pack (PQFP); Pb-Free	I
XC95108-10TQ100I	10 ns	TQ100	100-pin	Thin Quad Flat Pack (TQFP)	I
XC95108-10TQG100I	10 ns	TQG100	100-pin	Thin Quad Flat Pack (TQFP); Pb-Free	I
XC95108-10PQ160I	10 ns	PQ160	160-pin	Plastic Quad Flat Pack (PQFP)	I
XC95108-10PQG160I	10 ns	PQG160	160-pin	Plastic Quad Flat Pack (PQFP); Pb-Free	I
XC95108-15PC84C	15 ns	PC84	84-pin	Plastic Lead Chip Carrier (PLCC)	C

PRODUCT OBSOLETE / UNDER OBSOLESCENCE
XC95108-7PC84C Xilinx Inc. IC CPLD 108MC 7.5NS 84PLCC

Device Ordering and Part Marking Number	Speed (pin-to-pin delay)	Pkg. Symbol	No. of Pins	Package Type	Operating Range(1)
XC95108-15PCG84C	15 ns	PCG84	84-pin	Plastic Lead Chip Carrier (PLCC); Pb-Free	C
XC95108-15PQ100C	15 ns	PQ100	100-pin	Plastic Quad Flat Pack (PQFP)	C
XC95108-15PQG100C	15 ns	PQG100	100-pin	Plastic Quad Flat Pack (PQFP); Pb-Free	C
XC95108-15TQ100C	15 ns	TQ100	100-pin	Thin Quad Flat Pack (TQFP)	C
XC95108-15TQG100C	15 ns	TQG100	100-pin	Thin Quad Flat Pack (TQFP); Pb-Free	C
XC95108-15PQ160C	15 ns	PQ160	160-pin	Plastic Quad Flat Pack (PQFP)	C
XC95108-15PQG160C	15 ns	PQG160	160-pin	Plastic Quad Flat Pack (PQFP); Pb-Free	C
XC95108-15PC84I	15 ns	PC84	84-pin	Plastic Lead Chip Carrier (PLCC)	I
XC95108-15PCG84I	15 ns	PCG84	84-pin	Plastic Lead Chip Carrier (PLCC); Pb-Free	I
XC95108-15PQ100I	15 ns	PQ100	100-pin	Plastic Quad Flat Pack (PQFP)	I
XC95108-15PQG100I	15 ns	PQG100	100-pin	Plastic Quad Flat Pack (PQFP); Pb-Free	I
XC95108-15TQ100I	15 ns	TQ100	100-pin	Thin Quad Flat Pack (TQFP)	I
XC95108-15TQG100I	15 ns	TQG100	100-pin	Thin Quad Flat Pack (TQFP); Pb-Free	I
XC95108-15PQ160I	15 ns	PQ160	160-pin	Plastic Quad Flat Pack (PQFP)	I
XC95108-15PQG160I	15 ns	PQG160	160-pin	Plastic Quad Flat Pack (PQFP); Pb-Free	I
XC95108-20PC84C	20 ns	PC84	84-pin	Plastic Lead Chip Carrier (PLCC)	C
XC95108-20PCG84C	20 ns	PCG84	84-pin	Plastic Lead Chip Carrier (PLCC); Pb-Free	C
XC95108-20PQ100C	20 ns	PQ100	100-pin	Plastic Quad Flat Pack (PQFP)	C
XC95108-20PQG100C	20 ns	PQG100	100-pin	Plastic Quad Flat Pack (PQFP); Pb-Free	C
XC95108-20TQ100C	20 ns	TQ100	100-pin	Thin Quad Flat Pack (TQFP)	C
XC95108-20TQG100C	20 ns	TQG100	100-pin	Thin Quad Flat Pack (TQFP); Pb-Free	C
XC95108-20PQ160C	20 ns	PQ160	160-pin	Plastic Quad Flat Pack (PQFP)	C
XC95108-20PQG160C	20 ns	PQG160	160-pin	Plastic Quad Flat Pack (PQFP); Pb-Free	C
XC95108-20PC84I	20 ns	PC84	84-pin	Plastic Lead Chip Carrier (PLCC)	I
XC95108-20PCG84I	20 ns	PCG84	84-pin	Plastic Lead Chip Carrier (PLCC); Pb-Free	I
XC95108-20PQ100I	20 ns	PQ100	100-pin	Plastic Quad Flat Pack (PQFP)	I
XC95108-20PQG100I	20 ns	PQG100	100-pin	Plastic Quad Flat Pack (PQFP); Pb-Free	I
XC95108-20TQ100I	20 ns	TQ100	100-pin	Thin Quad Flat Pack (TQFP)	I
XC95108-20TQG100I	20 ns	TQG100	100-pin	Thin Quad Flat Pack (TQFP); Pb-Free	I
XC95108-20PQ160I	20 ns	PQ160	160-pin	Plastic Quad Flat Pack (PQFP)	I
XC95108-20PQG160I	20 ns	PQG160	160-pin	Plastic Quad Flat Pack (PQFP); Pb-Free	I

Notes:
1. C = Commercial: T_A = 0° to +70°C; I = Industrial: T_A = –40° to +85°C

PRODUCT OBSOLETE / UNDER OBSOLESCENCE
XC95108-7PC84C Xilinx Inc. IC CPLD 108MC 7.5NS 84PLCC

Warranty Disclaimer

THESE PRODUCTS ARE SUBJECT TO THE TERMS OF THE XILINX LIMITED WARRANTY WHICH CAN BE VIEWED AT http://www.xilinx.com/warranty.htm. THIS LIMITED WARRANTY DOES NOT EXTEND TO ANY USE OF THE PRODUCTS IN AN APPLICATION OR ENVIRONMENT THAT IS NOT WITHIN THE SPECIFICATIONS STATED ON THE THEN-CURRENT XILINX DATA SHEET FOR THE PRODUCTS. PRODUCTS ARE NOT DESIGNED TO BE FAIL-SAFE AND ARE NOT WARRANTED FOR USE IN APPLICATIONS THAT POSE A RISK OF PHYSICAL HARM OR LOSS OF LIFE. USE OF PRODUCTS IN SUCH APPLICATIONS IS FULLY AT THE RISK OF CUSTOMER SUBJECT TO APPLICABLE LAWS AND REGULATIONS.

Revision History

The following table shows the revision history for this document.

Date	Version	Revision
12/04/1998	3.0	Update AC characteristics and internal parameters.
06/18/2003	4.0	Updated format.
08/21/2003	4.1	Updated Package Device Marking Pin 1 orientation.
03/01/2004	4.2	Updated table on page 8 for PQ160 pins.
04/15/2005	4.3	Added asynchronous preset/reset pulse width specification (T_{APRPW}).
04/03/2006	4.4	Added Warranty Disclaimer. Added Pb-Free package ordering information.
05/17/2013	5.0	The products listed in this data sheet are obsolete. See **XCN11010** for further information.

FPGAMALL
Authorized Distributor

OUR CERTIFICATE

A long-term cooperative relationship can be built between global customers and us by providing excellent products

Business Type	Trading Company, Distributor/Wholesaler
Main Products	Electronic Integrated Circuit
Certifications	ISO9001
Total Annual Revenue	US$2.5 Million - US$5 Million
Country / Region	Hongkong, China
Total Employees	100 - 200 People
Year Established	2018
Main Markets	North America South Asia Western Europe

sales@fpgamall.com
+00852-56428680