FPGAMALL
Authorized Distributor

https://www.fpgamall.com

THE DATASHEET OF FPGA

sales@fpgamall.com
+00852-56428680

XC95288XL High Performance CPLD

DS055 (v2.1 April 3, 2007

Product Specification

Features

- 6 ns pin-to-pin logic delays
- System frequency up to 208 MHz
- 288 macrocells with 6,400 usable gates
- Available in small footprint packages
  - 144-pin TQFP (117 user I/O pins)
  - 208-pin PQFP (168 user I/O pins)
  - 256-pin BGA (192 user I/O pins)
  - 256-pin FBGA (192 user I/O pins)
  - 280-pin CSP (192 user I/O pins)
  - Pb-free available for all packages
- Optimized for high-performance 3.3V systems
  - Low power operation
  - 5V tolerant I/O pins accept 5V, 3.3V, and 2.5V signals
  - 3.3V or 2.5V output capability
  - Advanced 0.35 micron feature size CMOS Fast FLASH™ technology
- Advanced system features
  - In-system programmable
  - Superior pin-locking and routability with Fast CONNECT™ II switch matrix
  - Extra wide 54-input Function Blocks
  - Up to 90 product-terms per macrocell with individual product-term allocation
  - Local clock inversion with three global and one product-term clocks
  - Individual output enable per output pin with local inversion
  - Input hysteresis on all user and boundary-scan pin inputs
  - Bus-hold circuitry on all user pin inputs
  - Full IEEE Standard 1149.1 boundary-scan (JTAG)
- Fast concurrent programming
- Slew rate control on individual outputs
- Enhanced data security features
- Excellent quality and reliability
  - Endurance exceeding 10,000 program/erase cycles
  - 20 year data retention
  - ESD protection exceeding 2,000V
- Pin-compatible with 5V-core XC95288 device in the 208-pin HQFP package

WARNING: Programming temperature range of T_A = 0° C to +70° C

Description

The XC95288XL is a 3.3V CPLD targeted for high-performance, low-voltage applications in leading-edge communications and computing systems. It is comprised of 16 54V18 Function Blocks, providing 6,400 usable gates with propagation delays of 6 ns. See Figure 2 for architecture overview.

Power Estimation

Power dissipation in CPLDs can vary substantially depending on the system frequency, design application and output loading. To help reduce power dissipation, each macrocell in a XC9500XL device may be configured for low-power mode (from the default high-performance mode). In addition, unused product-terms and macrocells are automatically deactivated by the software to further conserve power.

For a general estimate of I_{CC}, the following equation may be used:

$$I_{CC}(mA) = MC_{HS}(0.175*PT_{HS} + 0.345) + MC_{LP}(0.052*PT_{LP} + 0.272) + 0.04 * MC_{TOG}(MC_{HS} + MC_{LP})* f$$

where:

MC_{HS} = # macrocells in high-speed configuration
PT_{HS} = average number of high-speed product terms per macrocell
MC_{LP} = # macrocells in low power configuration
PT_{LP} = average number of low power product terms per macrocell
f = maximum clock frequency
MCTOG = average % of flip-flops toggling per clock (~12%)

This calculation was derived from laboratory measurements of an XC9500XL part filled with 16-bit counters and allowing a single output (the LSB) to be enabled. The actual I_{CC} value varies with the design application and should be verified during normal system operation. Figure 1 shows the above estimation in a graphical form. For a more detailed discussion of power consumption in this device, see Xilinx

© 1998-2007 Xilinx, Inc. All rights reserved. All Xilinx trademarks, registered trademarks, patents, and disclaimers are as listed at http://www.xilinx.com/legal.htm. All other trademarks and registered trademarks are the property of their respective owners. All specifications are subject to change without notice.

application note **XAPP114, "Understanding XC9500XL CPLD Power."**

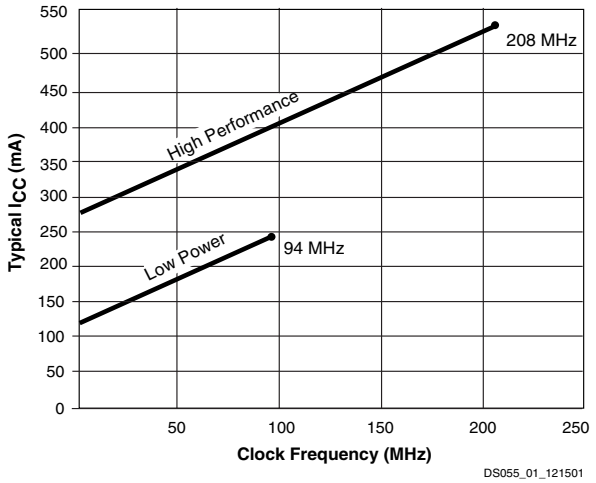

Figure 1: **Typical I_{CC} vs. Frequency for XC95288XL**

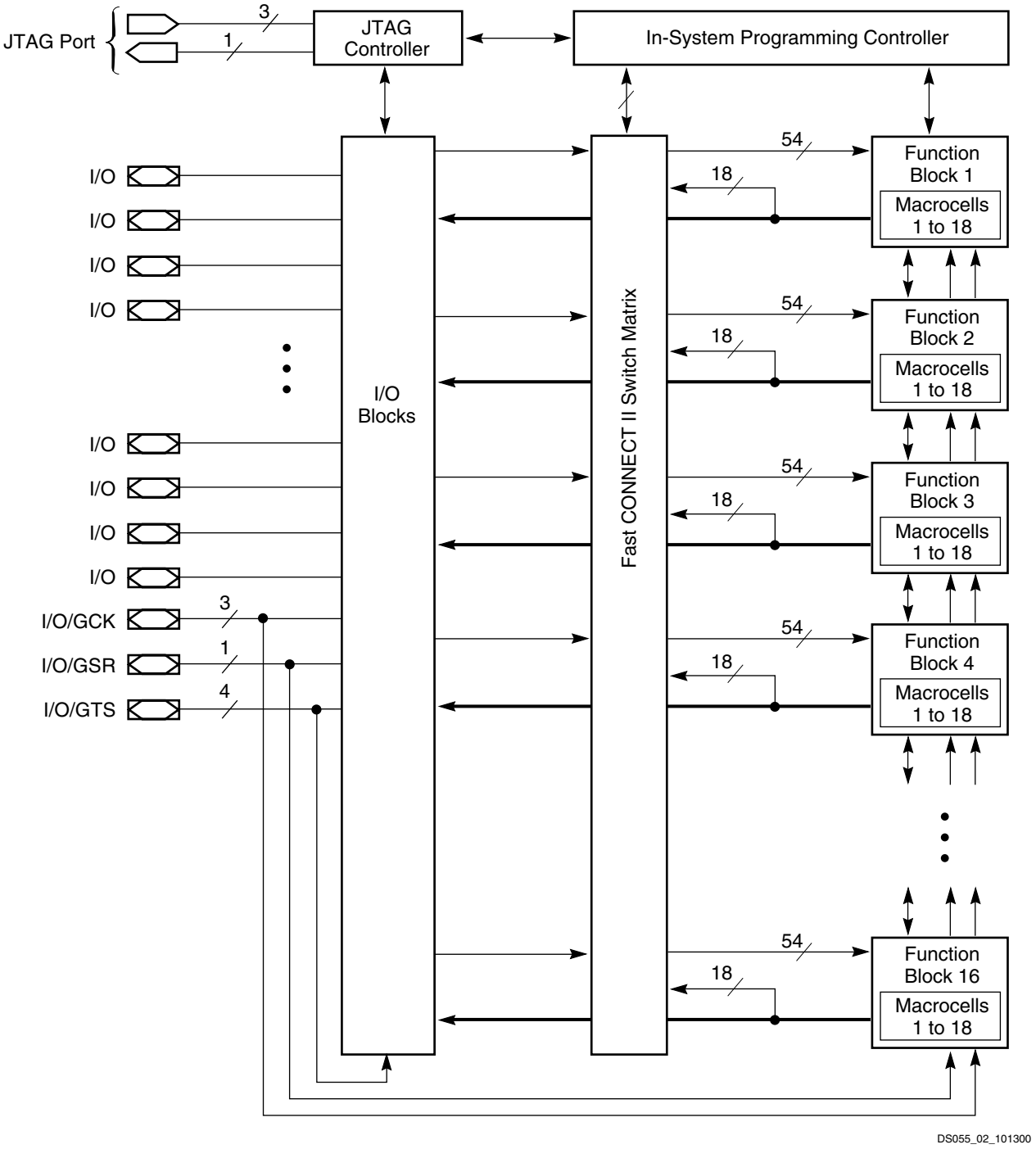

Figure 2: **XC95288XL Architecture**
Function Block outputs (indicated by the bold line) drive the I/O Blocks directly.

Absolute Maximum Ratings(2)

Symbol	Description	Value	Units
V_{CC}	Supply voltage relative to GND	–0.5 to 4.0	V
V_{IN}	Input voltage relative to GND(1)	–0.5 to 5.5	V
V_{TS}	Voltage applied to 3-state output(1)	–0.5 to 5.5	V
T_{STG}	Storage temperature (ambient)(3)	–65 to +150	ºC
T_J	Junction temperature	+150	ºC

Notes:
1. Maximum DC undershoot below GND must be limited to either 0.5V or 10 mA, whichever is easier to achieve. During transitions, the device pins may undershoot to –2.0V or overshoot to +7.0V, provided this over- or undershoot lasts less than 10 ns and with the forcing current being limited to 200 mA. External I/O voltage may not exceed V_{CCINT} by 4.0V.
2. Stresses beyond those listed under Absolute Maximum Ratings may cause permanent damage to the device. These are stress ratings only, and functional operation of the device at these or any other conditions beyond those listed under Operating Conditions is not implied. Exposure to Absolute Maximum Ratings conditions for extended periods of time may affect device reliability.
3. For soldering guidelines and thermal considerations, see the Device Packaging information on the Xilinx website. For Pb-free packages, see XAPP427.

Recommended Operation Conditions

Symbol	Parameter		Min	Max	Units
V_{CCINT}	Supply voltage for internal logic and input buffers	Commercial T_A = 0ºC to 70ºC	3.0	3.6	V
		Industrial T_A = –40ºC to +85ºC	3.0	3.6	V
V_{CCIO}	Supply voltage for output drivers for 3.3V operation		3.0	3.6	V
	Supply voltage for output drivers for 2.5V operation		2.3	2.7	V
V_{IL}	Low-level input voltage		0	0.80	V
V_{IH}	High-level input voltage		2.0	5.5	V
V_O	Output voltage		0	V_{CCIO}	V

Quality and Reliability Characteristics

Symbol	Parameter	Min	Max	Units
T_{DR}	Data Retention	20	-	Years
N_{PE}	Program/Erase Cycles (Endurance)	10,000	-	Cycles
V_{ESD}	Electrostatic Discharge (ESD)	2,000	-	Volts

DC Characteristic Over Recommended Operating Conditions

Symbol	Parameter	Test Conditions	Min	Max	Units
V_{OH}	Output high voltage for 3.3V outputs	I_{OH} = –4.0 mA	2.4	-	V
	Output high voltage for 2.5V outputs	I_{OH} = –500 µA	90% V_{CCIO}	-	V
V_{OL}	Output low voltage for 3.3V outputs	I_{OL} = 8.0 mA	-	0.4	V
	Output low voltage for 2.5V outputs	I_{OL} = 500 µA	-	0.4	V
I_{IL}	Input leakage current	V_{CC} = Max; V_{IN} = GND or V_{CC}	-	±10	µA
I_{IH}	I/O high-Z leakage current	V_{CC} = Max; V_{IN} = GND or V_{CC}	-	±10	µA
I_{IH}	I/O high-Z leakage current	V_{CC} = Max; V_{CCIO} = Max; V_{IN} = GND or 3.6V	-	±10	µA
		V_{CC} Min < V_{IN} < 5.5V	-	±50	µA
C_{IN}	I/O capacitance	V_{IN} = GND; f = 1.0 MHz	-	10	pF
I_{CC}	Operating supply current (low power mode, active)	V_{IN} = GND, No load; f = 1.0 MHz	85 (Typical)		mA

AC Characteristics

Symbol	Parameter	XC95288XL-6		XC95288XL-7		XC95288XL-10		Units
		Min	Max	Min	Max	Min	Max	
T_{PD}	I/O to output valid	-	6.0	-	7.5	-	10.0	ns
T_{SU}	I/O setup time before GCK	4.0	-	4.8	-	6.5	-	ns
T_H	I/O hold time after GCK	0	-	0	-	0	-	ns
T_{CO}	GCK to output valid	-	3.8	-	4.5	-	5.8	ns
f_{SYSTEM}	Multiple FB internal operating frequency	-	208.3	-	125.0	-	100.0	MHz
T_{PSU}	I/O setup time before p-term clock input	1.0	-	1.6	-	2.1	-	ns
T_{PH}	I/O hold time after p-term clock input	2.6	-	3.2	-	4.4	-	ns
T_{PCO}	P-term clock output valid	-	6.8	-	7.7	-	10.2	ns
T_{OE}	GTS to output valid	-	4.5	-	5.0	-	7.0	ns
T_{OD}	GTS to output disable	-	4.5	-	5.0	-	7.0	ns
T_{POE}	Product term OE to output enabled	-	8.4	-	9.5	-	11.0	ns
T_{POD}	Product term OE to output disabled	-	8.4	-	9.5	-	11.0	ns
T_{AO}	GSR to output valid	-	10.8	-	12.0	-	14.5	ns
T_{PAO}	P-term S/R to output valid	-	11.8	-	12.6	-	15.3	ns
T_{WLH}	GCK pulse width (High or Low)	2.4	-	4.0	-	4.5	-	ns
T_{APRPW}	Asynchronous preset/reset pulse width (High or Low)	6.0	-	6.5	-	7.0	-	ns
T_{PLH}	P-term clock pulse width (High or Low)	6.0	-	6.5	-	7.0	-	ns

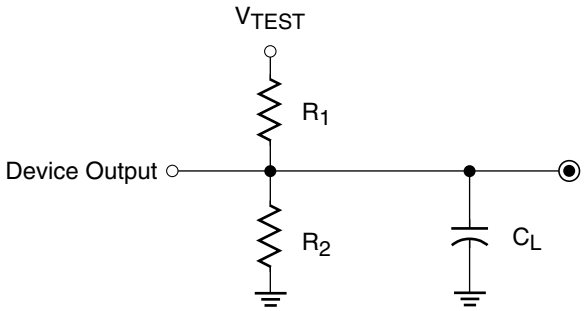

Output Type	V_{CCIO}	V_{TEST}	R_1	R_2	C_L
	3.3V	3.3V	320 Ω	360 Ω	35 pF
	2.5V	2.5V	250 Ω	660 Ω	35 pF

DS058_03_081500

Figure 3: **AC Load Circuit**

Internal Timing Parameters

Symbol	Parameter	XC95288XL-6		XC95288XL-7		XC95288XL-10		Units
		Min	Max	Min	Max	Min	Max	
Buffer Delays								
T_{IN}	Input buffer delay	-	2.2	-	2.3	-	3.5	ns
T_{GCK}	GCK buffer delay	-	1.2	-	1.5	-	1.8	ns
T_{GSR}	GSR buffer delay	-	2.2	-	3.1	-	4.5	ns
T_{GTS}	GTS buffer delay	-	4.5	-	5.0	-	7.0	ns
T_{OUT}	Output buffer delay	-	2.4	-	2.5	-	3.0	ns
T_{EN}	Output buffer enable/disable delay	-	0	-	0	-	0	ns
Product Term Control Delays								
T_{PTCK}	Product term clock delay	-	2.0	-	2.4	-	2.7	ns
T_{PTSR}	Product term set/reset delay	-	1.0	-	1.4	-	1.8	ns
T_{PTTS}	Product term 3-state delay	-	6.2	-	7.2	-	7.5	ns
Internal Register and Combinatorial Delays								
T_{PDI}	Combinatorial logic propagation delay	-	0.4	-	1.3	-	1.7	ns
T_{SUI}	Register setup time	2.0	-	2.6	-	3.0	-	ns
T_{HI}	Register hold time	1.6	-	2.2	-	3.5	-	ns
T_{ECSU}	Register clock enable setup time	2.0	-	2.6	-	3.0	-	ns
T_{ECHO}	Register clock enable hold time	1.6	-	2.2	-	3.5	-	ns
T_{COI}	Register clock to output valid time	-	0.2	-	0.5	-	1.0	ns
T_{AOI}	Register async. S/R to output delay	-	6.2	-	6.4	-	7.0	ns
T_{RAI}	Register async. S/R recover before clock	6.0		7.5		10.0		ns
T_{LOGI}	Internal logic delay	-	1.0	-	1.4	-	1.8	ns
T_{LOGILP}	Internal low power logic delay	-	5.5	-	6.4	-	7.3	ns
Feedback Delays								
T_F	Fast CONNECT II feedback delay	-	1.6	-	3.5	-	4.2	ns
Time Adders								
T_{PTA}	Incremental product term allocator delay (first incremental delay)	-	0.8	-	0.8	-	1.0	ns
T_{PTA2}	Incremental product term allocator delay (subsequent incremental delay)	-	0.3	-	0.3	-	0.4	ns
T_{SLEW}	Slew-rate limited delay	-	3.5	-	4.0	-	4.5	ns

XC95288XL I/O Pins [2]

Function Block	Macro cell	TQ144	PQ208	BG256	FG256	CS280	BScan Order	Function Block	Macro cell	TQ144	PQ208	BG256	FG256	CS280	BScan Order
1	1	–	–	–	–	–	861	3	1	–	–	–	–	–	753
1	2	–	28	L1	H1	K2	858	3	2	28	38	P1	L2	N2	750
1	3	–	29	L2	H5	K3	855	3	3	–	39	R1	L5	P1	747
1	4	–	–	–	–	–	852	3	4	–	–	–	–	–	744
1	5	20	30	L3	J1	K4	849	3	5	–	40	P3	M1	P2	741
1	6	21	31	L4	J5	L1	846	3	6	–	41	R2	L4	P3	738
1	7	–	–	–	–	–	843	3	7	–	–	–	–	–	735
1	8	22	32	M1	J2	L2	840	3	8	–	43	P4	N1	P4	732
1	9	–	–	M2	J3	L3	837	3	9	–	–	R3	L3	R1	729
1	10	23	33	M3	K1	L4	834	3	10	30[1]	44[1]	T2[1]	M2[1]	R3[1]	726
1	11	–	–	M4	J4	M1	831	3	11	–	–	U1	M4	R2	723
1	12	24	34	N1	K2	M2	828	3	12	31	45	T3	P1	R4	720
1	13	–	–	–	–	–	825	3	13	–	–	–	–	–	717
1	14	25	35	N2	K5	M3	822	3	14	32[1]	46[1]	U2[1]	M3[1]	T1[1]	714
1	15	26	36	N3	L1	M4	819	3	15	33	47	V1	N2	T2	711
1	16	–	–	–	–	–	816	3	16	–	–	–	–	–	708
1	17	27	37	N4	K3	N1	813	3	17	–	48	T4	N4	T3	705
1	18	–	–	–	–	–	810	3	18	–	–	–	–	–	702
2	1	–	–	–	–	–	807	4	1	–	–	–	–	–	699
2	2	9	15	G2	D1	G3	804	4	2	2[1]	3[1]	C2[1]	D3[1]	C2[1]	696
2	3	10	16	G1	G4	G2	801	4	3	–	4	D2	D2	B1	693
2	4	–	–	–	–	–	798	4	4	–	–	–	–	–	690
2	5	11	17	H4	E1	G1	795	4	5	3[1]	5[1]	D3[1]	E3[1]	C1[1]	687
2	6	12	18	H3	G3	G4	792	4	6	4	6	E4	C2	D4	684
2	7	–	–	–	–	–	789	4	7	–	–	–	–	–	681
2	8	13	19	H2	G2	H1	786	4	8	5[1]	7[1]	C1[1]	D4[1]	D3[1]	678
2	9	–	–	H1	F5	H3	783	4	9	–	–	D1	B1	D2	675
2	10	14	20	J4	F1	H2	780	4	10	–	8	E3	E4	D1	672
2	11	–	–	J3	G5	H4	777	4	11	–	–	E2	C1	E3	669
2	12	15	21	J2	H2	J1	774	4	12	6[1]	9[1]	E1[1]	E5[1]	E2[1]	666
2	13	–	–	–	–	–	771	4	13	–	–	–	–	–	663
2	14	16	22	J1	H4	J2	768	4	14	7	10	F3	E2	E4	660
2	15	17	23	K2	G1	J3	765	4	15	–	12	F2	F2	F3	657
2	16	–	–	–	–	–	762	4	16	–	–	–	–	–	654
2	17	19	25	K1	H3	J4	759	4	17	–	14	G3	E6	F4	651
2	18	–	–	–	–	–	756	4	18	–	–	–	–	–	648

Notes:
1. Global control pin.
2. The pin-outs are the same for Pb-free versions of packages.

XC95288XL I/O Pins *(Continued)*[2]

Function Block	Macro cell	TQ144	PQ208	BG256	FG256	CS280	BScan Order	Function Block	Macro cell	TQ144	PQ208	BG256	FG256	CS280	BScan Order
5	1	–	–	–	–	–	645	7	1	–	–	–	–	–	537
5	2	34	49	U3	R1	U1	642	7	2	–	62	W6	R3	W5	534
5	3	–	50	V2	N3	V1	639	7	3	45	63	Y6	M6	U6	531
5	4	–	–	–	–	–	636	7	4	–	–	–	–	–	528
5	5	35	51	V3	P2	U2	633	7	5	46	64	V7	T3	V6	525
5	6	–	54	Y2	P4	V3	630	7	6	–	66	U8	T4	W6	522
5	7	–	–	–	–	–	627	7	7	–	–	–	–	–	519
5	8	38[1]	55[1]	W4[1]	P5[1]	W2[1]	624	7	8	–	67	W7	P7	U7	516
5	9	–	–	V4	T2	W3	621	7	9	–	–	Y7	T5	V7	513
5	10	39	56	U5	N5	T4	618	7	10	–	69	V8	N7	W7	510
5	11	–	–	Y3	R4	U4	615	7	11	–	–	W8	R7	T7	507
5	12	40	57	Y4	M5	V4	612	7	12	48	70	Y8	M7	W8	504
5	13	–	–	–	–	–	609	7	13	–	–	–	–	–	501
5	14	41	58	V5	R5	W4	606	7	14	–	71	U9	T6	U8	498
5	15	43	60	V6	R6	V5	603	7	15	49	72	V9	N8	V8	495
5	16	–	–	–	–	–	600	7	16	–	–	–	–	–	492
5	17	44	61	U7	N6	T5	597	7	17	–	73	W9	T7	T8	489
5	18	–	–	–	–	–	594	7	18	–	–	–	–	–	486
6	1	–	–	–	–	–	591	8	1	-	–	–	–	–	483
6	2	135	197	D7	A5	D7	588	8	2	130	186	A9	E11	B10	480
6	3	136	198	C6	D6	A6	585	8	3	131	187	B9	A8	C10	477
6	4	–	–	–	–	–	582	8	4	–	–	–	–	–	474
6	5	137	199	B5	B5	B6	579	8	5	132	188	C9	C8	D10	471
6	6	138	200	A4	C6	C6	576	8	6	–	189	D9	B8	A9	468
6	7	–	–	–	–	–	573	8	7	–	–	–	–	–	465
6	8	139	201	C5	A4	D6	570	8	8	133	191	A8	D8	B9	462
6	9	–	–	B4	E7	A5	567	8	9	–	–	B8	A7	C9	459
6	10	140	202	A3	A3	C5	564	8	10	134	192	C8	E9	D9	456
6	11	–	–	D5	C5	B5	561	8	11	–	–	D8	B7	A8	453
6	12	–	203	C4	A2	D5	558	8	12	–	193	A7	D7	B8	450
6	13	–	–	–	–	–	555	8	13	–	–	–	–	–	447
6	14	142	205	B2	B4	B4	552	8	14	–	194	B7	A6	C8	444
6	15	143[1]	206[1]	A2[1]	C4[1]	C4[1]	549	8	15	–	195	B6	B6	B7	441
6	16	–	–	–	–	–	546	8	16	–	–	–	–	–	438
6	17	–	208	C3	B3	A3	543	8	17	–	196	A5	E8	C7	435
6	18	–	–	–	–	–	540	8	18	–	–	–	–	–	432

Notes:
1. Global control pin.
2. The pin-outs are the same for Pb-free versions of packages.

XC95288XL I/O Pins *(Continued)*(2)

Function Block	Macro cell	TQ144	PQ208	BG256	FG256	CS280	BScan Order	Function Block	Macro cell	TQ144	PQ208	BG256	FG256	CS280	BScan Order
9	1	–	–	–	–	–	429	11	1	–	–	–	–	–	321
9	2	50	74	Y11	R8	U9	426	11	2	–	87	Y15	P10	W13	318
9	3	51	75	W11	P8	T9	423	11	3	60	88	V14	T12	V13	315
9	4	–	–	–	–	–	420	11	4	–	–	–	–	–	312
9	5	52	76	V11	T8	W10	417	11	5	61	89	W15	N10	U13	309
9	6	53	77	U11	M8	V10	414	11	6	–	90	Y16	T13	T13	306
9	7	–	–	–	–	–	411	11	7	–	–	–	–	–	303
9	8	54	78	Y12	T9	U10	408	11	8	–	91	U14	M11	W14	300
9	9	–	–	W12	P9	W11	405	11	9	–	–	Y17	N11	T14	297
9	10	–	80	V12	R9	V11	402	11	10	64	95	V16	T14	W15	294
9	11	56	82	U12	M9	U11	399	11	11	66	97	Y18	R12	V15	291
9	12	57	83	Y13	T10	T11	396	11	12	68	99	V17	T15	W16	288
9	13	–	–	–	–	–	393	11	13	–	–	–	–	–	285
9	14	58	84	W13	M10	W12	390	11	14	69	100	Y19	R14	U16	282
9	15	–	85	V13	R10	V12	387	11	15	–	101	V18	N13	W17	279
9	16	–	–	–	–	–	384	11	16	–	–	–	–	–	276
9	17	59	86	W14	T11	T12	381	11	17	70	102	W19	R13	W18	273
9	18	–	–	–	–	–	378	11	18	–	–	–	–	–	270
10	1	–	–	–	–	–	375	12	1	–	–	–	–	–	267
10	2	117	170	A14	B11	C14	372	12	2	110	158	B18	B13	B19	264
10	3	118	171	C13	D11	B14	369	12	3	111	159	C17	B14	B18	261
10	4	–	–	–	–	–	366	12	4	–	–	–	–	–	258
10	5	119	173	B13	A11	A14	363	12	5	112	160	D16	C13	B17	255
10	6	120	174	A13	D10	C13	360	12	6	–	161	A18	A15	A18	252
10	7	–	–	–	–	–	357	12	7	–	–	–	–	–	249
10	8	121	175	D12	B10	B13	354	12	8	113	162	A17	C12	A17	246
10	9	–	–	C12	E12	A13	351	12	9	–	–	C16	B12	D16	243
10	10	124	178	A12	F12	A12	348	12	10	115	164	A16	D13	C16	240
10	11	125	179	B11	B9	C12	345	12	11	–	165	C15	A14	B16	237
10	12	126	180	C11	C9	B12	342	12	12	116	166	D14	E13	A16	234
10	13	–	–	–	–	–	339	12	13	–	–	–	–	–	231
10	14	128	182	B10	A9	B11	336	12	14	–	167	B15	A13	C15	228
10	15	–	183	C10	D9	C11	333	12	15	–	168	A15	C11	B15	225
10	16	–	–	–	–	–	330	12	16	–	–	–	–	–	222
10	17	129	185	D10	E10	A10	327	12	17	–	169	C14	A12	D15	219
10	18	–	–	–	–	–	324	12	18	–	–	–	–	–	216

Notes:
1. Global control pin.
2. The pin-outs are the same for Pb-free versions of packages.

XC95288XL I/O Pins *(Continued)*(2)

Function Block	Macro cell	TQ144	PQ208	BG256	FG256	CS280	BScan Order	Function Block	Macro cell	TQ144	PQ208	BG256	FG256	CS280	BScan Order
13	1	–	–	–	–	–	213	15	1	–	–	–	–	–	105
13	2	71	103	Y20	P13	V17	210	15	2	79	117	P19	M12	P16	102
13	3	–	106	V19	P15	U18	207	15	3	80	118	P20	M16	P19	99
13	4	–	–	–	–	–	204	15	4	–	–	–	–	–	96
13	5	–	107	U19	N14	V19	201	15	5	–	119	N17	K14	N17	93
13	6	–	109	T17	R16	U19	198	15	6	–	120	N18	L16	N18	90
13	7	–	–	–	–	–	195	15	7	–	–	–	–	–	87
13	8	74	110	V20	N15	T16	192	15	8	81	121	N19	K13	N19	84
13	9	–	–	U20	M15	T17	189	15	9	–	–	N20	K15	N16	81
13	10	–	111	T18	M13	T18	186	15	10	82	122	M17	L12	M19	78
13	11	75	112	T19	P16	T19	183	15	11	83	123	M18	K16	M17	75
13	12	–	113	R18	N16	R18	180	15	12	85	125	M20	J14	M16	72
13	13	–	–	–	–	–	177	15	13	–	–	–	–	–	69
13	14	76	114	P17	M14	R16	174	15	14	86	126	L19	J15	L19	66
13	15	77	115	R20	L15	R19	171	15	15	87	127	L18	J13	L18	63
13	16	–	–	–	–	–	168	15	16	–	–	–	–	–	60
13	17	78	116	P18	L13	P17	165	15	17	88	128	L20	J16	L17	57
13	18	–	–	–	–	–	162	15	18	–	–	–	–	–	54
14	1	–	–	–	–	–	159	16	1	–	–	–	–	–	51
14	2	–	144	G19	F15	G19	156	16	2	91	131	K19	K12	L16	48
14	3	100	145	F19	E15	G16	153	16	3	92	133	K18	J12	K18	45
14	4	–	–	–	–	–	150	16	4	–	–	–	–	–	42
14	5	101	146	E20	F13	F19	147	16	5	93	134	K17	H15	K17	39
14	6	102	147	G17	D16	F18	144	16	6	94	135	J20	H14	K16	36
14	7	–	–	–	–	–	141	16	7	–	–	–	–	–	33
14	8	103	148	F18	F14	F17	138	16	8	95	136	J19	G16	J19	30
14	9	–	–	E19	C16	F16	135	16	9	–	–	J18	H13	J18	27
14	10	104	149	D20	E14	E19	132	16	10	96	137	J17	G15	J17	24
14	11	105	150	E18	D15	E17	129	16	11	97	138	H20	H16	J16	21
14	12	–	151	D19	G12	E18	126	16	12	98	139	H19	F16	H19	18
14	13	–	–	–	–	–	123	16	13	–	–	–	–	–	15
14	14	106	152	C20	C15	E16	120	16	14	–	140	H18	H12	H18	12
14	15	107	154	D18	D14	D18	117	16	15	–	142	H17	E16	H17	9
14	16	–	–	–	–	–	114	16	16	–	–	–	–	–	6
14	17	–	155	C18	B16	D17	111	16	17	–	143	G20	G14	H16	3
14	18	–	–	–	–	–	108	16	18	–	–	–	–	–	0

Notes:
1. Global control pin.
2. The pin-outs are the same for Pb-free versions of packages.

XC95288XL Global, JTAG and Power Pins(1)

Pin Type	TQ144	PQ208	BG256	FG256	CS280
I/O/GCK1	30	44	T2	M2	R3
I/O/GCK2	32	46	U2	M3	T1
I/O/GCK3	38	55	W4	P5	W2
I/O/GTS1	5	7	C1	D4	D3
I/O/GTS2	6	9	E1	E5	E2
I/O/GTS3	2	3	C2	D3	C2
I/O/GTS4	3	5	D3	E3	C1
I/O/GSR	143	206	A2	C4	C4
TCK	67	98	U16	P12	T15
TDI	63	94	W16	R11	U14
TDO	122	176	B12	A10	D13
TMS	65	96	W17	N12	U15
V_{CCINT} 3.3V	8, 42, 84, 141	11, 59, 124, 153, 204	F1, P2, W5, Y9, V10, U13, W18, T20, M19, F20, E17, B17, B14, A10, C7, B3, G4	F4, F7, G6, H6, J6, K6, L7, F8, L8, F9, L9, F10, L10, G11, H11, J11, K11	E1, F2, N3, U5, W9, V9, U12, V16, R17, M18, G18, D19, C18, A15, A11, D8, A4
V_{CCIO} 2.5V/3.3 V	1, 37, 55, 73, 109, 127	1, 26, 53, 65, 79, 92, 105, 132, 157, 172, 181, 184	D4, D6, D11, D15, D17, F4, F17, K4, L17, R4, R17, U4, U6, U10, U15, U17	F3, K4, D5, F6, L6, P6, C7, N9, C10, F11, L11, P11, D12, G13, L14	C3, F1, K1, N4, V2 T6, T10, V14, V18, P18, K19, G17, C19, D14, D12, D11, A7
GND	18, 29, 36, 47, 62, 72, 89, 90, 99, 108, 114, 123, 144	2, 13, 24, 27, 42, 52, 68, 81, 93, 104,1 08, 129, 130, 141, 156, 163, 177, 190, 207	B1, K3, T1, Y5, W10, Y10, Y14, V15, U18, R19, K20, G18, B16, D13, A11, A6, J9, J10, J11, J12, K9, K10, K11, K12, L9, L10, L11, L12, M9, M10, M11, M12	A1, A16, C14, T1, B2, B15, R2, C3, P3, G7, H7, J7, K7, G8, H8, J8, K8, G9, H9, J9, K9, G10, H10, J10, K10, P14, R15, T16	E5, F5, G5, H5, J5, K5, L5, M5, N5, R5, R6, R7, R8, R9 R10, R11, R12, R13, R14, R15, P15, N15, M15, L15, K15, J15, H15, G15, F15, E15, E14, E13, E12, E11, E10, E9, E8, E7, E6, P5
No Connects	–	–	A1, A19, A20, B19, B20, C19, W1, W2, W3, W20, Y1	-	A1, B2, W1, U3, W19, U17, A19, C17, A2, B3

Notes:
1. The pin-outs are the same for Pb-free versions of packages.

Device Part Marking and Ordering Combination Information

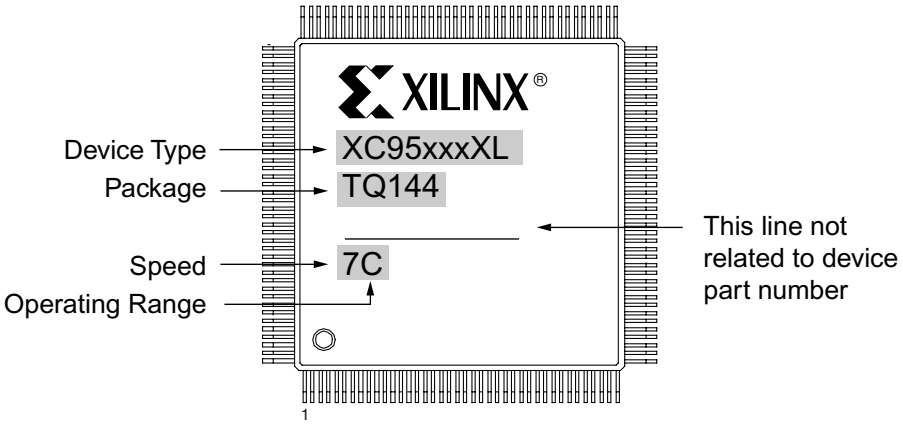

Sample package with part marking.

Device Ordering and Part Marking Number	Speed (pin-to-pin delay)	Pkg. Symbol	No. of Pins	Package Type	Operating Range(1)
XC95288XL-6TQ144C	6 ns	TQ144	144-pin	Thin Quad Flat Pack	C
XC95288XL-6PQ208C	6 ns	PQ208	208-pin	Plastic Quad Flat Package	C
XC95288XL-6BG256C	6 ns	BG256	256-ball	Plastic Ball Grid Array	C
XC95288XL-6FG256C	6 ns	FG256	256-ball	Plastic Fineline Ball Grid Array	C
XC95288XL-6CS280C	6 ns	CS280	280-ball	Chipscale Package	C
XC95288XL-7TQ144C	7.5 ns	TQ144	144-pin	Thin Quad Flat Pack	C
XC95288XL-7PQ208C	7.5 ns	PQ208	208-pin	Plastic Quad Flat Package	C
XC95288XL-7BG256C	7.5 ns	BG256	256-ball	Plastic Ball Grid Array	C
XC95288XL-7FG256C	7.5 ns	FG256	256-ball	Plastic Fineline Ball Grid Array	C
XC95288XL-7CS280C	7.5 ns	CS280	280-pin	Chipscale Package	C
XC95288XL-7TQ144I	7.5 ns	TQ144	144-pin	Thin Quad Flat Pack	I
XC95288XL-7PQ208I	7.5 ns	PQ208	208-pin	Plastic Quad Flat Package	I
XC95288XL-7BG256I	7.5 ns	BG256	256-ball	Plastic Ball Grid Array	I
XC95288XL-7FG256I	7.5 ns	FG256	256-ball	Plastic Fineline Ball Grid Array	I
XC95288XL-7CS280I	7.5 ns	CS280	280-pin	Chipscale Package	I
XC95288XL-10TQ144C	10 ns	TQ144	144-pin	Thin Quad Flat Pack	C
XC95288XL-10PQ208C	10 ns	PQ208	208-pin	Plastic Quad Flat Package	C
XC95288XL-10BG256C	10 ns	BG256	256-ball	Plastic Ball Grid Array	C
XC95288XL-10FG256C	10 ns	FG256	256-ball	Plastic Fineline Ball Grid Array	C
XC95288XL-10CS280C	10 ns	CS280	280-ball	Chipscale Package	C
XC95288XL-10TQ144I	10 ns	TQ144	144-pin	Thin Quad Flat Pack	I
XC95288XL-10PQ208I	10 ns	PQ208	208-pin	Plastic Quad Flat Package	I
XC95288XL-10BG256I	10 ns	BG256	256-ball	Plastic Ball Grid Array	I
XC95288XL-10FG256I	10 ns	FG256	256-ball	Plastic Fineline Ball Grid Array	I
XC95288XL-10CS280I	10 ns	CS280	280-ball	Chipscale Package	I
XC95288XL-6TQG144C	6 ns	TQG144	144-pin	Thin Quad Flat Pack; Pb-free	C

Device Ordering and Part Marking Number	Speed (pin-to-pin delay)	Pkg. Symbol	No. of Pins	Package Type	Operating Range(1)
XC95288XL-6PQG208C	6 ns	PQG208	208-pin	Plastic Quad Flat Package; Pb-free	C
XC95288XL-6BGG256C	6 ns	BGG256	256-ball	Plastic Ball Grid Array; Pb-free	C
XC95288XL-6FGG256C	6 ns	FGG256	256-ball	Plastic Fineline Ball Grid Array; Pb-free	C
XC95288XL-6CSG280C	6 ns	CSG280	280-ball	Chipscale Package; Pb-free	C
XC95288XL-7TQG144C	7.5 ns	TQG144	144-pin	Thin Quad Flat Pack; Pb-free	C
XC95288XL-7PQG208C	7.5 ns	PQG208	208-pin	Plastic Quad Flat Package; Pb-free	C
XC95288XL-7BGG256C	7.5 ns	BGG256	256-ball	Plastic Ball Grid Array; Pb-free	C
XC95288XL-7FGG256C	7.5 ns	FGG256	256-ball	Plastic Fineline Ball Grid Array; Pb-free	C
XC95288XL-7CSG280C	7.5 ns	CSG280	280-pin	Chipscale Package; Pb-free	C
XC95288XL-7TQG144I	7.5 ns	TQG144	144-pin	Thin Quad Flat Pack; Pb-free	I
XC95288XL-7PQG208I	7.5 ns	PQG208	208-pin	Plastic Quad Flat Package; Pb-free	I
XC95288XL-7BGG256I	7.5 ns	BGG256	256-ball	Plastic Ball Grid Array; Pb-free	I
XC95288XL-7FGG256I	7.5 ns	FGG256	256-ball	Plastic Fineline Ball Grid Array; Pb-free	I
XC95288XL-7CSG280I	7.5 ns	CSG280	280-pin	Chipscale Package; Pb-free	I
XC95288XL-10TQG144C	10 ns	TQG144	144-pin	Thin Quad Flat Pack; Pb-free	C
XC95288XL-10PQG208C	10 ns	PQG208	208-pin	Plastic Quad Flat Package; Pb-free	C
XC95288XL-10BGG256C	10 ns	BGG256	256-ball	Plastic Ball Grid Array; Pb-free	C
XC95288XL-10FGG256C	10 ns	FGG256	256-ball	Plastic Fineline Ball Grid Array; Pb-free	C
XC95288XL-10CSG280C	10 ns	CSG280	280-ball	Chipscale Package; Pb-free	C
XC95288XL-10TQG144I	10 ns	TQG144	144-pin	Thin Quad Flat Pack; Pb-free	I
XC95288XL-10PQG208I	10 ns	PQG208	208-pin	Plastic Quad Flat Package; Pb-free	I
XC95288XL-10BGG256I	10 ns	BGG256	256-ball	Plastic Ball Grid Array; Pb-free	I
XC95288XL-10FGG256I	10 ns	FGG256	256-ball	Plastic Fineline Ball Grid Array; Pb-free	I
XC95288XL-10CSG280I	10 ns	CSG280	280-ball	Chipscale Package; Pb-free	I

Notes:
1. C = Commercial: T_A = 0° to +70°C; I = Industrial: T_A = –40° to +85°C

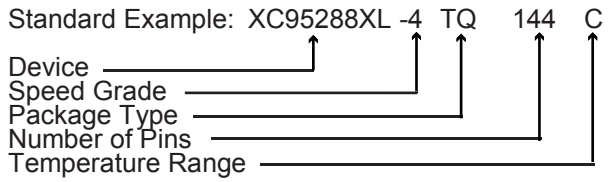

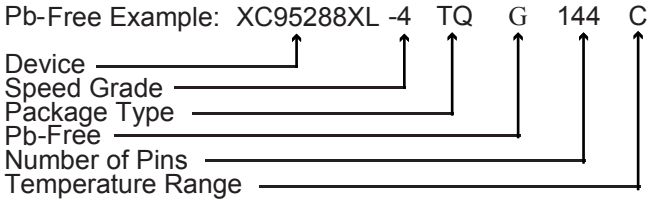

Warranty Disclaimer

THESE PRODUCTS ARE SUBJECT TO THE TERMS OF THE XILINX LIMITED WARRANTY WHICH CAN BE VIEWED AT http://www.xilinx.com/warranty.htm. THIS LIMITED WARRANTY DOES NOT EXTEND TO ANY USE OF THE PRODUCTS IN AN APPLICATION OR ENVIRONMENT THAT IS NOT WITHIN THE SPECIFICATIONS STATED ON THE THEN-CURRENT XILINX DATA SHEET FOR THE PRODUCTS. PRODUCTS ARE NOT DESIGNED TO BE FAIL-SAFE AND ARE NOT WARRANTED FOR USE IN APPLICATIONS THAT POSE A RISK OF PHYSICAL HARM OR LOSS OF LIFE. USE OF PRODUCTS IN SUCH APPLICATIONS IS FULLY AT THE RISK OF CUSTOMER SUBJECT TO APPLICABLE LAWS AND REGULATIONS.

Further Reading

The following Xilinx links go to relevant XC9500XL CPLD documentation, including XAPP111, Using the XC9500XL Timing Model, and XAPP784, Bulletproof CPLD Design Practices. Simply click on the link and scroll down.

Data Sheets, Application Notes, and White Papers.

Packaging

Revision History

The following table shows the revision history for this document.

Date	Version	Revision
09/28/98	1.0	Initial Xilinx release.
02/05/99	1.1	Updated pinouts to reflect BG256 (replaces BG352).
06/07/99	1.2	Added -7 speed and CS280 package.
02/08/01	1.3	Updated -6 AC and timing parameters, added FG256 package.
03/19/01	1.4	Pinout corrections.
06/20/02	1.5	Updated I_{CC} equation, page 1. Updated Component Availability Chart: added -7 Industrial. Added additional I_{IH} test conditions and measurements to DC Characteristics table.
05/27/03	1.6	Updated T_{SOL} from 260 to 220°C. Added Part Marking and Updated Ordering Information.
08/21/03	1.7	Updated Package Device Marking Pin 1 orientation.
07/15/04	1.8	Added Pb-free documentation
09/15/04	1.9	Added T_{APRPW} specification to AC Characteristics.
03/22/06	2.0	Add Warranty Disclaimer.
04/03/07	2.1	Add programming temperature range warning on page 1.

FPGAMALL
Authorized Distributor

OUR CERTIFICATE

A long-term cooperative relationship can be built between global customers and us by providing excellent products

Business Type	Trading Company, Distributor/Wholesaler
Main Products	Electronic Integrated Circuit
Certifications	ISO9001
Total Annual Revenue	US$2.5 Million - US$5 Million
Country / Region	Hongkong, China
Total Employees	100 - 200 People
Year Established	2018
Main Markets	North America South Asia Western Europe

sales@fpgamall.com
+00852-56428680