FPGAMALL
Authorized Distributor

https://www.fpgamall.com

THE DATASHEET OF FPGA

sales@fpgamall.com
+00852-56428680

XCR3064XL 64 Macrocell CPLD

DS017 (v2.4) September 15, 2008 **Product Specification**

Features

- Low power 3.3V 64 macrocell CPLD
- 5.5 ns pin-to-pin logic delays
- System frequencies up to 192 MHz
- 64 macrocells with 1,500 usable gates
- Available in small footprint packages
  - 44-pin VQFP (36 user I/O pins)
  - 48-ball CS BGA (40 user I/O pins)
  - 56-ball CP BGA (48 user I/O pins)
  - 100-pin VQFP (68 user I/O pins)
- Optimized for 3.3V systems
  - Ultra-low power operation
  - Typical Standby Current of 17 µA at 25°C
  - 5V tolerant I/O pins with 3.3V core supply
  - Advanced 0.35 micron five layer metal EEPROM process
  - Fast Zero Power CMOS design technology
  - 3.3V PCI electrical specification compatible outputs (no internal clamp diode on any input or I/O, no minimum clock input capacitance)
- Advanced system features
  - In-system programming
  - Input registers
  - Predictable timing model
  - Up to 23 available clocks per function block
  - Excellent pin retention during design changes
  - Full IEEE Standard 1149.1 boundary-scan (JTAG)
  - Four global clocks
  - Eight product term control terms per function block
- Fast ISP programming times
- Port Enable pin for dual function of JTAG ISP pins
- 2.7V to 3.6V supply voltage at industrial temperature range
- Programmable slew rate control per macrocell
- Security bit prevents unauthorized access
- Refer to XPLA3 family data sheet (**DS012**) for architecture description

Description

The CoolRunner™ XPLA3 XCR3064XL device is a 3.3V, 64-macrocell CPLD targeted at power sensitive designs that require leading edge programmable logic solutions. A total of four function blocks provide 1,500 usable gates. Pin-to-pin propagation delays are as fast as 5.5 ns with a maximum system frequency of 192 MHz.

TotalCMOS Design Technique for Fast Zero Power

CoolRunner XPLA3 CPLDs offer a TotalCMOS solution, both in process technology and design technique. Xilinx employs a cascade of CMOS gates to implement its sum of products instead of the traditional sense amp approach. This CMOS gate implementation allows Xilinx to offer CPLDs that are both high performance and low power, breaking the paradigm that to have low power, you must have low performance. Refer to Figure 1 and Table 1 showing the I_{CC} vs. Frequency of our XCR3064XL TotalCMOS CPLD (data taken with four resetable up/down, 16-bit counters at 3.3V, 25° C).

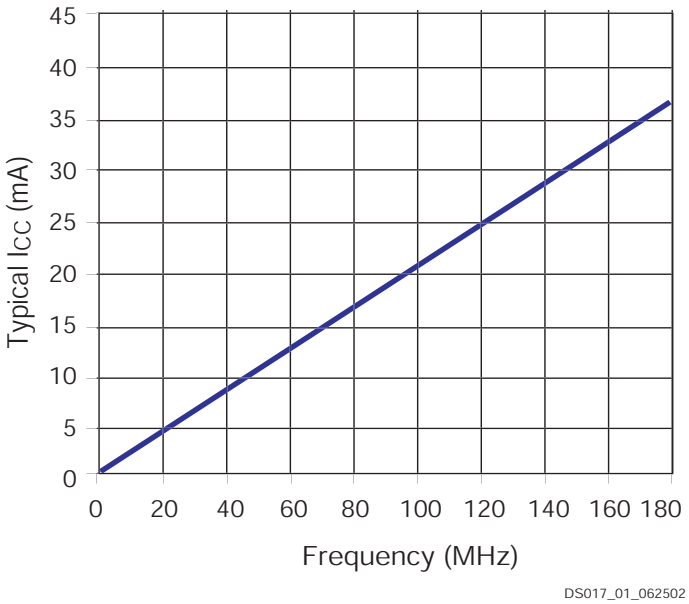

Figure 1: **I_{CC} vs. Frequency at V_{CC} = 3.3V, 25°C**

Table 1: **I_{CC} vs. Frequency** (V_{CC} = 3.3V, 25°C)

Frequency (MHz)	0	1	5	10	20	40	60	80	100	120	140	160	180
Typical I_{CC} (mA)	0.017	0.24	1.09	2.15	4.28	8.50	12.85	16.80	20.80	25.72	29.89	33.53	36.27

© 2000–2008 Xilinx, Inc. All Xilinx trademarks, registered trademarks, patents, and disclaimers are as listed at http://www.xilinx.com/legal.htm.
All other trademarks and registered trademarks are the property of their respective owners. All specifications are subject to change without notice.

XCR3064XL-7CP56I Xilinx Inc. IC CPLD 64MC 7NS 56CSP

DC Electrical Characteristics Over Recommended Operating Conditions

Symbol	Parameter[1]	Test Conditions	Typical	Min.	Max.	Unit
V_{OH}[2]	Output High voltage	V_{CC} = 3.0V to 3.6V, I_{OH} = –8 mA	-	2.4	-	V
		V_{CC} = 2.7V to 3.0V, I_{OH} = –8 mA	-	2.0	-	V
		I_{OH} = –500 µA	-	90% V_{CC}[3]	-	V
V_{OL}	Output Low voltage for 3.3V outputs	I_{OL} = 8 mA	-	-	0.4	V
I_{IL}[4]	Input leakage current	V_{IN} = GND or V_{CC} to 5.5V	-	–10	10	µA
I_{IH}[4]	I/O High-Z leakage current	V_{IN} = GND or V_{CC} to 5.5V	-	–10	10	µA
I_{CCSB}[8]	Standby current	V_{CC} = 3.6V	24.5	-	100	µA
I_{CC}	Dynamic current[5,6]	f = 1 MHz	-	-	0.75	mA
		f = 50 MHz	-	-	15	mA
C_{IN}	Input pin capacitance[7]	f = 1 MHz	-	-	8	pF
C_{CLK}	Clock input capacitance[7]	f = 1 MHz	-	-	12	pF
$C_{I/O}$	I/O pin capacitance[7]	f = 1 MHz	-	-	10	pF

Notes:
1. See the CoolRunner XPLA3 family data sheet (**DS012**) for recommended operating conditions.
2. See Figure 2 for output drive characteristics of the XPLA3 family.
3. This parameter guaranteed by design and characterization, not by testing.
4. Typical leakage current is less than 1 µA.
5. See Table 1, and Figure 1 for typical values.
6. This parameter measured with a 16-bit, resetable up/down counter loaded into every function block, with all outputs disabled and unloaded. Inputs are tied to V_{CC} or ground. This parameter guaranteed by design and characterization, not testing.
7. Typical values, not tested.
8. Typical value at 70°C.

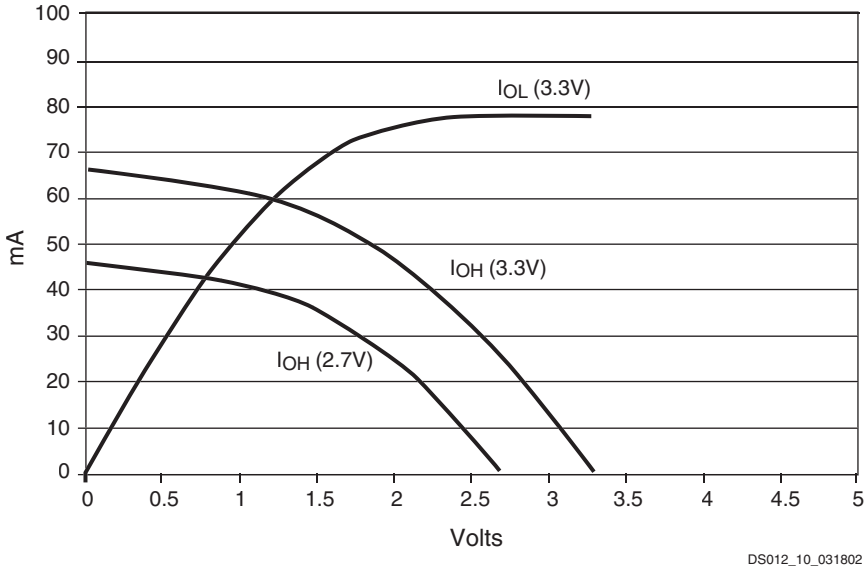

Figure 2: **Typical I/V Curve for the CoolRunner XPLA3 Family, 25°C**

XCR3064XL-7CP56I Xilinx Inc. IC CPLD 64MC 7NS 56CSP

AC Electrical Characteristics Over Recommended Operating Conditions

Symbol	Parameter[1,2]	-6		-7		-10		Unit
		Min.	Max.	Min.	Max.	Min.	Max.	
T_{PD1}	Propagation delay time (single p-term)	-	5.5	-	7.0	-	9.1	ns
T_{PD2}	Propagation delay time (OR array)[3]	-	6.0	-	7.5	-	10.0	ns
T_{CO}	Clock to output (global synchronous pin clock)	-	4.0	-	5.0	-	6.5	ns
T_{SUF}	Setup time (fast input register)	2.5	-	2.5	-	3.0	-	ns
T_{SU1}[4]	Setup time (single p-term)	3.5	-	4.3	-	5.4	-	ns
T_{SU2}	Setup time (OR array)	4.0	-	4.8	-	6.3	-	ns
T_H[4]	Hold time	0	-	0	-	0	-	ns
T_{WLH}[4]	Global Clock pulse width (High or Low)	2.5	-	3.0	-	4.0	-	ns
T_{PLH}[4]	P-term clock pulse width	4.0	-	5.0	-	6.0	-	ns
T_{APRPW}	Asynchronous preset/reset pulse width (High or Low)	4.0	-	5.0	-	6.0	-	ns
T_R[4]	Input rise time	-	20	-	20	-	20	ns
T_L[4]	Input fall time	-	20	-	20	-	20	ns
f_{SYSTEM}[4]	Maximum system frequency	-	192	-	119	-	95	MHz
T_{CONFIG}[4]	Configuration time[5]	-	60	-	60	-	60	µs
T_{INIT}[4]	ISP initialization time	-	60	-	60	-	60	µs
T_{POE}[4]	P-term OE to output enabled	-	7.5	-	9.3	-	11.2	ns
T_{POD}[4]	P-term OE to output disabled[6]	-	7.5	-	9.3	-	11.2	ns
T_{PCO}[4]	P-term clock to output	-	7.0	-	8.3	-	10.7	ns
T_{PAO}[4]	P-term set/reset to output valid	-	8.0	-	9.3	-	11.2	ns

Notes:
1. Specifications measured with one output switching.
2. See the CoolRunner XPLA3 family data sheet (**DS012**) for recommended operating conditions.
3. See Figure 4 for derating.
4. These parameters guaranteed by design and/or characterization, not testing.
5. Typical current draw during configuration is 6 mA at 3.6V.
6. Output C_L = 5 pF.

XCR3064XL-7CP56I Xilinx Inc. IC CPLD 64MC 7NS 56CSP

Internal Timing Parameters

Symbol	Parameter[1, 2]	-6		-7		-10		Unit
		Min.	Max.	Min.	Max.	Min.	Max.	
Buffer Delays								
T_{IN}	Input buffer delay	-	1.3	-	1.6	-	2.2	ns
T_{FIN}	Fast Input buffer delay	-	2.3	-	3.0	-	3.1	ns
T_{GCK}	Global Clock buffer delay	-	0.8	-	1.0	-	1.3	ns
T_{OUT}	Output buffer delay	-	2.2	-	2.7	-	3.6	ns
T_{EN}	Output buffer enable/disable delay	-	4.2	-	5.0	-	5.7	ns
Internal Register and Combinatorial Delays								
T_{LDI}	Latch transparent delay	-	1.3	-	1.6	-	2.0	
T_{SUI}	Register setup time	1.0	-	1.0	-	1.2	-	ns
T_{HI}	Register hold time	0.3	-	0.5	-	0.7	-	ns
T_{ECSU}	Register clock enable setup time	2.0	-	2.5	-	3.0	-	ns
T_{ECHO}	Register clock enable hold time	3.0	-	4.5	-	5.5	-	ns
T_{COI}	Register clock to output delay	-	1.0	-	1.3	-	1.6	ns
T_{AOI}	Register async. S/R to output delay	-	2.5	-	2.3	-	2.1	ns
T_{RAI}	Register async. recovery	-	4.0	-	5.0	-	6.0	ns
T_{PTCK}	Product term clock delay	-	2.5	-	2.7	-	3.3	ns
T_{LOGI1}	Internal logic delay (single p-term)	-	2.0	-	2.7	-	3.3	ns
T_{LOGI2}	Internal logic delay (PLA OR term)	-	2.5	-	3.2	-	4.2	ns
Feedback Delays								
T_F	ZIA delay	-	0.7	-	2.9	-	3.5	ns
Time Adders								
T_{LOGI3}	Fold-back NAND delay	-	2.0	-	2.5	-	3.0	ns
T_{UDA}	Universal delay	-	1.5	-	2.0	-	2.5	ns
T_{SLEW}	Slew rate limited delay	-	4.0	-	5.0	-	6.0	ns

Notes:
1. These parameters guaranteed by design and/or characterization, not testing.
2. See the CoolRunner XPLA3 family data sheet (**DS012**) for timing model.

Switching Characteristics

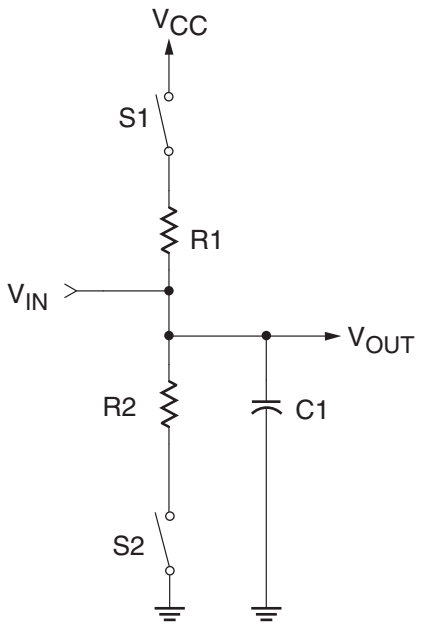

Component	Values
R1	390Ω
R2	390Ω
C1	35 pF

Measurement	S1	S2
T_{POE} (High)	Open	Closed
T_{POE} (Low)	Closed	Open
T_P	Closed	Closed

Note: For T_{POD}, C1 = 5 pF. Delay measured at output level of V_{OL} + 300 mV, V_{OH} – 300 mV.

DS017_03_102401

Figure 3: **AC Load Circuit**

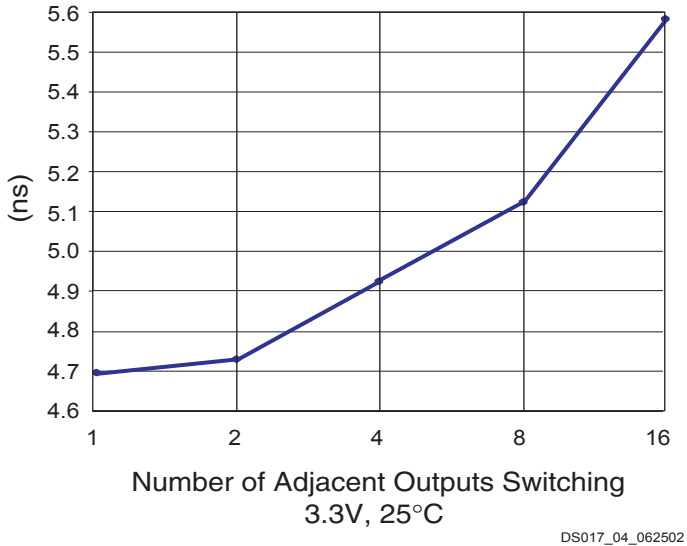

DS017_04_062502

Figure 4: **Derating Curve for T_{PD2}, 3.3V, 25°C**

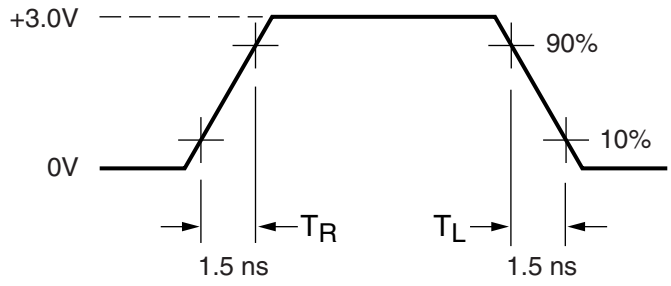

Measurements:
All circuit delays are measured at the +1.5V level of inputs and outputs, unless otherwise specified.

DS017_05_042800

Figure 5: **Voltage Waveform**

Pin Descriptions

Table 2: **XCR3064XL User I/O Pins**

	PC44[1]	VQ44	CS48	CP56	VQ100
Total User I/O Pins	36	36	40	48	68

1. This is an obsolete package type. It remains here for legacy support only

Table 3: **XCR3064XL I/O Pins**

Function Block	Macro-cell	PC44[1]	VQ44	CS48	CP56	VQ100
1	1	41	35	C5	C8	85
1	2	40	34	A6	A8	84
1	3	-	-	-	-	83
1	4	-	-	-	A9	81
1	5	-	-	-	A5	80
1	6	-	-	A7	A10	79
1	7	-	-	-	-	76
1	8	39	33	B6	B10	75
1	9	38[2]	32[2]	B7[2]	C10[2]	73[2]
1	10	37	31	D4	D8	71
1	11	36	30	C6	E8	69
1	12	-	-	-	-	68
1	13	-	-	-	-	67
1	14	34	28	D6	F8	65
1	15	33	27	D7	E10	64
1	16	-	-	-	-	63
2	1	4	42	A2	C4	92
2	2	5	43	A1	C3	93
2	3	6	44	C4	A1	94
2	4	-	-	-	-	96
2	5	-	-	-	B1	97
2	6	-	-	-	-	98
2	7	-	-	-	A2	99
2	8	-	-	B2	A3	100
2	9	7[2]	1[2]	B1[2]	C1[2]	4[2]
2	10	8	2	C2	D1	6
2	11	9	3	C1	D3	8
2	12	-	-	-	-	9
2	13	-	-	-	-	10

Table 3: **XCR3064XL I/O Pins**

Function Block	Macro-cell	PC44[1]	VQ44	CS48	CP56	VQ100
2	14	11	5	D3	E3	12
2	15	12	6	D1	F1	13
2	16	-	-	-	-	14
3	1	32[2]	26[2]	E5[2]	F10[2]	62[2]
3	2	31	25	E7	G8	61
3	3	-	-	-	-	60
3	4	29	23	F7	H10	58
3	5	-	-	-	-	57
3	6	-	-	-	-	56
3	7	-	-	F6	K8	54
3	8	-	-	-	K10	52
3	9	28	22	G7	K9	48
3	10	27	21	G6	J10	47
3	11	26	20	F5	H8	46
3	12	25	19	G5	H7	45
3	13	24	18	F4	H6	44
3	14	-	-	-	-	42
3	15	-	-	-	K7	41
3	16	-	-	-	-	40
4	1	13[2]	7[2]	D2[2]	G1[2]	15[2]
4	2	14	8	E1	F3	16
4	3	-	-	-	-	17
4	4	16	10	F1	G3	19
4	5	17	11	G1	J1	20
4	6	-	-	-	-	21
4	7	-	-	-	-	23
4	8	-	-	-	K1	25
4	9	18	12	E4	K4	29
4	10	19	13	F2	K2	30
4	11	20	14	G2	K3	31
4	12	21	15	F3	H3	32
4	13	-	-	G3	H4	33
4	14	-	-	-	-	35
4	15	-	-	-	K5	36
4	16	-	-	-	-	37

Notes:
1. This is an obsolete package type. It remains here for legacy support only.
2. JTAG pins.

XCR3064XL-7CP56I Xilinx Inc. IC CPLD 64MC 7NS 56CSP

Table 4: **XCR3064XL Global, JTAG, Port Enable, Power, and No Connect Pins**

Pin Type	PC44[1]	VQ44	CS48	CP56	VQ100
IN0 / CLK0	2	40	A3	C5	90
IN1 / CLK1	1	39	B4	C6	89
IN2 / CLK2	44	38	A4	C7	88
IN3 / CLK3	43	37	B5	A6	87
TCK	32	26	E5	F10	62
TDI	7	1	B1	C1	4
TDO	38	32	B7	C10	73
TMS	13	7	D2	G1	15
PORT_EN	10[2]	4[2]	C3[2]	E1[2]	11[2]
V_{CC}	3, 15, 23, 35	9, 17, 29, 41	B3, C7, E2, G4	A4, D10, H1, H5	3, 18, 34, 39, 51, 66, 82, 91
GND	22, 30, 42	16, 24, 36	A5, E3, E6	A7, G10, K6	26, 38, 43, 59, 74, 86, 95
No Connects	-	-	-	-	1, 2, 5, 7, 22, 24, 27, 28, 49, 50, 53, 55, 70, 72, 77, 78

Notes:
1. This is an obsolete package type. It remains here for legacy support only.
2. Port Enable is brought High to enable JTAG pins when JTAG pins are used as I/O. See family data sheet (**DS012**) for more information.

Device Part Marking

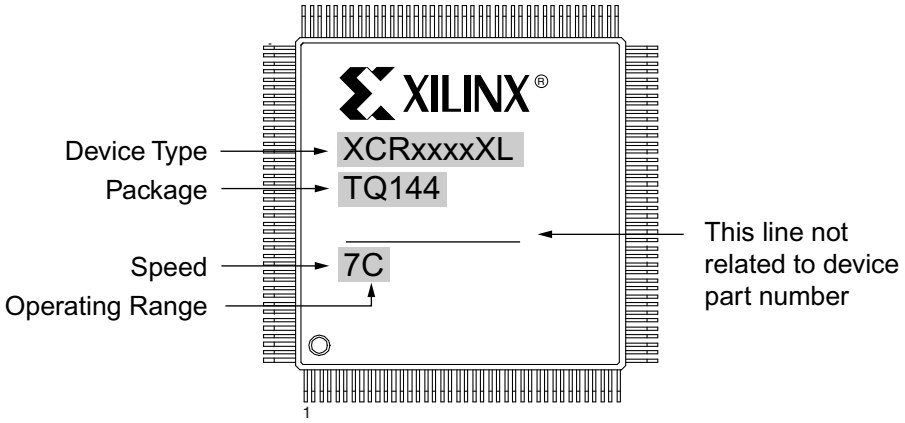

Sample package with part marking.

Notes:
1. Due to the small size of chip scale packages, part marking on these packages does not follow the above sample and the complete part number cannot be included in the marking. Part marking on chip scale packages by line:
   - Line 1 = X (Xilinx logo), then truncated part number (no XC), i.e., 3064XL.
   - Line 2 = Not related to device part number.
   - Line 3 = Not related to device part number.
   - Line 4 = Package code, speed, operating temperature, three digits not related to device part number. Package codes: C1 = CS48, C2 = CSG48, C3 = CP56, C4 = CPG56.

XCR3064XL-7CP56I Xilinx Inc. IC CPLD 64MC 7NS 56CSP

Ordering Combination Information

Device Ordering and Part Marking Number	Speed (pin-to-pin delay)	Pkg. Symbol	No. of Pins	Package Type	Operating Range[1]
XCR3064XL-6VQ44C	6 ns	VQ44	44	Very Thin Quad Flat Pack (VQFP)	C
XCR3064XL-6VQG44C	6 ns	VQG44	44	Very Thin Quad Flat Pack (VQFP); Pb-Free	C
XCR3064XL-6CS48C	6 ns	CS48	48	Chip Scale Package (CSP)	C
XCR3064XL-6CSG48C	6 ns	CSG48	48	Chip Scale Package (CSP); Pb-Free	C
XCR3064XL-6CP56C	6 ns	CP56	56	Chip Scale Package (CSP)	C
XCR3064XL-6CPG56C	6 ns	CPG56	56	Chip Scale Package (CSP); Pb-Free	C
XCR3064XL-6VQ100C	6 ns	VQ100	100	Very Thin Quad Flat Package (VQFP)	C
XCR3064XL-6VQG100C	6 ns	VQG100	100	Very Thin Quad Flat Package (VQFP); Pb-Free	C
XCR3064XL-7VQ44C	7.5 ns	VQ44	44	Very Thin Quad Flat Pack (VQFP)	C
XCR3064XL-7VQG44C	7.5 ns	VQG44	44	Very Thin Quad Flat Pack (VQFP); Pb-Free	C
XCR3064XL-7CS48C	7.5 ns	CS48	48	Chip Scale Package (CSP)	C
XCR3064XL-7CSG48C	7.5 ns	CSG48	48	Chip Scale Package (CSP); Pb-Free	C
XCR3064XL-7CP56C	7.5 ns	CP56	56	Chip Scale Package (CSP)	C
XCR3064XL-7CPG56C	7.5 ns	CPG56	56	Chip Scale Package (CSP); Pb-Free	C
XCR3064XL-7VQ100C	7.5 ns	VQ100	100	Very Thin Quad Flat Package (VQFP)	C
XCR3064XL-7VQG100C	7.5 ns	VQG100	100	Very Thin Quad Flat Package (VQFP); Pb-Free	C
XCR3064XL-7VQ44I	7.5 ns	VQ44	44	Very Thin Quad Flat Pack (VQFP)	I
XCR3064XL-7VQG44I	7.5 ns	VQG44	44	Very Thin Quad Flat Pack (VQFP); Pb-Free	I
XCR3064XL-7CS48I	7.5 ns	CS48	48	Chip Scale Package (CSP)	I
XCR3064XL-7CSG48I	7.5 ns	CSG48	48	Chip Scale Package (CSP); Pb-Free	I
XCR3064XL-7CP56I	7.5 ns	CP56	56	Chip Scale Package (CSP)	I
XCR3064XL-7CPG56I	7.5 ns	CPG56	56	Chip Scale Package (CSP); Pb-Free	I
XCR3064XL-7VQ100I	7.5 ns	VQ100	100	Very Thin Quad Flat Package (VQFP)	I
XCR3064XL-7VQG100I	7.5 ns	VQG100	100	Very Thin Quad Flat Package (VQFP); Pb-Free	I
XCR3064XL-10VQ44C	10 ns	VQ44	44	Very Thin Quad Flat Pack (VQFP)	C
XCR3064XL-10VQG44C	10 ns	VQG44	44	Very Thin Quad Flat Pack (VQFP); Pb-Free	C
XCR3064XL-10CS48C	10 ns	CS48	48	Chip Scale Package (CSP)	C
XCR3064XL-10CSG48C	10 ns	CSG48	48	Chip Scale Package (CSP); Pb-Free	C
XCR3064XL-10CP56C	10 ns	CP56	56	Chip Scale Package (CSP)	C
XCR3064XL-10CPG56C	10 ns	CPG56	56	Chip Scale Package (CSP); Pb-Free	C
XCR3064XL-10VQ100C	10 ns	VQ100	100	Very Thin Quad Flat Package (VQFP)	C
XCR3064XL-10VQG100C	10 ns	VQG100	100	Very Thin Quad Flat Package (VQFP); Pb-Free	C
XCR3064XL-10VQ44I	10 ns	VQ44	44	Very Thin Quad Flat Pack (VQFP)	I
XCR3064XL-10VQG44I	10 ns	VQG44	44	Very Thin Quad Flat Pack (VQFP); Pb-Free	I
XCR3064XL-10CS48I	10 ns	CS48	48	Chip Scale Package (CSP)	I
XCR3064XL-10CSG48I	10 ns	CSG48	48	Chip Scale Package (CSP); Pb-Free	I
XCR3064XL-10CP56I	10 ns	CP56	56	Chip Scale Package (CSP)	I

XCR3064XL-7CP56I Xilinx Inc. IC CPLD 64MC 7NS 56CSP

Ordering Combination Information *(Continued)*

Device Ordering and Part Marking Number	Speed (pin-to-pin delay)	Pkg. Symbol	No. of Pins	Package Type	Operating Range(1)
XCR3064XL-10CPG56I	10 ns	CPG56	56	Chip Scale Package (CSP); Pb-Free	I
XCR3064XL-10VQ100I	10 ns	VQ100	100	Very Thin Quad Flat Package (VQFP)	I
XCR3064XL-10VQG100I	10 ns	VQG100	100	Very Thin Quad Flat Package (VQFP); Pb-Free	I

Notes:
1. C = Commercial: T_A = 0° to +70°C; I = Industrial: T_A = –40° to +85°C

XCR3064XL-7CP56I Xilinx Inc. IC CPLD 64MC 7NS 56CSP

Warranty Disclaimer

THESE PRODUCTS ARE SUBJECT TO THE TERMS OF THE XILINX LIMITED WARRANTY WHICH CAN BE VIEWED AT http://www.xilinx.com/warranty.htm. THIS LIMITED WARRANTY DOES NOT EXTEND TO ANY USE OF THE PRODUCTS IN AN APPLICATION OR ENVIRONMENT THAT IS NOT WITHIN THE SPECIFICATIONS STATED ON THE THEN-CURRENT XILINX DATA SHEET FOR THE PRODUCTS. PRODUCTS ARE NOT DESIGNED TO BE FAIL-SAFE AND ARE NOT WARRANTED FOR USE IN APPLICATIONS THAT POSE A RISK OF PHYSICAL HARM OR LOSS OF LIFE. USE OF PRODUCTS IN SUCH APPLICATIONS IS FULLY AT THE RISK OF CUSTOMER SUBJECT TO APPLICABLE LAWS AND REGULATIONS.

Additional Information

CoolRunner XPLA3 CPLD Data Sheets and Application Notes

Device Packages

Device Package User Guide

Revision History

The following table shows the revision history for this document.

Date	Version	Revision
06/01/00	1.0	Initial Xilinx release.
08/30/00	1.1	Added 48-ball CS BGA package.
11/18/00	1.2	Updated to full production data sheet; corrected note in Table 4 to read: "port enable pin is brought High".
12/08/00	1.3	Added PC44 package.
04/11/01	1.4	Added Typical I/V curve, Figure 2; added Table 2: Total User I/O; changed V_{OH} spec.
04/19/01	1.5	Updated Typical I/V curve, Figure 2: added voltage levels.
01/08/02	1.6	Moved I_{CC} vs. Freq Figure 1 and Table 1 to page 1. Added single p-term setup time (T_{SU1}) to AC Table, renamed T_{SU} to T_{SU2} for setup time through the OR array. Updated T_{SUF} and T_{FIN} spec to match software timing. Added T_{INIT} spec. Updated T_{CONFIG} spec. Updated T_{HI} spec to correct a typo. Updated AC Load Circuit diagram to more closely resemble true test conditions, added note for T_{POD} delay measurement. Updated note 5 in AC Characteristics table lowering typical current draw during configuration.
04/02/02	1.7	Updated the following specs based on characterization of product after move to UMC fabrication: V_{OH}, F_{SYSTEM}, T_{PCO} (added T_{PTCK} parameter), T_F, and T_{LOGI3}. Added typical leakage current note to DC table. Also updated Typical I_{CC} vs. Frequency and Derating Curve for T_{PD2} (improved to 5.4 ns for 16 outputs switching) per new characterization data.
01/27/03	1.8	Corrected typical I_{CC} vs. Frequency (Figure 1) and Derating Curve for T_{PD2} (Figure 4). Updated F_{MAX} for -6 speed, I_{CC} @ f=1 MHz based on characterization of product after move to UMC fabrication. Updated Ordering Information format.
07/15/03	1.9	Updated Device Part Marking. Updated test conditions for I_{IL} and I_{IH}.
08/21/03	2.0	Updated Package Device Marking Pin 1 orientation.
02/13/04	2.1	Add soldering temperature. Add links to application notes and data sheets and packages.
04/08/05	2.2	Added I_{CCSB} Typical and T_{APRPW} specifications. Removed T_{SOL} specification.
03/31/06	2.3	Added Warranty Disclaimer. Added Pb-Free information to ordering table.
09/15/08	2.4	Added notes to Table 2, Table 3 and Table 4 to indicate the PC44 package is obsolete. Removed part number references to the obsolete PC44C and PCG44C packages in the Ordering Combination Information. See Product Discontinuation Notice **xcn07022.pdf**.

FPGAMALL
Authorized Distributor

OUR CERTIFICATE

A long-term cooperative relationship can be built between global customers and us by providing excellent products

Business Type	Trading Company, Distributor/Wholesaler
Main Products	Electronic Integrated Circuit
Certifications	ISO9001
Total Annual Revenue	US$2.5 Million - US$5 Million
Country / Region	Hongkong, China
Total Employees	100 - 200 People
Year Established	2018
Main Markets	North America South Asia Western Europe

sales@fpgamall.com
+00852-56428680