https://www.fpgamall.com

THE DATASHEET OF FPGA

XCR3256XL 256 Macrocell CPLD

DS013 (v2.7) March 31, 2006

Product Specification

Features

- Low power 3.3V 256 macrocell CPLD
- 7.0 ns pin-to-pin logic delays
- System frequencies up to 154 MHz
- 256 macrocells with 6,000 usable gates
- Available in small footprint packages
  - 144-pin TQFP (120 user I/O pins)
  - 208-pin PQFP (164 user I/O)
  - 256-ball FBGA (164 user I/O)
  - 280-ball CS BGA (164 user I/O)
- Optimized for 3.3V systems
  - Ultra low power operation
  - Typical Standby Current of 18 µA at 25° C
  - 5V tolerant I/O pins with 3.3V core supply
  - Advanced 0.35 micron five layer metal EEPROM process
  - Fast Zero Power™ (FZP) CMOS design technology
  - 3.3V PCI electrical specification compatible outputs (no internal clamp diode on any input or I/O)
- Advanced system features
  - In-system programming
  - Input registers
  - Predictable timing model
  - Up to 23 clocks available per function block
  - Excellent pin retention during design changes
  - Full IEEE Standard 1149.1 boundary-scan (JTAG)
  - Four global clocks
  - Eight product term control terms per function block
- Fast ISP programming times
- Port Enable pin for additional I/O
- 2.7V to 3.6V supply voltage at industrial grade voltage range
- Programmable slew rate control per output
- Security bit prevents unauthorized access
- Refer to the CoolRunner™ XPLA3 family data sheet (**DS012**) for architecture description

Description

The CoolRunner™ XPLA3 XCR3256XL device is a 3.3V, 256 macrocell CPLD targeted at power sensitive designs that require leading edge programmable logic solutions. A total of 16 function blocks provide 6,000 usable gates. Pin-to-pin propagation delays are as fast as 7.0 ns with a maximum system frequency of 154 MHz.

TotalCMOS Design Technique for Fast Zero Power

CoolRunner XPLA3 CPLDs offer a TotalCMOS™ solution, both in process technology and design technique. These CPLDs employ a cascade of CMOS gates to implement their sum of products, instead of the traditional sense amp approach. This CMOS gate implementation allows Xilinx CPLDs to offer devices that are both high performance and low power, breaking the paradigm that to have low power, you must have low performance. Refer to Figure 1 and Table 1 showing the I_{CC} vs. Frequency of our XCR3256XL TotalCMOS CPLD (data taken with 16 resetable up/down, 16-bit counters at 3.3V, 25°C).

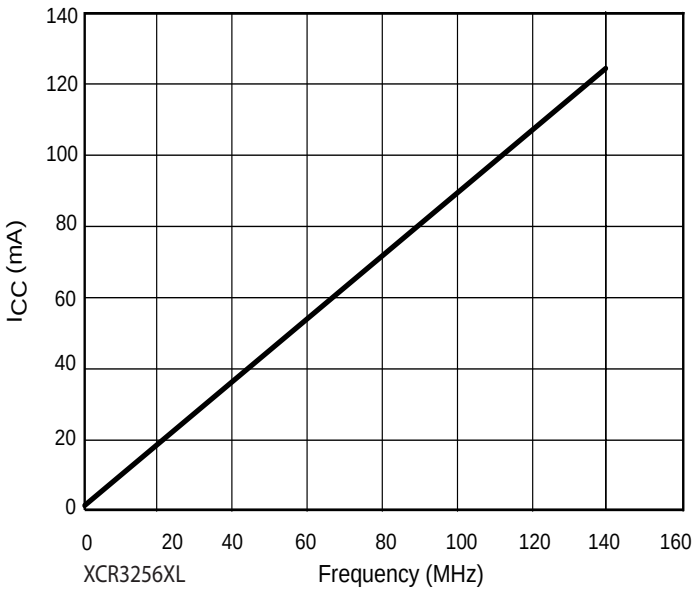

Figure 1: **Typical I_{CC} vs. Frequency at V_{CC} = 3.3V, 25°C**

Table 1: **Typical I_{CC} vs. Frequency at V_{CC} = 3.3V, 25°C**

Frequency (MHz)	0	1	10	20	40	60	80	100	120	140
Typical I_{CC} (mA)	0.018	0.98	9.69	19.3	38.1	56.2	73.7	90.8	107.3	123.9

© 2006 Xilinx, Inc. All rights reserved. All Xilinx trademarks, registered trademarks, patents, and disclaimers are as listed at http://www.xilinx.com/legal.htm. All other trademarks and registered trademarks are the property of their respective owners. All specifications are subject to change without notice.

DC Electrical Characteristics Over Recommended Operating Conditions(1)

Symbol	Parameter	Test Conditions	Typical	Min.	Max.	Unit
V_{OH}(2)	Output High voltage	V_{CC} = 3.0V to 3.6V, I_{OH} = –8 mA	-	2.4	-	
		V_{CC} = 2.7V to 3.0V, I_{OH} = –8 mA	-	2.0	-	
		I_{OH} = –500 µA	-	90% V_{CC}(3)	-	
V_{OL}	Output Low voltage for 3.3V outputs	I_{OL} = 8 mA	-	-	0.4	V
I_{IL}	Input leakage current	V_{IN} = GND or V_{CC} to 5.5V	-	–10	10	µA
I_{IH}	I/O High-Z leakage current	V_{IN} = GND or V_{CC} to 5.5V	-	–10	10	µA
I_{CCSB}(7)	Standby current	V_{CC} = 3.6V	30.5	-	100	µA
I_{CC}	Dynamic current(4,5)	f = 1 MHz	-	-	2	mA
		f = 50 MHz	-	-	60	mA
C_{IN}	Input pin capacitance(6)	f = 1 MHz	-	-	8	pF
C_{CLK}	Clock input capacitance(6)	f = 1 MHz	-	5	12	pF
$C_{I/O}$	I/O pin capacitance(6)	f = 1 MHz	-	-	10	pF

Notes:
1. See the CoolRunner XPLA3 family data sheet (DS012) for recommended operating conditions.
2. See Figure 2 for output drive characteristics of the XPLA3 family.
3. This parameter guaranteed by design and characterization, not by testing.
4. See Table 1, Figure 1 for typical values.
5. This parameter measured with a 16-bit, resetable up/down counter loaded into every function block, with all outputs disabled and unloaded. Inputs are tied to V_{CC} or ground. This parameter guaranteed by design and characterization, not testing.
6. Typical values, not tested.
7. Typical value at 70° C.

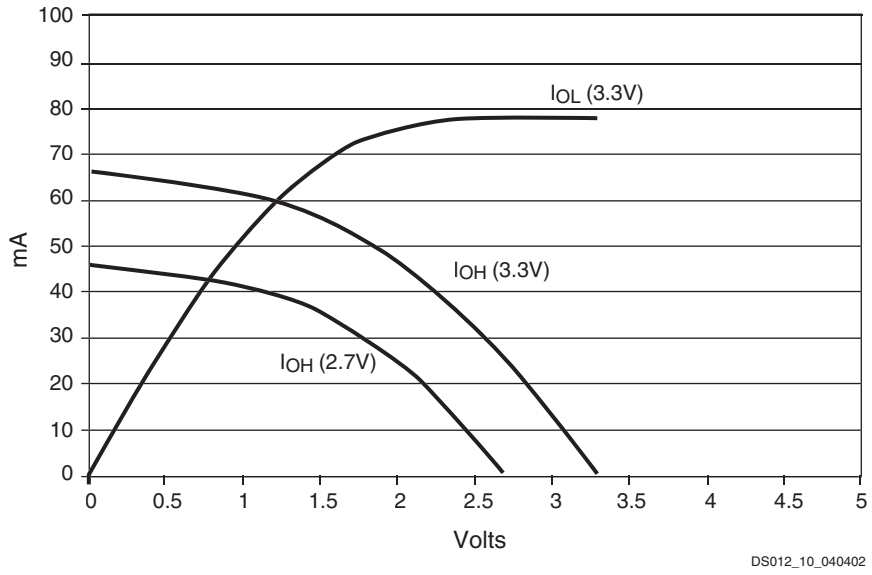

Figure 2: **Typical I/V Curve for the CoolRunner XPLA3 Family. 25°C**

AC Electrical Characteristics Over Recommended Operating Conditions(1,2)

Symbol	Parameter	-7		-10		-12		Unit
		Min.	Max.	Min.	Max.	Min.	Max.	
T_{PD1}	Propagation delay time (single p-term)	-	7.0	-	9.0	-	10.8	ns
T_{PD2}	Propagation delay time (OR array)(3)	-	7.5	-	10.0	-	12.0	ns
T_{CO}	Clock to output (global synchronous pin clock)	-	4.5	-	5.8	-	6.9	ns
T_{SUF}	Setup time (fast input register)	2.5	-	3.0	-	3.0	-	ns
T_{SU1}(4)	Setup time (single p-term)	4.3	-	5.5	-	6.7	-	ns
T_{SU2}	Setup time (OR array)	4.8	-	6.5	-	7.9	-	ns
T_{H}(4)	Hold time	0	-	0	-	0	-	ns
T_{WLH}(4)	Global Clock pulse width (High or Low)	3.0	-	4.0	-	5.0	-	ns
T_{PLH}(4)	P-term clock pulse width	4.5	-	6.0	-	7.5	-	ns
T_{APRPW}	Asynchronous preset/reset pulse width (High or Low)	4.5	-	6.0	-	7.5	-	ns
T_{R}(4)	Input rise time	-	20	-	20	-	20	ns
T_{L}(4)	Input fall time	-	20	-	20	-	20	ns
f_{SYSTEM}(4)	Maximum system frequency	-	154	-	105	-	88	MHz
T_{CONFIG}(4)	Configuration time(5)	-	200	-	200	-	200	µs
T_{INIT}(4)	ISP initialization time	-	200	-	200	-	200	µs
T_{POE}(4)	P-term OE to output enabled	-	9.0	-	11.0	-	13.0	ns
T_{POD}(4)	P-term OE to output disabled(6)	-	9.0	-	11.0	-	13.0	ns
T_{PCO}(4)	P-term clock to output	-	8.0	-	10.3	-	12.4	ns
T_{PAO}(4)	P-term set/reset to output valid	-	9.0	-	11.0	-	13.0	ns

Notes:
1. Specifications measured with one output switching.
2. See XPLA3 family data sheet (**DS012**) for recommended operating conditions.
3. See Figure 4 for derating.
4. These parameters guaranteed by design and/or characterization, not testing.
5. Typical current draw during configuration is 10 mA at 3.6V.
6. Output C_L = 5 pF.

Internal Timing Parameters(1,2)

Symbol	Parameter	-7		-10		-12		Unit
		Min.	Max.	Min.	Max.	Min.	Max.	
Buffer Delays								
T_{IN}	Input buffer delay	-	2.5	-	3.3	-	4.0	ns
T_{FIN}	Fast input buffer delay	-	2.7	-	3.3	-	3.3	ns
T_{GCK}	Global clock buffer delay	-	1.0	-	1.3	-	1.5	ns
T_{OUT}	Output buffer delay	-	2.5	-	3.2	-	3.8	ns
T_{EN}	Output buffer enable/disable delay	-	4.5	-	5.2	-	6.0	ns
Internal Register and Combinatorial Delays								
T_{LDI}	Latch transparent delay	-	1.3	-	1.6	-	2.0	ns
T_{SUI}	Register setup time	0.8	-	1.0	-	1.2	-	ns
T_{HI}	Register hold time	0.3	-	0.5	-	0.7	-	ns
T_{ECSU}	Register clock enable setup time	2.0	-	2.5	-	3.0	-	ns
T_{ECHO}	Register clock enable hold time	3.0	-	4.5	-	5.5	-	ns
T_{COI}	Register clock to output delay	-	1.0	-	1.3	-	1.6	ns
T_{AOI}	Register async. S/R to output delay	-	2.0	-	2.0	-	2.2	ns
T_{RAI}	Register async. recovery	-	5.0	-	7.0	-	8.0	ns
T_{PTCK}	Product term clock delay	-	2.0	-	2.5	-	3.0	ns
T_{LOGI1}	Internal logic delay (single p-term)	-	2.0	-	2.5	-	3.0	ns
T_{LOGI2}	Internal logic delay (PLA OR term)	-	2.5	-	3.5	-	4.2	ns
Feedback Delays								
T_F	ZIA delay	-	2.2	-	3.7	-	4.4	ns
Time Adders								
T_{LOGI3}	Fold-back NAND delay	-	2.0	-	2.5	-	3.0	ns
T_{UDA}	Universal delay	-	2.0	-	2.5	-	3.0	ns
T_{SLEW}	Slew rate limited delay	-	4.0	-	5.0	-	6.0	ns

Notes:
1. These parameters guaranteed by design and/or characterization, not testing.
2. See the CoolRunner XPLA3 family data sheet (**DS012**) for the timing model.

Switching Characteristics

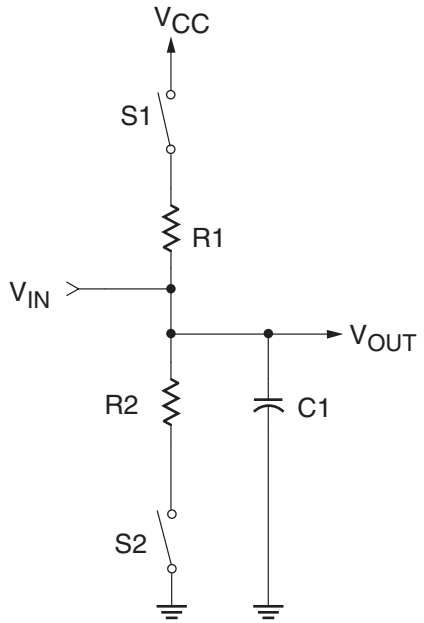

Component	Values
R1	390Ω
R2	390Ω
C1	35 pF

Measurement	S1	S2
T_{POE} (High)	Open	Closed
T_{POE} (Low)	Closed	Open
T_P	Closed	Closed

Note: For T_{POD}, C1 = 5 pF. Delay measured at output level of V_{OL} + 300 mV, V_{OH} – 300 mV.

DS013_03_102401

Figure 3: **AC Load Circuit**

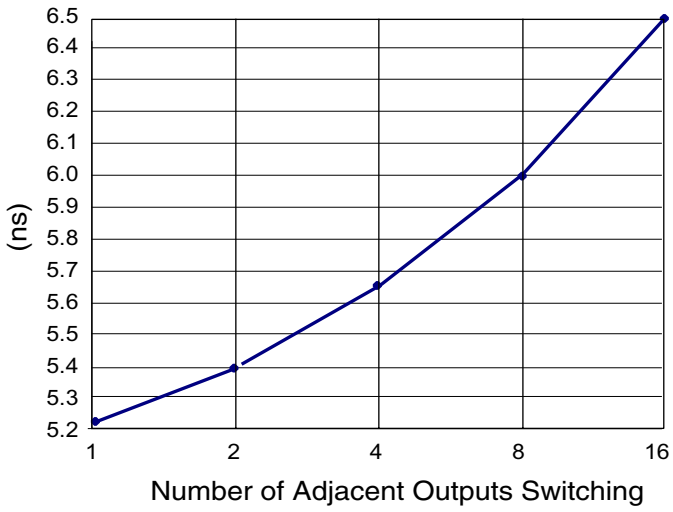

DS013_04_042800

Figure 4: **Derating Curve for T_{PD2}**

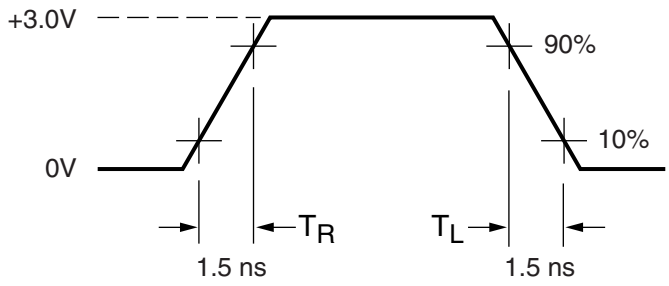

Measurements:
All circuit delays are measured at the +1.5V level of inputs and outputs, unless otherwise specified.

DS017_05_042800

Figure 5: **Voltage Waveform**

Pin Descriptions

Table 2: **XCR3256XL User I/O Pins**

	TQ144	PQ208	FT256	CS280
Total User I/O Pins	120	164	164	164

Table 3: **XCR3256XL I/O Pins**

Function Block	Macro-cell	TQ144	PQ208	FT256	CS280
1	1	106	6	C16	E18
1	2	-	7	F12	E19
1	3	104(1)	8	D16	F15
1	4	103	9	E14	F17
1	5	102	10	E15	F18
1	6	-	-	-	-
1	7	-	-	-	-
1	8	-	-	-	-
1	9	-	-	-	-
1	10	-	-	-	-
1	11	-	-	-	-
1	12	101	11	F13	F19
1	13	100	12	E16	G16
1	14	99	13	F14	G17
1	15	-	15	F15	G19
1	16	-	16	G12	H16
2	1	107	4	E13	B19
2	2	108	3	D15	B18
2	3	-	206	C13	B17
2	4	-	205	A14	A18
2	5	109	204	E11	A17
2	6	-	-	-	-
2	7	-	-	-	-
2	8	-	-	-	-
2	9	-	-	-	-
2	10	-	-	-	-
2	11	-	-	-	-
2	12	110	203	A13	C16
2	13	111	202	D12	A16
2	14	-	201	B13	E15
2	15	112	199	C12	D15
2	16	113	198	A12	A15
3	1	98	17	G15	H17
3	2	97	18	G13	H18
3	3	96	19	F16	H19
3	4	94	20	G14	J16
3	5	93	21	G16	J17
3	6	-	-	-	-
3	7	-	-	-	-
3	8	-	-	-	-
3	9	-	-	-	-
3	10	-	-	-	-
3	11	-	-	-	-
3	12	92	22	H13	J18
3	13	-	24	H12	K16
3	14	91	25	H15	K17
3	15	90	26	H14	K18
3	16	-	27	H16	L16
4	1	114	197	D11	E14
4	2	116	196	A11	D14
4	3	117	195	E10	A14
4	4	-	194	B12	C13
4	5	118	193	C11	B13
4	6	-	-	-	-
4	7	-	-	-	-
4	8	-	-	-	-
4	9	-	-	-	-
4	10	-	-	-	-
4	11	-	-	-	-
4	12	119	192	B11	A13
4	13	120	190	A10	A12
4	14	121	189(1)	C10(1)	C12(1)
4	15	-	188	A9	B12
4	16	122	187	D9	D12
5	1	89(1)	28	J14	L17
5	2	-	29	J15	L18
5	3	88	30(1)	J13(1)	L19(1)
5	4	87	31	J16	M16
5	5	86	33	L14	M18

Table 3: **XCR3256XL I/O Pins *(Continued)***

Function Block	Macro-cell	TQ144	PQ208	FT256	CS280
5	6	-	-	-	-
5	7	-	-	-	-
5	8	-	-	-	-
5	9	-	-	-	-
5	10	-	-	-	-
5	11	-	-	-	-
5	12	84	34	K15	M17
5	13	-	35	K14	N16
5	14	83	36	K16	N19
5	15	82	37	K13	N18
5	16	-	38	L15	N17
6	1	-	78	R9	U10
6	2	55	77	N9	T10
6	3	56	76	T10	W11
6	4	-	73	P10	U11
6	5	60	71	R10	T11
6	6	-	-	-	-
6	7	-	-	-	-
6	8	-	-	-	-
6	9	-	-	-	-
6	10	-	-	-	-
6	11	-	-	-	-
6	12	61	70	T11	W12
6	13	62	69	N10	U12
6	14	63	68	P11	T12
6	15	-	67	M10	V13
6	16	65	66	R11	U13
7	1	81	39	K12	P16
7	2	-	40	L16	P18
7	3	80	42	M15	R19
7	4	79	43	N15	R16
7	5	78	44	L13	R18
7	6	-	-	-	-
7	7	-	-	-	-
7	8	-	-	-	-
7	9	-	-	-	-
7	10	-	-	-	-

Table 3: **XCR3256XL I/O Pins *(Continued)***

Function Block	Macro-cell	TQ144	PQ208	FT256	CS280
7	11	-	-	-	-
7	12	77	45	M16	R17
7	13	-	46	M14	R15
7	14	75	47	N16	T17
7	15	74	48	L12	T16
7	16	-	49	P15	U19
8	1	66	65	T12	T13
8	2	67	64	R12	W14
8	3	68	62	N11	T14
8	4	69	61	T13	R14
8	5	-	60	P12	W15
8	6	-	-	-	-
8	7	-	-	-	-
8	8	-	-	-	-
8	9	-	-	-	-
8	10	-	-	-	-
8	11	-	-	-	-
8	12	70	59	R13	U15
8	13	-	58	M11	V15
8	14	71	57	T14	T15
8	15	-	56	N12	V16
8	16	72	55	R14	W17
9	1	2	153	D3	B1
9	2	1	154	C1	C3
9	3	-	159	B4	A4
9	4	-	160	E6	B5
9	5	143	161	A4	C5
9	6	-	-	-	-
9	7	-	-	-	-
9	8	-	-	-	-
9	9	-	-	-	-
9	10	-	-	-	-
9	11	-	-	-	-
9	12	-	162	C5	A5
9	13	142	163	B5	E6
9	14	141	164	D6	D6
9	15	140	166	A5	B6

Table 3: **XCR3256XL I/O Pins *(Continued)***

Function Block	Macro-cell	TQ144	PQ208	FT256	CS280
9	16	139	167	C6	A6
10	1	4(1)	151	D1	D2
10	2	-	150	E4	D1
10	3	5	149	D2	E3
10	4	6	148	E3	E2
10	5	7	147	E1	E4
10	6	-	-	-	-
10	7	-	-	-	-
10	8	-	-	-	-
10	9	-	-	-	-
10	10	-	-	-	-
10	11	-	-	-	-
10	12	8	146	F4	E1
10	13	-	145	F1	F5
10	14	9	144	G5	F3
10	15	10	142	E2	F4
10	16	11	141	F3	G3
11	1	-	168	B6	D7
11	2	-	169	E7	C7
11	3	138	170	A6	B7
11	4	-	171	D7	A7
11	5	137	172	B7	C8
11	6	-	-	-	-
11	7	-	-	-	-
11	8	-	-	-	-
11	9	-	-	-	-
11	10	-	-	-	-
11	11	-	-	-	-
11	12	136	173	C7	B8
11	13	134	175	C8	C9
11	14	133	176(1)	A7(1)	B9(1)
11	15	132	177	D8	D10
11	16	131	178	B8	C10
12	1	-	140	F2	G2
12	2	-	139	G4	G1
12	3	12	138	G1	G4
12	4	14	137	H1	H1

Table 3: **XCR3256XL I/O Pins *(Continued)***

Function Block	Macro-cell	TQ144	PQ208	FT256	CS280
12	5	15	136	H4	H3
12	6	-	-	-	-
12	7	-	-	-	-
12	8	-	-	-	-
12	9	-	-	-	-
12	10	-	-	-	-
12	11	-	-	-	-
12	12	16	135	G2	H2
12	13	-	133	J1	J2
12	14	18	132	J3	J3
12	15	19	131	H2	K2
12	16	-	130	J5	K3
13	1	-	79	P9	W10
13	2	54	80	T9	T9
13	3	53	81	P8	U9
13	4	-	84	R8	T8
13	5	49	86	N8	T7
13	6	-	-	-	-
13	7	-	-	-	-
13	8	-	-	-	-
13	9	-	-	-	-
13	10	-	-	-	-
13	11	-	-	-	-
13	12	48	87	T8	W7
13	13	47	88	P7	V7
13	14	46	89	R7	U7
13	15	-	90	P6	W6
13	16	45	91	T7	T6
14	1	20(1)	129	J2	K4
14	2	-	128	J4	L1
14	3	21	127(1)	K1(1)	L2(1)
14	4	22	126	K3	L3
14	5	23	124	K2	M1
14	6	-	-	-	-
14	7	-	-	-	-
14	8	-	-	-	-
14	9	-	-	-	-

Table 3: **XCR3256XL I/O Pins *(Continued)***

Function Block	Macro-cell	TQ144	PQ208	FT256	CS280
14	10	-	-	-	-
14	11	-	-	-	-
14	12	25	123	L1	M3
14	13	-	122	K4	M4
14	14	26	121	L3	N1
14	15	27	120	K5	N2
14	16	28	119	M1	N3
15	1	44	92	N7	V6
15	2	43	93	R6	U6
15	3	42	95	M7	R6
15	4	41	96	T5	W5
15	5	40	97	T6	T5
15	6	-	-	-	-
15	7	-	-	-	-
15	8	-	-	-	-
15	9	-	-	-	-
15	10	-	-	-	-
15	11	-	-	-	-
15	12	-	98	R5	V5
15	13	39	99	N6	U5
15	14	38	100	T4	W4
15	15	-	101	P5	U4
15	16	37	102	R4	W3
16	1	-	118	L2	P1
16	2	-	117	M2	P2
16	3	29	115	M3	P4
16	4	30	114	N2	R3
16	5	31	113	L5	R2
16	6	-	-	-	-
16	7	-	-	-	-
16	8	-	-	-	-
16	9	-	-	-	-
16	10	-	-	-	-
16	11	-	-	-	-
16	12	32	112	P1	R4
16	13	-	111	M4	T3
16	14	34	110	R1	U1

Table 3: **XCR3256XL I/O Pins *(Continued)***

Function Block	Macro-cell	TQ144	PQ208	FT256	CS280
16	15	35	109	N3	V1
16	16	36	108	T1	U2

Notes:
1. JTAG pins.

Table 4: **XCR3256XL Global, JTAG, Port Enable, Power, and No Connect Pins**

Pin Type	TQ144	PQ208	FT256	CS280
IN0 / CLK0	128	181	B9	A10
IN1 / CLK1	127	182	A8	D11
IN2 / CLK2	126	183	C9	C11
IN3 / CLK3	125	184	B10	B11
TCK	89	30	J13	L19
TDI	4	176	A7	B9
TDO	104	189	C10	C12
TMS	20	127	K1	L2
PORT_EN	13(1)	116(1)	N1(1)	P3(1)
Vcc	24, 50, 51, 58, 73, 76, 95, 115, 123, 130, 144	5, 23, 41, 63, 74, 83, 85, 107, 125, 143, 165, 179, 186, 191	E8, E9, F7, F8, F9, F10, G6, G11, H5, H6, H11, J6, J11, J12, K6, K11, L7, L8, L9, L10, M8, M9	A11, B10, C6, C14, D13, D17, F2, J19, L4, P15, T18, U8, U14, V2, V9, V11
GND	3, 17, 33, 52, 57, 59, 64, 85, 105, 124, 129, 135	14, 32, 50, 72, 75, 82, 94, 134, 152, 174, 180, 185, 200	E5, F6, F11, G7, G8, G9, G10, H7, H8, H9, H10, J7, J8, J9, J10, K7, K8, K9, K10, L6, L11	E5, E7, E8, E9, E10, E11, E12, E13, G5, G15, H5, H15, J5, J15, K5, K15, L5, L15, M5, M15, N5, N15, R7, R8, R9, R10, R11, R12, R13
No Connects	-	1, 2, 51, 52, 53, 54, 103, 104, 105, 106, 155, 156, 157, 158, 207, 208	A1, A2, A3, A15, A16, B1, B2, B3, B14, B15, B16, C2, C3, C4, C14, C15, D4, D5, D10, D13, D14, E12, F5, G3, H3, L4, M5, M6, M12, M13, N4, N5, N13, N14, P2, P3, P4, P13, P14, P16, R2, R3, R15, R16, T2, T3, T15, T16	A1, A2, A3, A8, A9, A19, B2, B3, B4, B14, B15, B16, C1, C2, C4, C15, C17, C18, C19, D3, D4, D5, D8, D9, D16, D18, D19, E16, E17, F1, F16, G18, H4, J1, J4, K1, K19, M2, M19, N4, P5, P17, P19, R1, R5, T1, T2, T4, T19, U3, U16, U17, U18, V3, V4, V8, V10, V12, V14, V17, V18, V19, W1, W2, W8, W9, W13, W16, W18, W19

Notes:
1. Port Enable is brought High to enable JTAG pins when JTAG pins are used as I/O. See family data sheet (DS012) for full explanation.

Device Part Marking and Ordering Combination Information

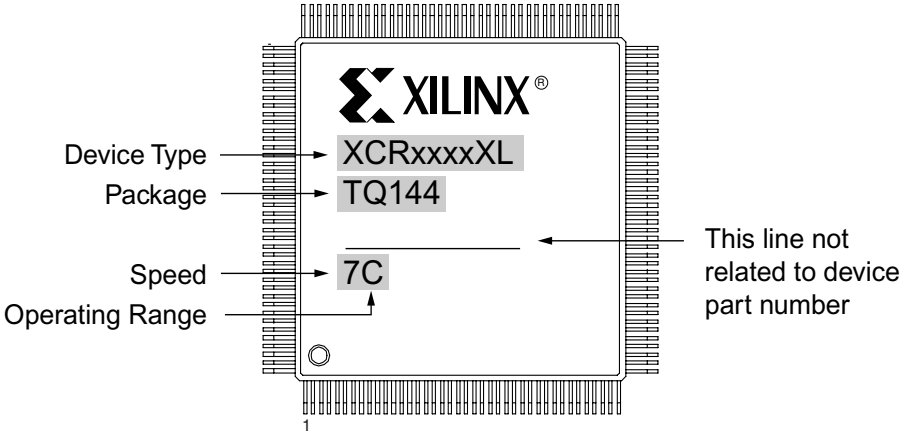

Sample package with part marking.

Device Ordering and Part Marking Number	Speed (pin-to-pin delay)	Pkg. Symbol	No. of Pins	Package Type	Operating Range(1)
XCR3256XL-7TQ144C	7.5 ns	TQ144	144-pin	Thin Quad Flat Pack (TQFP)	C
XCR3256XL-7TQG144C	7.5 ns	TQG144	144-pin	Thin Quad Flat Pack (TQFP); Pb-Free	C
XCR3256XL-7PQ208C	7.5 ns	PQ208	208-pin	Plastic Quad Flat Pack (PQFP)	C
XCR3256XL-7PQG208C	7.5 ns	PQG208	208-pin	Plastic Quad Flat Pack (PQFP); Pb-Free	C
XCR3256XL-7FT256C	7.5 ns	FT256	256-ball	Fine-Pitch BGA (FT)	C
XCR3256XL-7CS280C	7.5 ns	CS280	280-ball	Chip Scale Package (CSP)	C
XCR3256XL-7CSG280C	7.5 ns	CSG280	280-ball	Chip Scale Package (CSP); Pb-Free	C
XCR3256XL-10TQ144C	10 ns	TQ144	144-pin	Thin Quad Flat Pack (TQFP)	C
XCR3256XL-10TQG144C	10 ns	TQG144	144-pin	Thin Quad Flat Pack (TQFP); Pb-Free	C
XCR3256XL-10PQ208C	10 ns	PQ208	208-pin	Plastic Quad Flat Pack (PQFP)	C
XCR3256XL-10PQG208C	10 ns	PQG208	208-pin	Plastic Quad Flat Pack (PQFP); Pb-Free	C
XCR3256XL-10FT256C	10 ns	FT256	256-ball	Fine-Pitch BGA (FT)	C
XCR3256XL-10CS280C	10 ns	CS280	280-ball	Chip Scale Package (CSP)	C
XCR3256XL-10CSG280C	10 ns	CSG280	280-ball	Chip Scale Package (CSP); Pb-Free	C
XCR3256XL-10TQ144I	10 ns	TQ144	144-pin	Thin Quad Flat Pack (TQFP)	I
XCR3256XL-10TQG144I	10 ns	TQG144	144-pin	Thin Quad Flat Pack (TQFP); Pb-Free	I
XCR3256XL-10PQ208I	10 ns	PQ208	208-pin	Plastic Quad Flat Pack (PQFP)	I
XCR3256XL-10PQG208I	10 ns	PQG208	208-pin	Plastic Quad Flat Pack (PQFP); Pb-Free	I
XCR3256XL-10FT256I	10 ns	FT256	256-ball	Fine-Pitch BGA (FT)	I
XCR3256XL-10CS280I	10 ns	CS280	280-ball	Chip Scale Package (CSP)	I
XCR3256XL-10CSG280I	10 ns	CSG280	280-ball	Chip Scale Package (CSP); Pb-Free	I
XCR3256XL-12TQ144C	12 ns	TQ144	144-pin	Thin Quad Flat Pack (TQFP)	C
XCR3256XL-12TQG144C	12 ns	TQG144	144-pin	Thin Quad Flat Pack (TQFP); Pb-Free	C
XCR3256XL-12PQ208C	12 ns	PQ208	208-pin	Plastic Quad Flat Pack (PQFP)	C
XCR3256XL-12PQG208C	12 ns	PQG208	208-pin	Plastic Quad Flat Pack (PQFP); Pb-Free	C

XCR3256XL-12TQ144C Xilinx Inc. IC CPLD 256MC 10.8NS 144TQFP

Device Ordering and Part Marking Number	Speed (pin-to-pin delay)	Pkg. Symbol	No. of Pins	Package Type	Operating Range(1)
XCR3256XL-12FT256C	12 ns	FT256	256-ball	Fine-Pitch BGA (FT)	C
XCR3256XL-12CS280C	12 ns	CS280	280-ball	Chip Scale Package (CSP)	C
XCR3256XL-12CSG280C	12 ns	CSG280	280-ball	Chip Scale Package (CSP); Pb-Free	C
XCR3256XL-12TQ144I	12 ns	TQ144	144-pin	Thin Quad Flat Pack (TQFP)	I
XCR3256XL-12TQG144I	12 ns	TQG144	144-pin	Thin Quad Flat Pack (TQFP); Pb-Free	I
XCR3256XL-12PQ208I	12 ns	PQ208	208-pin	Plastic Quad Flat Pack (PQFP)	I
XCR3256XL-12PQG208I	12 ns	PQG208	208-pin	Plastic Quad Flat Pack (PQFP); Pb-Free	I
XCR3256XL-12FT256I	12 ns	FT256	256-ball	Fine-Pitch BGA (FT)	I
XCR3256XL-12CS280I	12 ns	CS280	280-ball	Chip Scale Package (CSP)	I
XCR3256XL-12CSG280I	12 ns	CSG280	280-ball	Chip Scale Package (CSP); Pb-Free	I

Notes:
1. C = Commercial: T_A = 0° to +70°C; I = Industrial: T_A = –40° to +85°C

Warranty Disclaimer

THESE PRODUCTS ARE SUBJECT TO THE TERMS OF THE XILINX LIMITED WARRANTY WHICH CAN BE VIEWED AT http://www.xilinx.com/warranty.htm. THIS LIMITED WARRANTY DOES NOT EXTEND TO ANY USE OF THE PRODUCTS IN AN APPLICATION OR ENVIRONMENT THAT IS NOT WITHIN THE SPECIFICATIONS STATED ON THE THEN-CURRENT XILINX DATA SHEET FOR THE PRODUCTS. PRODUCTS ARE NOT DESIGNED TO BE FAIL-SAFE AND ARE NOT WARRANTED FOR USE IN APPLICATIONS THAT POSE A RISK OF PHYSICAL HARM OR LOSS OF LIFE. USE OF PRODUCTS IN SUCH APPLICATIONS IS FULLY AT THE RISK OF CUSTOMER SUBJECT TO APPLICABLE LAWS AND REGULATIONS.

Additional Information

CoolRunner XPLA3 Data Sheets and Application Notes **Device Packages**

Device Package User Guide

Revision History

The following table shows the revision history for this document

Date	Version	Revision
01/21/00	1.0	Initial Xilinx release.
02/10/00	1.1	Updated Pinout table.
05/03/00	1.2	Minor updates and added Boundary Scan to pinout table.
11/20/00	1.3	Updated pinout tables; corrected note in Table 4 to read: "port enable pin is brought High".
12/11/00	1.4	Updated specifications and pinout tables.
01/17/01	1.5	Removed Timing Model.
03/05/01	1.6	Added 256-ball Fine-Pitch Ball Grid Array Package.
04/11/01	1.7	Added Typical I/V curve, Figure 2; added Table 2: Total User I/O; changed V_{OH} spec.
04/19/01	1.8	Updated Typical I/V curve, Figure 2: added voltage levels.

Date	Version	Revision
01/08/02	1.9	Moved ICC vs Freq. Figure 1 and Table 1 to page 1. Added single p-term setup time (T_{SU1}) to AC Table, renamed T_{SU} to T_{SU2} for setup time through the OR array. Updated T_{SUF} spec to match software timing. Added T_{INIT} spec. Updated T_{CONFIG} spec. Updated T_{HI} spec to correct a typo. Updated AC Load Circuit diagram to more closely resemble true test conditions, added note for T_{POD} delay measurement.
11/20/02	2.0	Updated T_{PCO} (added T_{PTCK}), T_{FIN}, and T_{OUT} to match timing model and software. Updated the following specs based on characterization of product after move to UMC fabrication: f_{SYSTEM}, V_{OH},T_{CONFIG}, T_{INIT}, T_{LOGI3}, T_F. Updated Typical I_{CC} vs. Freq. and Derating Curve for T_{PD2} (improved to 6.5 ns for 16 outputs switching) per new characterization data. Updated ordering information to new format.
01/27/03	2.1	Moved incorrect note for V_{OH} to line 2 from line 3 in DC table.
07/15/03	2.2	Updated test conditions for I_{IL} and I_{IH}.
08/21/03	2.3	Updated Package Device Marking Pin 1 orientation.
11/5/03	2.4	Updated from Preliminary Product Specification to Product Specification.
02/13/04	2.5	Add Tsol specification. Add links to application notes and data sheets.
04/08/05	2.6	Added I_{CCSB} Typical and T_{APRPW} specifications. Removed T_{SOL} specification.
03/31/06	2.7	Added Warranty Disclaimer. Added Pb-Free ordering information.

FPGAMALL
Authorized Distributor

OUR CERTIFICATE

A long-term cooperative relationship can be built between global customers and us by providing excellent products

Business Type	Trading Company, Distributor/Wholesaler
Main Products	Electronic Integrated Circuit
Certifications	ISO9001
Total Annual Revenue	US$2.5 Million - US$5 Million
Country / Region	Hongkong, China
Total Employees	100 - 200 People
Year Established	2018
Main Markets	North America South Asia Western Europe

sales@fpgamall.com +00852-56428680