https://www.fpgamall.com

THE DATASHEET OF FPGA

Product Obsolete/Under Obsolescence
XCV200-4FG256C Xilinx Inc. IC FPGA 176 I/O 256FBGA

Virtex™ 2.5 V Field Programmable Gate Arrays

DS003-1 (v4.0) March 1, 2013 **Product Specification**

Features

- Fast, high-density Field Programmable Gate Arrays
  - Densities from 50k to 1M system gates
  - System performance up to 200 MHz
  - 66-MHz PCI Compliant
  - Hot-swappable for Compact PCI
- Multi-standard SelectIO™ interfaces
  - 16 high-performance interface standards
  - Connects directly to ZBTRAM devices
- Built-in clock-management circuitry
  - Four dedicated delay-locked loops (DLLs) for advanced clock control
  - Four primary low-skew global clock distribution nets, plus 24 secondary local clock nets
- Hierarchical memory system
  - LUTs configurable as 16-bit RAM, 32-bit RAM, 16-bit dual-ported RAM, or 16-bit Shift Register
  - Configurable synchronous dual-ported 4k-bit RAMs
  - Fast interfaces to external high-performance RAMs
- Flexible architecture that balances speed and density
  - Dedicated carry logic for high-speed arithmetic
  - Dedicated multiplier support
  - Cascade chain for wide-input functions
  - Abundant registers/latches with clock enable, and dual synchronous/asynchronous set and reset
  - Internal 3-state bussing
  - IEEE 1149.1 boundary-scan logic
  - Die-temperature sensor diode
- Supported by FPGA Foundation™ and Alliance Development Systems
  - Complete support for Unified Libraries, Relationally Placed Macros, and Design Manager
  - Wide selection of PC and workstation platforms
- SRAM-based in-system configuration
  - Unlimited re-programmability
  - Four programming modes
- 0.22 µm 5-layer metal process
- 100% factory tested

Description

The Virtex FPGA family delivers high-performance, high-capacity programmable logic solutions. Dramatic increases in silicon efficiency result from optimizing the new architecture for place-and-route efficiency and exploiting an aggressive 5-layer-metal 0.22 µm CMOS process. These advances make Virtex FPGAs powerful and flexible alternatives to mask-programmed gate arrays. The Virtex family comprises the nine members shown in Table 1.

Building on experience gained from previous generations of FPGAs, the Virtex family represents a revolutionary step forward in programmable logic design. Combining a wide variety of programmable system features, a rich hierarchy of fast, flexible interconnect resources, and advanced process technology, the Virtex family delivers a high-speed and high-capacity programmable logic solution that enhances design flexibility while reducing time-to-market.

Table 1: **Virtex Field Programmable Gate Array Family Members**

Device	System Gates	CLB Array	Logic Cells	Maximum Available I/O	Block RAM Bits	Maximum SelectRAM+™ Bits
XCV50	57,906	16x24	1,728	180	32,768	24,576
XCV100	108,904	20x30	2,700	180	40,960	38,400
XCV150	164,674	24x36	3,888	260	49,152	55,296
XCV200	236,666	28x42	5,292	284	57,344	75,264
XCV300	322,970	32x48	6,912	316	65,536	98,304
XCV400	468,252	40x60	10,800	404	81,920	153,600
XCV600	661,111	48x72	15,552	512	98,304	221,184
XCV800	888,439	56x84	21,168	512	114,688	301,056
XCV1000	1,124,022	64x96	27,648	512	131,072	393,216

© 2001-2013 Xilinx, Inc. All rights reserved. All Xilinx trademarks, registered trademarks, patents, and disclaimers are as listed at http://www.xilinx.com/legal.htm. All other trademarks and registered trademarks are the property of their respective owners. All specifications are subject to change without notice.

Product Obsolete/Under Obsolescence
XCV200-4FG256C Xilinx Inc. IC FPGA 176 I/O 256FBGA

Virtex Architecture

Virtex devices feature a flexible, regular architecture that comprises an array of configurable logic blocks (CLBs) surrounded by programmable input/output blocks (IOBs), all interconnected by a rich hierarchy of fast, versatile routing resources. The abundance of routing resources permits the Virtex family to accommodate even the largest and most complex designs.

Virtex FPGAs are SRAM-based, and are customized by loading configuration data into internal memory cells. In some modes, the FPGA reads its own configuration data from an external PROM (master serial mode). Otherwise, the configuration data is written into the FPGA (SelectMAP™, slave serial, and JTAG modes).

The standard Xilinx Foundation™ and Alliance Series™ Development systems deliver complete design support for Virtex, covering every aspect from behavioral and schematic entry, through simulation, automatic design translation and implementation, to the creation, downloading, and readback of a configuration bit stream.

Higher Performance

Virtex devices provide better performance than previous generations of FPGA. Designs can achieve synchronous system clock rates up to 200 MHz including I/O. Virtex inputs and outputs comply fully with PCI specifications, and interfaces can be implemented that operate at 33 MHz or 66 MHz. Additionally, Virtex supports the hot-swapping requirements of Compact PCI.

Xilinx thoroughly benchmarked the Virtex family. While performance is design-dependent, many designs operated internally at speeds in excess of 100 MHz and can achieve 200 MHz. Table 2 shows performance data for representative circuits, using worst-case timing parameters.

Table 2: **Performance for Common Circuit Functions**

Function	Bits	Virtex -6
Register-to-Register		
Adder	16	5.0 ns
	64	7.2 ns
Pipelined Multiplier	8 x 8	5.1 ns
	16 x 16	6.0 ns
Address Decoder	16	4.4 ns
	64	6.4 ns
16:1 Multiplexer		5.4 ns
Parity Tree	9	4.1 ns
	18	5.0 ns
	36	6.9 ns
Chip-to-Chip		
HSTL Class IV		200 MHz
LVTTL,16mA, fast slew		180 MHz

Product Obsolete/Under Obsolescence
XCV200-4FG256C Xilinx Inc. IC FPGA 176 I/O 256FBGA

Virtex Device/Package Combinations and Maximum I/O

Table 3: **Virtex Family Maximum User I/O by Device/Package (Excluding Dedicated Clock Pins)**

Package	XCV50	XCV100	XCV150	XCV200	XCV300	XCV400	XCV600	XCV800	XCV1000
CS144	94	94							
TQ144	98	98							
PQ240	166	166	166	166	166				
HQ240						166	166	166	
BG256	180	180	180	180					
BG352			260	260	260				
BG432					316	316	316	316	
BG560						404	404	404	404
FG256	176	176	176	176					
FG456			260	284	312				
FG676						404	444	444	
FG680							512	512	512

Virtex Ordering Information

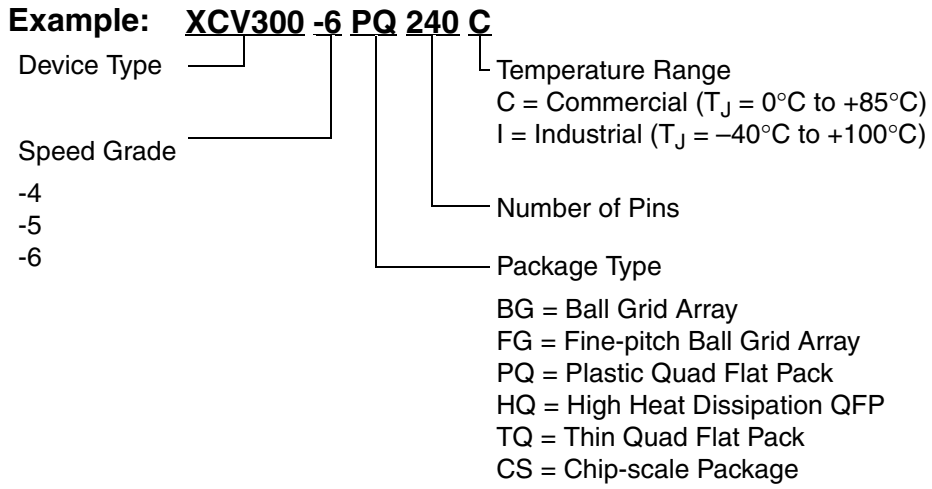

Figure 1: **Virtex Ordering Information**

Product Obsolete/Under Obsolescence
XCV200-4FG256C Xilinx Inc. IC FPGA 176 I/O 256FBGA

Revision History

Date	Version	Revision
11/98	1.0	Initial Xilinx release.
01/99-02/99	1.2-1.3	Both versions updated package drawings and specs.
05/99	1.4	Addition of package drawings and specifications.
05/99	1.5	Replaced FG 676 & FG680 package drawings.
07/99	1.6	Changed Boundary Scan Information and changed Figure 11, Boundary Scan Bit Sequence. Updated IOB Input & Output delays. Added Capacitance info for different I/O Standards. Added 5 V tolerant information. Added DLL Parameters and waveforms and new Pin-to-pin Input and Output Parameter tables for Global Clock Input to Output and Setup and Hold. Changed Configuration Information including Figures 12, 14, 17 & 19. Added device-dependent listings for quiescent currents ICCINTQ and ICCOQ. Updated IOB Input and Output Delays based on default standard of LVTTL, 12 mA, Fast Slew Rate. Added IOB Input Switching Characteristics Standard Adjustments.
09/99	1.7	Speed grade update to preliminary status, Power-on specification and Clock-to-Out Minimums additions, “0” hold time listing explanation, quiescent current listing update, and Figure 6 ADDRA input label correction. Added T_{IJITCC} parameter, changed T_{OJIT} to T_{OPHASE}.
01/00	1.8	Update to speed.txt file 1.96. Corrections for CRs 111036,111137, 112697, 115479, 117153, 117154, and 117612. Modified notes for Recommended Operating Conditions (voltage and temperature). Changed Bank information for V_{CCO} in CS144 package on p.43.
01/00	1.9	Updated DLL Jitter Parameter table and waveforms, added Delay Measurement Methodology table for different I/O standards, changed buffered Hex line info and Input/Output Timing measurement notes.
03/00	2.0	New TBCKO values; corrected FG680 package connection drawing; new note about status of CCLK pin after configuration.
05/00	2.1	Modified “Pins not listed...” statement. Speed grade update to Final status.
05/00	2.2	Modified Table 18.
09/00	2.3	• Added XCV400 values to table under **Minimum Clock-to-Out for Virtex Devices**. • Corrected Units column in table under **IOB Input Switching Characteristics**. • Added values to table under **CLB SelectRAM Switching Characteristics**.
10/00	2.4	• Corrected Pinout information for devices in the BG256, BG432, and BG560 packages in Table 18. • Corrected **BG256 Pin Function Diagram**.
04/01	2.5	• Revised minimums for **Global Clock Set-Up and Hold for LVTTL Standard, with DLL**. • Converted file to modularized format. See **Virtex Data Sheet** section.
03/13	4.0	The products listed in this data sheet are obsolete. See **XCN10016** for further information.

Virtex Data Sheet

The Virtex Data Sheet contains the following modules:

- DS003-1, Virtex 2.5V FPGAs: Introduction and Ordering Information (Module 1)
- DS003-2, Virtex 2.5V FPGAs: Functional Description (Module 2)
- DS003-3, Virtex 2.5V FPGAs: DC and Switching Characteristics (Module 3)
- DS003-4, Virtex 2.5V FPGAs: Pinout Tables (Module 4)

Product Obsolete/Under Obsolescence
XCV200-4FG256C Xilinx Inc. IC FPGA 176 I/O 256FBGA

Virtex™ 2.5 V Field Programmable Gate Arrays

DS003-2 (v4.0) March 1, 2013

Product Specification

Architectural Description

Virtex Array

The Virtex user-programmable gate array, shown in Figure 1, comprises two major configurable elements: configurable logic blocks (CLBs) and input/output blocks (IOBs).

- CLBs provide the functional elements for constructing logic
- IOBs provide the interface between the package pins and the CLBs

CLBs interconnect through a general routing matrix (GRM). The GRM comprises an array of routing switches located at the intersections of horizontal and vertical routing channels. Each CLB nests into a VersaBlock™ that also provides local routing resources to connect the CLB to the GRM.

The VersaRing™ I/O interface provides additional routing resources around the periphery of the device. This routing improves I/O routability and facilitates pin locking.

The Virtex architecture also includes the following circuits that connect to the GRM.

- Dedicated block memories of 4096 bits each
- Clock DLLs for clock-distribution delay compensation and clock domain control
- 3-State buffers (BUFTs) associated with each CLB that drive dedicated segmentable horizontal routing resources

Values stored in static memory cells control the configurable logic elements and interconnect resources. These values load into the memory cells on power-up, and can reload if necessary to change the function of the device.

Input/Output Block

The Virtex IOB, Figure 2, features SelectIO™ inputs and outputs that support a wide variety of I/O signalling standards, see Table 1.

The three IOB storage elements function either as edge-triggered D-type flip-flops or as level sensitive latches. Each IOB has a clock signal (CLK) shared by the three flip-flops and independent clock enable signals for each flip-flop.

In addition to the CLK and CE control signals, the three flip-flops share a Set/Reset (SR). For each flip-flop, this signal can be independently configured as a synchronous Set, a synchronous Reset, an asynchronous Preset, or an asynchronous Clear.

The output buffer and all of the IOB control signals have independent polarity controls.

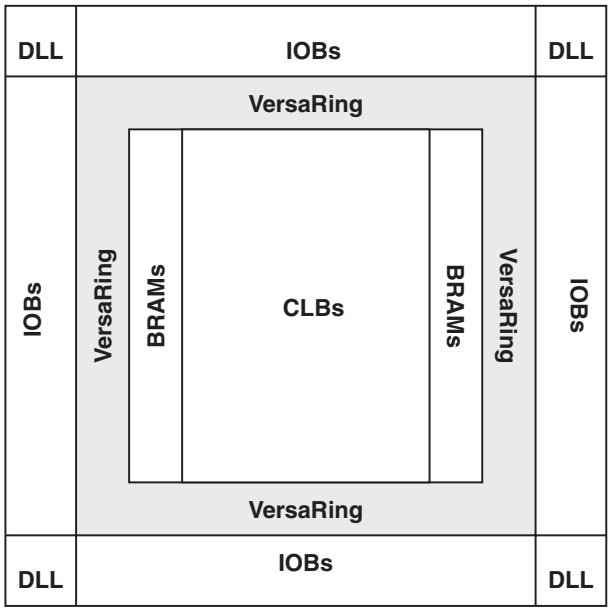

Figure 1: **Virtex Architecture Overview**

All pads are protected against damage from electrostatic discharge (ESD) and from over-voltage transients. Two forms of over-voltage protection are provided, one that permits 5 V compliance, and one that does not. For 5 V compliance, a Zener-like structure connected to ground turns on when the output rises to approximately 6.5 V. When PCI 3.3 V compliance is required, a conventional clamp diode is connected to the output supply voltage, V_{CCO}.

Optional pull-up and pull-down resistors and an optional weak-keeper circuit are attached to each pad. Prior to configuration, all pins not involved in configuration are forced into their high-impedance state. The pull-down resistors and the weak-keeper circuits are inactive, but inputs can optionally be pulled up.

The activation of pull-up resistors prior to configuration is controlled on a global basis by the configuration mode pins. If the pull-up resistors are not activated, all the pins will float. Consequently, external pull-up or pull-down resistors must be provided on pins required to be at a well-defined logic level prior to configuration.

All Virtex IOBs support IEEE 1149.1-compatible boundary scan testing.

© 1999-2013 Xilinx, Inc. All rights reserved. All Xilinx trademarks, registered trademarks, patents, and disclaimers are as listed at http://www.xilinx.com/legal.htm. All other trademarks and registered trademarks are the property of their respective owners. All specifications are subject to change without notice.

Product Obsolete/Under Obsolescence
XCV200-4FG256C Xilinx Inc. IC FPGA 176 I/O 256FBGA

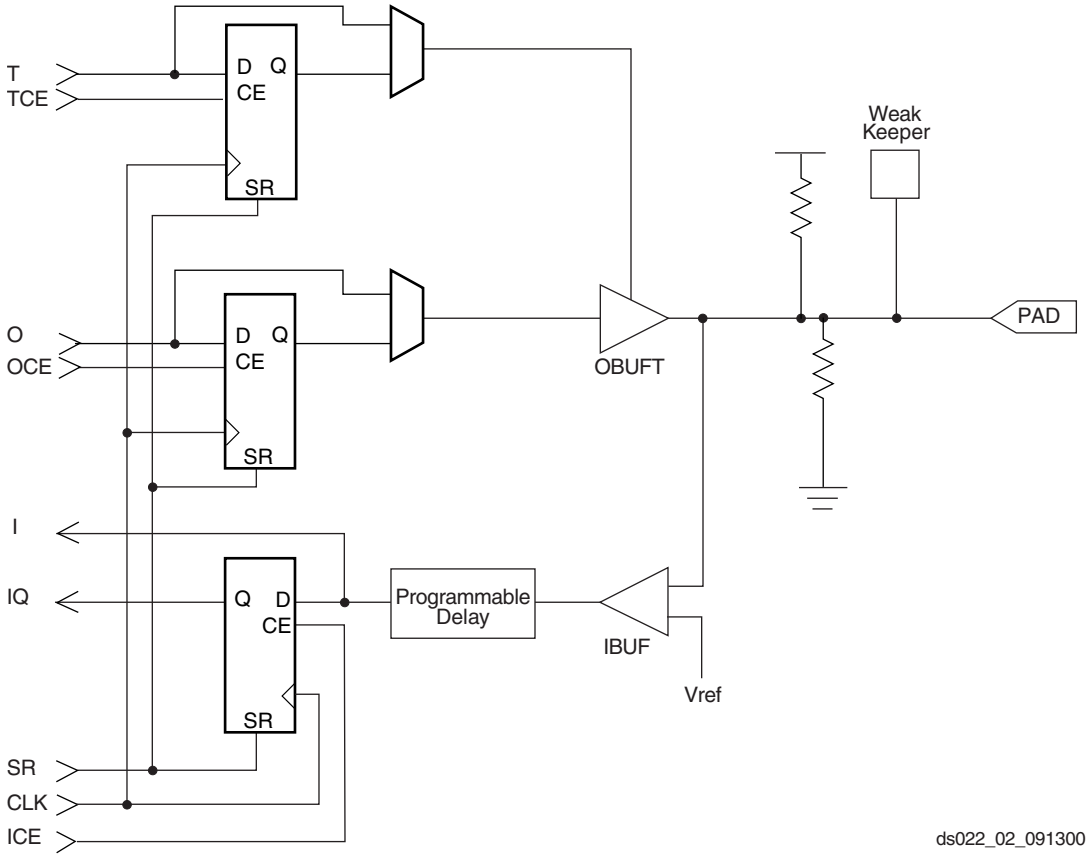

Figure 2: **Virtex Input/Output Block (IOB)**

Table 1: **Supported Select I/O Standards**

I/O Standard	Input Reference Voltage (V_{REF})	Output Source Voltage (V_{CCO})	Board Termination Voltage (V_{TT})	5 V Tolerant
LVTTL 2 – 24 mA	N/A	3.3	N/A	Yes
LVCMOS2	N/A	2.5	N/A	Yes
PCI, 5 V	N/A	3.3	N/A	Yes
PCI, 3.3 V	N/A	3.3	N/A	No
GTL	0.8	N/A	1.2	No
GTL+	1.0	N/A	1.5	No
HSTL Class I	0.75	1.5	0.75	No
HSTL Class III	0.9	1.5	1.5	No
HSTL Class IV	0.9	1.5	1.5	No
SSTL3 Class I &II	1.5	3.3	1.5	No
SSTL2 Class I & II	1.25	2.5	1.25	No
CTT	1.5	3.3	1.5	No
AGP	1.32	3.3	N/A	No

Product Obsolete/Under Obsolescence
XCV200-4FG256C Xilinx Inc. IC FPGA 176 I/O 256FBGA

Input Path

A buffer In the Virtex IOB input path routes the input signal either directly to internal logic or through an optional input flip-flop.

An optional delay element at the D-input of this flip-flop eliminates pad-to-pad hold time. The delay is matched to the internal clock-distribution delay of the FPGA, and when used, assures that the pad-to-pad hold time is zero.

Each input buffer can be configured to conform to any of the low-voltage signalling standards supported. In some of these standards the input buffer utilizes a user-supplied threshold voltage, V_{REF}. The need to supply V_{REF} imposes constraints on which standards can used in close proximity to each other. See **I/O Banking**, page 3.

There are optional pull-up and pull-down resistors at each user I/O input for use after configuration. Their value is in the range 50 kΩ – 100 kΩ.

Output Path

The output path includes a 3-state output buffer that drives the output signal onto the pad. The output signal can be routed to the buffer directly from the internal logic or through an optional IOB output flip-flop.

The 3-state control of the output can also be routed directly from the internal logic or through a flip-flip that provides synchronous enable and disable.

Each output driver can be individually programmed for a wide range of low-voltage signalling standards. Each output buffer can source up to 24 mA and sink up to 48mA. Drive strength and slew rate controls minimize bus transients.

In most signalling standards, the output High voltage depends on an externally supplied V_{CCO} voltage. The need to supply V_{CCO} imposes constraints on which standards can be used in close proximity to each other. See **I/O Banking**, page 3.

An optional weak-keeper circuit is connected to each output. When selected, the circuit monitors the voltage on the pad and weakly drives the pin High or Low to match the input signal. If the pin is connected to a multiple-source signal, the weak keeper holds the signal in its last state if all drivers are disabled. Maintaining a valid logic level in this way eliminates bus chatter.

Because the weak-keeper circuit uses the IOB input buffer to monitor the input level, an appropriate V_{REF} voltage must be provided if the signalling standard requires one. The provision of this voltage must comply with the I/O banking rules.

I/O Banking

Some of the I/O standards described above require V_{CCO} and/or V_{REF} voltages. These voltages externally and connected to device pins that serve groups of IOBs, called banks. Consequently, restrictions exist about which I/O standards can be combined within a given bank.

Eight I/O banks result from separating each edge of the FPGA into two banks, as shown in Figure 3. Each bank has multiple V_{CCO} pins, all of which must be connected to the same voltage. This voltage is determined by the output standards in use.

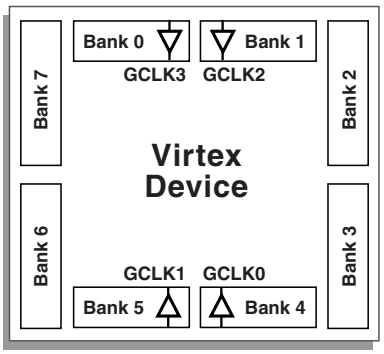

Figure 3: **Virtex I/O Banks**

Within a bank, output standards can be mixed only if they use the same V_{CCO}. Compatible standards are shown in Table 2. GTL and GTL+ appear under all voltages because their open-drain outputs do not depend on V_{CCO}.

Table 2: **Compatible Output Standards**

V_{CCO}	Compatible Standards
3.3 V	PCI, LVTTL, SSTL3 I, SSTL3 II, CTT, AGP, GTL, GTL+
2.5 V	SSTL2 I, SSTL2 II, LVCMOS2, GTL, GTL+
1.5 V	HSTL I, HSTL III, HSTL IV, GTL, GTL+

Some input standards require a user-supplied threshold voltage, V_{REF}. In this case, certain user-I/O pins are automatically configured as inputs for the V_{REF} voltage. Approximately one in six of the I/O pins in the bank assume this role.

The V_{REF} pins within a bank are interconnected internally and consequently only one V_{REF} voltage can be used within each bank. All V_{REF} pins in the bank, however, must be connected to the external voltage source for correct operation.

Within a bank, inputs that require V_{REF} can be mixed with those that do not. However, only one V_{REF} voltage can be used within a bank. Input buffers that use V_{REF} are not 5 V tolerant. LVTTL, LVCMOS2, and PCI 33 MHz 5 V, are 5 V tolerant.

The V_{CCO} and V_{REF} pins for each bank appear in the device Pinout tables and diagrams. The diagrams also show the bank affiliation of each I/O.

Within a given package, the number of V_{REF} and V_{CCO} pins can vary depending on the size of device. In larger devices,

Product Obsolete/Under Obsolescence
XCV200-4FG256C Xilinx Inc. IC FPGA 176 I/O 256FBGA

more I/O pins convert to V_{REF} pins. Since these are always a superset of the V_{REF} pins used for smaller devices, it is possible to design a PCB that permits migration to a larger device if necessary. All the V_{REF} pins for the largest device anticipated must be connected to the V_{REF} voltage, and not used for I/O.

In smaller devices, some V_{CCO} pins used in larger devices do not connect within the package. These unconnected pins can be left unconnected externally, or can be connected to the V_{CCO} voltage to permit migration to a larger device if necessary.

In TQ144 and PQ/HQ240 packages, all V_{CCO} pins are bonded together internally, and consequently the same V_{CCO} voltage must be connected to all of them. In the CS144 package, bank pairs that share a side are interconnected internally, permitting four choices for V_{CCO}. In both cases, the V_{REF} pins remain internally connected as eight banks, and can be used as described previously.

Configurable Logic Block

The basic building block of the Virtex CLB is the logic cell (LC). An LC includes a 4-input function generator, carry logic, and a storage element. The output from the function generator in each LC drives both the CLB output and the D input of the flip-flop. Each Virtex CLB contains four LCs, organized in two similar slices, as shown in Figure 4.

Figure 5 shows a more detailed view of a single slice.

In addition to the four basic LCs, the Virtex CLB contains logic that combines function generators to provide functions of five or six inputs. Consequently, when estimating the number of system gates provided by a given device, each CLB counts as 4.5 LCs.

Look-Up Tables

Virtex function generators are implemented as 4-input look-up tables (LUTs). In addition to operating as a function generator, each LUT can provide a 16 x 1-bit synchronous RAM. Furthermore, the two LUTs within a slice can be combined to create a 16 x 2-bit or 32 x 1-bit synchronous RAM, or a 16x1-bit dual-port synchronous RAM.

The Virtex LUT can also provide a 16-bit shift register that is ideal for capturing high-speed or burst-mode data. This mode can also be used to store data in applications such as Digital Signal Processing.

Storage Elements

The storage elements in the Virtex slice can be configured either as edge-triggered D-type flip-flops or as level-sensitive latches. The D inputs can be driven either by the function generators within the slice or directly from slice inputs, bypassing the function generators.

In addition to Clock and Clock Enable signals, each Slice has synchronous set and reset signals (SR and BY). SR forces a storage element into the initialization state specified for it in the configuration. BY forces it into the opposite state. Alternatively, these signals can be configured to operate asynchronously. All of the control signals are independently invertible, and are shared by the two flip-flops within the slice.

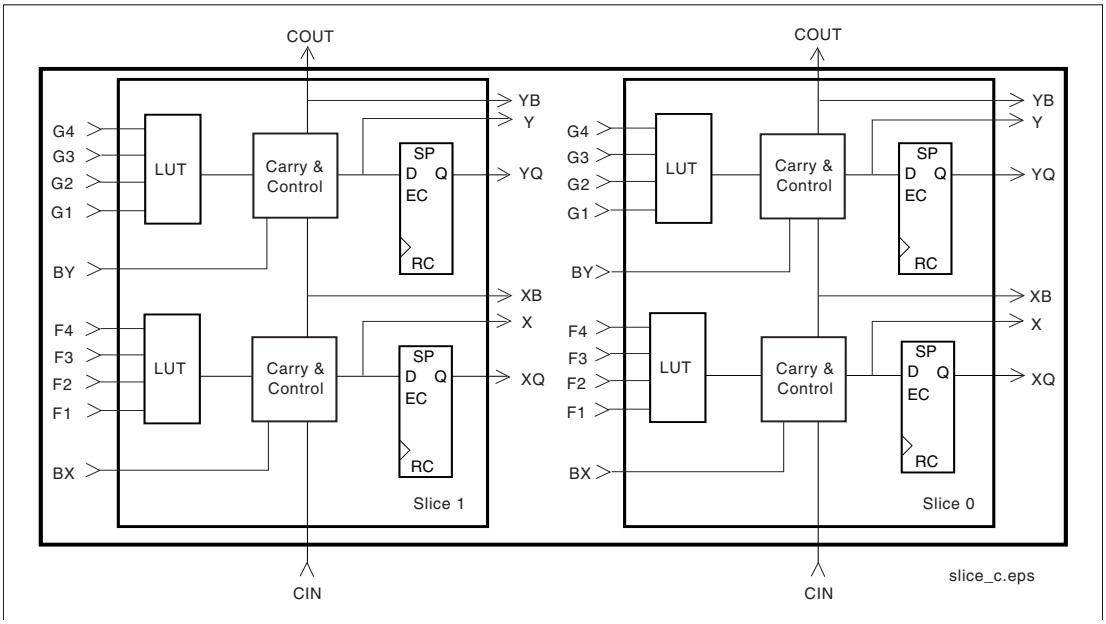

Figure 4: **2-Slice Virtex CLB**

Product Obsolete/Under Obsolescence
XCV200-4FG256C Xilinx Inc. IC FPGA 176 I/O 256FBGA

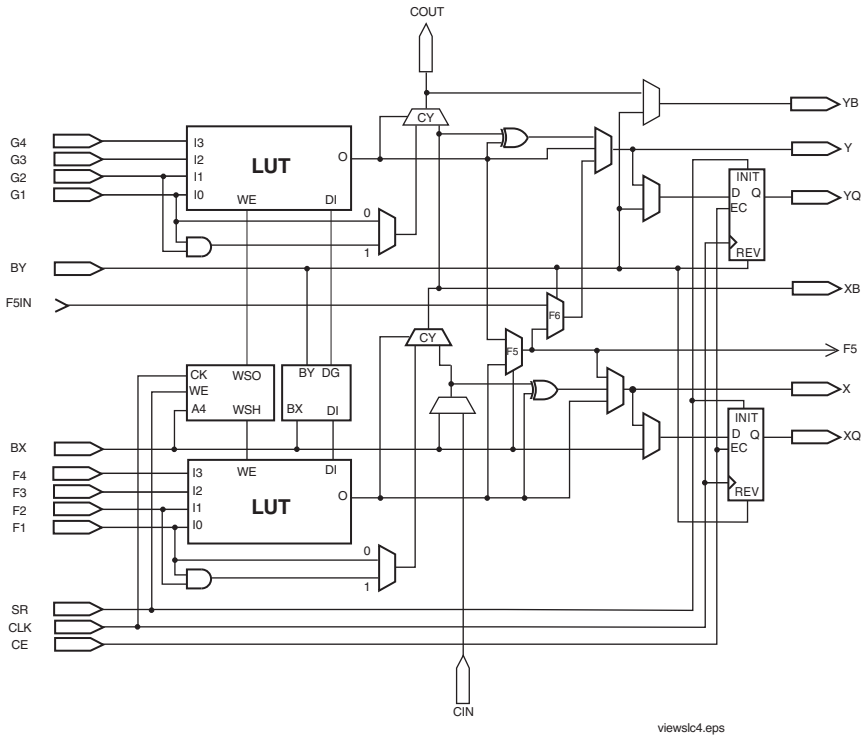

Figure 5: **Detailed View of Virtex Slice**

Additional Logic

The F5 multiplexer in each slice combines the function generator outputs. This combination provides either a function generator that can implement any 5-input function, a 4:1 multiplexer, or selected functions of up to nine inputs.

Similarly, the F6 multiplexer combines the outputs of all four function generators in the CLB by selecting one of the F5-multiplexer outputs. This permits the implementation of any 6-input function, an 8:1 multiplexer, or selected functions of up to 19 inputs.

Each CLB has four direct feedthrough paths, one per LC. These paths provide extra data input lines or additional local routing that does not consume logic resources.

Arithmetic Logic

Dedicated carry logic provides fast arithmetic carry capability for high-speed arithmetic functions. The Virtex CLB supports two separate carry chains, one per Slice. The height of the carry chains is two bits per CLB.

The arithmetic logic includes an XOR gate that allows a 1-bit full adder to be implemented within an LC. In addition, a dedicated AND gate improves the efficiency of multiplier implementation.

The dedicated carry path can also be used to cascade function generators for implementing wide logic functions.

BUFTs

Each Virtex CLB contains two 3-state drivers (BUFTs) that can drive on-chip busses. See **Dedicated Routing**, page 7. Each Virtex BUFT has an independent 3-state control pin and an independent input pin.

Block SelectRAM

Virtex FPGAs incorporate several large block SelectRAM memories. These complement the distributed LUT SelectRAMs that provide shallow RAM structures implemented in CLBs.

Block SelectRAM memory blocks are organized in columns. All Virtex devices contain two such columns, one along each vertical edge. These columns extend the full height of the chip. Each memory block is four CLBs high, and consequently, a Virtex device 64 CLBs high contains 16 memory blocks per column, and a total of 32 blocks.

Table 3 shows the amount of block SelectRAM memory that is available in each Virtex device.

Table 3: **Virtex Block SelectRAM Amounts**

Device	# of Blocks	Total Block SelectRAM Bits
XCV50	8	32,768
XCV100	10	40,960
XCV150	12	49,152
XCV200	14	57,344
XCV300	16	65,536
XCV400	20	81,920
XCV600	24	98,304
XCV800	28	114,688
XCV1000	32	131,072

Product Obsolete/Under Obsolescence
XCV200-4FG256C Xilinx Inc. IC FPGA 176 I/O 256FBGA

Each block SelectRAM cell, as illustrated in Figure 6, is a fully synchronous dual-ported 4096-bit RAM with independent control signals for each port. The data widths of the two ports can be configured independently, providing built-in bus-width conversion.

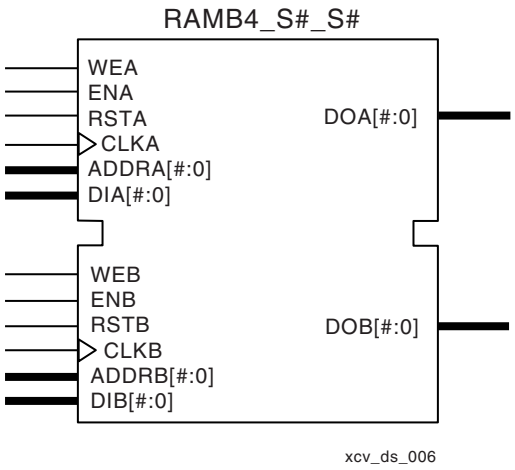

Figure 6: **Dual-Port Block SelectRAM**

Table 4 shows the depth and width aspect ratios for the block SelectRAM.

Table 4: **Block SelectRAM Port Aspect Ratios**

Width	Depth	ADDR Bus	Data Bus
1	4096	ADDR<11:0>	DATA<0>
2	2048	ADDR<10:0>	DATA<1:0>
4	1024	ADDR<9:0>	DATA<3:0>
8	512	ADDR<8:0>	DATA<7:0>
16	256	ADDR<7:0>	DATA<15:0>

The Virtex block SelectRAM also includes dedicated routing to provide an efficient interface with both CLBs and other block SelectRAMs. Refer to XAPP130 for block SelectRAM timing waveforms.

Programmable Routing Matrix

It is the longest delay path that limits the speed of any worst-case design. Consequently, the Virtex routing architecture and its place-and-route software were defined in a single optimization process. This joint optimization minimizes long-path delays, and consequently, yields the best system performance.

The joint optimization also reduces design compilation times because the architecture is software-friendly. Design cycles are correspondingly reduced due to shorter design iteration times.

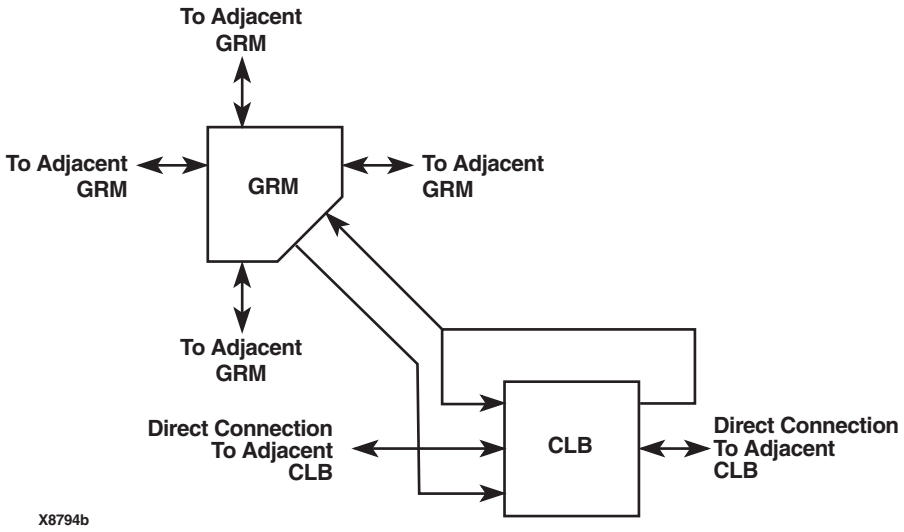

Figure 7: **Virtex Local Routing**

Local Routing

The VersaBlock provides local routing resources, as shown in Figure 7, providing the following three types of connections.

- Interconnections among the LUTs, flip-flops, and GRM
- Internal CLB feedback paths that provide high-speed connections to LUTs within the same CLB, chaining them together with minimal routing delay
- Direct paths that provide high-speed connections between horizontally adjacent CLBs, eliminating the delay of the GRM.

Product Obsolete/Under Obsolescence
XCV200-4FG256C Xilinx Inc. IC FPGA 176 I/O 256FBGA

General Purpose Routing

Most Virtex signals are routed on the general purpose routing, and consequently, the majority of interconnect resources are associated with this level of the routing hierarchy. The general routing resources are located in horizontal and vertical routing channels associated with the rows and columns CLBs. The general-purpose routing resources are listed below.

- Adjacent to each CLB is a General Routing Matrix (GRM). The GRM is the switch matrix through which horizontal and vertical routing resources connect, and is also the means by which the CLB gains access to the general purpose routing.
- 24 single-length lines route GRM signals to adjacent GRMs in each of the four directions.
- 12 buffered Hex lines route GRM signals to another GRMs six-blocks away in each one of the four directions. Organized in a staggered pattern, Hex lines can be driven only at their endpoints. Hex-line signals can be accessed either at the endpoints or at the midpoint (three blocks from the source). One third of the Hex lines are bidirectional, while the remaining ones are uni-directional.
- 12 Longlines are buffered, bidirectional wires that distribute signals across the device quickly and efficiently. Vertical Longlines span the full height of the device, and horizontal ones span the full width of the device.

I/O Routing

Virtex devices have additional routing resources around their periphery that form an interface between the CLB array and the IOBs. This additional routing, called the VersaRing, facilitates pin-swapping and pin-locking, such that logic redesigns can adapt to existing PCB layouts. Time-to-market is reduced, since PCBs and other system components can be manufactured while the logic design is still in progress.

Dedicated Routing

Some classes of signal require dedicated routing resources to maximize performance. In the Virtex architecture, dedicated routing resources are provided for two classes of signal.

- Horizontal routing resources are provided for on-chip 3-state busses. Four partitionable bus lines are provided per CLB row, permitting multiple busses within a row, as shown in Figure 8.
- Two dedicated nets per CLB propagate carry signals vertically to the adjacent CLB.

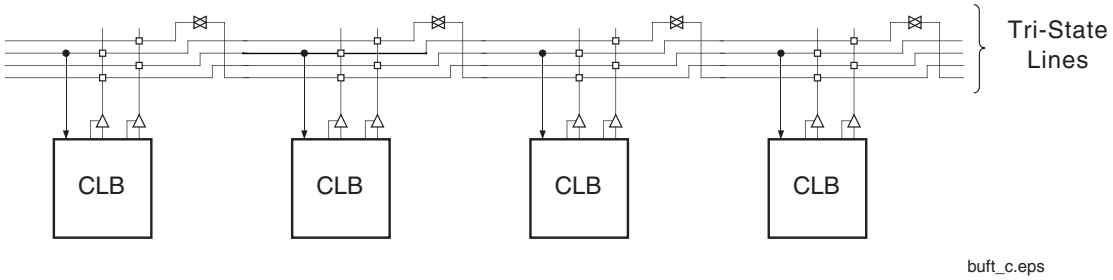

Figure 8: **BUFT Connections to Dedicated Horizontal Bus Lines**

Global Routing

Global Routing resources distribute clocks and other signals with very high fanout throughout the device. Virtex devices include two tiers of global routing resources referred to as primary global and secondary local clock routing resources.

- The primary global routing resources are four dedicated global nets with dedicated input pins that are designed to distribute high-fanout clock signals with minimal skew. Each global clock net can drive all CLB, IOB, and block RAM clock pins. The primary global nets can only be driven by global buffers. There are four global buffers, one for each global net.
- The secondary local clock routing resources consist of 24 backbone lines, 12 across the top of the chip and 12 across bottom. From these lines, up to 12 unique signals per column can be distributed via the 12 longlines in the column. These secondary resources are more flexible than the primary resources since they are not restricted to routing only to clock pins.

Clock Distribution

Virtex provides high-speed, low-skew clock distribution through the primary global routing resources described above. A typical clock distribution net is shown in Figure 9.

Four global buffers are provided, two at the top center of the device and two at the bottom center. These drive the four primary global nets that in turn drive any clock pin.

Product Obsolete/Under Obsolescence
XCV200-4FG256C Xilinx Inc. IC FPGA 176 I/O 256FBGA

Four dedicated clock pads are provided, one adjacent to each of the global buffers. The input to the global buffer is selected either from these pads or from signals in the general purpose routing.

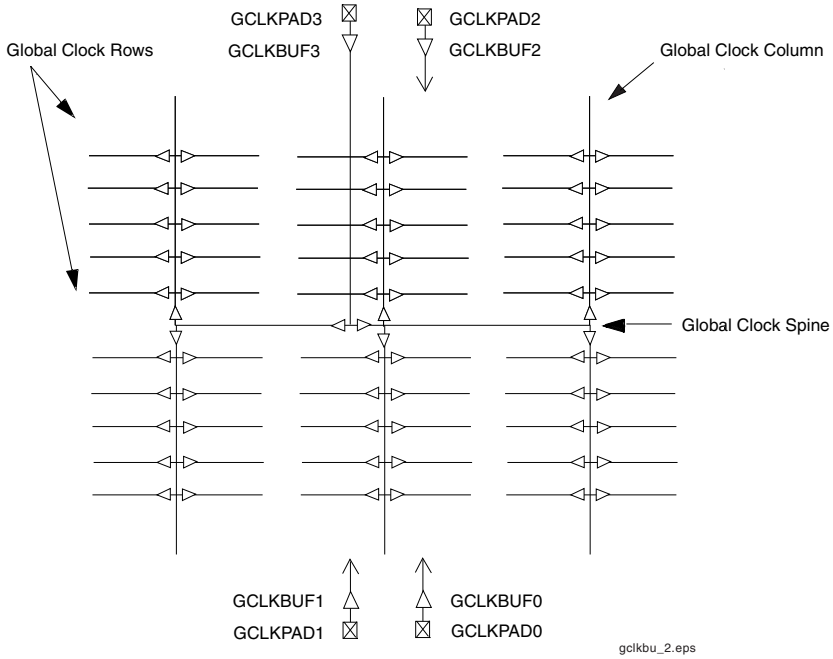

Figure 9: **Global Clock Distribution Network**

Delay-Locked Loop (DLL)

Associated with each global clock input buffer is a fully digital Delay-Locked Loop (DLL) that can eliminate skew between the clock input pad and internal clock-input pins throughout the device. Each DLL can drive two global clock networks.The DLL monitors the input clock and the distributed clock, and automatically adjusts a clock delay element. Clock edges reach internal flip-flops one to four clock periods after they arrive at the input. This closed-loop system effectively eliminates clock-distribution delay by ensuring that clock edges arrive at internal flip-flops in synchronism with clock edges arriving at the input.

In addition to eliminating clock-distribution delay, the DLL provides advanced control of multiple clock domains. The DLL provides four quadrature phases of the source clock, can double the clock, or divide the clock by 1.5, 2, 2.5, 3, 4, 5, 8, or 16.

The DLL also operates as a clock mirror. By driving the output from a DLL off-chip and then back on again, the DLL can be used to de-skew a board level clock among multiple Virtex devices.

In order to guarantee that the system clock is operating correctly prior to the FPGA starting up after configuration, the DLL can delay the completion of the configuration process until after it has achieved lock.

See **DLL Timing Parameters**, page 21 of Module 3, for frequency range information.

Boundary Scan

Virtex devices support all the mandatory boundary-scan instructions specified in the IEEE standard 1149.1. A Test Access Port (TAP) and registers are provided that implement the EXTEST, INTEST, SAMPLE/PRELOAD, BYPASS, IDCODE, USERCODE, and HIGHZ instructions. The TAP also supports two internal scan chains and configuration/readback of the device.The TAP uses dedicated package pins that always operate using LVTTL. For TDO to operate using LVTTL, the V_{CCO} for Bank 2 should be 3.3 V. Otherwise, TDO switches rail-to-rail between ground and V_{CCO}.

Boundary-scan operation is independent of individual IOB configurations, and unaffected by package type. All IOBs, including un-bonded ones, are treated as independent 3-state bidirectional pins in a single scan chain. Retention of the bidirectional test capability after configuration facilitates the testing of external interconnections, provided the user design or application is turned off.

Table 5 lists the boundary-scan instructions supported in Virtex FPGAs. Internal signals can be captured during EXTEST by connecting them to un-bonded or unused IOBs. They can also be connected to the unused outputs of IOBs defined as unidirectional input pins.

Before the device is configured, all instructions except USER1 and USER2 are available. After configuration, all instructions are available. During configuration, it is recommended that those operations using the boundary-scan register (SAMPLE/PRELOAD, INTEST, EXTEST) not be performed.

Product Obsolete/Under Obsolescence
XCV200-4FG256C Xilinx Inc. IC FPGA 176 I/O 256FBGA

In addition to the test instructions outlined above, the boundary-scan circuitry can be used to configure the FPGA, and also to read back the configuration data.

Figure 10 is a diagram of the Virtex Series boundary scan logic. It includes three bits of Data Register per IOB, the IEEE 1149.1 Test Access Port controller, and the Instruction Register with decodes.

Instruction Set

The Virtex Series boundary scan instruction set also includes instructions to configure the device and read back configuration data (CFG_IN, CFG_OUT, and JSTART). The complete instruction set is coded as shown in Table 5.

Data Registers

The primary data register is the boundary scan register. For each IOB pin in the FPGA, bonded or not, it includes three bits for In, Out, and 3-State Control. Non-IOB pins have appropriate partial bit population if input-only or output-only. Each EXTEST CAPTURED-OR state captures all In, Out, and 3-state pins.

The other standard data register is the single flip-flop BYPASS register. It synchronizes data being passed through the FPGA to the next downstream boundary scan device.

The FPGA supports up to two additional internal scan chains that can be specified using the BSCAN macro. The macro provides two user pins (SEL1 and SEL2) which are decodes of the USER1 and USER2 instructions respectively. For these instructions, two corresponding pins (TDO1 and TDO2) allow user scan data to be shifted out of TDO.

Likewise, there are individual clock pins (DRCK1 and DRCK2) for each user register. There is a common input pin (TDI) and shared output pins that represent the state of the TAP controller (RESET, SHIFT, and UPDATE).

Bit Sequence

The order within each IOB is: In, Out, 3-State. The input-only pins contribute only the In bit to the boundary scan I/O data register, while the output-only pins contributes all three bits.

From a cavity-up view of the chip (as shown in EPIC), starting in the upper right chip corner, the boundary scan data-register bits are ordered as shown in Figure 11.

BSDL (Boundary Scan Description Language) files for Virtex Series devices are available on the Xilinx web site in the File Download area.

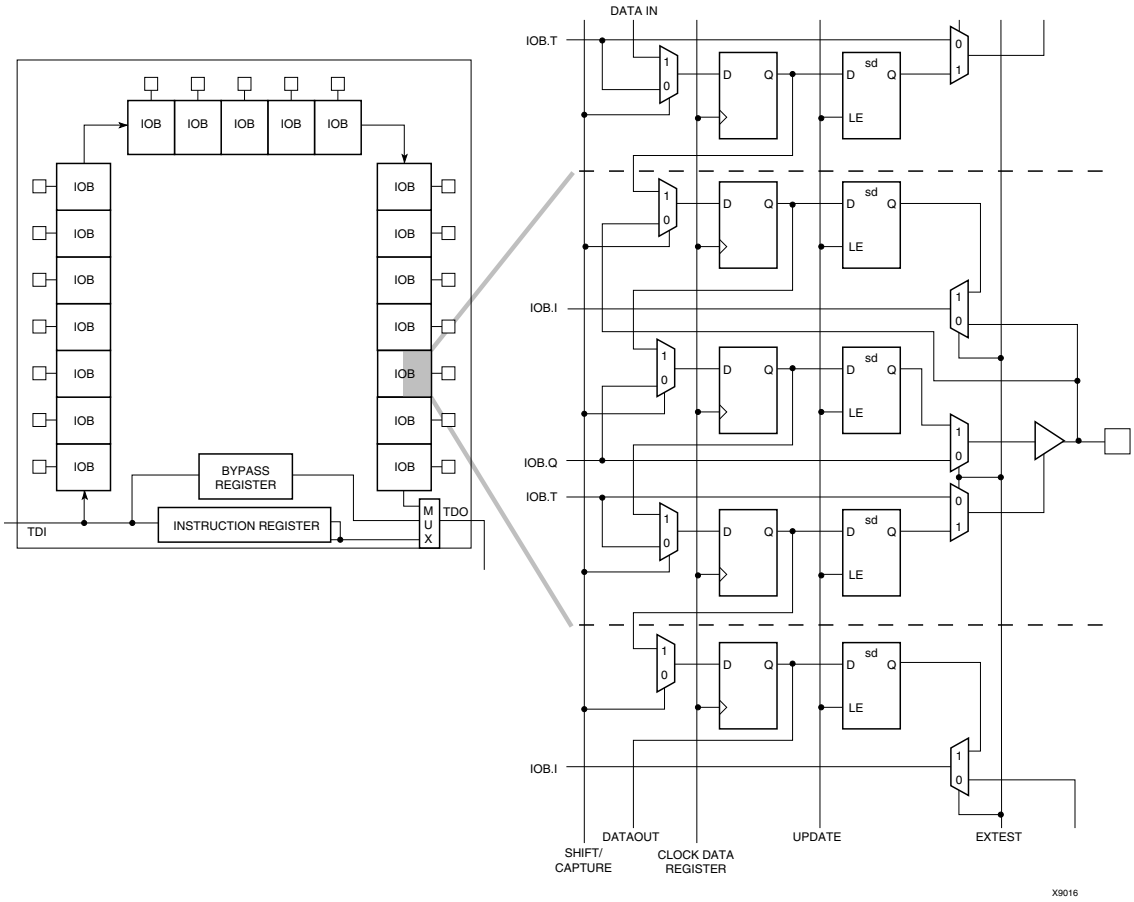

Figure 10: **Virtex Series Boundary Scan Logic**

Product Obsolete/Under Obsolescence
XCV200-4FG256C Xilinx Inc. IC FPGA 176 I/O 256FBGA

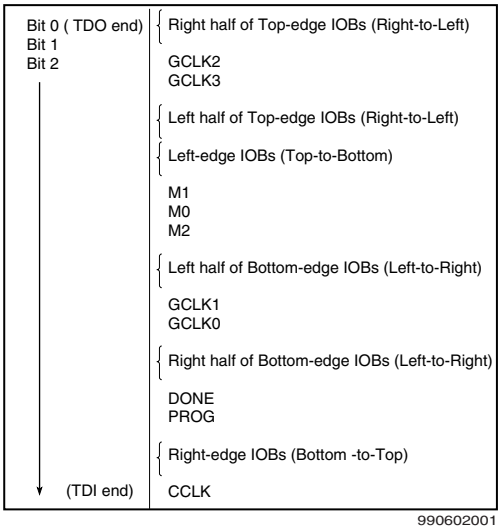

Figure 11: **Boundary Scan Bit Sequence**

Table 5: **Boundary Scan Instructions**

Boundary-Scan Command	Binary Code(4:0)	Description
EXTEST	00000	Enables boundary-scan EXTEST operation
SAMPLE/PRELOAD	00001	Enables boundary-scan SAMPLE/PRELOAD operation
USER 1	00010	Access user-defined register 1
USER 2	00011	Access user-defined register 2
CFG_OUT	00100	Access the configuration bus for read operations.
CFG_IN	00101	Access the configuration bus for write operations.
INTEST	00111	Enables boundary-scan INTEST operation
USERCODE	01000	Enables shifting out USER code
IDCODE	01001	Enables shifting out of ID Code
HIGHZ	01010	3-states output pins while enabling the Bypass Register
JSTART	01100	Clock the start-up sequence when StartupClk is TCK
BYPASS	11111	Enables BYPASS
RESERVED	All other codes	Xilinx reserved instructions

Identification Registers

The IDCODE register is supported. By using the IDCODE, the device connected to the JTAG port can be determined.

The IDCODE register has the following binary format:

vvvv:ffff:fffa:aaaa:aaaa:cccc:cccc:ccc1

where

v = the die version number

f = the family code (03h for Virtex family)

a = the number of CLB rows (ranges from 010h for XCV50 to 040h for XCV1000)

c = the company code (49h for Xilinx)

The USERCODE register is supported. By using the USERCODE, a user-programmable identification code can be loaded and shifted out for examination. The identification code is embedded in the bitstream during bitstream generation and is valid only after configuration.

Table 6: **IDCODEs Assigned to Virtex FPGAs**

FPGA	IDCODE
XCV50	v0610093h
XCV100	v0614093h
XCV150	v0618093h
XCV200	v061C093h
XCV300	v0620093h
XCV400	v0628093h
XCV600	v0630093h
XCV800	v0638093h
XCV1000	v0640093h

Including Boundary Scan in a Design

Since the boundary scan pins are dedicated, no special element needs to be added to the design unless an internal data register (USER1 or USER2) is desired.

If an internal data register is used, insert the boundary scan symbol and connect the necessary pins as appropriate.

Development System

Virtex FPGAs are supported by the Xilinx Foundation and Alliance CAE tools. The basic methodology for Virtex design consists of three interrelated steps: design entry, implementation, and verification. Industry-standard tools are used for design entry and simulation (for example, Synopsys FPGA Express), while Xilinx provides proprietary architecture-specific tools for implementation.

The Xilinx development system is integrated under the Xilinx Design Manager (XDM™) software, providing design-

Product Obsolete/Under Obsolescence
XCV200-4FG256C Xilinx Inc. IC FPGA 176 I/O 256FBGA

ers with a common user interface regardless of their choice of entry and verification tools. The XDM software simplifies the selection of implementation options with pull-down menus and on-line help.

Application programs ranging from schematic capture to Placement and Routing (PAR) can be accessed through the XDM software. The program command sequence is generated prior to execution, and stored for documentation.

Several advanced software features facilitate Virtex design. RPMs, for example, are schematic-based macros with relative location constraints to guide their placement. They help ensure optimal implementation of common functions.

For HDL design entry, the Xilinx FPGA Foundation development system provides interfaces to the following synthesis design environments.

- Synopsys (FPGA Compiler, FPGA Express)
- Exemplar (Spectrum)
- Synplicity (Synplify)

For schematic design entry, the Xilinx FPGA Foundation and alliance development system provides interfaces to the following schematic-capture design environments.

- Mentor Graphics V8 (Design Architect, QuickSim II)
- Viewlogic Systems (Viewdraw)

Third-party vendors support many other environments.

A standard interface-file specification, Electronic Design Interchange Format (EDIF), simplifies file transfers into and out of the development system.

Virtex FPGAs supported by a unified library of standard functions. This library contains over 400 primitives and macros, ranging from 2-input AND gates to 16-bit accumulators, and includes arithmetic functions, comparators, counters, data registers, decoders, encoders, I/O functions, latches, Boolean functions, multiplexers, shift registers, and barrel shifters.

The “soft macro” portion of the library contains detailed descriptions of common logic functions, but does not contain any partitioning or placement information. The performance of these macros depends, therefore, on the partitioning and placement obtained during implementation.

RPMs, on the other hand, do contain predetermined partitioning and placement information that permits optimal implementation of these functions. Users can create their own library of soft macros or RPMs based on the macros and primitives in the standard library.

The design environment supports hierarchical design entry, with high-level schematics that comprise major functional blocks, while lower-level schematics define the logic in these blocks. These hierarchical design elements are automatically combined by the implementation tools. Different design entry tools can be combined within a hierarchical design, thus allowing the most convenient entry method to be used for each portion of the design.

Design Implementation

The place-and-route tools (PAR) automatically provide the implementation flow described in this section. The partitioner takes the EDIF net list for the design and maps the logic into the architectural resources of the FPGA (CLBs and IOBs, for example). The placer then determines the best locations for these blocks based on their interconnections and the desired performance. Finally, the router interconnects the blocks.

The PAR algorithms support fully automatic implementation of most designs. For demanding applications, however, the user can exercise various degrees of control over the process. User partitioning, placement, and routing information is optionally specified during the design-entry process. The implementation of highly structured designs can benefit greatly from basic floor planning.

The implementation software incorporates Timing Wizard® timing-driven placement and routing. Designers specify timing requirements along entire paths during design entry. The timing path analysis routines in PAR then recognize these user-specified requirements and accommodate them.

Timing requirements are entered on a schematic in a form directly relating to the system requirements, such as the targeted clock frequency, or the maximum allowable delay between two registers. In this way, the overall performance of the system along entire signal paths is automatically tailored to user-generated specifications. Specific timing information for individual nets is unnecessary.

Design Verification

In addition to conventional software simulation, FPGA users can use in-circuit debugging techniques. Because Xilinx devices are infinitely reprogrammable, designs can be verified in real time without the need for extensive sets of software simulation vectors.

The development system supports both software simulation and in-circuit debugging techniques. For simulation, the system extracts the post-layout timing information from the design database, and back-annotates this information into the net list for use by the simulator. Alternatively, the user can verify timing-critical portions of the design using the TRACE® static timing analyzer.

For in-circuit debugging, the development system includes a download and readback cable. This cable connects the FPGA in the target system to a PC or workstation. After downloading the design into the FPGA, the designer can single-step the logic, readback the contents of the flip-flops, and so observe the internal logic state. Simple modifications can be downloaded into the system in a matter of minutes.

Product Obsolete/Under Obsolescence
XCV200-4FG256C Xilinx Inc. IC FPGA 176 I/O 256FBGA

Configuration

Virtex devices are configured by loading configuration data into the internal configuration memory. Some of the pins used for this are dedicated configuration pins, while others can be re-used as general purpose inputs and outputs once configuration is complete.

The following are dedicated pins:

- Mode pins (M2, M1, M0)
- Configuration clock pin (CCLK)
- $\overline{\text{PROGRAM}}$ pin
- DONE pin
- Boundary-scan pins (TDI, TDO, TMS, TCK)

Depending on the configuration mode chosen, CCLK can be an output generated by the FPGA, or it can be generated externally and provided to the FPGA as an input. The $\overline{\text{PROGRAM}}$ pin must be pulled High prior to reconfiguration.

Note that some configuration pins can act as outputs. For correct operation, these pins can require a V_{CCO} of 3.3 V to permit LVTTL operation. All the pins affected are in banks 2 or 3. The configuration pins needed for SelectMap (CS, Write) are located in bank 1.

After Virtex devices are configured, unused IOBs function as 3-state OBUFTs with weak pull downs. For a more detailed description than that given below, see the XAPP138, Virtex Configuration and Readback.

Configuration Modes

Virtex supports the following four configuration modes.

- Slave-serial mode
- Master-serial mode
- SelectMAP mode
- Boundary-scan mode

The Configuration mode pins (M2, M1, M0) select among these configuration modes with the option in each case of having the IOB pins either pulled up or left floating prior to configuration. The selection codes are listed in Table 7.

Configuration through the boundary-scan port is always available, independent of the mode selection. Selecting the boundary-scan mode simply turns off the other modes. The three mode pins have internal pull-up resistors, and default to a logic High if left unconnected. However, it is recommended to drive the configuration mode pins externally.

Table 7: **Configuration Codes**

Configuration Mode	M2	M1	M0	CCLK Direction	Data Width	Serial D_{out}	Configuration Pull-ups
Master-serial mode	0	0	0	Out	1	Yes	No
Boundary-scan mode	1	0	1	N/A	1	No	No
SelectMAP mode	1	1	0	In	8	No	No
Slave-serial mode	1	1	1	In	1	Yes	No
Master-serial mode	1	0	0	Out	1	Yes	Yes
Boundary-scan mode	0	0	1	N/A	1	No	Yes
SelectMAP mode	0	1	0	In	8	No	Yes
Slave-serial mode	0	1	1	In	1	Yes	Yes

Slave-Serial Mode

In slave-serial mode, the FPGA receives configuration data in bit-serial form from a serial PROM or other source of serial configuration data. The serial bitstream must be setup at the DIN input pin a short time before each rising edge of an externally generated CCLK.

For more information on serial PROMs, see the PROM data sheet at:
http://www.xilinx.com/bvdocs/publications/ds026.pdf.

Multiple FPGAs can be daisy-chained for configuration from a single source. After a particular FPGA has been configured, the data for the next device is routed to the DOUT pin. The data on the DOUT pin changes on the rising edge of CCLK.

The change of DOUT on the rising edge of CCLK differs from previous families, but does not cause a problem for mixed configuration chains. This change was made to improve serial configuration rates for Virtex-only chains.

Figure 12 shows a full master/slave system. A Virtex device in slave-serial mode should be connected as shown in the third device from the left.

Slave-serial mode is selected by applying <111> or <011> to the mode pins (M2, M1, M0). A weak pull-up on the mode pins makes slave-serial the default mode if the pins are left unconnected. However, it is recommended to drive the configuration mode pins externally. Figure 13 shows slave-serial mode programming switching characteristics.

Table 8 provides more detail about the characteristics shown in Figure 13. Configuration must be delayed until the $\overline{\text{INIT}}$ pins of all daisy-chained FPGAs are High.

Product Obsolete/Under Obsolescence
XCV200-4FG256C Xilinx Inc. IC FPGA 176 I/O 256FBGA

Table 8: **Master/Slave Serial Mode Programming Switching**

	Description	Figure References	Symbol	Values	Units
CCLK	DIN setup/hold, slave mode	1/2	T_{DCC}/T_{CCD}	5.0 / 0	ns, min
	DIN setup/hold, master mode	1/2	T_{DSCK}/T_{CKDS}	5.0 / 0	ns, min
	DOUT	3	T_{CCO}	12.0	ns, max
	High time	4	T_{CCH}	5.0	ns, min
	Low time	5	T_{CCL}	5.0	ns, min
	Maximum Frequency		F_{CC}	66	MHz, max
	Frequency Tolerance, master mode with respect to nominal			+45% –30%	

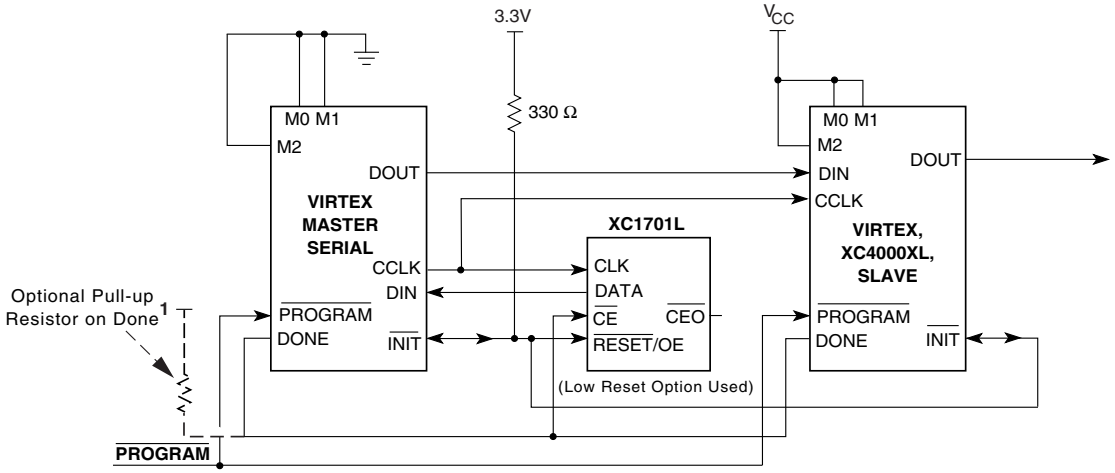

Note 1: If none of the Virtex FPGAs have been selected to drive DONE, an external pull-up resistor of 330 Ω should be added to the common DONE line. (For Spartan-XL devices, add a 4.7K Ω pull-up resistor.) This pull-up is not needed if the DriveDONE attribute is set. If used, DriveDONE should be selected only for the last device in the configuration chain.

xcv_12_050103

Figure 12: **Master/Slave Serial Mode Circuit Diagram**

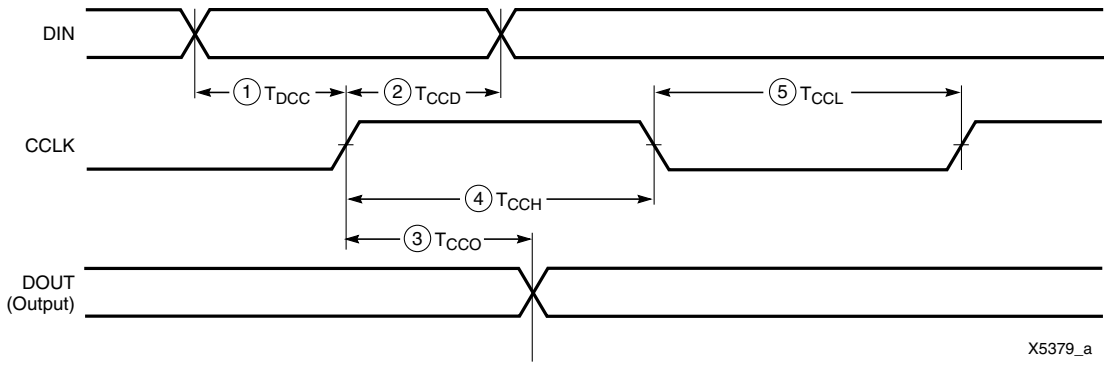

Figure 13: **Slave-Serial Mode Programming Switching Characteristics**

Product Obsolete/Under Obsolescence
XCV200-4FG256C Xilinx Inc. IC FPGA 176 I/O 256FBGA

Master-Serial Mode

In master-serial mode, the CCLK output of the FPGA drives a Xilinx Serial PROM that feeds bit-serial data to the DIN input. The FPGA accepts this data on each rising CCLK edge. After the FPGA has been loaded, the data for the next device in a daisy-chain is presented on the DOUT pin after the rising CCLK edge.

The interface is identical to slave-serial except that an internal oscillator is used to generate the configuration clock (CCLK). A wide range of frequencies can be selected for CCLK which always starts at a slow default frequency. Configuration bits then switch CCLK to a higher frequency for the remainder of the configuration. Switching to a lower frequency is prohibited.

The CCLK frequency is set using the ConfigRate option in the bitstream generation software. The maximum CCLK frequency that can be selected is 60 MHz. When selecting a CCLK frequency, ensure that the serial PROM and any daisy-chained FPGAs are fast enough to support the clock rate.

On power-up, the CCLK frequency is 2.5 MHz. This frequency is used until the ConfigRate bits have been loaded when the frequency changes to the selected ConfigRate. Unless a different frequency is specified in the design, the default ConfigRate is 4 MHz.

Figure 12 shows a full master/slave system. In this system, the left-most device operates in master-serial mode. The remaining devices operate in slave-serial mode. The SPROM $\overline{\text{RESET}}$ pin is driven by $\overline{\text{INIT}}$, and the $\overline{\text{CE}}$ input is driven by DONE. There is the potential for contention on the DONE pin, depending on the start-up sequence options chosen.

Figure 14 shows the timing of master-serial configuration. Master-serial mode is selected by a <000> or <100> on the mode pins (M2, M1, M0). Table 8 shows the timing information for Figure 14.

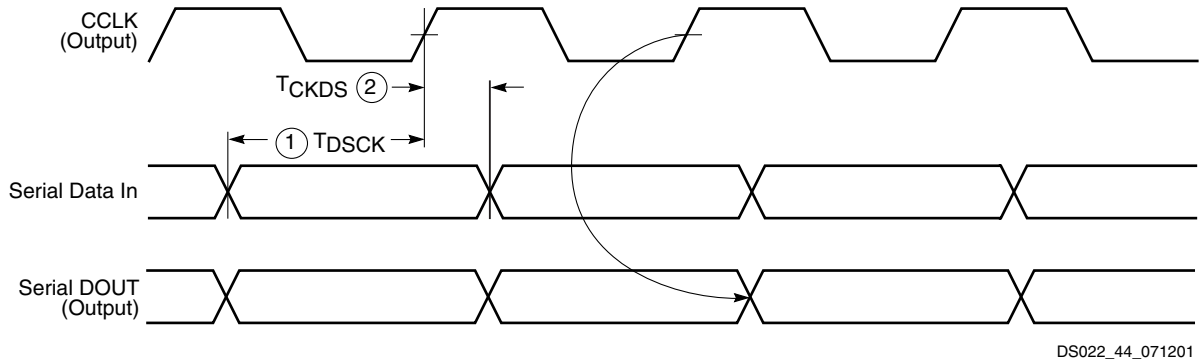

Figure 14: **Master-Serial Mode Programming Switching Characteristics**

At power-up, V_{CC} must rise from 1.0 V to V_{CC} min in less than 50 ms, otherwise delay configuration by pulling $\overline{\text{PROGRAM}}$ Low until V_{CC} is valid.

The sequence of operations necessary to configure a Virtex FPGA serially appears in Figure 15.

SelectMAP Mode

The SelectMAP mode is the fastest configuration option. Byte-wide data is written into the FPGA with a BUSY flag controlling the flow of data.

An external data source provides a byte stream, CCLK, a Chip Select ($\overline{\text{CS}}$) signal and a Write signal ($\overline{\text{WRITE}}$). If BUSY is asserted (High) by the FPGA, the data must be held until BUSY goes Low.

Data can also be read using the SelectMAP mode. If $\overline{\text{WRITE}}$ is not asserted, configuration data is read out of the FPGA as part of a readback operation.

In the SelectMAP mode, multiple Virtex devices can be chained in parallel. DATA pins (D7:D0), CCLK, $\overline{\text{WRITE}}$, $\overline{\text{BUSY}}$, $\overline{\text{PROGRAM}}$, DONE, and $\overline{\text{INIT}}$ can be connected in parallel between all the FPGAs. Note that the data is organized with the MSB of each byte on pin DO and the LSB of each byte on D7. The $\overline{\text{CS}}$ pins are kept separate, insuring that each FPGA can be selected individually. $\overline{\text{WRITE}}$ should be Low before loading the first bitstream and returned High after the last device has been programmed. Use $\overline{\text{CS}}$ to select the appropriate FPGA for loading the bitstream and sending the configuration data. at the end of the bitstream, deselect the loaded device and select the next target FPGA by setting its $\overline{\text{CS}}$ pin High. A free-running oscillator or other externally generated signal can be used for CCLK. The $\overline{\text{BUSY}}$ signal can be ignored for frequencies below 50 MHz. For details about frequencies above 50 MHz, see XAPP138, Virtex Configuration and Readback. Once all the devices have been programmed, the DONE pin goes High.

Product Obsolete/Under Obsolescence
XCV200-4FG256C Xilinx Inc. IC FPGA 176 I/O 256FBGA

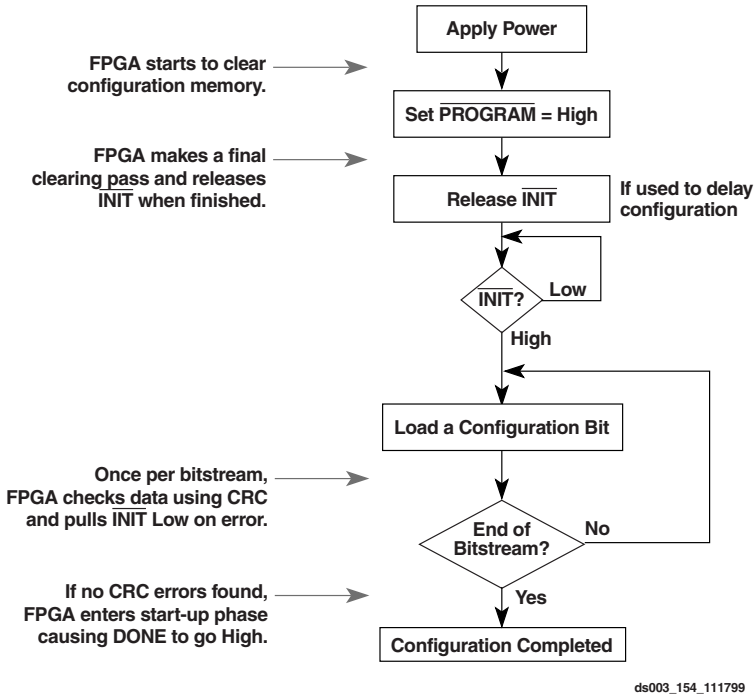

Figure 15: **Serial Configuration Flowchart**

After configuration, the pins of the SelectMAP port can be used as additional user I/O. Alternatively, the port can be retained to permit high-speed 8-bit readback.

Retention of the SelectMAP port is selectable on a design-by-design basis when the bitstream is generated. If retention is selected, PROHIBIT constraints are required to prevent the SelectMAP-port pins from being used as user I/O.

Multiple Virtex FPGAs can be configured using the Select-MAP mode, and be made to start-up simultaneously. To configure multiple devices in this way, wire the individual CCLK, Data, $\overline{\text{WRITE}}$, and BUSY pins of all the devices in parallel. The individual devices are loaded separately by asserting the $\overline{\text{CS}}$ pin of each device in turn and writing the appropriate data. see Table 9 for SelectMAP Write Timing Characteristics.

Table 9: **SelectMAP Write Timing Characteristics**

	Description		Symbol		Units
CCLK	D_{0-7} Setup/Hold	1/2	T_{SMDCC}/T_{SMCCD}	5.0 / 1.7	ns, min
	$\overline{\text{CS}}$ Setup/Hold	3/4	T_{SMCSCC}/T_{SMCCCS}	7.0 / 1.7	ns, min
	$\overline{\text{WRITE}}$ Setup/Hold	5/6	T_{SMCCW}/T_{SMWCC}	7.0 / 1.7	ns, min
	BUSY Propagation Delay	7	T_{SMCKBY}	12.0	ns, max
	Maximum Frequency		F_{CC}	66	MHz, max
	Maximum Frequency with no handshake		F_{CCNH}	50	MHz, max

Write

Write operations send packets of configuration data into the FPGA. The sequence of operations for a multi-cycle write operation is shown below. Note that a configuration packet can be split into many such sequences. The packet does not have to complete within one assertion of $\overline{\text{CS}}$, illustrated in Figure 16.

1. Assert $\overline{\text{WRITE}}$ and $\overline{\text{CS}}$ Low. Note that when $\overline{\text{CS}}$ is asserted on successive CCLKs, $\overline{\text{WRITE}}$ must remain either asserted or de-asserted. Otherwise an abort will be initiated, as described below.
2. Drive data onto D[7:0]. Note that to avoid contention, the data source should not be enabled while $\overline{\text{CS}}$ is Low and $\overline{\text{WRITE}}$ is High. Similarly, while $\overline{\text{WRITE}}$ is High, no more that one $\overline{\text{CS}}$ should be asserted.

Product Obsolete/Under Obsolescence
XCV200-4FG256C Xilinx Inc. IC FPGA 176 I/O 256FBGA

3. At the rising edge of CCLK: If BUSY is Low, the data is accepted on this clock. If BUSY is High (from a previous write), the data is not accepted. Acceptance will instead occur on the first clock after BUSY goes Low, and the data must be held until this has happened.
4. Repeat steps 2 and 3 until all the data has been sent.
5. De-assert $\overline{CS}$ and $\overline{WRITE}$.

A flowchart for the write operation appears in Figure 17. Note that if CCLK is slower than f_{CCNH}, the FPGA never asserts BUSY. In this case, the above handshake is unnecessary, and data can simply be entered into the FPGA every CCLK cycle.

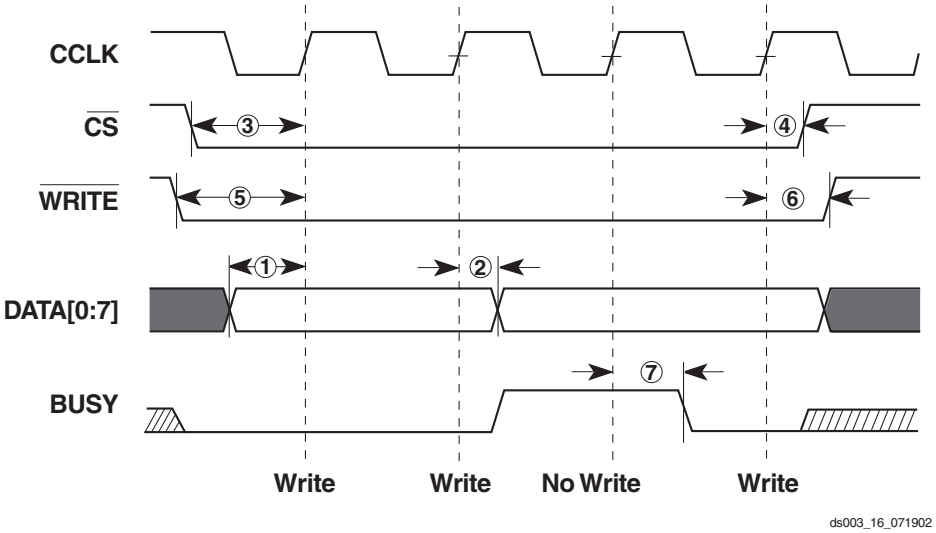

Figure 16: **Write Operations**

Product Obsolete/Under Obsolescence
XCV200-4FG256C Xilinx Inc. IC FPGA 176 I/O 256FBGA

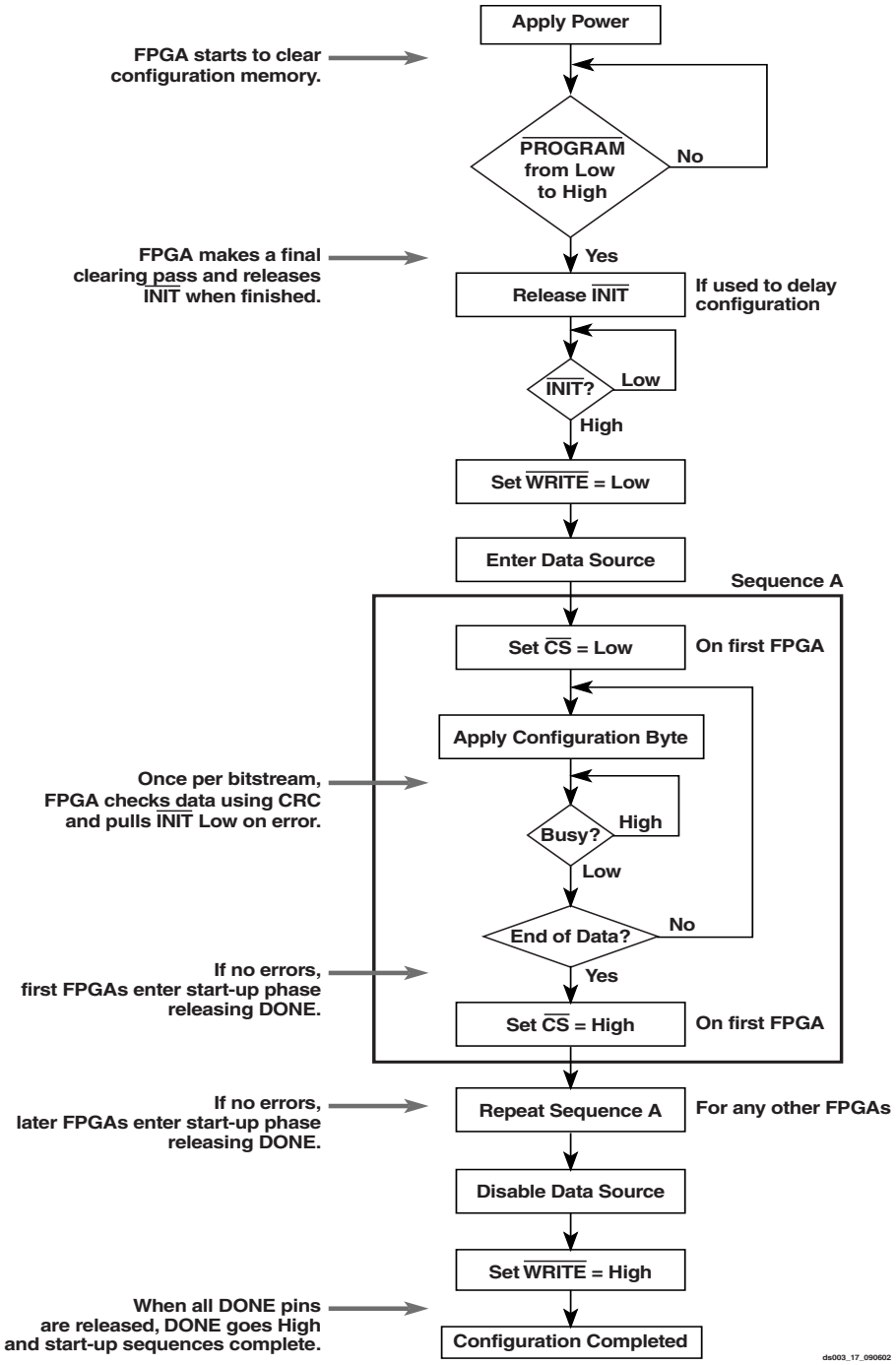

Figure 17: **SelectMAP Flowchart for Write Operation**

Abort

During a given assertion of $\overline{CS}$, the user cannot switch from a write to a read, or vice-versa. This action causes the current packet command to be aborted. The device will remain BUSY until the aborted operation has completed. Following an abort, data is assumed to be unaligned to word boundaries, and the FPGA requires a new synchronization word prior to accepting any new packets.

To initiate an abort during a write operation, de-assert $\overline{WRITE}$. At the rising edge of CCLK, an abort is initiated, as shown in Figure 18.

Product Obsolete/Under Obsolescence
XCV200-4FG256C Xilinx Inc. IC FPGA 176 I/O 256FBGA

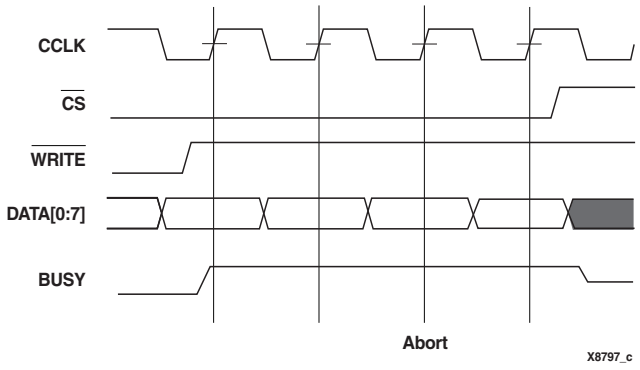

Figure 18: **SelectMAP Write Abort Waveforms**

Boundary-Scan Mode

In the boundary-scan mode, configuration is done through the IEEE 1149.1 Test Access Port. Note that the PROGRAM pin must be pulled High prior to reconfiguration. A Low on the PROGRAM pin resets the TAP controller and no JTAG operations can be performed.

Configuration through the TAP uses the CFG_IN instruction. This instruction allows data input on TDI to be converted into data packets for the internal configuration bus.

The following steps are required to configure the FPGA through the boundary-scan port (when using TCK as a start-up clock).

1. Load the CFG_IN instruction into the boundary-scan instruction register (IR)
2. Enter the Shift-DR (SDR) state
3. Shift a configuration bitstream into TDI
4. Return to Run-Test-Idle (RTI)
5. Load the JSTART instruction into IR
6. Enter the SDR state
7. Clock TCK through the startup sequence
8. Return to RTI

Configuration and readback via the TAP is always available. The boundary-scan mode is selected by a <101> or 001> on the mode pins (M2, M1, M0). For details on TAP characteristics, refer to XAPP139.

Configuration Sequence

The configuration of Virtex devices is a three-phase process. First, the configuration memory is cleared. Next, configuration data is loaded into the memory, and finally, the logic is activated by a start-up process.

Configuration is automatically initiated on power-up unless it is delayed by the user, as described below. The configuration process can also be initiated by asserting PROGRAM.

The end of the memory-clearing phase is signalled by INIT going High, and the completion of the entire process is signalled by DONE going High.

The power-up timing of configuration signals is shown in Figure 19. The corresponding timing characteristics are listed in Table 10.

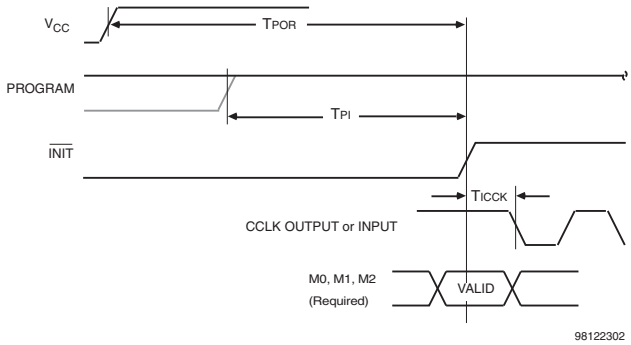

Figure 19: **Power-Up Timing Configuration Signals**

Table 10: **Power-up Timing Characteristics**

Description	Symbol	Value	Units
Power-on Reset	T_{POR}	2.0	ms, max
Program Latency	T_{PL}	100.0	µs, max
CCLK (output) Delay	T_{ICCK}	0.5	µs, min
		4.0	µs, max
Program Pulse Width	$T_{PROGRAM}$	300	ns, min

Delaying Configuration

INIT can be held Low using an open-drain driver. An open-drain is required since INIT is a bidirectional open-drain pin that is held Low by the FPGA while the configuration memory is being cleared. Extending the time that the pin is Low causes the configuration sequencer to wait. Thus, configuration is delayed by preventing entry into the phase where data is loaded.

Start-Up Sequence

The default Start-up sequence is that one CCLK cycle after DONE goes High, the global 3-state signal (GTS) is released. This permits device outputs to turn on as necessary.

One CCLK cycle later, the Global Set/Reset (GSR) and Global Write Enable (GWE) signals are released. This permits the internal storage elements to begin changing state in response to the logic and the user clock.

The relative timing of these events can be changed. In addition, the GTS, GSR, and GWE events can be made dependent on the DONE pins of multiple devices all going High, forcing the devices to start in synchronism. The sequence can also be paused at any stage until lock has been achieved on any or all DLLs.

Product Obsolete/Under Obsolescence
XCV200-4FG256C Xilinx Inc. IC FPGA 176 I/O 256FBGA

Data Stream Format

Virtex devices are configured by sequentially loading frames of data. Table 11 lists the total number of bits required to configure each device. For more detailed information, see application note XAPP151 “Virtex Configuration Architecture Advanced Users Guide”.

Table 11: **Virtex Bit-Stream Lengths**

Device	# of Configuration Bits
XCV50	559,200
XCV100	781,216
XCV150	1,040,096
XCV200	1,335,840
XCV300	1,751,808
XCV400	2,546,048
XCV600	3,607,968
XCV800	4,715,616
XCV1000	6,127,744

Readback

The configuration data stored in the Virtex configuration memory can be readback for verification. Along with the configuration data it is possible to readback the contents all flip-flops/latches, LUTRAMs, and block RAMs. This capability is used for real-time debugging.

For more detailed information, see Application Note XAPP138**:** *Virtex FPGA Series Configuration and Readback*, available online at www.xilinx.com.

Revision History

Date	Version	Revision
11/98	1.0	Initial Xilinx release.
01/99	1.2	Updated package drawings and specs.
02/99	1.3	Update of package drawings, updated specifications.
05/99	1.4	Addition of package drawings and specifications.
05/99	1.5	Replaced FG 676 & FG680 package drawings.
07/99	1.6	Changed Boundary Scan Information and changed Figure 11, Boundary Scan Bit Sequence. Updated IOB Input & Output delays. Added Capacitance info for different I/O Standards. Added 5 V tolerant information. Added DLL Parameters and waveforms and new Pin-to-pin Input and Output Parameter tables for Global Clock Input to Output and Setup and Hold. Changed Configuration Information including Figures 12, 14, 17 & 19. Added device-dependent listings for quiescent currents ICCINTQ and ICCOQ. Updated IOB Input and Output Delays based on default standard of LVTTL, 12 mA, Fast Slew Rate. Added IOB Input Switching Characteristics Standard Adjustments.
09/99	1.7	Speed grade update to preliminary status, Power-on specification and Clock-to-Out Minimums additions, “0” hold time listing explanation, quiescent current listing update, and Figure 6 ADDRA input label correction. Added T_{IJITCC} parameter, changed T_{OJIT} to T_{OPHASE}.
01/00	1.8	Update to speed.txt file 1.96. Corrections for CRs 111036,111137, 112697, 115479, 117153, 117154, and 117612. Modified notes for Recommended Operating Conditions (voltage and temperature). Changed Bank information for V_{CCO} in CS144 package on p.43.

Product Obsolete/Under Obsolescence
XCV200-4FG256C Xilinx Inc. IC FPGA 176 I/O 256FBGA

Date	Version	Revision
01/00	1.9	Updated DLL Jitter Parameter table and waveforms, added Delay Measurement Methodology table for different I/O standards, changed buffered Hex line info and Input/Output Timing measurement notes.
03/00	2.0	New TBCKO values; corrected FG680 package connection drawing; new note about status of CCLK pin after configuration.
05/00	2.1	Modified “Pins not listed...” statement. Speed grade update to Final status.
05/00	2.2	Modified Table 18.
09/00	2.3	• Added XCV400 values to table under **Minimum Clock-to-Out for Virtex Devices**. • Corrected Units column in table under **IOB Input Switching Characteristics**. • Added values to table under **CLB SelectRAM Switching Characteristics**.
10/00	2.4	• Corrected Pinout information for devices in the BG256, BG432, and BG560 packages in Table 18. • Corrected **BG256 Pin Function Diagram**.
04/01	2.5	• Revised minimums for **Global Clock Set-Up and Hold for LVTTL Standard, with DLL**. • Updated SelectMAP Write Timing Characteristics values in Table 9. • Converted file to modularized format. See the **Virtex Data Sheet** section.
07/19/01	2.6	• Made minor edits to text under **Configuration**.
07/19/02	2.7	• Made minor edit to Figure 16 and Figure 18.
09/10/02	2.8	• Added clarifications in the **Configuration**, **Boundary-Scan Mode**, and **Block SelectRAM** sections. Revised Figure 17.
12/09/02	2.8.1	• Added clarification in the **Boundary Scan** section. • Corrected number of buffered Hex lines listed in **General Purpose Routing** section.
03/01/13	4.0	The products listed in this data sheet are obsolete. See **XCN10016** for further information.

Virtex Data Sheet

The Virtex Data Sheet contains the following modules:

- DS003-1, Virtex 2.5V FPGAs:
  Introduction and Ordering Information (Module 1)
- DS003-2, Virtex 2.5V FPGAs:
  Functional Description (Module 2)
- DS003-3, Virtex 2.5V FPGAs:
  DC and Switching Characteristics (Module 3)
- DS003-4, Virtex 2.5V FPGAs:
  Pinout Tables (Module 4)

Product Obsolete/Under Obsolescence
XCV200-4FG256C Xilinx Inc. IC FPGA 176 I/O 256FBGA

Virtex™ 2.5 V Field Programmable Gate Arrays

DS003-3 (v4.0) March 1, 2013

Production Product Specification

Virtex Electrical Characteristics

Definition of Terms

Electrical and switching characteristics are specified on a per-speed-grade basis and can be designated as Advance, Preliminary, or Production. Each designation is defined as follows:

Advance: These speed files are based on simulations only and are typically available soon after device design specifications are frozen. Although speed grades with this designation are considered relatively stable and conservative, some under-reporting might still occur.

Preliminary: These speed files are based on complete ES (engineering sample) silicon characterization. Devices and speed grades with this designation are intended to give a better indication of the expected performance of production silicon. The probability of under-reporting delays is greatly reduced as compared to Advance data.

Production: These speed files are released once enough production silicon of a particular device family member has been characterized to provide full correlation between speed files and devices over numerous production lots. There is no under-reporting of delays, and customers receive formal notification of any subsequent changes. Typically, the slowest speed grades transition to Production before faster speed grades.

All specifications are representative of worst-case supply voltage and junction temperature conditions. The parameters included are common to popular designs and typical applications. Contact the factory for design considerations requiring more detailed information.

Table 1 correlates the current status of each Virtex device with a corresponding speed file designation.

Table 1: **Virtex Device Speed Grade Designations**

Device	Speed Grade Designations		
	Advance	Preliminary	Production
XCV50			–6, –5, –4
XCV100			–6, –5, –4
XCV150			–6, –5, –4
XCV200			–6, –5, –4
XCV300			–6, –5, –4
XCV400			–6, –5, –4
XCV600			–6, –5, –4
XCV800			–6, –5, –4
XCV1000			–6, –5, –4

All specifications are subject to change without notice.

© 1999-2013 Xilinx, Inc. All rights reserved. All Xilinx trademarks, registered trademarks, patents, and disclaimers are as listed at http://www.xilinx.com/legal.htm. All other trademarks and registered trademarks are the property of their respective owners. All specifications are subject to change without notice.

Product Obsolete/Under Obsolescence
XCV200-4FG256C Xilinx Inc. IC FPGA 176 I/O 256FBGA

Virtex DC Characteristics

Absolute Maximum Ratings

Symbol	Description(1)			Units
V_{CCINT}	Supply voltage relative to GND(2)		–0.5 to 3.0	V
V_{CCO}	Supply voltage relative to GND(2)		–0.5 to 4.0	V
V_{REF}	Input Reference Voltage		–0.5 to 3.6	V
V_{IN}	Input voltage relative to GND(3)	Using V_{REF}	–0.5 to 3.6	V
		Internal threshold	–0.5 to 5.5	V
V_{TS}	Voltage applied to 3-state output		–0.5 to 5.5	V
V_{CC}	Longest Supply Voltage Rise Time from 1V-2.375V		50	ms
T_{STG}	Storage temperature (ambient)		–65 to +150	°C
T_J	Junction temperature(4)	Plastic Packages	+125	°C

Notes:
1. Stresses beyond those listed under Absolute Maximum Ratings can cause permanent damage to the device. These are stress ratings only, and functional operation of the device at these or any other conditions beyond those listed under Operating Conditions is not implied. Exposure to Absolute Maximum Ratings conditions for extended periods of time can affect device reliability.
2. Power supplies can turn on in any order.
3. For protracted periods (e.g., longer than a day), V_{IN} should not exceed V_{CCO} by more than 3.6 V.
4. For soldering guidelines and thermal considerations, see the "Device Packaging" information on www.xilinx.com.

Recommended Operating Conditions

Symbol	Description		Min	Max	Units
V_{CCINT}(1)	Input Supply voltage relative to GND, T_J = 0 °C to +85°C	Commercial	2.5 – 5%	2.5 + 5%	V
	Input Supply voltage relative to GND, T_J = –40°C to +100°C	Industrial	2.5 – 5%	2.5 + 5%	V
V_{CCO}(4)	Supply voltage relative to GND, T_J = 0 °C to +85°C	Commercial	1.4	3.6	V
	Supply voltage relative to GND, T_J = –40°C to +100°C	Industrial	1.4	3.6	V
T_{IN}	Input signal transition time			250	ns

Notes:
1. Correct operation is guaranteed with a minimum V_{CCINT} of 2.375 V (Nominal V_{CCINT} –5%). Below the minimum value, all delay parameters increase by 3% for each 50-mV reduction in V_{CCINT} below the specified range.
2. At junction temperatures above those listed as Operating Conditions, delay parameters do increase. Please refer to the TRCE report.
3. Input and output measurement threshold is ~50% of V_{CC}.
4. Min and Max values for V_{CCO} are I/O Standard dependant.

Product Obsolete/Under Obsolescence
XCV200-4FG256C Xilinx Inc. IC FPGA 176 I/O 256FBGA

DC Characteristics Over Recommended Operating Conditions

Symbol	Description	Device	Min	Max	Units
V_{DRINT}	Data Retention V_{CCINT} Voltage (below which configuration data can be lost)	All	2.0		V
V_{DRIO}	Data Retention V_{CCO} Voltage (below which configuration data can be lost)	All	1.2		V
I_{CCINTQ}	Quiescent V_{CCINT} supply current(1,3)	XCV50		50	mA
		XCV100		50	mA
		XCV150		50	mA
		XCV200		75	mA
		XCV300		75	mA
		XCV400		75	mA
		XCV600		100	mA
		XCV800		100	mA
		XCV1000		100	mA
I_{CCOQ}	Quiescent V_{CCO} supply current(1)	XCV50		2	mA
		XCV100		2	mA
		XCV150		2	mA
		XCV200		2	mA
		XCV300		2	mA
		XCV400		2	mA
		XCV600		2	mA
		XCV800		2	mA
		XCV1000		2	mA
I_{REF}	V_{REF} current per V_{REF} pin	All		20	µA
I_L	Input or output leakage current	All	–10	+10	µA
C_{IN}	Input capacitance (sample tested) BGA, PQ, HQ, packages	All		8	pF
I_{RPU}	Pad pull-up (when selected) @ V_{in} = 0 V, V_{CCO} = 3.3 V (sample tested)	All	Note (2)	0.25	mA
I_{RPD}	Pad pull-down (when selected) @ V_{in} = 3.6 V (sample tested)		Note (2)	0.15	mA

Notes:
1. With no output current loads, no active input pull-up resistors, all I/O pins 3-stated and floating.
2. Internal pull-up and pull-down resistors guarantee valid logic levels at unconnected input pins. These pull-up and pull-down resistors do not guarantee valid logic levels when input pins are connected to other circuits.
3. Multiply I_{CCINTQ} limit by two for industrial grade.

Product Obsolete/Under Obsolescence
XCV200-4FG256C Xilinx Inc. IC FPGA 176 I/O 256FBGA

Power-On Power Supply Requirements

Xilinx FPGAs require a certain amount of supply current during power-on to insure proper device operation. The actual current consumed depends on the power-on ramp rate of the power supply. This is the time required to reach the nominal power supply voltage of the device(1) from 0 V. The current is highest at the fastest suggested ramp rate (0 V to nominal voltage in 2 ms) and is lowest at the slowest allowed ramp rate (0 V to nominal voltage in 50 ms). For more details on power supply requirements, see Application Note XAPP158 on www.xilinx.com.

Product	Description(2)	Current Requirement(1,3)
Virtex Family, Commercial Grade	Minimum required current supply	500 mA
Virtex Family, Industrial Grade	Minimum required current supply	2 A

Notes:
1. Ramp rate used for this specification is from 0 - 2.7 VDC. Peak current occurs on or near the internal power-on reset threshold of 1.0V and lasts for less than 3 ms.
2. Devices are guaranteed to initialize properly with the minimum current available from the power supply as noted above.
3. Larger currents can result if ramp rates are forced to be faster.

DC Input and Output Levels

Values for V_{IL} and V_{IH} are recommended input voltages. Values for I_{OL} and I_{OH} are guaranteed output currents over the recommended operating conditions at the V_{OL} and V_{OH} test points. Only selected standards are tested. These are chosen to ensure that all standards meet their specifications. The selected standards are tested at minimum V_{CCO} for each standard with the respective V_{OL} and V_{OH} voltage levels shown. Other standards are sample tested.

Input/Output Standard	V_{IL}		V_{IH}		V_{OL}	V_{OH}	I_{OL}	I_{OH}
	V, min	V, max	V, min	V, max	V, Max	V, Min	mA	mA
LVTTL(1)	– 0.5	0.8	2.0	5.5	0.4	2.4	24	–24
LVCMOS2	– 0.5	.7	1.7	5.5	0.4	1.9	12	–12
PCI, 3.3 V	– 0.5	44% V_{CCINT}	60% V_{CCINT}	V_{CCO} + 0.5	10% V_{CCO}	90% V_{CCO}	Note 2	Note 2
PCI, 5.0 V	– 0.5	0.8	2.0	5.5	0.55	2.4	Note 2	Note 2
GTL	– 0.5	V_{REF} – 0.05	V_{REF} + 0.05	3.6	0.4	n/a	40	n/a
GTL+	– 0.5	V_{REF} – 0.1	V_{REF} + 0.1	3.6	0.6	n/a	36	n/a
HSTL I(3)	– 0.5	V_{REF} – 0.1	V_{REF} + 0.1	3.6	0.4	V_{CCO} – 0.4	8	–8
HSTL III	– 0.5	V_{REF} – 0.1	V_{REF} + 0.1	3.6	0.4	V_{CCO} – 0.4	24	–8
HSTL IV	– 0.5	V_{REF} – 0.1	V_{REF} + 0.1	3.6	0.4	V_{CCO} – 0.4	48	–8
SSTL3 I	– 0.5	V_{REF} – 0.2	V_{REF} + 0.2	3.6	V_{REF} – 0.6	V_{REF} + 0.6	8	–8
SSTL3 II	– 0.5	V_{REF} – 0.2	V_{REF} + 0.2	3.6	V_{REF} – 0.8	V_{REF} + 0.8	16	–16
SSTL2 I	– 0.5	V_{REF} – 0.2	V_{REF} + 0.2	3.6	V_{REF} – 0.61	V_{REF} + 0.61	7.6	–7.6
SSTL2 II	– 0.5	V_{REF} – 0.2	V_{REF} + 0.2	3.6	V_{REF} – 0.80	V_{REF} + 0.80	15.2	–15.2
CTT	– 0.5	V_{REF} – 0.2	V_{REF} + 0.2	3.6	V_{REF} – 0.4	V_{REF} + 0.4	8	–8
AGP	– 0.5	V_{REF} – 0.2	V_{REF} + 0.2	3.6	10% V_{CCO}	90% V_{CCO}	Note 2	Note 2

Notes:
1. V_{OL} and V_{OH} for lower drive currents are sample tested.
2. Tested according to the relevant specifications.
3. DC input and output levels for HSTL18 (HSTL I/O standard with V_{CCO} of 1.8 V) are provided in an HSTL white paper on www.xilinx.com.

Product Obsolete/Under Obsolescence
XCV200-4FG256C Xilinx Inc. IC FPGA 176 I/O 256FBGA

Virtex Switching Characteristics

All devices are 100% functionally tested. Internal timing parameters are derived from measuring internal test patterns. Listed below are representative values. For more specific, more precise, and worst-case guaranteed data, use the values reported by the static timing analyzer (TRCE in the Xilinx Development System) and back-annotated to the simulation net list. All timing parameters assume worst-case operating conditions (supply voltage and junction temperature). Values apply to all Virtex devices unless otherwise noted.

IOB Input Switching Characteristics

Input delays associated with the pad are specified for LVTTL levels. For other standards, adjust the delays with the values shown in , page 6.

Description	Device	Symbol	Speed Grade				Units
			Min	-6	-5	-4	
Propagation Delays							
Pad to I output, no delay	All	T_{IOPI}	0.39	0.8	0.9	1.0	ns, max
Pad to I output, with delay	XCV50	T_{IOPID}	0.8	1.5	1.7	1.9	ns, max
	XCV100		0.8	1.5	1.7	1.9	ns, max
	XCV150		0.8	1.5	1.7	1.9	ns, max
	XCV200		0.8	1.5	1.7	1.9	ns, max
	XCV300		0.8	1.5	1.7	1.9	ns, max
	XCV400		0.9	1.8	2.0	2.3	ns, max
	XCV600		0.9	1.8	2.0	2.3	ns, max
	XCV800		1.1	2.1	2.4	2.7	ns, max
	XCV1000		1.1	2.1	2.4	2.7	ns, max
Pad to output IQ via transparent latch, no delay	All	T_{IOPLI}	0.8	1.6	1.8	2.0	ns, max
Pad to output IQ via transparent latch, with delay	XCV50	T_{IOPLID}	1.9	3.7	4.2	4.8	ns, max
	XCV100		1.9	3.7	4.2	4.8	ns, max
	XCV150		2.0	3.9	4.3	4.9	ns, max
	XCV200		2.0	4.0	4.4	5.1	ns, max
	XCV300		2.0	4.0	4.4	5.1	ns, max
	XCV400		2.1	4.1	4.6	5.3	ns, max
	XCV600		2.1	4.2	4.7	5.4	ns, max
	XCV800		2.2	4.4	4.9	5.6	ns, max
	XCV1000		2.3	4.5	5.1	5.8	ns, max
Sequential Delays							
Clock CLK	All						
Minimum Pulse Width, High		T_{CH}	0.8	1.5	1.7	2.0	ns, min
Minimum Pulse Width, Low		T_{CL}	0.8	1.5	1.7	2.0	ns, min
Clock CLK to output IQ		T_{IOCKIQ}	0.2	0.7	0.7	0.8	ns, max

Product Obsolete/Under Obsolescence
XCV200-4FG256C Xilinx Inc. IC FPGA 176 I/O 256FBGA

Description	Device	Symbol	Speed Grade				Units
			Min	-6	-5	-4	
Setup and Hold Times with respect to Clock CLK at IOB input register(1)			**Setup Time / Hold Time**				
Pad, no delay	All	T_{IOPICK}/T_{IOICKP}	0.8 / 0	1.6 / 0	1.8 / 0	2.0 / 0	ns, min
Pad, with delay	XCV50	$T_{IOPICKD}/T_{IOICKPD}$	1.9 / 0	3.7 / 0	4.1 / 0	4.7 / 0	ns, min
	XCV100		1.9 / 0	3.7 / 0	4.1 / 0	4.7 / 0	ns, min
	XCV150		1.9 / 0	3.8 / 0	4.3 / 0	4.9 / 0	ns, min
	XCV200		2.0 / 0	3.9 / 0	4.4 / 0	5.0 / 0	ns, min
	XCV300		2.0 / 0	3.9 / 0	4.4 / 0	5.0 / 0	ns, min
	XCV400		2.1 / 0	4.1 / 0	4.6 / 0	5.3 / 0	ns, min
	XCV600		2.1 / 0	4.2 / 0	4.7 / 0	5.4 / 0	ns, min
	XCV800		2.2 / 0	4.4 / 0	4.9 / 0	5.6 / 0	ns, min
	XCV1000		2.3 / 0	4.5 / 0	5.0 / 0	5.8 / 0	ns, min
ICE input	All	$T_{IOICECK}/T_{IOCKICE}$	0.37/ 0	0.8 / 0	0.9 / 0	1.0 / 0	ns, max
Set/Reset Delays							
SR input (IFF, synchronous)	All	$T_{IOSRCKI}$	0.49	1.0	1.1	1.3	ns, max
SR input to IQ (asynchronous)	All	T_{IOSRIQ}	0.70	1.4	1.6	1.8	ns, max
GSR to output IQ	All	T_{GSRQ}	4.9	9.7	10.9	12.5	ns, max

Notes:

1. A Zero "0" Hold Time listing indicates no hold time or a negative hold time. Negative values cannot be guaranteed "best-case", but if a "0" is listed, there is no positive hold time.
2. Input timing for LVTTL is measured at 1.4 V. For other I/O standards, see Table 3.

Product Obsolete/Under Obsolescence
XCV200-4FG256C Xilinx Inc. IC FPGA 176 I/O 256FBGA

IOB Input Switching Characteristics Standard Adjustments

Description	Symbol	Standard(1)	Speed Grade				Units
			Min	-6	-5	-4	
Data Input Delay Adjustments							
Standard-specific data input delay adjustments	T_{ILVTTL}	LVTTL	0	0	0	0	ns
	$T_{ILVCMOS2}$	LVCMOS2	–0.02	–0.04	–0.04	–0.05	ns
	T_{IPCI33_3}	PCI, 33 MHz, 3.3 V	–0.05	–0.11	–0.12	–0.14	ns
	T_{IPCI33_5}	PCI, 33 MHz, 5.0 V	0.13	0.25	0.28	0.33	ns
	T_{IPCI66_3}	PCI, 66 MHz, 3.3 V	–0.05	–0.11	–0.12	–0.14	ns
	T_{IGTL}	GTL	0.10	0.20	0.23	0.26	ns
	T_{IGTLP}	GTL+	0.06	0.11	0.12	0.14	ns
	T_{IHSTL}	HSTL	0.02	0.03	0.03	0.04	ns
	T_{ISSTL2}	SSTL2	–0.04	–0.08	–0.09	–0.10	ns
	T_{ISSTL3}	SSTL3	–0.02	–0.04	–0.05	–0.06	ns
	T_{ICTT}	CTT	0.01	0.02	0.02	0.02	ns
	T_{IAGP}	AGP	–0.03	–0.06	–0.07	–0.08	ns

Notes:
1. Input timing for LVTTL is measured at 1.4 V. For other I/O standards, see Table 3.

IOB Output Switching Characteristics

Output delays terminating at a pad are specified for LVTTL with 12 mA drive and fast slew rate. For other standards, adjust the delays with the values shown in **IOB Output Switching Characteristics Standard Adjustments**, page 9.

Description	Symbol	Speed Grade				Units
		Min	-6	-5	-4	
Propagation Delays						
O input to Pad	T_{IOOP}	1.2	2.9	3.2	3.5	ns, max
O input to Pad via transparent latch	T_{IOOLP}	1.4	3.4	3.7	4.0	ns, max
3-State Delays						
T input to Pad high-impedance(1)	T_{IOTHZ}	1.0	2.0	2.2	2.4	ns, max
T input to valid data on Pad	T_{IOTON}	1.4	3.1	3.3	3.7	ns, max
T input to Pad high-impedance via transparent latch(1)	$T_{IOTLPHZ}$	1.2	2.4	2.6	3.0	ns, max
T input to valid data on Pad via transparent latch	$T_{IOTLPON}$	1.6	3.5	3.8	4.2	ns, max
GTS to Pad high impedance(1)	T_{GTS}	2.5	4.9	5.5	6.3	ns, max
Sequential Delays						
Clock CLK						
Minimum Pulse Width, High	T_{CH}	0.8	1.5	1.7	2.0	ns, min
Minimum Pulse Width, Low	T_{CL}	0.8	1.5	1.7	2.0	ns, min

Product Obsolete/Under Obsolescence
XCV200-4FG256C Xilinx Inc. IC FPGA 176 I/O 256FBGA

Description	Symbol	Speed Grade				Units
		Min	-6	-5	-4	
Clock CLK to Pad delay with OBUFT enabled (non-3-state)	T_{IOCKP}	1.0	2.9	3.2	3.5	ns, max
Clock CLK to Pad high-impedance (synchronous)(1)	T_{IOCKHZ}	1.1	2.3	2.5	2.9	ns, max
Clock CLK to valid data on Pad delay, plus enable delay for OBUFT	T_{IOCKON}	1.5	3.4	3.7	4.1	ns, max
Setup and Hold Times before/after Clock CLK(2)		**Setup Time / Hold Time**				
O input	T_{IOOCK}/T_{IOCKO}	0.51 / 0	1.1 / 0	1.2 / 0	1.3 / 0	ns, min
OCE input	$T_{IOOCECK}/T_{IOCKOCE}$	0.37 / 0	0.8 / 0	0.9 / 0	1.0 / 0	ns, min
SR input (OFF)	$T_{IOSRCKO}/T_{IOCKOSR}$	0.52 / 0	1.1 / 0	1.2 / 0	1.4 / 0	ns, min
3-State Setup Times, T input	T_{IOTCK}/T_{IOCKT}	0.34 / 0	0.7 / 0	0.8 / 0	0.9 / 0	ns, min
3-State Setup Times, TCE input	$T_{IOTCECK}/T_{IOCKTCE}$	0.41 / 0	0.9 / 0	0.9 / 0	1.1 / 0	ns, min
3-State Setup Times, SR input (TFF)	$T_{IOSRCKT}/T_{IOCKTSR}$	0.49 / 0	1.0 / 0	1.1 / 0	1.3 / 0	ns, min
Set/Reset Delays						
SR input to Pad (asynchronous)	T_{IOSRP}	1.6	3.8	4.1	4.6	ns, max
SR input to Pad high-impedance (asynchronous)(1)	T_{IOSRHZ}	1.6	3.1	3.4	3.9	ns, max
SR input to valid data on Pad (asynchronous)	T_{IOSRON}	2.0	4.2	4.6	5.1	ns, max
GSR to Pad	T_{IOGSRQ}	4.9	9.7	10.9	12.5	ns, max

Notes:
1. 3-state turn-off delays should not be adjusted.
2. A Zero "0" Hold Time listing indicates no hold time or a negative hold time. Negative values can not be guaranteed "best-case", but if a "0" is listed, there is no positive hold time.

Product Obsolete/Under Obsolescence
XCV200-4FG256C Xilinx Inc. IC FPGA 176 I/O 256FBGA

IOB Output Switching Characteristics Standard Adjustments

Output delays terminating at a pad are specified for LVTTL with 12 mA drive and fast slew rate. For other standards, adjust the delays by the values shown.

Description	Symbol	Standard(1)	Speed Grade				Units
			Min	-6	-5	-4	
Output Delay Adjustments							
Standard-specific adjustments for output delays terminating at pads (based on standard capacitive load, Csl)	T_{OLVTTL_S2}	LVTTL, Slow, 2 mA	4.2	14.7	15.8	17.0	ns
	T_{OLVTTL_S4}	4 mA	2.5	7.5	8.0	8.6	ns
	T_{OLVTTL_S6}	6 mA	1.8	4.8	5.1	5.6	ns
	T_{OLVTTL_S8}	8 mA	1.2	3.0	3.3	3.5	ns
	T_{OLVTTL_S12}	12 mA	1.0	1.9	2.1	2.2	ns
	T_{OLVTTL_S16}	16 mA	0.9	1.7	1.9	2.0	ns
	T_{OLVTTL_S24}	24 mA	0.8	1.3	1.4	1.6	ns
	T_{OLVTTL_F2}	LVTTL, Fast, 2mA	1.9	13.1	14.0	15.1	ns
	T_{OLVTTL_F4}	4 mA	0.7	5.3	5.7	6.1	ns
	T_{OLVTTL_F6}	6 mA	0.2	3.1	3.3	3.6	ns
	T_{OLVTTL_F8}	8 mA	0.1	1.0	1.1	1.2	ns
	T_{OLVTTL_F12}	12 mA	0	0	0	0	ns
	T_{OLVTTL_F16}	16 mA	–0.10	–0.05	–0.05	–0.05	ns
	T_{OLVTTL_F24}	24 mA	–0.10	–0.20	–0.21	–0.23	ns
	$T_{OLVCMOS2}$	LVCMOS2	0.10	0.10	0.11	0.12	ns
	T_{OPCI33_3}	PCI, 33 MHz, 3.3 V	0.50	2.3	2.5	2.7	ns
	T_{OPCI33_5}	PCI, 33 MHz, 5.0 V	0.40	2.8	3.0	3.3	ns
	T_{OPCI66_3}	PCI, 66 MHz, 3.3 V	0.10	–0.40	–0.42	–0.46	ns
	T_{OGTL}	GTL	0.6	0.50	0.54	0.6	ns
	T_{OGTLP}	GTL+	0.7	0.8	0.9	1.0	ns
	T_{OHSTL_I}	HSTL I	0.10	–0.50	–0.53	–0.5	ns
	T_{OHSTL_III}	HSTL III	–0.10	–0.9	–0.9	–1.0	ns
	T_{OHSTL_IV}	HSTL IV	–0.20	–1.0	–1.0	–1.1	ns
	T_{OSSTL2_I}	SSTL2 I	–0.10	–0.50	–0.53	–0.5	ns
	T_{OSSLT2_II}	SSTL2 II	–0.20	–0.9	–0.9	–1.0	ns
	T_{OSSTL3_I}	SSTL3 I	–0.20	–0.50	–0.53	–0.5	ns
	T_{OSSTL3_II}	SSTL3 II	–0.30	–1.0	–1.0	–1.1	ns
	T_{OCTT}	CTT	0	–0.6	–0.6	–0.6	ns
	T_{OAGP}	AGP	0	–0.9	–0.9	–1.0	ns

Notes:
1. Output timing is measured at 1.4 V with 35 pF external capacitive load for LVTTL. For other I/O standards and different loads, see Table 2 and Table 3.

Product Obsolete/Under Obsolescence
XCV200-4FG256C Xilinx Inc. IC FPGA 176 I/O 256FBGA

Calculation of T_{ioop} as a Function of Capacitance

T_{ioop} is the propagation delay from the O Input of the IOB to the pad. The values for T_{ioop} were based on the standard capacitive load (Csl) for each I/O standard as listed in Table 2.

Table 2: **Constants for Calculating T_{ioop}**

Standard	Csl (pF)	fl (ns/pF)
LVTTL Fast Slew Rate, 2mA drive	35	0.41
LVTTL Fast Slew Rate, 4mA drive	35	0.20
LVTTL Fast Slew Rate, 6mA drive	35	0.13
LVTTL Fast Slew Rate, 8mA drive	35	0.079
LVTTL Fast Slew Rate, 12mA drive	35	0.044
LVTTL Fast Slew Rate, 16mA drive	35	0.043
LVTTL Fast Slew Rate, 24mA drive	35	0.033
LVTTL Slow Slew Rate, 2mA drive	35	0.41
LVTTL Slow Slew Rate, 4mA drive	35	0.20
LVTTL Slow Slew Rate, 6mA drive	35	0.100
LVTTL Slow Slew Rate, 8mA drive	35	0.086
LVTTL Slow Slew Rate, 12mA drive	35	0.058
LVTTL Slow Slew Rate, 16mA drive	35	0.050
LVTTL Slow Slew Rate, 24mA drive	35	0.048
LVCMOS2	35	0.041
PCI 33MHz 5V	50	0.050
PCI 33MHZ 3.3 V	10	0.050
PCI 66 MHz 3.3 V	10	0.033
GTL	0	0.014
GTL+	0	0.017
HSTL Class I	20	0.022
HSTL Class III	20	0.016
HSTL Class IV	20	0.014
SSTL2 Class I	30	0.028
SSTL2 Class II	30	0.016
SSTL3 Class I	30	0.029
SSTL3 Class II	30	0.016
CTT	20	0.035
AGP	10	0.037

Notes:
1. I/O parameter measurements are made with the capacitance values shown above. See Application Note XAPP133 on www.xilinx.com for appropriate terminations.
2. I/O standard measurements are reflected in the IBIS model information except where the IBIS format precludes it.

For other capacitive loads, use the formulas below to calculate the corresponding T_{ioop}.

$$T_{ioop} = T_{ioop} + T_{opadjust} + (C_{load} - C_{sl}) * fl$$

Where:

$T_{opadjust}$ is reported above in the Output Delay Adjustment section.

C_{load} is the capacitive load for the design.

Table 3: **Delay Measurement Methodology**

Standard	V_L (1)	V_H (1)	Meas. Point	V_{REF} Typ (2)
LVTTL	0	3	1.4	-
LVCMOS2	0	2.5	1.125	-
PCI33_5	Per PCI Spec			-
PCI33_3	Per PCI Spec			-
PCI66_3	Per PCI Spec			-
GTL	V_{REF} –0.2	V_{REF} +0.2	V_{REF}	0.80
GTL+	V_{REF} –0.2	V_{REF} +0.2	V_{REF}	1.0
HSTL Class I	V_{REF} –0.5	V_{REF} +0.5	V_{REF}	0.75
HSTL Class III	V_{REF} –0.5	V_{REF} +0.5	V_{REF}	0.90
HSTL Class IV	V_{REF} –0.5	V_{REF} +0.5	V_{REF}	0.90
SSTL3 I & II	V_{REF} –1.0	V_{REF} +1.0	V_{REF}	1.5
SSTL2 I & II	V_{REF} –0.75	V_{REF} +0.75	V_{REF}	1.25
CTT	V_{REF} –0.2	V_{REF} +0.2	V_{REF}	1.5
AGP	V_{REF} – (0.2xV_{CCO})	V_{REF} + (0.2xV_{CCO})	V_{REF}	Per AGP Spec

Notes:
1. Input waveform switches between V_L and V_H.
2. Measurements are made at VREF (Typ), Maximum, and Minimum. Worst-case values are reported.
3. I/O parameter measurements are made with the capacitance values shown in Table 2. See Application Note XAPP133 on www.xilinx.com for appropriate terminations.
4. I/O standard measurements are reflected in the IBIS model information except where the IBIS format precludes it.

Product Obsolete/Under Obsolescence
XCV200-4FG256C Xilinx Inc. IC FPGA 176 I/O 256FBGA

Clock Distribution Guidelines

Description	Device	Symbol	Speed Grade			Units
			-6	-5	-4	
Global Clock Skew(1)						
Global Clock Skew between IOB Flip-flops	XCV50	$T_{GSKEWIOB}$	0.10	0.12	0.14	ns, max
	XCV100		0.12	0.13	0.15	ns, max
	XCV150		0.12	0.13	0.15	ns, max
	XCV200		0.13	0.14	0.16	ns, max
	XCV300		0.14	0.16	0.18	ns, max
	XCV400		0.13	0.13	0.14	ns, max
	XCV600		0.14	0.15	0.17	ns, max
	XCV800		0.16	0.17	0.20	ns, max
	XCV1000		0.20	0.23	0.25	ns, max

Notes:
1. These clock-skew delays are provided for guidance only. They reflect the delays encountered in a typical design under worst-case conditions. Precise values for a particular design are provided by the timing analyzer.

Clock Distribution Switching Characteristics

Description	Symbol	Speed Grade				Units
		Min	-6	-5	-4	
GCLK IOB and Buffer						
Global Clock PAD to output.	T_{GPIO}	0.33	0.7	0.8	0.9	ns, max
Global Clock Buffer I input to O output	T_{GIO}	0.34	0.7	0.8	0.9	ns, max

Product Obsolete/Under Obsolescence
XCV200-4FG256C Xilinx Inc. IC FPGA 176 I/O 256FBGA

I/O Standard Global Clock Input Adjustments

Description	Symbol	Standard(1)	Speed Grade				Units
			Min	-6	-5	-4	
Data Input Delay Adjustments							
Standard-specific global clock input delay adjustments	$T_{GPLVTTL}$	LVTTL	0	0	0	0	ns, max
	$T_{GPLVCMOS2}$	LVCMOS2	–0.02	–0.04	–0.04	–0.05	ns, max
	$T_{GPPCI33_3}$	PCI, 33 MHz, 3.3 V	–0.05	–0.11	–0.12	–0.14	ns, max
	$T_{GPPCI33_5}$	PCI, 33 MHz, 5.0 V	0.13	0.25	0.28	0.33	ns, max
	$T_{GPPCI66_3}$	PCI, 66 MHz, 3.3 V	–0.05	–0.11	–0.12	–0.14	ns, max
	T_{GPGTL}	GTL	0.7	0.8	0.9	0.9	ns, max
	T_{GPGTLP}	GTL+	0.7	0.8	0.8	0.8	ns, max
	T_{GPHSTL}	HSTL	0.7	0.7	0.7	0.7	ns, max
	$T_{GPSSTL2}$	SSTL2	0.6	0.52	0.51	0.50	ns, max
	$T_{GPSSTL3}$	SSTL3	0.6	0.6	0.55	0.54	ns, max
	T_{GPCTT}	CTT	0.7	0.7	0.7	0.7	ns, max
	T_{GPAGP}	AGP	0.6	0.54	0.53	0.52	ns, max

Notes:
1. Input timing for GPLVTTL is measured at 1.4 V. For other I/O standards, see Table 3.

Product Obsolete/Under Obsolescence
XCV200-4FG256C Xilinx Inc. IC FPGA 176 I/O 256FBGA

CLB Switching Characteristics

Delays originating at F/G inputs vary slightly according to the input used. The values listed below are worst-case. Precise values are provided by the timing analyzer.

Description	Symbol	Speed Grade				Units
		Min	-6	-5	-4	
Combinatorial Delays						
4-input function: F/G inputs to X/Y outputs	T_{ILO}	0.29	0.6	0.7	0.8	ns, max
5-input function: F/G inputs to F5 output	T_{IF5}	0.32	0.7	0.8	0.9	ns, max
5-input function: F/G inputs to X output	T_{IF5X}	0.36	0.8	0.8	1.0	ns, max
6-input function: F/G inputs to Y output via F6 MUX	T_{IF6Y}	0.44	0.9	1.0	1.2	ns, max
6-input function: F5IN input to Y output	T_{F5INY}	0.17	0.32	0.36	0.42	ns, max
Incremental delay routing through transparent latch to XQ/YQ outputs	T_{IFNCTL}	0.31	0.7	0.7	0.8	ns, max
BY input to YB output	T_{BYYB}	0.27	0.53	0.6	0.7	ns, max
Sequential Delays						
FF Clock CLK to XQ/YQ outputs	T_{CKO}	0.54	1.1	1.2	1.4	ns, max
Latch Clock CLK to XQ/YQ outputs	T_{CKLO}	0.6	1.2	1.4	1.6	ns, max
Setup and Hold Times before/after Clock CLK(1)	Setup Time / Hold Time					
4-input function: F/G Inputs	T_{ICK}/T_{CKI}	0.6 / 0	1.2 / 0	1.4 / 0	1.5 / 0	ns, min
5-input function: F/G inputs	T_{IF5CK}/T_{CKIF5}	0.7 / 0	1.3 / 0	1.5 / 0	1.7 / 0	ns, min
6-input function: F5IN input	T_{F5INCK}/T_{CKF5IN}	0.46 / 0	1.0 / 0	1.1 / 0	1.2 / 0	ns, min
6-input function: F/G inputs via F6 MUX	T_{IF6CK}/T_{CKIF6}	0.8 / 0	1.5 / 0	1.7 / 0	1.9 / 0	ns, min
BX/BY inputs	T_{DICK}/T_{CKDI}	0.30 / 0	0.6 / 0	0.7 / 0	0.8 / 0	ns, min
CE input	T_{CECK}/T_{CKCE}	0.37 / 0	0.8 / 0	0.9 / 0	1.0 / 0	ns, min
SR/BY inputs (synchronous)	$T_{RCK}T_{CKR}$	0.33 / 0	0.7 / 0	0.8 / 0	0.9 / 0	ns, min
Clock CLK						
Minimum Pulse Width, High	T_{CH}	0.8	1.5	1.7	2.0	ns, min
Minimum Pulse Width, Low	T_{CL}	0.8	1.5	1.7	2.0	ns, min
Set/Reset						
Minimum Pulse Width, SR/BY inputs	T_{RPW}	1.3	2.5	2.8	3.3	ns, min
Delay from SR/BY inputs to XQ/YQ outputs (asynchronous)	T_{RQ}	0.54	1.1	1.3	1.4	ns, max
Delay from GSR to XQ/YQ outputs	T_{IOGSRQ}	4.9	9.7	10.9	12.5	ns, max
Toggle Frequency (MHz) (for export control)	F_{TOG} (MHz)	625	333	294	250	MHz

Notes:
1. A Zero "0" Hold Time listing indicates no hold time or a negative hold time. Negative values cannot be guaranteed "best-case", but if a "0" is listed, there is no positive hold time.

Product Obsolete/Under Obsolescence
XCV200-4FG256C Xilinx Inc. IC FPGA 176 I/O 256FBGA

CLB Arithmetic Switching Characteristics

Setup times not listed explicitly can be approximated by decreasing the combinatorial delays by the setup time adjustment listed. Precise values are provided by the timing analyzer.

Description	Symbol	Speed Grade				Units
		Min	-6	-5	-4	
Combinatorial Delays						
F operand inputs to X via XOR	T_{OPX}	0.37	0.8	0.9	1.0	ns, max
F operand input to XB output	T_{OPXB}	0.54	1.1	1.3	1.4	ns, max
F operand input to Y via XOR	T_{OPY}	0.8	1.5	1.7	2.0	ns, max
F operand input to YB output	T_{OPYB}	0.8	1.5	1.7	2.0	ns, max
F operand input to COUT output	T_{OPCYF}	0.6	1.2	1.3	1.5	ns, max
G operand inputs to Y via XOR	T_{OPGY}	0.46	1.0	1.1	1.2	ns, max
G operand input to YB output	T_{OPGYB}	0.8	1.6	1.8	2.1	ns, max
G operand input to COUT output	T_{OPCYG}	0.7	1.3	1.4	1.6	ns, max
BX initialization input to COUT	T_{BXCY}	0.41	0.9	1.0	1.1	ns, max
CIN input to X output via XOR	T_{CINX}	0.21	0.41	0.46	0.53	ns, max
CIN input to XB	T_{CINXB}	0.02	0.04	0.05	0.06	ns, max
CIN input to Y via XOR	T_{CINY}	0.23	0.46	0.52	0.6	ns, max
CIN input to YB	T_{CINYB}	0.23	0.45	0.51	0.6	ns, max
CIN input to COUT output	T_{BYP}	0.05	0.09	0.10	0.11	ns, max
Multiplier Operation						
F1/2 operand inputs to XB output via AND	T_{FANDXB}	0.18	0.36	0.40	0.46	ns, max
F1/2 operand inputs to YB output via AND	T_{FANDYB}	0.40	0.8	0.9	1.1	ns, max
F1/2 operand inputs to COUT output via AND	T_{FANDCY}	0.22	0.43	0.48	0.6	ns, max
G1/2 operand inputs to YB output via AND	T_{GANDYB}	0.25	0.50	0.6	0.7	ns, max
G1/2 operand inputs to COUT output via AND	T_{GANDCY}	0.07	0.13	0.15	0.17	ns, max
Setup and Hold Times before/after Clock CLK(1)	Setup Time / Hold Time					
CIN input to FFX	T_{CCKX}/T_{CKCX}	0.50 / 0	1.0 / 0	1.2 / 0	1.3 / 0	ns, min
CIN input to FFY	T_{CCKY}/T_{CKCY}	0.53 / 0	1.1 / 0	1.2 / 0	1.4 / 0	ns, min

Notes:
1. A Zero "0" Hold Time listing indicates no hold time or a negative hold time. Negative values can not be guaranteed "best-case", but if a "0" is listed, there is no positive hold time.

Product Obsolete/Under Obsolescence
XCV200-4FG256C Xilinx Inc. IC FPGA 176 I/O 256FBGA

CLB SelectRAM Switching Characteristics

Description	Symbol	Speed Grade				Units
		Min	-6	-5	-4	
Sequential Delays						
Clock CLK to X/Y outputs (WE active) 16 x 1 mode	$T_{SHCKO16}$	1.2	2.3	2.6	3.0	ns, max
Clock CLK to X/Y outputs (WE active) 32 x 1 mode	$T_{SHCKO32}$	1.2	2.7	3.1	3.5	ns, max
Shift-Register Mode						
Clock CLK to X/Y outputs	T_{REG}	1.2	3.7	4.1	4.7	ns, max
Setup and Hold Times before/after Clock CLK(1)	Setup Time / Hold Time					
F/G address inputs	T_{AS}/T_{AH}	0.25 / 0	0.5 / 0	0.6 / 0	0.7 / 0	ns, min
BX/BY data inputs (DIN)	T_{DS}/T_{DH}	0.34 / 0	0.7 / 0	0.8 / 0	0.9 / 0	ns, min
CE input (WE)	T_{WS}/T_{WH}	0.38 / 0	0.8 / 0	0.9 / 0	1.0 / 0	ns, min
Shift-Register Mode						
BX/BY data inputs (DIN)	T_{SHDICK}	0.34	0.7	0.8	0.9	ns, min
CE input (WS)	T_{SHCECK}	0.38	0.8	0.9	1.0	ns, min
Clock CLK						
Minimum Pulse Width, High	T_{WPH}	1.2	2.4	2.7	3.1	ns, min
Minimum Pulse Width, Low	T_{WPL}	1.2	2.4	2.7	3.1	ns, min
Minimum clock period to meet address write cycle time	T_{WC}	2.4	4.8	5.4	6.2	ns, min
Shift-Register Mode						
Minimum Pulse Width, High	T_{SRPH}	1.2	2.4	2.7	3.1	ns, min
Minimum Pulse Width, Low	T_{SRPL}	1.2	2.4	2.7	3.1	ns, min

Notes:

1. A Zero "0" Hold Time listing indicates no hold time or a negative hold time. Negative values can not be guaranteed "best-case", but if a "0" is listed, there is no positive hold time.

Product Obsolete/Under Obsolescence
XCV200-4FG256C Xilinx Inc. IC FPGA 176 I/O 256FBGA

Block RAM Switching Characteristics

Description	Symbol	Speed Grade				Units
		Min	-6	-5	-4	
Sequential Delays						
Clock CLK to DOUT output	T_{BCKO}	1.7	3.4	3.8	4.3	ns, max
Setup and Hold Times before/after Clock CLK(1)		Setup Time / Hold Time				
ADDR inputs	T_{BACK}/T_{BCKA}	0.6 / 0	1.2 / 0	1.3 / 0	1.5 / 0	ns, min
DIN inputs	T_{BDCK}/T_{BCKD}	0.6 / 0	1.2 / 0	1.3 / 0	1.5 / 0	ns, min
EN input	T_{BECK}/T_{BCKE}	1.3 / 0	2.6 / 0	3.0 / 0	3.4 / 0	ns, min
RST input	T_{BRCK}/T_{BCKR}	1.3 / 0	2.5 / 0	2.7 / 0	3.2 / 0	ns, min
WEN input	T_{BWCK}/T_{BCKW}	1.2 / 0	2.3 / 0	2.6 / 0	3.0 / 0	ns, min
Clock CLK						
Minimum Pulse Width, High	T_{BPWH}	0.8	1.5	1.7	2.0	ns, min
Minimum Pulse Width, Low	T_{BPWL}	0.8	1.5	1.7	2.0	ns, min
CLKA -> CLKB setup time for different ports	T_{BCCS}		3.0	3.5	4.0	ns, min

Notes:
1. A Zero "0" Hold Time listing indicates no hold time or a negative hold time. Negative values can not be guaranteed "best-case", but if a "0" is listed, there is no positive hold time.

TBUF Switching Characteristics

Description	Symbol	Speed Grade				Units
		Min	-6	-5	-4	
Combinatorial Delays						
IN input to OUT output	T_{IO}	0	0	0	0	ns, max
TRI input to OUT output high-impedance	T_{OFF}	0.05	0.09	0.10	0.11	ns, max
TRI input to valid data on OUT output	T_{ON}	0.05	0.09	0.10	0.11	ns, max

JTAG Test Access Port Switching Characteristics

Description	Symbol	Speed Grade			Units
		-6	-5	-4	
TMS and TDI Setup times before TCK	T_{TAPTCK}	4.0	4.0	4.0	ns, min
TMS and TDI Hold times after TCK	T_{TCKTAP}	2.0	2.0	2.0	ns, min
Output delay from clock TCK to output TDO	T_{TCKTDO}	11.0	11.0	11.0	ns, max
Maximum TCK clock frequency	F_{TCK}	33	33	33	MHz, max

Product Obsolete/Under Obsolescence
XCV200-4FG256C Xilinx Inc. IC FPGA 176 I/O 256FBGA

Virtex Pin-to-Pin Output Parameter Guidelines

All devices are 100% functionally tested. Listed below are representative values for typical pin locations and normal clock loading. Values are expressed in nanoseconds unless otherwise noted.

Global Clock Input to Output Delay for LVTTL, 12 mA, Fast Slew Rate, *with* DLL

Description	Symbol	Device	Speed Grade				Units
			Min	-6	-5	-4	
LVTTL Global Clock Input to Output Delay using Output Flip-flop, 12 mA, Fast Slew Rate, *with* DLL. For data *output* with different standards, adjust delays with the values shown in Output Delay Adjustments.	$T_{ICKOFDLL}$	XCV50	1.0	3.1	3.3	3.6	ns, max
		XCV100	1.0	3.1	3.3	3.6	ns, max
		XCV150	1.0	3.1	3.3	3.6	ns, max
		XCV200	1.0	3.1	3.3	3.6	ns, max
		XCV300	1.0	3.1	3.3	3.6	ns, max
		XCV400	1.0	3.1	3.3	3.6	ns, max
		XCV600	1.0	3.1	3.3	3.6	ns, max
		XCV800	1.0	3.1	3.3	3.6	ns, max
		XCV1000	1.0	3.1	3.3	3.6	ns, max

Notes:
1. Listed above are representative values where one global clock input drives one vertical clock line in each accessible column, and where all accessible IOB and CLB flip-flops are clocked by the global clock net.
2. Output timing is measured at 1.4 V with 35 pF external capacitive load for LVTTL. The 35 pF load does not apply to the Min values. For other I/O standards and different loads, see Table 2 and Table 3.
3. DLL output jitter is already included in the timing calculation.

Global Clock Input-to-Output Delay for LVTTL, 12 mA, Fast Slew Rate, *without* DLL

Description	Symbol	Device	Speed Grade				Units
			Min	-6	-5	-4	
LVTTL Global Clock Input to Output Delay using Output Flip-flop, 12 mA, Fast Slew Rate, *without* DLL. For data *output* with different standards, adjust delays with the values shown in Input and Output Delay Adjustments. For I/O standards requiring V_{REF}, such as GTL, GTL+, SSTL, HSTL, CTT, and AGO, an additional 600 ps must be added.	T_{ICKOF}	XCV50	1.5	4.6	5.1	5.7	ns, max
		XCV100	1.5	4.6	5.1	5.7	ns, max
		XCV150	1.5	4.7	5.2	5.8	ns, max
		XCV200	1.5	4.7	5.2	5.8	ns, max
		XCV300	1.5	4.7	5.2	5.9	ns, max
		XCV400	1.5	4.8	5.3	6.0	ns, max
		XCV600	1.6	4.9	5.4	6.0	ns, max
		XCV800	1.6	4.9	5.5	6.2	ns, max
		XCV1000	1.7	5.0	5.6	6.3	ns, max

Notes:
1. Listed above are representative values where one global clock input drives one vertical clock line in each accessible column, and where all accessible IOB and CLB flip-flops are clocked by the global clock net.
2. Output timing is measured at 1.4 V with 35 pF external capacitive load for LVTTL. The 35 pF load does not apply to the Min values. For other I/O standards and different loads, see Table 2 and Table 3.

Product Obsolete/Under Obsolescence
XCV200-4FG256C Xilinx Inc. IC FPGA 176 I/O 256FBGA

Minimum Clock-to-Out for Virtex Devices

I/O Standard	With DLL	Without DLL									
	All Devices	V50	V100	V150	V200	V300	V400	V600	V800	V1000	Units
*LVTTL_S2	5.2	6.0	6.0	6.0	6.0	6.1	6.1	6.1	6.1	6.1	ns
*LVTTL_S4	3.5	4.3	4.3	4.3	4.3	4.4	4.4	4.4	4.4	4.4	ns
*LVTTL_S6	2.8	3.6	3.6	3.6	3.6	3.7	3.7	3.7	3.7	3.7	ns
*LVTTL_S8	2.2	3.1	3.1	3.1	3.1	3.1	3.1	3.2	3.2	3.2	ns
*LVTTL_S12	2.0	2.9	2.9	2.9	2.9	2.9	2.9	3.0	3.0	3.0	ns
*LVTTL_S16	1.9	2.8	2.8	2.8	2.8	2.8	2.8	2.9	2.9	2.9	ns
*LVTTL_S24	1.8	2.6	2.6	2.7	2.7	2.7	2.7	2.7	2.7	2.8	ns
*LVTTL_F2	2.9	3.8	3.8	3.8	3.8	3.8	3.8	3.9	3.9	3.9	ns
*LVTTL_F4	1.7	2.6	2.6	2.6	2.6	2.6	2.6	2.7	2.7	2.7	ns
*LVTTL_F6	1.2	2.0	2.0	2.0	2.1	2.1	2.1	2.1	2.1	2.2	ns
*LVTTL_F8	1.1	1.9	1.9	1.9	1.9	2.0	2.0	2.0	2.0	2.0	ns
*LVTTL_F12	1.0	1.8	1.8	1.8	1.8	1.9	1.9	1.9	1.9	1.9	ns
*LVTTL_F16	0.9	1.7	1.8	1.8	1.8	1.8	1.8	1.8	1.9	1.9	ns
*LVTTL_F24	0.9	1.7	1.7	1.7	1.8	1.8	1.8	1.8	1.8	1.9	ns
LVCMOS2	1.1	1.9	1.9	1.9	2.0	2.0	2.0	2.0	2.0	2.1	ns
PCI33_3	1.5	2.4	2.4	2.4	2.4	2.4	2.4	2.5	2.5	2.5	ns
PCI33_5	1.4	2.2	2.2	2.3	2.3	2.3	2.3	2.3	2.3	2.4	ns
PCI66_3	1.1	1.9	1.9	2.0	2.0	2.0	2.0	2.0	2.1	2.1	ns
GTL	1.6	2.5	2.5	2.5	2.5	2.5	2.5	2.6	2.6	2.6	ns
GTL+	1.7	2.5	2.5	2.6	2.6	2.6	2.6	2.6	2.6	2.7	ns
HSTL I	1.1	1.9	1.9	1.9	1.9	2.0	2.0	2.0	2.0	2.0	ns
HSTL III	0.9	1.7	1.7	1.8	1.8	1.8	1.8	1.8	1.8	1.9	ns
HSTL IV	0.8	1.6	1.6	1.6	1.7	1.7	1.7	1.7	1.7	1.8	ns
SSTL2 I	0.9	1.7	1.7	1.7	1.7	1.8	1.8	1.8	1.8	1.8	ns
SSTL2 II	0.8	1.6	1.6	1.6	1.6	1.7	1.7	1.7	1.7	1.7	ns
SSTL3 I	0.8	1.6	1.7	1.7	1.7	1.7	1.7	1.7	1.8	1.8	ns
SSTL3 II	0.7	1.5	1.5	1.6	1.6	1.6	1.6	1.6	1.6	1.7	ns
CTT	1.0	1.8	1.8	1.8	1.9	1.9	1.9	1.9	1.9	2.0	ns
AGP	1.0	1.8	1.8	1.9	1.9	1.9	1.9	1.9	1.9	2.0	ns

*S = Slow Slew Rate, F = Fast Slew Rate

Notes:

1. Listed above are representative values where one global clock input drives one vertical clock line in each accessible column, and where all accessible IOB and CLB flip-flops are clocked by the global clock net.
2. Input and output timing is measured at 1.4 V for LVTTL. For other I/O standards, see Table 3. In all cases, an 8 pF external capacitive load is used.

Product Obsolete/Under Obsolescence
XCV200-4FG256C Xilinx Inc. IC FPGA 176 I/O 256FBGA

Virtex Pin-to-Pin Input Parameter Guidelines

All devices are 100% functionally tested. Listed below are representative values for typical pin locations and normal clock loading. Values are expressed in nanoseconds unless otherwise noted

Global Clock Set-Up and Hold for LVTTL Standard, *with* DLL

Description	Symbol	Device	Speed Grade				Units
			Min	-6	-5	-4	
Input Setup and Hold Time Relative to Global Clock Input Signal for LVTTL Standard. For data input with different standards, adjust the setup time delay by the values shown in Input Delay Adjustments.							
No Delay Global Clock and IFF, with DLL	T_{PSDLL}/T_{PHDLL}	XCV50	0.40 / –0.4	1.7 /–0.4	1.8 /–0.4	2.1 /–0.4	ns, min
		XCV100	0.40 /–0.4	1.7 /–0.4	1.9 /–0.4	2.1 /–0.4	ns, min
		XCV150	0.40 /–0.4	1.7 /–0.4	1.9 /–0.4	2.1 /–0.4	ns, min
		XCV200	0.40 /–0.4	1.7 /–0.4	1.9 /–0.4	2.1 /–0.4	ns, min
		XCV300	0.40 /–0.4	1.7 /–0.4	1.9 /–0.4	2.1 /–0.4	ns, min
		XCV400	0.40 /–0.4	1.7 /–0.4	1.9 /–0.4	2.1 /–0.4	ns, min
		XCV600	0.40 /–0.4	1.7 /–0.4	1.9 /–0.4	2.1 /–0.4	ns, min
		XCV800	0.40 /–0.4	1.7 /–0.4	1.9 /–0.4	2.1 /–0.4	ns, min
		XCV1000	0.40 /–0.4	1.7 /–0.4	1.9 /–0.4	2.1 /–0.4	ns, min

IFF = Input Flip-Flop or Latch

Notes:

1. Set-up time is measured relative to the Global Clock input signal with the fastest route and the lightest load. Hold time is measured relative to the Global Clock input signal with the slowest route and heaviest load.
2. DLL output jitter is already included in the timing calculation.
3. A Zero "0" Hold Time listing indicates no hold time or a negative hold time. Negative values can not be guaranteed "best-case", but if a "0" is listed, there is no positive hold time.

Product Obsolete/Under Obsolescence
XCV200-4FG256C Xilinx Inc. IC FPGA 176 I/O 256FBGA

Global Clock Set-Up and Hold for LVTTL Standard, *without* DLL

Description	Symbol	Device	Speed Grade				Units
			Min	-6	-5	-4	
Input Setup and Hold Time Relative to Global Clock Input Signal for LVTTL Standard.(2) For data input with different standards, adjust the setup time delay by the values shown in Input Delay Adjustments.							
Full Delay Global Clock and IFF, without DLL	T_{PSFD}/T_{PHFD}	XCV50	0.6 / 0	2.3 / 0	2.6 / 0	2.9 / 0	ns, min
		XCV100	0.6 / 0	2.3 / 0	2.6 / 0	3.0 / 0	ns, min
		XCV150	0.6 / 0	2.4 / 0	2.7 / 0	3.1 / 0	ns, min
		XCV200	0.7 / 0	2.5 / 0	2.8 / 0	3.2 / 0	ns, min
		XCV300	0.7 / 0	2.5 / 0	2.8 / 0	3.2 / 0	ns, min
		XCV400	0.7 / 0	2.6 / 0	2.9 / 0	3.3 / 0	ns, min
		XCV600	0.7 / 0	2.6 / 0	2.9 / 0	3.3 / 0	ns, min
		XCV800	0.7 / 0	2.7 / 0	3.1 / 0	3.5 / 0	ns, min
		XCV1000	0.7 / 0	2.8 / 0	3.1 / 0	3.6 / 0	ns, min

IFF = Input Flip-Flop or Latch

Notes: Notes:

1. Set-up time is measured relative to the Global Clock input signal with the fastest route and the lightest load. Hold time is measured relative to the Global Clock input signal with the slowest route and heaviest load.
2. A Zero "0" Hold Time listing indicates no hold time or a negative hold time. Negative values can not be guaranteed "best-case", but if a "0" is listed, there is no positive hold time.

Product Obsolete/Under Obsolescence
XCV200-4FG256C Xilinx Inc. IC FPGA 176 I/O 256FBGA

DLL Timing Parameters

All devices are 100 percent functionally tested. Because of the difficulty in directly measuring many internal timing parameters, those parameters are derived from benchmark timing patterns. The following guidelines reflect worst-case values across the recommended operating conditions.

Description	Symbol	Speed Grade						Units
		-6		-5		-4		
		Min	Max	Min	Max	Min	Max	
Input Clock Frequency (CLKDLLHF)	FCLKINHF	60	200	60	180	60	180	MHz
Input Clock Frequency (CLKDLL)	FCLKINLF	25	100	25	90	25	90	MHz
Input Clock Pulse Width (CLKDLLHF)	$T_{DLLPWHF}$	2.0	-	2.4	-	2.4	-	ns
Input Clock Pulse Width (CLKDLL)	$T_{DLLPWLF}$	2.5	-	3.0		3.0	-	ns

Notes:
1. All specifications correspond to Commercial Operating Temperatures (0°C to + 85°C).

DLL Clock Tolerance, Jitter, and Phase Information

All DLL output jitter and phase specifications determined through statistical measurement at the package pins using a clock mirror configuration and matched drivers.

Description	Symbol	F_{CLKIN}	CLKDLLHF		CLKDLL		Units
			Min	Max	Min	Max	
Input Clock Period Tolerance	T_{IPTOL}		-	1.0	-	1.0	ns
Input Clock Jitter Tolerance (Cycle to Cycle)	T_{IJITCC}		-	± 150	-	± 300	ps
Time Required for DLL to Acquire Lock	T_{LOCK}	> 60 MHz	-	20	-	20	µs
		50 - 60 MHz	-	-	-	25	µs
		40 - 50 MHz	-	-	-	50	µs
		30 - 40 MHz	-	-	-	90	µs
		25 - 30 MHz	-	-	-	120	µs
Output Jitter (cycle-to-cycle) for any DLL Clock Output(1)	T_{OJITCC}			± 60		± 60	ps
Phase Offset between CLKIN and CLKO(2)	T_{PHIO}			± 100		± 100	ps
Phase Offset between Clock Outputs on the DLL(3)	T_{PHOO}			± 140		± 140	ps
Maximum Phase Difference between CLKIN and CLKO(4)	T_{PHIOM}			± 160		± 160	ps
Maximum Phase Difference between Clock Outputs on the DLL(5)	T_{PHOOM}			± 200		± 200	ps

Notes:
1. **Output Jitter** is cycle-to-cycle jitter measured on the DLL output clock, *excluding* input clock jitter.
2. **Phase Offset between CLKIN and CLKO** is the worst-case fixed time difference between rising edges of CLKIN and CLKO, *excluding* Output Jitter and input clock jitter.
3. **Phase Offset between Clock Outputs on the DLL** is the worst-case fixed time difference between rising edges of any two DLL outputs, *excluding* Output Jitter and input clock jitter.
4. **Maximum Phase Difference between CLKIN an CLKO** is the sum of Output Jitter and Phase Offset between CLKIN and CLKO, or the greatest difference between CLKIN and CLKO rising edges due to DLL alone (*excluding* input clock jitter).
5. **Maximum Phase DIfference between Clock Outputs on the DLL** is the sum of Output JItter and Phase Offset between any DLL clock outputs, or the greatest difference between any two DLL output rising edges sue to DLL alone (*excluding* input clock jitter).
6. All specifications correspond to Commercial Operating Temperatures (0°C to +85°C).

Product Obsolete/Under Obsolescence
XCV200-4FG256C Xilinx Inc. IC FPGA 176 I/O 256FBGA

Period Tolerance: the allowed input clock period change in nanoseconds.

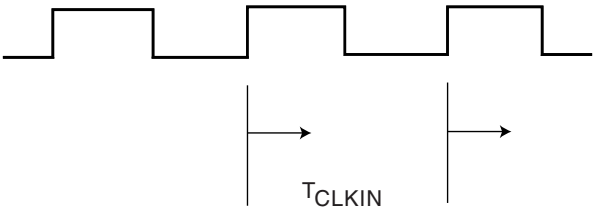

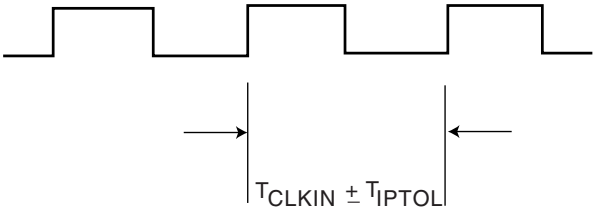

Output Jitter: the difference between an ideal reference clock edge and the actual design.

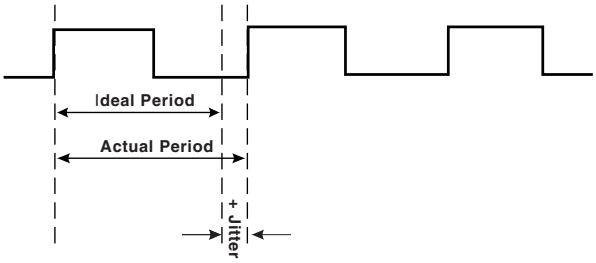

Phase Offset and Maximum Phase Difference

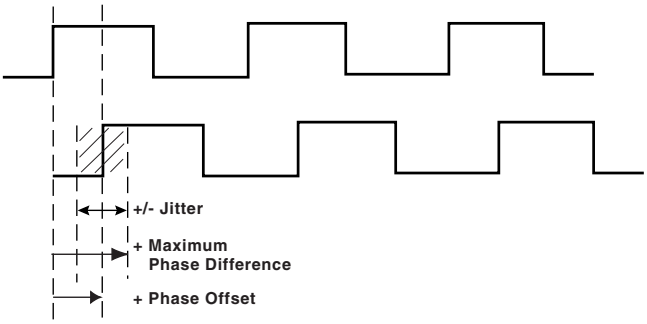

ds003_20c_110399

Figure 1: **Frequency Tolerance and Clock Jitter**

Revision History

Date	Version	Revision
11/98	1.0	Initial Xilinx release.
01/99	1.2	Updated package drawings and specs.
02/99	1.3	Update of package drawings, updated specifications.
05/99	1.4	Addition of package drawings and specifications.
05/99	1.5	Replaced FG 676 & FG680 package drawings.
07/99	1.6	Changed Boundary Scan Information and changed Figure 11, Boundary Scan Bit Sequence. Updated IOB Input & Output delays. Added Capacitance info for different I/O Standards. Added 5 V tolerant information. Added DLL Parameters and waveforms and new Pin-to-pin Input and Output Parameter tables for Global Clock Input to Output and Setup and Hold. Changed Configuration Information including Figures 12, 14, 17 & 19. Added device-dependent listings for quiescent currents ICCINTQ and ICCOQ. Updated IOB Input and Output Delays based on default standard of LVTTL, 12 mA, Fast Slew Rate. Added IOB Input Switching Characteristics Standard Adjustments.
09/99	1.7	Speed grade update to preliminary status, Power-on specification and Clock-to-Out Minimums additions, "0" hold time listing explanation, quiescent current listing update, and Figure 6 ADDRA input label correction. Added T_{IJITCC} parameter, changed T_{OJIT} to T_{OPHASE}.
01/00	1.8	Update to speed.txt file 1.96. Corrections for CRs 111036,111137, 112697, 115479, 117153, 117154, and 117612. Modified notes for Recommended Operating Conditions (voltage and temperature). Changed Bank information for V_{CCO} in CS144 package on p.43.

Product Obsolete/Under Obsolescence
XCV200-4FG256C Xilinx Inc. IC FPGA 176 I/O 256FBGA

Date	Version	Revision
01/00	1.9	Updated DLL Jitter Parameter table and waveforms, added Delay Measurement Methodology table for different I/O standards, changed buffered Hex line info and Input/Output Timing measurement notes.
03/00	2.0	New TBCKO values; corrected FG680 package connection drawing; new note about status of CCLK pin after configuration.
05/00	2.1	Modified "Pins not listed..." statement. Speed grade update to Final status.
05/00	2.2	Modified Table 18.
09/00	2.3	• Added XCV400 values to table under **Minimum Clock-to-Out for Virtex Devices**. • Corrected Units column in table under **IOB Input Switching Characteristics**. • Added values to table under **CLB SelectRAM Switching Characteristics**.
10/00	2.4	• Corrected Pinout information for devices in the BG256, BG432, and BG560 packages in Table 18. • Corrected **BG256 Pin Function Diagram**.
04/02/01	2.5	• Revised minimums for **Global Clock Set-Up and Hold for LVTTL Standard, with DLL**. • Converted file to modularized format. See the **Virtex Data Sheet** section.
04/19/01	2.6	• Clarified TIOCKP and TIOCKON **IOB Output Switching Characteristics** descriptors.
07/19/01	2.7	• Under **Absolute Maximum Ratings**, changed (T_{SOL}) to 220 °C.
07/26/01	2.8	• Removed T_{SOL} parameter and added footnote to **Absolute Maximum Ratings** table.
10/29/01	2.9	• Updated the speed grade designations used in data sheets, and added Table 1, which shows the current speed grade designation for each device.
02/01/02	3.0	• Added footnote to **DC Input and Output Levels** table.
07/19/02	3.1	• Removed mention of MIL-M-38510/605 specification. • Added link to xapp158 from the **Power-On Power Supply Requirements** section.
09/10/02	3.2	• Added Clock CLK to **IOB Input Switching Characteristics** and **IOB Output Switching Characteristics**.
03/01/13	4.0	The products listed in this data sheet are obsolete. See **XCN10016** for further information.

Virtex Data Sheet

The Virtex Data Sheet contains the following modules:

- DS003-1, Virtex 2.5V FPGAs:
  Introduction and Ordering Information (Module 1)
- DS003-2, Virtex 2.5V FPGAs:
  Functional Description (Module 2)
- DS003-3, Virtex 2.5V FPGAs:
  DC and Switching Characteristics (Module 3)
- DS003-4, Virtex 2.5V FPGAs:
  Pinout Tables (Module 4)

Product Obsolete/Under Obsolescence
XCV200-4FG256C Xilinx Inc. IC FPGA 176 I/O 256FBGA

Product Obsolete/Under Obsolescence
XCV200-4FG256C Xilinx Inc. IC FPGA 176 I/O 256FBGA

Virtex Pin Definitions

Table 1: **Special Purpose Pins**

Pin Name	Dedicated Pin	Direction	Description
GCK0, GCK1, GCK2, GCK3	Yes	Input	Clock input pins that connect to Global Clock Buffers. These pins become user inputs when not needed for clocks.
M0, M1, M2	Yes	Input	Mode pins are used to specify the configuration mode.
CCLK	Yes	Input or Output	The configuration Clock I/O pin: it is an input for SelectMAP and slave-serial modes, and output in master-serial mode. After configuration, it is input only, logic level = Don't Care.
PROGRAM	Yes	Input	Initiates a configuration sequence when asserted Low.
DONE	Yes	Bidirectional	Indicates that configuration loading is complete, and that the start-up sequence is in progress. The output can be open drain.
INIT	No	Bidirectional (Open-drain)	When Low, indicates that the configuration memory is being cleared. The pin becomes a user I/O after configuration.
BUSY/ DOUT	No	Output	In SelectMAP mode, BUSY controls the rate at which configuration data is loaded. The pin becomes a user I/O after configuration unless the SelectMAP port is retained. In bit-serial modes, DOUT provides header information to downstream devices in a daisy-chain. The pin becomes a user I/O after configuration.
D0/DIN, D1, D2, D3, D4, D5, D6, D7	No	Input or Output	In SelectMAP mode, D0 - D7 are configuration data pins. These pins become user I/Os after configuration unless the SelectMAP port is retained. In bit-serial modes, DIN is the single data input. This pin becomes a user I/O after configuration.
WRITE	No	Input	In SelectMAP mode, the active-low Write Enable signal. The pin becomes a user I/O after configuration unless the SelectMAP port is retained.
CS	No	Input	In SelectMAP mode, the active-low Chip Select signal. The pin becomes a user I/O after configuration unless the SelectMAP port is retained.
TDI, TDO, TMS, TCK	Yes	Mixed	Boundary-scan Test-Access-Port pins, as defined in IEEE 1149.1.
DXN, DXP	Yes	N/A	Temperature-sensing diode pins. (Anode: DXP, cathode: DXN)
V_{CCINT}	Yes	Input	Power-supply pins for the internal core logic.
V_{CCO}	Yes	Input	Power-supply pins for the output drivers (subject to banking rules)
V_{REF}	No	Input	Input threshold voltage pins. Become user I/Os when an external threshold voltage is not needed (subject to banking rules).
GND	Yes	Input	Ground

© 1999-2013 Xilinx, Inc. All rights reserved. All Xilinx trademarks, registered trademarks, patents, and disclaimers are as listed at http://www.xilinx.com/legal.htm. All other trademarks and registered trademarks are the property of their respective owners. All specifications are subject to change without notice.

Product Obsolete/Under Obsolescence
XCV200-4FG256C Xilinx Inc. IC FPGA 176 I/O 256FBGA

Virtex Pinout Information

Pinout Tables

See www.xilinx.com for updates or additional pinout information. For convenience, Table 2, Table 3 and Table 4 list the locations of special-purpose and power-supply pins. Pins not listed are either user I/Os or not connected, depending on the device/package combination. See the Pinout Diagrams starting on page 17 for any pins not listed for a particular part/package combination.

Table 2: **Virtex Pinout Tables (Chip-Scale and QFP Packages)**

Pin Name	Device	CS144	TQ144	PQ/HQ240
GCK0	All	K7	90	92
GCK1	All	M7	93	89
GCK2	All	A7	19	210
GCK3	All	A6	16	213
M0	All	M1	110	60
M1	All	L2	112	58
M2	All	N2	108	62
CCLK	All	B13	38	179
PROGRAM	All	L12	72	122
DONE	All	M12	74	120
INIT	All	L13	71	123
BUSY/DOUT	All	C11	39	178
D0/DIN	All	C12	40	177
D1	All	E10	45	167
D2	All	E12	47	163
D3	All	F11	51	156
D4	All	H12	59	145
D5	All	J13	63	138
D6	All	J11	65	134
D7	All	K10	70	124
WRITE	All	C10	32	185
CS	All	D10	33	184
TDI	All	A11	34	183
TDO	All	A12	36	181
TMS	All	B1	143	2
TCK	All	C3	2	239
V_{CCINT}	All	A9, B6, C5, G3, G12, M5, M9, N6	10, 15, 25, 57, 84, 94, 99, 126	16, 32, 43, 77, 88, 104, 137, 148, 164, 198, 214, 225

Product Obsolete/Under Obsolescence
XCV200-4FG256C Xilinx Inc. IC FPGA 176 I/O 256FBGA

Table 2: **Virtex Pinout Tables (Chip-Scale and QFP Packages)** ***(Continued)***

Pin Name	Device	CS144	TQ144	PQ/HQ240
V_{CCO}	All	Banks 0 and 1: A2, A13, D7 Banks 2 and 3: B12, G11, M13 Banks 4 and 5: N1, N7, N13 Banks 6 and 7: B2, G2, M2	No I/O Banks in this package: 1, 17, 37, 55, 73, 92, 109, 128	No I/O Banks in this package: 15, 30, 44, 61, 76, 90, 105, 121, 136, 150, 165, 180, 197, 212, 226, 240
V_{REF}, Bank 0 (V_{REF} pins are listed incrementally. Connect all pins listed for both the required device and all smaller devices listed in the same package.) Within each bank, if input reference voltage is not required, all V_{REF} pins are general I/O.	XCV50	C4, D6	5, 13	218, 232
	XCV100/150	... + B4	... + 7	... + 229
	XCV200/300	N/A	N/A	... + 236
	XCV400	N/A	N/A	... + 215
	XCV600	N/A	N/A	... + 230
	XCV800	N/A	N/A	... + 222
V_{REF}, Bank 1 (V_{REF} pins are listed incrementally. Connect all pins listed for both the required device and all smaller devices listed in the same package.) Within each bank, if input reference voltage is not required, all V_{REF} pins are general I/O.	XCV50	A10, B8	22, 30	191, 205
	XCV100/150	... + D9	... + 28	... + 194
	XCV200/300	N/A	N/A	... + 187
	XCV400	N/A	N/A	... + 208
	XCV600	N/A	N/A	... + 193
	XCV800	N/A	N/A	... + 201
V_{REF}, Bank 2 (V_{REF} pins are listed incrementally. Connect all pins listed for both the required device and all smaller devices listed in the same package.) Within each bank, if input reference voltage is not required, all V_{REF} pins are general I/O.	XCV50	D11, F10	42, 50	157, 171
	XCV100/150	... + D13	... + 44	... + 168
	XCV200/300	N/A	N/A	... + 175
	XCV400	N/A	N/A	... + 154
	XCV600	N/A	N/A	... + 169
	XCV800	N/A	N/A	... + 161

Product Obsolete/Under Obsolescence
XCV200-4FG256C Xilinx Inc. IC FPGA 176 I/O 256FBGA

Table 2: **Virtex Pinout Tables (Chip-Scale and QFP Packages) *(Continued)***

Pin Name	Device	CS144	TQ144	PQ/HQ240
V_{REF}, Bank 3 (V_{REF} pins are listed incrementally. Connect all pins listed for both the required device and all smaller devices listed in the same package.) Within each bank, if input reference voltage is not required, all V_{REF} pins are general I/O.	XCV50	H11, K12	60, 68	130, 144
	XCV100/150	... + J10	... + 66	... + 133
	XCV200/300	N/A	N/A	... + 126
	XCV400	N/A	N/A	... + 147
	XCV600	N/A	N/A	... + 132
	XCV800	N/A	N/A	... + 140
V_{REF}, Bank 4 (V_{REF} pins are listed incrementally. Connect all pins listed for both the required device and all smaller devices listed in the same package.) Within each bank, if input reference voltage is not required, all V_{REF} pins are general I/O.	XCV50	L8, L10	79, 87	97, 111
	XCV100/150	... + N10	... + 81	... + 108
	XCV200/300	N/A	N/A	... + 115
	XCV400	N/A	N/A	... + 94
	XCV600	N/A	N/A	... + 109
	XCV800	N/A	N/A	... + 101
V_{REF}, Bank 5 (V_{REF} pins are listed incrementally. Connect all pins listed for both the required device and all smaller devices listed in the same package.) Within each bank, if input reference voltage is not required, all V_{REF} pins are general I/O.	XCV50	L4, L6	96, 104	70, 84
	XCV100/150	... + N4	... + 102	... + 73
	XCV200/300	N/A	N/A	... + 66
	XCV400	N/A	N/A	... + 87
	XCV600	N/A	N/A	... + 72
	XCV800	N/A	N/A	... + 80

Product Obsolete/Under Obsolescence
XCV200-4FG256C Xilinx Inc. IC FPGA 176 I/O 256FBGA

Table 2: **Virtex Pinout Tables (Chip-Scale and QFP Packages)** ***(Continued)***

Pin Name	Device	CS144	TQ144	PQ/HQ240
V_{REF}, Bank 6 (V_{REF} pins are listed incrementally. Connect all pins listed for both the required device and all smaller devices listed in the same package.) Within each bank, if input reference voltage is not required, all V_{REF} pins are general I/O.	XCV50	H2, K1	116, 123	36, 50
	XCV100/150	... + J3	... + 118	... + 47
	XCV200/300	N/A	N/A	... + 54
	XCV400	N/A	N/A	... + 33
	XCV600	N/A	N/A	... + 48
	XCV800	N/A	N/A	... + 40
V_{REF}, Bank 7 (V_{REF} pins are listed incrementally. Connect all pins listed for both the required device and all smaller devices listed in the same package.) Within each bank, if input reference voltage is not required, all V_{REF} pins are general I/O.	XCV50	D4, E1	133, 140	9, 23
	XCV100/150	... + D2	... + 138	... + 12
	XCV200/300	N/A	N/A	... + 5
	XCV400	N/A	N/A	... + 26
	XCV600	N/A	N/A	... + 11
	XCV800	N/A	N/A	... + 19
GND	All	A1, B9, B11, C7, D5, E4, E11, F1, G10, J1, J12, L3, L5, L7, L9, N12	9, 18, 26, 35, 46, 54, 64, 75, 83, 91, 100, 111, 120, 129, 136, 144,	1, 8, 14, 22, 29, 37, 45, 51, 59, 69, 75, 83, 91, 98, 106, 112, 119, 129, 135, 143, 151, 158, 166, 172, 182, 190, 196, 204, 211, 219, 227, 233

Product Obsolete/Under Obsolescence
XCV200-4FG256C Xilinx Inc. IC FPGA 176 I/O 256FBGA

Table 3: **Virtex Pinout Tables (BGA)**

Pin Name	Device	BG256	BG352	BG432	BG560
GCK0	All	Y11	AE13	AL16	AL17
GCK1	All	Y10	AF14	AK16	AJ17
GCK2	All	A10	B14	A16	D17
GCK3	All	B10	D14	D17	A17
M0	All	Y1	AD24	AH28	AJ29
M1	All	U3	AB23	AH29	AK30
M2	All	W2	AC23	AJ28	AN32
CCLK	All	B19	C3	D4	C4
PROGRAM	All	Y20	AC4	AH3	AM1
DONE	All	W19	AD3	AH4	AJ5
INIT	All	U18	AD2	AJ2	AH5
BUSY/DOUT	All	D18	E4	D3	D4
D0/DIN	All	C19	D3	C2	E4
D1	All	E20	G1	K4	K3
D2	All	G19	J3	K2	L4
D3	All	J19	M3	P4	P3
D4	All	M19	R3	V4	W4
D5	All	P19	U4	AB1	AB5
D6	All	T20	V3	AB3	AC4
D7	All	V19	AC3	AG4	AJ4
WRITE	All	A19	D5	B4	D6
CS	All	B18	C4	D5	A2
TDI	All	C17	B3	B3	D5
TDO	All	A20	D4	C4	E6
TMS	All	D3	D23	D29	B33
TCK	All	A1	C24	D28	E29
DXN	All	W3	AD23	AH27	AK29
DXP	All	V4	AE24	AK29	AJ28

Product Obsolete/Under Obsolescence
XCV200-4FG256C Xilinx Inc. IC FPGA 176 I/O 256FBGA

Table 3: **Virtex Pinout Tables (BGA) *(Continued)***

Pin Name	Device	BG256	BG352	BG432	BG560
V_{CCINT} **Notes:** • Superset includes all pins, including the ones in **bold** type. Subset excludes pins in **bold** type. • In BG352, for XCV300 all the V_{CCINT} pins in the superset must be connected. For XCV150/200, V_{CCINT} pins in the subset must be connected, and pins in **bold** type can be left unconnected (these unconnected pins cannot be used as user I/O.) • In BG432, for XCV400/600/800 all V_{CCINT} pins in the superset must be connected. For XCV300, V_{CCINT} pins in the subset must be connected, and pins in **bold** type can be left unconnected (these unconnected pins cannot be used as user I/O.) • In BG560, for XCV800/1000 all V_{CCINT} pins in the superset must be connected. For XCV400/600, V_{CCINT} pins in the subset must be connected, and pins in **bold** type can be left unconnected (these unconnected pins cannot be used as user I/O.)	XCV50/100	C10, D6, D15, F4, F17, L3, L18, R4, R17, U6, U15, V10	N/A	N/A	N/A
	XCV150/200/300	Same as above	A20, C14, D10, J24, K4, P2, P25, V24, W2, AC10, AE14, AE19, **B16, D12, L1, L25, R23, T1, AF11, AF16**	A10, A17, B23, C14, C19, K3, K29, N2, N29, T1, T29, W2, W31, AB2, AB30, AJ10, AJ16, AK13, AK19, AK22, **B26, C7, F1, F30, AE29, AF1, AH8, AH24**	N/A
	XCV400/600/800/1000	N/A	N/A	Same as above	A21, B14, B18, B28, C24, E9, E12, F2, H30, J1, K32, N1, N33, U5, U30, Y2, Y31, AD2, AD32, AG3, AG31, AK8, AK11, AK17, AK20, AL14, AL27, AN25, **B12, C22, M3, N29, AB2, AB32, AJ13, AL22**
V_{CCO}, Bank 0	All	D7, D8	A17, B25, D19	A21, C29, D21	A22, A26, A30, B19, B32
V_{CCO}, Bank 1	All	D13, D14	A10, D7, D13	A1, A11, D11	A10, A16, B13, C3, E5
V_{CCO}, Bank 2	All	G17, H17	B2, H4, K1	C3, L1, L4	B2, D1, H1, M1, R2
V_{CCO}, Bank 3	All	N17, P17	P4, U1, Y4	AA1, AA4, AJ3	V1, AA2, AD1, AK1, AL2
V_{CCO}, Bank 4	All	U13, U14	AC8, AE2, AF10	AH11, AL1, AL11	AM2, AM15, AN4, AN8, AN12
V_{CCO}, Bank 5	All	U7, U8	AC14, AC20, AF17	AH21, AJ29, AL21	AL31, AM21, AN18, AN24, AN30
V_{CCO}, Bank 6	All	N4, P4	U26, W23, AE25	AA28, AA31, AL31	W32, AB33, AF33, AK33, AM32

Product Obsolete/Under Obsolescence
XCV200-4FG256C Xilinx Inc. IC FPGA 176 I/O 256FBGA

Table 3: **Virtex Pinout Tables (BGA) *(Continued)***

Pin Name	Device	BG256	BG352	BG432	BG560
V_{CCO}, Bank 7	All	G4, H4	G23, K26, N23	A31, L28, L31	C32, D33, K33, N32, T33
V_{REF}, Bank 0 (VREF pins are listed incrementally. Connect all pins listed for both the required device and all smaller devices listed in the same package.) Within each bank, if input reference voltage is not required, all V_{REF} pins are general I/O.	XCV50	A8, B4	N/A	N/A	N/A
	XCV100/150	... + A4	A16,C19, C21	N/A	N/A
	XCV200/300	... + A2	... + D21	B19, D22, D24, D26	N/A
	XCV400	N/A	N/A	... + C18	A19, D20, D26, E23, E27
	XCV600	N/A	N/A	... + C24	... + E24
	XCV800	N/A	N/A	... + B21	... + E21
	XCV1000	N/A	N/A	N/A	... + D29
V_{REF}, Bank 1 (VREF pins are listed incrementally. Connect all pins listed for both the required device and all smaller devices listed in the same package.) Within each bank, if input reference voltage is not required, all V_{REF} pins are general I/O.	XCV50	A17, B12	N/A	N/A	N/A
	XCV100/150	... + B15	B6, C9, C12	N/A	N/A
	XCV200/300	... + B17	... + D6	A13, B7, C6, C10	N/A
	XCV400	N/A	N/A	... + B15	A6, D7, D11, D16, E15
	XCV600	N/A	N/A	... + D10	... + D10
	XCV800	N/A	N/A	... + B12	... + D13
	XCV1000	N/A	N/A	N/A	... + E7
V_{REF}, Bank 2 (V_{REF} pins are listed incrementally. Connect all pins listed for both the required device and all smaller devices listed in the same package.) Within each bank, if input reference voltage is not required, all V_{REF} pins are general I/O.	XCV50	C20, J18	N/A	N/A	N/A
	XCV100/150	... + F19	E2, H2, M4	N/A	N/A
	XCV200/300	... + G18	... + D2	E2, G3, J2, N1	N/A
	XCV400	N/A	N/A	... + R3	G5, H4, L5, P4, R1
	XCV600	N/A	N/A	... + H1	... + K5
	XCV800	N/A	N/A	... + M3	... + N5
	XCV1000	N/A	N/A	N/A	... + B3

Product Obsolete/Under Obsolescence
XCV200-4FG256C Xilinx Inc. IC FPGA 176 I/O 256FBGA

Table 3: **Virtex Pinout Tables (BGA) *(Continued)***

Pin Name	Device	BG256	BG352	BG432	BG560
V_{REF}, Bank 3 (V_{REF} pins are listed incrementally. Connect all pins listed for both the required device and all smaller devices listed in the same package.) Within each bank, if input reference voltage is not required, all V_{REF} pins are general I/O.	XCV50	M18, V20	N/A	N/A	N/A
	XCV100/150	... + R19	R4, V4, Y3	N/A	N/A
	XCV200/300	... + P18	... + AC2	V2, AB4, AD4, AF3	N/A
	XCV400	N/A	N/A	... + U2	V4, W5, AD3, AE5, AK2
	XCV600	N/A	N/A	... + AC3	... + AF1
	XCV800	N/A	N/A	... + Y3	... + AA4
	XCV1000	N/A	N/A	N/A	... + AH4
V_{REF}, Bank 4 (V_{REF} pins are listed incrementally. Connect all pins listed for both the required device and all smaller devices listed in the same package.) Within each bank, if input reference voltage is not required, all V_{REF} pins are general I/O.	XCV50	V12, Y18	N/A	N/A	N/A
	XCV100/150	... + W15	AC12, AE5, AE8,	N/A	N/A
	XCV200/300	... + V14	... + AE4	AJ7, AL4, AL8, AL13	N/A
	XCV400	N/A	N/A	... + AK15	AL7, AL10, AL16, AM4, AM14
	XCV600	N/A	N/A	... + AK8	... + AL9
	XCV800	N/A	N/A	... + AJ12	... + AK13
	XCV1000	N/A	N/A	N/A	... + AN3
V_{REF}, Bank 5 (V_{REF} pins are listed incrementally. Connect all pins listed for both the required device and all smaller devices listed in the same package.) Within each bank, if input reference voltage is not required, all V_{REF} pins are general I/O.	XCV50	V9, Y3	N/A	N/A	N/A
	XCV100/150	... + W6	AC15, AC18, AD20	N/A	N/A
	XCV200/300	... + V7	... + AE23	AJ18, AJ25, AK23, AK27	N/A
	XCV400	N/A	N/A	... + AJ17	AJ18, AJ25, AL20, AL24, AL29
	XCV600	N/A	N/A	... + AL24	... + AM26
	XCV800	N/A	N/A	... + AH19	... + AN23
	XCV1000	N/A	N/A	N/A	... + AK28
V_{REF}, Bank 6 (V_{REF} pins are listed incrementally. Connect all pins listed for both the required device and all smaller devices listed in the same package.) Within each bank, if input reference voltage is not required, all V_{REF} pins are general I/O.	XCV50	M2, R3	N/A	N/A	N/A
	XCV100/150	... + T1	R24, Y26, AA25,	N/A	N/A
	XCV200/300	... + T3	... + AD26	V28, AB28, AE30, AF28	N/A
	XCV400	N/A	N/A	... + U28	V29, Y32, AD31, AE29, AK32
	XCV600	N/A	N/A	... + AC28	... + AE31
	XCV800	N/A	N/A	... + Y30	... + AA30
	XCV1000	N/A	N/A	N/A	... + AH30

Product Obsolete/Under Obsolescence
XCV200-4FG256C Xilinx Inc. IC FPGA 176 I/O 256FBGA

Table 3: **Virtex Pinout Tables (BGA) *(Continued)***

Pin Name	Device	BG256	BG352	BG432	BG560
V_{REF}, Bank 7 (V_{REF} pins are listed incrementally. Connect all pins listed for both the required device and all smaller devices listed in the same package.) Within each bank, if input reference voltage is not required, all V_{REF} pins are general I/O.	XCV50	G3, H1	N/A	N/A	N/A
	XCV100/150	... + D1	D26, G26, L26	N/A	N/A
	XCV200/300	... + B2	... + E24	F28, F31, J30, N30	N/A
	XCV400	N/A	N/A	... + R31	E31, G31, K31, P31, T31
	XCV600	N/A	N/A	... + J28	... + H32
	XCV800	N/A	N/A	... + M28	... + L33
	XCV1000	N/A	N/A	N/A	... + D31
GND	All	C3, C18, D4, D5, D9, D10, D11, D12, D16, D17, E4, E17, J4, J17, K4, K17, L4, L17, M4, M17, T4, T17, U4, U5, U9, U10, U11, U12, U16, U17, V3, V18	A1, A2, A5, A8, A14, A19, A22, A25, A26, B1, B26, E1, E26, H1, H26, N1, P26, W1, W26, AB1, AB26, AE1, AE26, AF1, AF2, AF5, AF8, AF13, AF19, AF22, AF25, AF26	A2, A3, A7, A9, A14, A18, A23, A25, A29, A30, B1, B2, B30, B31, C1, C31, D16, G1, G31, J1, J31, P1, P31, T4, T28, V1, V31, AC1, AC31, AE1, AE31, AH16, AJ1, AJ31, AK1, AK2, AK30, AK31, AL2, AL3, AL7, AL9 AL14, AL18 AL23, AL25, AL29, AL30	A1, A7, A12, A14, A18, A20, A24, A29, A32, A33, B1, B6, B9, B15, B23, B27, B31, C2, E1, F32, G2, G33, J32, K1, L2, M33, P1, P33, R32, T1, V33, W2, Y1, Y33, AB1, AC32, AD33, AE2, AG1, AG32, AH2, AJ33, AL32, AM3, AM7, AM11, AM19, AM25, AM28, AM33, AN1, AN2, AN5, AN10, AN14, AN16, AN20, AN22, AN27, AN33
GND(1)	All	J9, J10, J11, J12, K9, K10, K11, K12, L9, L10, L11, L12, M9, M10, M11, M12	N/A	N/A	N/A
No Connect	All	N/A	N/A	N/A	C31, AC2, AK4, AL3

Notes:
1. 16 extra balls (grounded) at package center.

Product Obsolete/Under Obsolescence
XCV200-4FG256C Xilinx Inc. IC FPGA 176 I/O 256FBGA

Table 4: **Virtex Pinout Tables (Fine-Pitch BGA)**

Pin Name	Device	FG256	FG456	FG676	FG680
GCK0	All	N8	W12	AA14	AW19
GCK1	All	R8	Y11	AB13	AU22
GCK2	All	C9	A11	C13	D21
GCK3	All	B8	C11	E13	A20
M0	All	N3	AB2	AD4	AT37
M1	All	P2	U5	W7	AU38
M2	All	R3	Y4	AB6	AT35
CCLK	All	D15	B22	D24	E4
PROGRAM	All	P15	W20	AA22	AT5
DONE	All	R14	Y19	AB21	AU5
INIT	All	N15	V19	Y21	AU2
BUSY/DOUT	All	C15	C21	E23	E3
D0/DIN	All	D14	D20	F22	C2
D1	All	E16	H22	K24	P4
D2	All	F15	H20	K22	P3
D3	All	G16	K20	M22	R1
D4	All	J16	N22	R24	AD3
D5	All	M16	R21	U23	AG2
D6	All	N16	T22	V24	AH1
D7	All	N14	Y21	AB23	AR4
WRITE	All	C13	A20	C22	B4
CS	All	B13	C19	E21	D5
TDI	All	A15	B20	D22	B3
TDO	All	B14	A21	C23	C4
TMS	All	D3	D3	F5	E36
TCK	All	C4	C4	E6	C36
DXN	All	R4	Y5	AB7	AV37
DXP	All	P4	V6	Y8	AU35

Product Obsolete/Under Obsolescence
XCV200-4FG256C Xilinx Inc. IC FPGA 176 I/O 256FBGA

Table 4: **Virtex Pinout Tables (Fine-Pitch BGA) *(Continued)***

Pin Name	Device	FG256	FG456	FG676	FG680
V_{CCINT}	All	C3, C14, D4, D13, E5, E12, M5, M12, N4, N13, P3, P14	E5, E18, F6, F17, G7, G8, G9, G14, G15, G16, H7, H16, J7, J16, P7, P16, R7, R16, T7, T8, T9, T14, T15, T16, U6, U17, V5, V18	G7, G20, H8, H19, J9, J10, J11, J16, J17, J18, K9, K18, L9, L18, T9, T18, U9, U18, V9, V10, V11, V16, V17, V18, W8, W19, Y7, Y20	AD5, AD35, AE5, AE35, AL5, AL35, AM5, AM35, AR8, AR9, AR15, AR16, AR24, AR25, AR31, AR32, E8, E9, E15, E16, E24, E25, E31, E32, H5, H35, J5, J35, R5, R35, T5, T35
V_{CCO}, Bank 0	All	E8, F8	F7, F8, F9, F10 G10, G11	H9, H10, H11, H12, J12, J13	E26, E27, E29, E30, E33, E34
V_{CCO}, Bank 1	All	E9, F9	F13, F14, F15, F16, G12, G13	H15, H16, H17, H18, J14, J15	E6, E7, E10, E11, E13, E14
V_{CCO}, Bank 2	All	H11, H12	G17, H17, J17, K16, K17, L16	J19, K19, L19, M18, M19, N18	F5, G5, K5, L5, N5, P5
V_{CCO}, Bank 3	All	J11, J12	M16, N16, N17, P17, R17, T17	P18, R18, R19, T19, U19, V19	AF5, AG5, AN5, AK5, AJ5, AP5
V_{CCO}, Bank 4	All	L9. M9	T12, T13, U13, U14, U15, U16,	V14, V15, W15, W16, W17, W18	AR6, AR7, AR10, AR11, AR13, AR14
V_{CCO}, Bank 5	All	L8, M8	T10, T11, U7, U8, U9, U10	V12, V13, W9,W10, W11, W12	AR26, AR27, AR29, AR30, AR33, AR34
V_{CCO}, Bank 6	All	J5, J6	M7, N6, N7, P6, R6, T6	P9, R8, R9, T8, U8, V8	AF35, AG35, AJ35, AK35, AN35, AP35
V_{CCO}, Bank 7	All	H5, H6	G6, H6, J6, K6, K7, L7	J8, K8, L8, M8, M9, N9	F35, G35, K35, L35, N35, P35
V_{REF}, Bank 0 (VREF pins are listed incrementally. Connect all pins listed for both the required device and all smaller devices listed in the same package.) Within each bank, if input reference voltage is not required, all V_{REF} pins are general I/O.	XCV50	B4, B7	N/A	N/A	N/A
	XCV100/150	... + C6	A9, C6, E8	N/A	N/A
	XCV200/300	... + A3	... + B4	N/A	N/A
	XCV400	N/A	N/A	A12, C11, D6, E8, G10	
	XCV600	N/A	N/A	... + B7	A33, B28, B30, C23, C24, D33
	XCV800	N/A	N/A	... + B10	... + A26
	XCV1000	N/A	N/A	N/A	... + D34

Product Obsolete/Under Obsolescence
XCV200-4FG256C Xilinx Inc. IC FPGA 176 I/O 256FBGA

Table 4: **Virtex Pinout Tables (Fine-Pitch BGA) *(Continued)***

Pin Name	Device	FG256	FG456	FG676	FG680
V_{REF}, Bank 1 (VREF pins are listed incrementally. Connect all pins listed for both the required device and all smaller devices listed in the same package.) Within each bank, if input reference voltage is not required, all V_{REF} pins are general I/O.	XCV50	B9, C11	N/A	N/A	N/A
	XCV100/150	... + E11	A18, B13, E14	N/A	N/A
	XCV200/300	... + A14	... + A19	N/A	N/A
	XCV400	N/A	N/A	A14, C20, C21, D15, G16	N/A
	XCV600	N/A	N/A	... + B19	B6, B8, B18, D11, D13, D17
	XCV800	N/A	N/A	... + A17	... + B14
	XCV1000	N/A	N/A	N/A	... + B5
V_{REF}, Bank 2 (V_{REF} pins are listed incrementally. Connect all pins listed for both the required device and all smaller devices listed in the same package.) Within each bank, if input reference voltage is not required, all V_{REF} pins are general I/O.	XCV50	F13, H13	N/A	N/A	N/A
	XCV100/150	... + F14	F21, H18, K21	N/A	N/A
	XCV200/300	... + E13	... + D22	N/A	N/A
	XCV400	N/A	N/A	F24, H23, K20, M23, M26	N/A
	XCV600	N/A	N/A	... + G26	G1, H4, J1, L2, V5, W3
	XCV800	N/A	N/A	... + K25	... + N1
	XCV1000	N/A	N/A	N/A	... + D2
V_{REF}, Bank 3 (V_{REF} pins are listed incrementally. Connect all pins listed for both the required device and all smaller devices listed in the same package.) Within each bank, if input reference voltage is not required, all V_{REF} pins are general I/O.	XCV50	K16, L14	N/A	N/A	N/A
	XCV100/150	... + L13	N21, R19, U21	N/A	N/A
	XCV200/300	... + M13	... + U20	N/A	N/A
	XCV400	N/A	N/A	R23, R25, U21, W22, W23	N/A
	XCV600	N/A	N/A	... + W26	AC1, AJ2, AK3, AL4, AR1, Y1
	XCV800	N/A	N/A	... + U25	... + AF3
	XCV1000	N/A	N/A	N/A	... + AP4

Product Obsolete/Under Obsolescence
XCV200-4FG256C Xilinx Inc. IC FPGA 176 I/O 256FBGA

Table 4: **Virtex Pinout Tables (Fine-Pitch BGA) *(Continued)***

Pin Name	Device	FG256	FG456	FG676	FG680
V_{REF}, Bank 4 (V_{REF} pins are listed incrementally. Connect all pins listed for both the required device and all smaller devices listed in the same package.) Within each bank, if input reference voltage is not required, all V_{REF} pins are general I/O.	XCV50	P9, T12	N/A	N/A	N/A
	XCV100/150	... + T11	AA13, AB16, AB19	N/A	N/A
	XCV200/300	... + R13	... + AB20	N/A	N/A
	XCV400	N/A	N/A	AC15, AD18, AD21, AD22, AF15	N/A
	XCV600	N/A	N/A	... + AF20	AT19, AU7, AU17, AV8, AV10, AW11
	XCV800	N/A	N/A	... + AF17	... + AV14
	XCV1000	N/A	N/A	N/A	... + AU6
V_{REF}, Bank 5 (V_{REF} pins are listed incrementally. Connect all pins listed for both the required device and all smaller devices listed in the same package.) Within each bank, if input reference voltage is not required, all V_{REF} pins are general I/O.	XCV50	T4, P8	N/A	N/A	N/A
	XCV100/150	... + R5	W8, Y10, AA5	N/A	N/A
	XCV200/300	... + T2	... + Y6	N/A	N/A
	XCV400	N/A	N/A	AA10, AB8, AB12, AC7, AF12	N/A
	XCV600	N/A	N/A	... + AF8	AT27, AU29, AU31, AV35, AW21, AW23
	XCV800	N/A	N/A	... + AE10	... + AT25
	XCV1000	N/A	N/A	N/A	... + AV36
V_{REF}, Bank 6 (V_{REF} pins are listed incrementally. Connect all pins listed for both the required device and all smaller devices listed in the same package.) Within each bank, if input reference voltage is not required, all V_{REF} pins are general I/O.	XCV50	J3, N1	N/A	N/A	N/A
	XCV100/150	... + M1	N2, R4, T3	N/A	N/A
	XCV200/300	... + N2	... + Y1	N/A	N/A
	XCV400	N/A	N/A	AB3, R1, R4, U6, V5	N/A
	XCV600	N/A	N/A	... + Y1	AB35, AD37, AH39, AK39, AM39, AN36
	XCV800	N/A	N/A	... + U2	... + AE39
	XCV1000	N/A	N/A	N/A	... + AT39

Product Obsolete/Under Obsolescence
XCV200-4FG256C Xilinx Inc. IC FPGA 176 I/O 256FBGA

Table 4: **Virtex Pinout Tables (Fine-Pitch BGA) *(Continued)***

Pin Name	Device	FG256	FG456	FG676	FG680
V_{REF}, Bank 7 (V_{REF} pins are listed incrementally. Connect all pins listed for both the required device and all smaller devices listed in the same package.) Within each bank, if input reference voltage is not required, all V_{REF} pins are general I/O.	XCV50	C1, H3	N/A	N/A	N/A
	XCV100/150	... + D1	E2, H4, K3	N/A	N/A
	XCV200/300	... + B1	... + D2	N/A	N/A
	XCV400	N/A	N/A	F4, G4, K6, M2, M5	N/A
	XCV600	N/A	N/A	... + H1	E38, G38, L36, N36, U36, U38
	XCV800	N/A	N/A	... + K1	... + N38
	XCV1000	N/A	N/A	N/A	... + F36
GND	All	A1, A16, B2, B15, F6, F7, F10, F11, G6, G7, G8, G9, G10, G11, H7, H8, H9, H10, J7, J8, J9, J10, K6, K7, K8, K9, K10, K11, L6, L7, L10, L11, R2, R15, T1, T16	A1, A22, B2, B21, C3, C20, J9, J10, J11, J12, J13, J14, K9, K10, K11, K12, K13, K14, L9, L10, L11, L12, L13, L14, M9, M10, M11, M12, M13, M14, N9, N10, N11, N12, N13, N14, P9, P10, P11, P12, P13, P14, Y3, Y20, AA2, AA21, AB1, AB22	A1, A26, B2, B9, B14, B18, B25, C3, C24, D4, D23, E5, E22, J2, J25, K10, K11, K12, K13, K14, K15, K16, K17, L10, L11, L12, L13, L14, L15, L16, L17, M10, M11, M12, M13, M14, M15, M16, M17, N2, N10, N11, N12, N13, N14, N15, N16, N17, P10, P11, P12, P13, P14, P15, P16, P17, P25, R10, R11, R12, R13, R14, R15, R16, R17, T10, T11, T12, T13, T14, T15, T16, T17, U10, U11, U12, U13, U14, U15, U16, U17, V2, V25, AB5, AB22, AC4, AC23, AD3, AD24, AE2, AE9, AE13, AE18, AE25, AF1, AF26	A1, A2, A3, A37, A38, A39, AA5, AA35, AH4, AH5, AH35, AH36, AR5, AR12, AR19, AR20, AR21, AR28, AR35, AT4, AT12, AT20, AT28, AT36, AU1, AU3, AU20, AU37, AU39, AV1, AV2, AV38, AV39, AW1, AW2, AW3, AW37, AW38, AW39, B1, B2, B38, B39, C1, C3, C20, C37, C39, D4, D12, D20, D28, D36, E5, E12, E19, E20, E21, E28, E35, M4, M5, M35, M36, W5, W35, Y3, Y4, Y5, Y35, Y36, Y37

Product Obsolete/Under Obsolescence
XCV200-4FG256C Xilinx Inc. IC FPGA 176 I/O 256FBGA

Table 4: **Virtex Pinout Tables (Fine-Pitch BGA) *(Continued)***

Pin Name	Device	FG256	FG456	FG676	FG680
No Connect (No-connect pins are listed incrementally. All pins listed for both the required device and all larger devices listed in the same package are no connects.)	XCV800	N/A	N/A	A2, A3, A15, A25, B1, B6, B11, B16, B21, B24, B26, C1, C2, C25, C26, F2, F6, F21, F25, L2, L25, N25, P2, T2, T25, AA2, AA6, AA21, AA25, AD1, AD2, AD25, AE1, AE3, AE6, AE11, AE14, AE16, AE21, AE24, AE26, AF2, AF24, AF25	N/A
	XCV600	N/A	N/A	same as above	N/A
	XCV400	N/A	N/A	... + A9, A10, A13, A16, A24, AC1, AC25, AE12, AE15, AF3, AF10, AF11, AF13, AF14, AF16, AF18, AF23, B4, B12, B13, B15, B17, D1, D25, H26, J1, K26, L1, M1, M25, N1, N26, P1, P26, R2, R26, T1, T26, U26, V1	N/A
	XCV300	N/A	D4, D19, W4, W19	N/A	N/A
	XCV200	N/A	... + A2, A6, A12, B11, B16, C2, D1, D18, E17, E19, G2, G22, L2, L19, M2, M21, R3, R20, U3, U18, Y22, AA1, AA3, AA11, AA16, AB7, AB12, AB21,	N/A	N/A
	XCV150	N/A	... + A13, A14, C8, C9, E13, F11, H21, J1, J4, K2, K18, K19, M17, N1, P1, P5, P22, R22, W13, W15, AA9, AA10, AB8, AB14	N/A	N/A

Product Obsolete/Under Obsolescence
XCV200-4FG256C Xilinx Inc. IC FPGA 176 I/O 256FBGA

Pinout Diagrams

The following diagrams, **CS144 Pin Function Diagram**, page 17 through **FG680 Pin Function Diagram**, page 27, illustrate the locations of special-purpose pins on Virtex FPGAs. Table 5 lists the symbols used in these diagrams. The diagrams also show I/O-bank boundaries.

Table 5: **Pinout Diagram Symbols**

Symbol	Pin Function
✳	General I/O
❄	Device-dependent general I/O, n/c on smaller devices
V	V_{CCINT}
v	Device-dependent V_{CCINT}, n/c on smaller devices
O	V_{CCO}
R	V_{REF}
r	Device-dependent V_{REF}, remains I/O on smaller devices
G	Ground
Ø, 1, 2, 3	Global Clocks

Table 5: **Pinout Diagram Symbols *(Continued)***

Symbol	Pin Function
⑩, ❶, ❷	M0, M1, M2
⑩, ①, ②, ③, ④, ⑤, ⑥, ⑦	D0/DIN, D1, D2, D3, D4, D5, D6, D7
B	DOUT/BUSY
D	DONE
P	$\overline{PROGRAM}$
I	$\overline{INIT}$
K	CCLK
W	$\overline{WRITE}$
S	$\overline{CS}$
T	Boundary-scan Test Access Port
+	Temperature diode, anode
–	Temperature diode, cathode
n	No connect

CS144 Pin Function Diagram

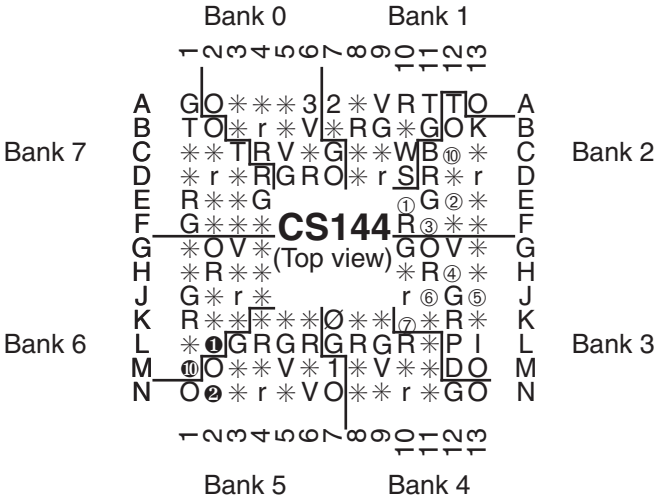

Figure 1: **CS144 Pin Function Diagram**

Product Obsolete/Under Obsolescence
XCV200-4FG256C Xilinx Inc. IC FPGA 176 I/O 256FBGA

TQ144 Pin Function Diagram

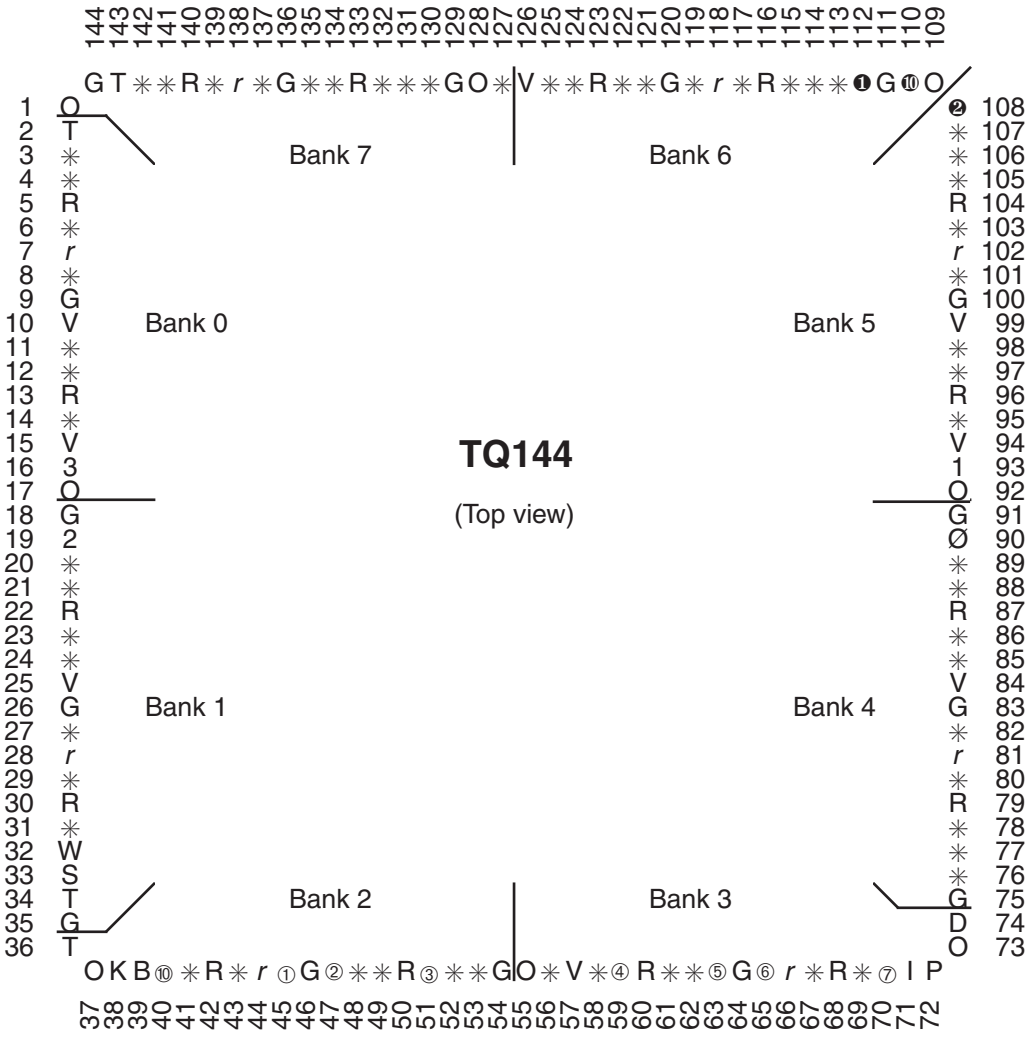

Figure 2: **TQ144 Pin Function Diagram**

Product Obsolete/Under Obsolescence
XCV200-4FG256C Xilinx Inc. IC FPGA 176 I/O 256FBGA

PQ240/HQ240 Pin Function Diagram

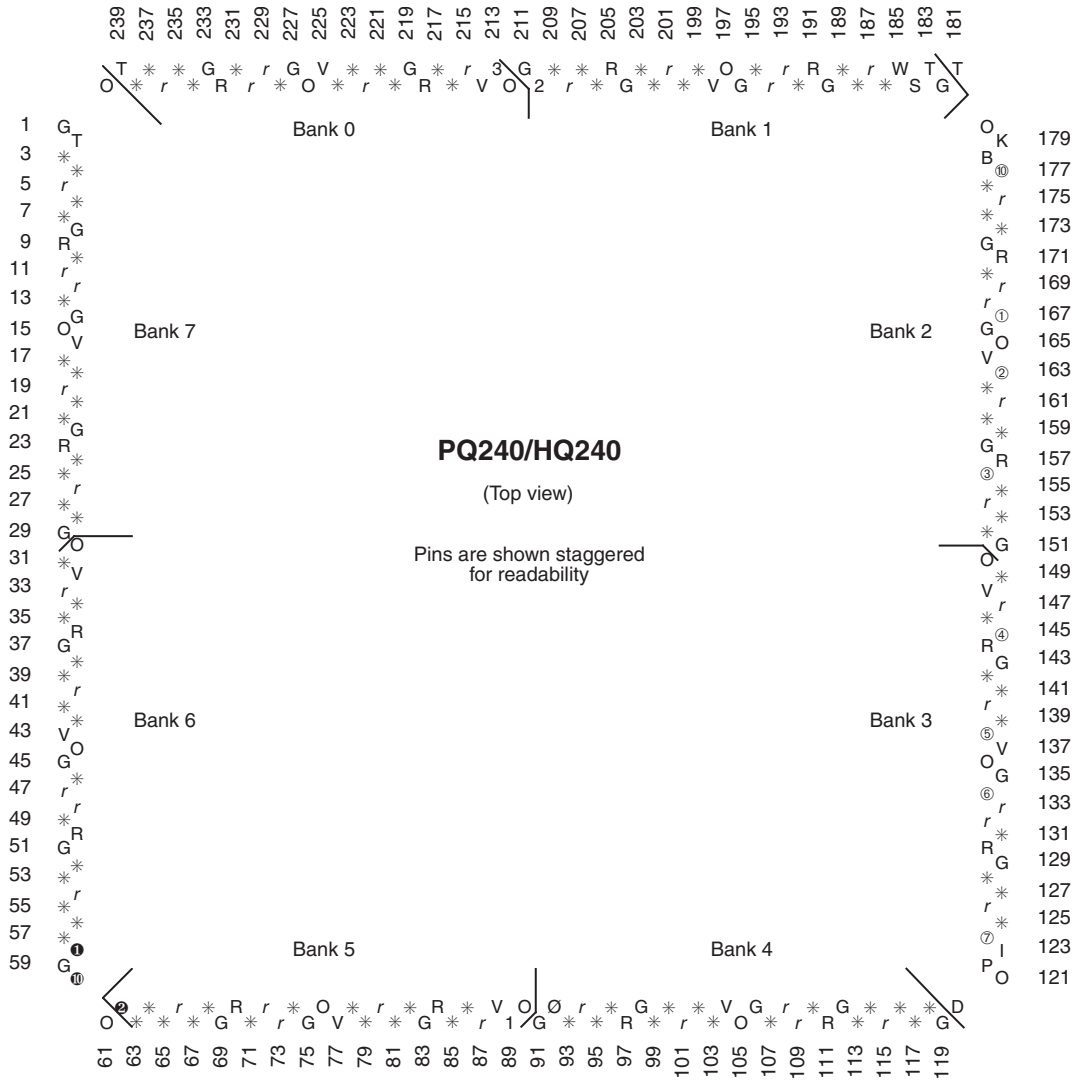

Figure 3: **PQ240/HQ240 Pin Function Diagram**

Product Obsolete/Under Obsolescence
XCV200-4FG256C Xilinx Inc. IC FPGA 176 I/O 256FBGA

BG256 Pin Function Diagram

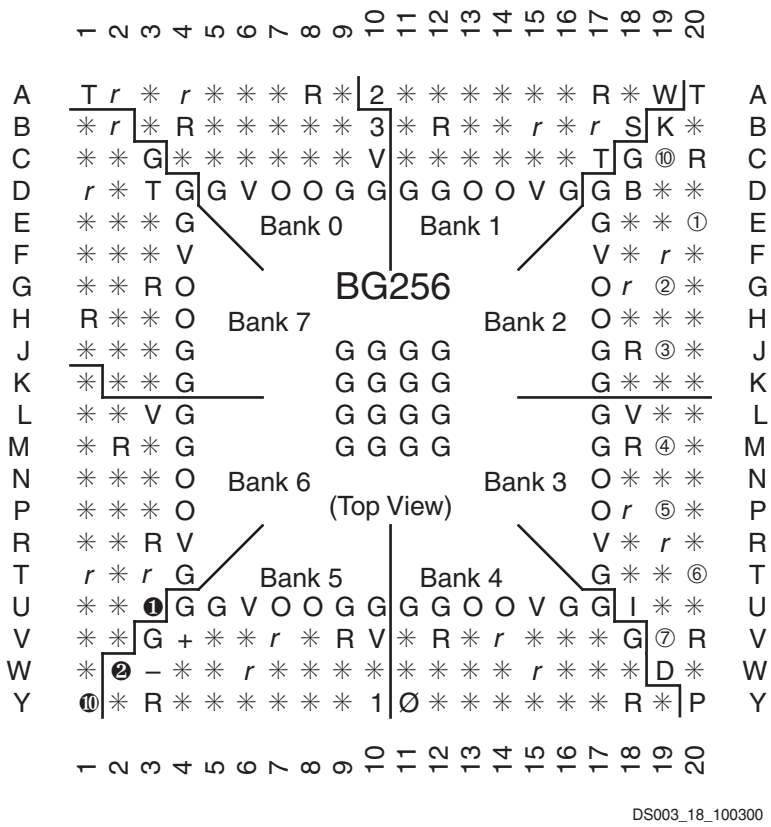

Figure 4: **BG256 Pin Function Diagram**

Product Obsolete/Under Obsolescence
XCV200-4FG256C Xilinx Inc. IC FPGA 176 I/O 256FBGA

BG352 Pin Function Diagram

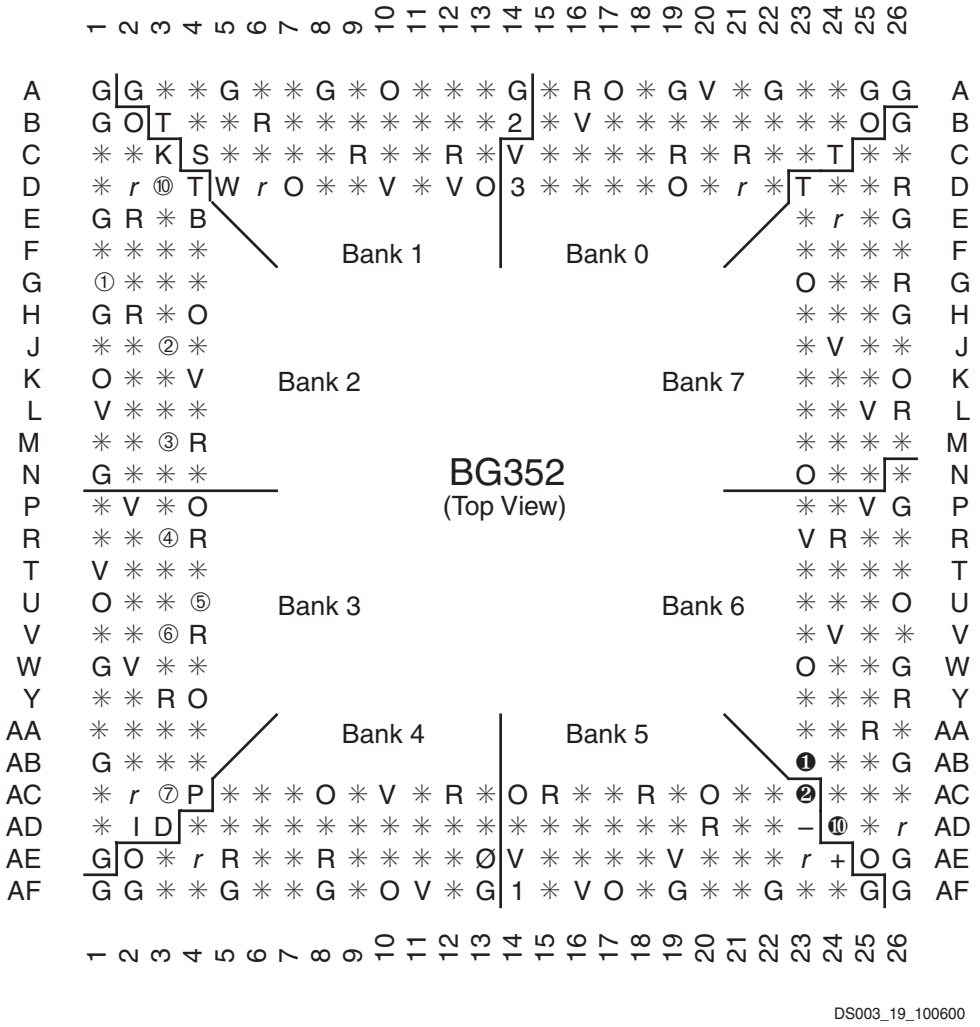

Figure 5: **BG352 Pin Function Diagram**

Product Obsolete/Under Obsolescence
XCV200-4FG256C Xilinx Inc. IC FPGA 176 I/O 256FBGA

BG432 Pin Function Diagram

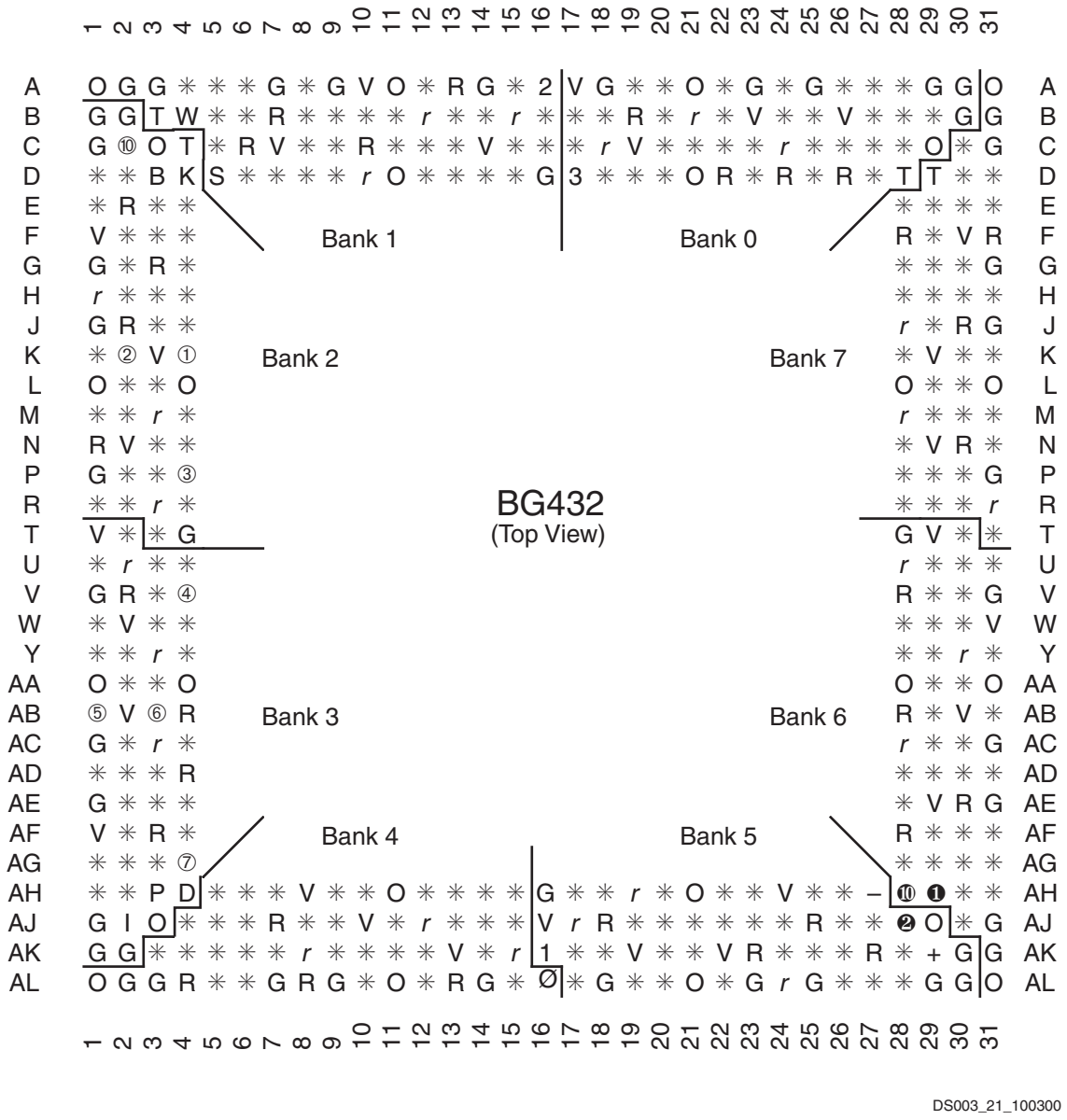

Figure 6: **BG432 Pin Function Diagram**

Product Obsolete/Under Obsolescence
XCV200-4FG256C Xilinx Inc. IC FPGA 176 I/O 256FBGA

BG560 Pin Function Diagram

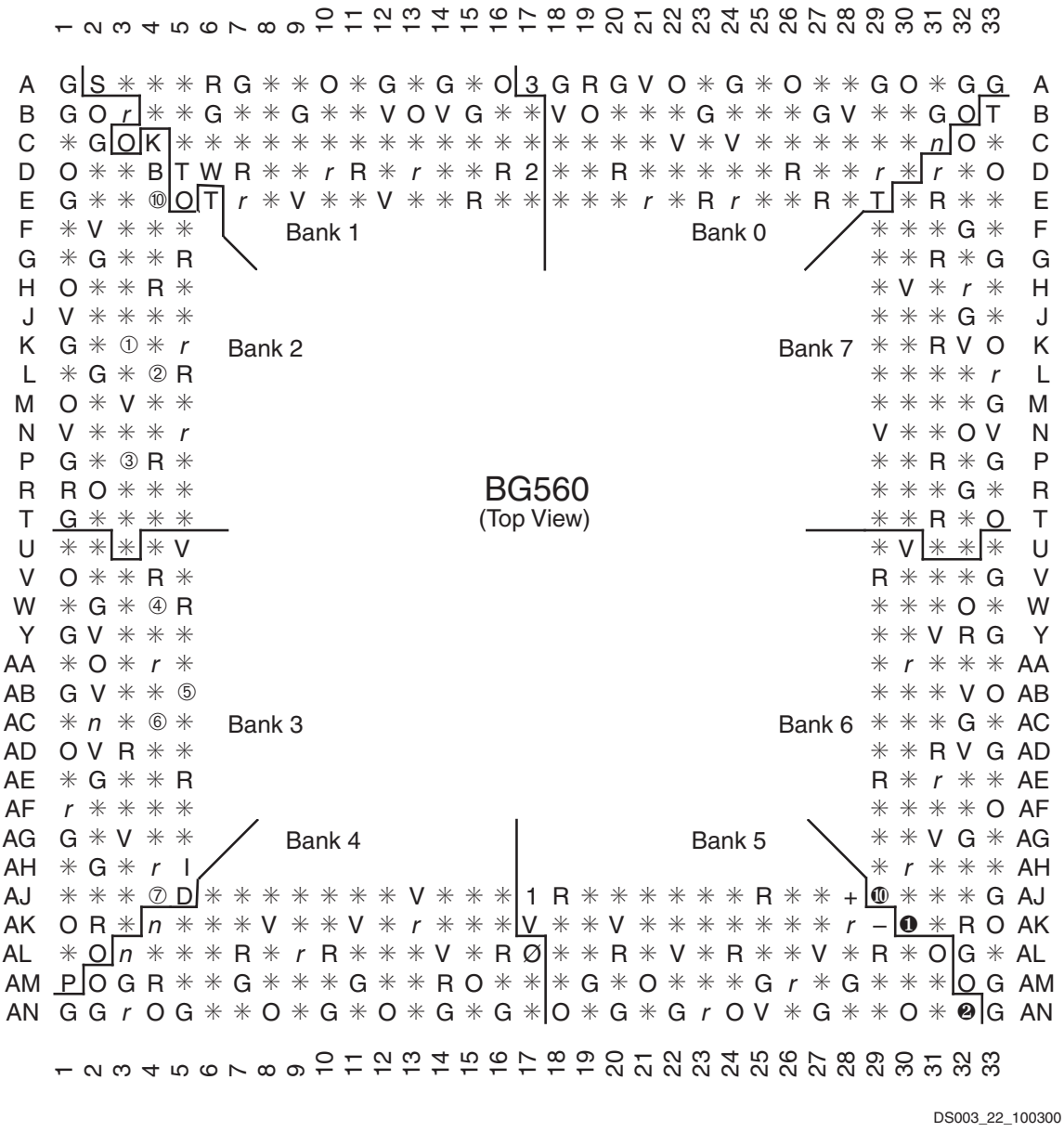

Figure 7: **BG560 Pin Function Diagram**

Product Obsolete/Under Obsolescence
XCV200-4FG256C Xilinx Inc. IC FPGA 176 I/O 256FBGA

FG256 Pin Function Diagram

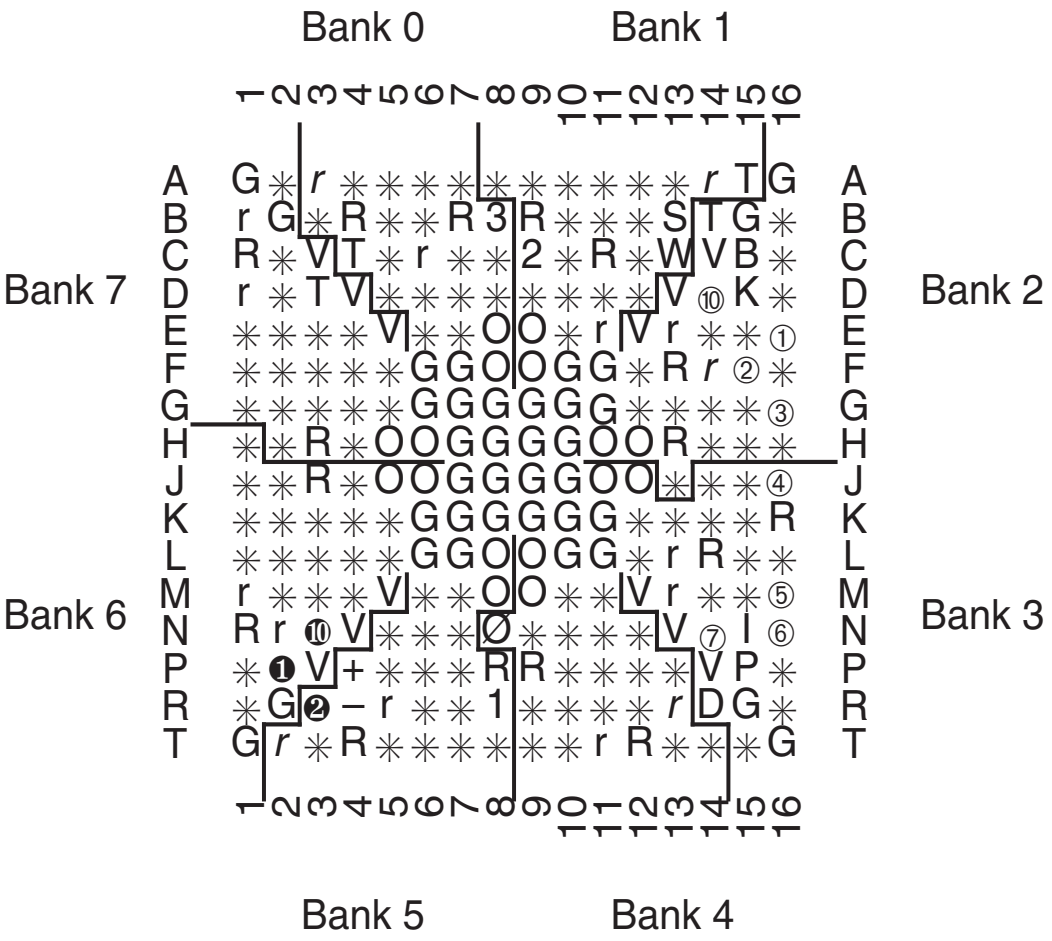

Figure 8: **FG256 Pin Function Diagram**

Product Obsolete/Under Obsolescence
XCV200-4FG256C Xilinx Inc. IC FPGA 176 I/O 256FBGA

FG456 Pin Function Diagram

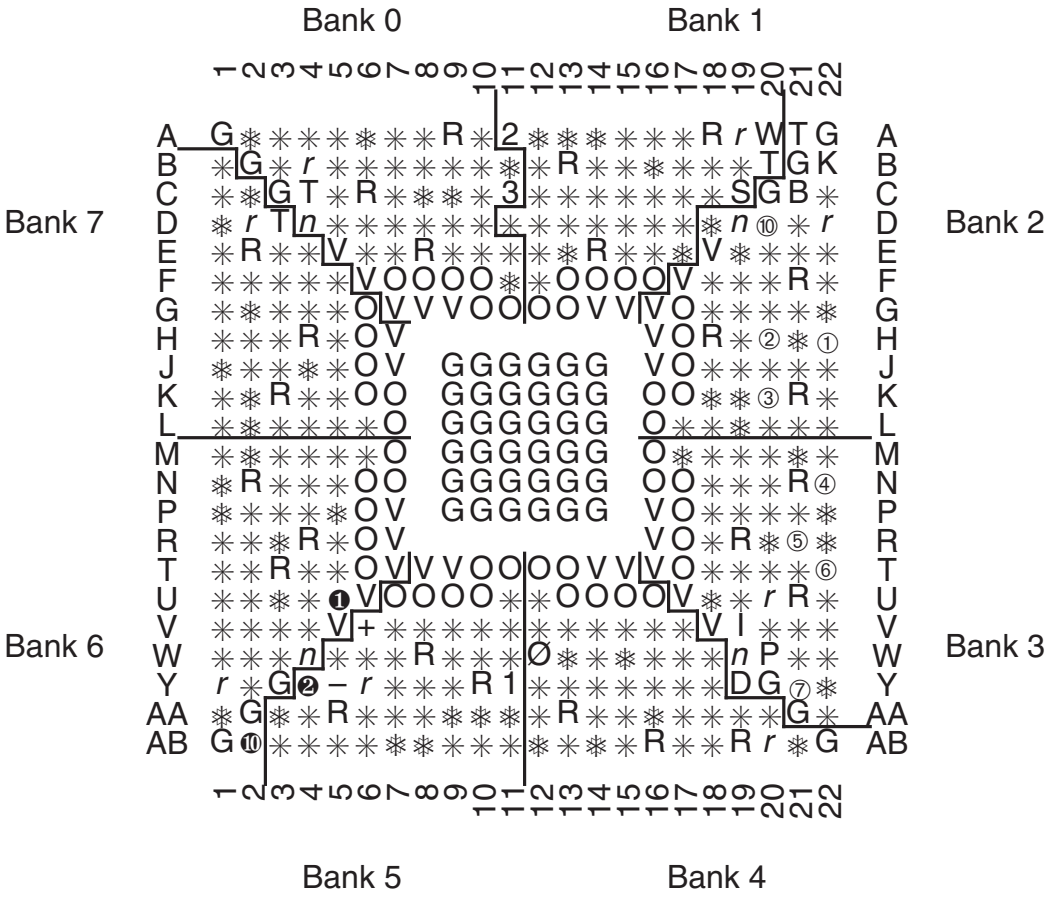

FG456
(Top view)

Figure 9: **FG456 Pin Function Diagram**

Notes:

Packages FG456 and FG676 are layout compatible.

Product Obsolete/Under Obsolescence
XCV200-4FG256C Xilinx Inc. IC FPGA 176 I/O 256FBGA

FG676 Pin Function Diagram

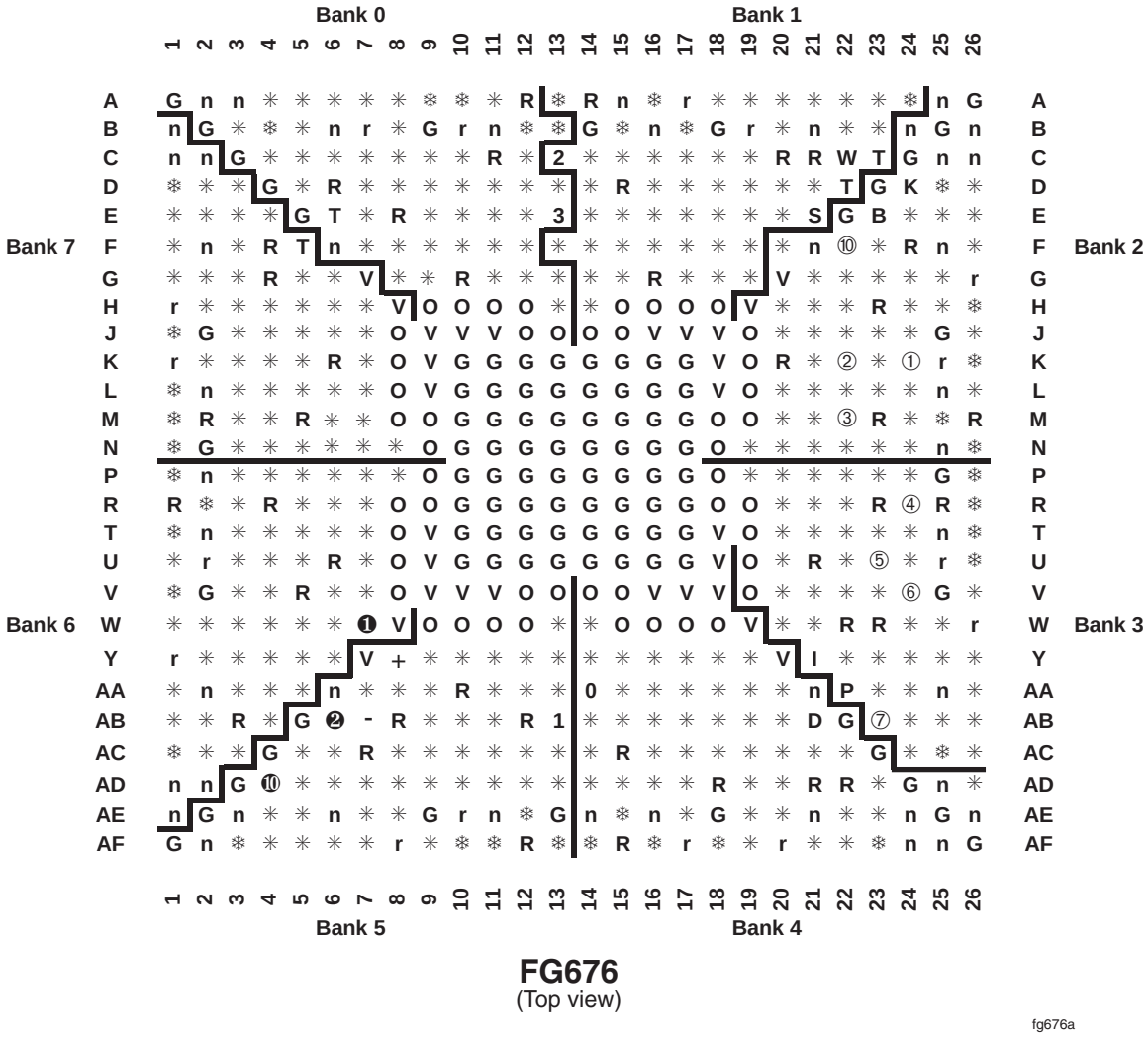

Figure 10: **FG676 Pin Function Diagram**

Notes:

Packages FG456 and FG676 are layout compatible.

Product Obsolete/Under Obsolescence
XCV200-4FG256C Xilinx Inc. IC FPGA 176 I/O 256FBGA

FG680 Pin Function Diagram

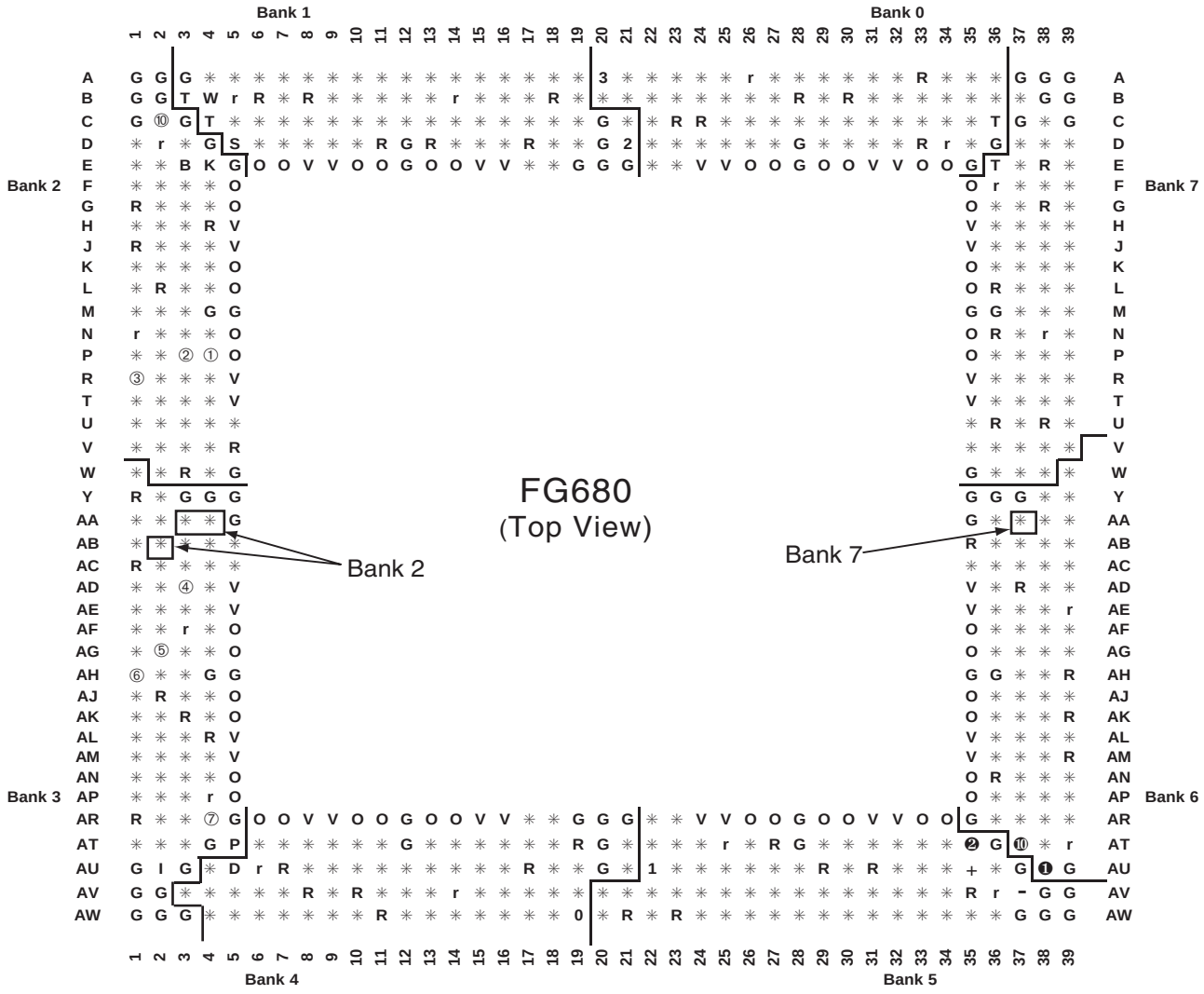

Figure 11: **FG680 Pin Function Diagram**

Product Obsolete/Under Obsolescence
XCV200-4FG256C Xilinx Inc. IC FPGA 176 I/O 256FBGA

Revision History

Date	Version	Revision
11/98	1.0	Initial Xilinx release.
01/99-02/99	1.2-1.3	Both versions updated package drawings and specs.
05/99	1.4	Addition of package drawings and specifications.
05/99	1.5	Replaced FG 676 & FG680 package drawings.
07/99	1.6	Changed Boundary Scan Information and changed Figure 11, Boundary Scan Bit Sequence. Updated IOB Input & Output delays. Added Capacitance info for different I/O Standards. Added 5 V tolerant information. Added DLL Parameters and waveforms and new Pin-to-pin Input and Output Parameter tables for Global Clock Input to Output and Setup and Hold. Changed Configuration Information including Figures 12, 14, 17 & 19. Added device-dependent listings for quiescent currents ICCINTQ and ICCOQ. Updated IOB Input and Output Delays based on default standard of LVTTL, 12 mA, Fast Slew Rate. Added IOB Input Switching Characteristics Standard Adjustments.
09/99	1.7	Speed grade update to preliminary status, Power-on specification and Clock-to-Out Minimums additions, "0" hold time listing explanation, quiescent current listing update, and Figure 6 ADDRA input label correction. Added T_{IJITCC} parameter, changed T_{OJIT} to T_{OPHASE}.
01/00	1.8	Update to speed.txt file 1.96. Corrections for CRs 111036,111137, 112697, 115479, 117153, 117154, and 117612. Modified notes for Recommended Operating Conditions (voltage and temperature). Changed Bank information for V_{CCO} in CS144 package on p.43.
01/00	1.9	Updated DLL Jitter Parameter table and waveforms, added Delay Measurement Methodology table for different I/O standards, changed buffered Hex line info and Input/Output Timing measurement notes.
03/00	2.0	New TBCKO values; corrected FG680 package connection drawing; new note about status of CCLK pin after configuration.
05/00	2.1	Modified "Pins not listed..." statement. Speed grade update to Final status.
05/00	2.2	Modified Table 18.
09/00	2.3	• Added XCV400 values to table under **Minimum Clock-to-Out for Virtex Devices**. • Corrected Units column in table under **IOB Input Switching Characteristics**. • Added values to table under **CLB SelectRAM Switching Characteristics**.
10/00	2.4	• Corrected pinout info for devices in the BG256, BG432, and BG560 pkgs in Table 18. • Corrected **BG256 Pin Function Diagram**.
04/02/01	2.5	• Revised minimums for **Global Clock Set-Up and Hold for LVTTL Standard, with DLL**. • Converted file to modularized format. See section **Virtex Data Sheet**, below.
04/19/01	2.6	• Corrected pinout information for FG676 device in Table 4. (Added AB22 pin.)
07/19/01	2.7	• Clarified V_{CCINT} pinout information and added AE19 pin for BG352 devices in Table 3. • Changed pinouts listed for BG352 XCV400 devices in banks 0 thru 7.
07/19/02	2.8	• Changed pinouts listed for GND in TQ144 devices (see Table 2).
03/01/13	4.0	The products listed in this data sheet are obsolete. See **XCN10016** for further information.

Virtex Data Sheet

The Virtex Data Sheet contains the following modules:

- DS003-1, Virtex 2.5V FPGAs:
  Introduction and Ordering Information (Module 1)
- DS003-2, Virtex 2.5V FPGAs:
  Functional Description (Module 2)
- DS003-3, Virtex 2.5V FPGAs:
  DC and Switching Characteristics (Module 3)
- DS003-4, Virtex 2.5V FPGAs:
  Pinout Tables (Module 4)

FPGAMALL
Authorized Distributor

OUR CERTIFICATE

A long-term cooperative relationship can be built between global customers and us by providing excellent products

Business Type	Trading Company, Distributor/Wholesaler
Main Products	Electronic Integrated Circuit
Certifications	ISO9001
Total Annual Revenue	US$2.5 Million - US$5 Million
Country / Region	Hongkong, China
Total Employees	100 - 200 People
Year Established	2018
Main Markets	North America South Asia Western Europe

sales@fpgamall.com
+00852-56428680