FPGAMALL
Authorized Distributor

https://www.fpgamall.com

THE DATASHEET OF FPGA

sales@fpgamall.com
+00852-56428680

Virtex UltraScale+ FPGA Data Sheet: DC and AC Switching Characteristics

DS923 (v1.15) March 13, 2020 **Product Specification**

Summary

The Xilinx® Virtex® UltraScale+™ FPGAs are available in -3, -2, -1 speed grades, with -3E devices having the highest performance. The -2LE devices can operate at a V_{CCINT} voltage at 0.85V or 0.72V and provide lower maximum static power. When operated at V_{CCINT} = 0.85V, using -2LE devices, the speed specification for the L devices is the same as the -2I speed grade. When operated at V_{CCINT} = 0.72V, the -2LE performance and static and dynamic power is reduced.

DC and AC characteristics are specified in extended (E), industrial (I), and military (M) temperature ranges. Except the operating temperature range or unless otherwise noted, all the DC and AC electrical parameters are the same for a particular speed grade (that is, the timing characteristics of a -1 speed grade extended device are the same as for a -1 speed grade industrial device). However, only selected speed grades and/or devices are available in each temperature range.

The XQ references in this data sheet are specific to the devices available in XQ Ruggedized packages. See the *Defense-Grade UltraScale Architecture Data Sheet: Overview* (DS895) for further information on XQ Defense-grade part numbers, packages, and ordering information.

All supply voltage and junction temperature specifications are representative of worst-case conditions. The parameters included are common to popular designs and typical applications.

This data sheet, part of an overall set of documentation on the Virtex UltraScale+ FPGAs, is available on the Xilinx website at www.xilinx.com/documentation.

DC Characteristics

Absolute Maximum Ratings

Table 1: **Absolute Maximum Ratings**

Symbol	Description[1]	Min	Max	Units
FPGA Logic				
V_{CCINT}	Internal supply voltage	–0.500	1.000	V
V_{CCINT_IO}[2]	Internal supply voltage for the I/O banks	–0.500	1.000	V
V_{CCAUX}	Auxiliary supply voltage	–0.500	2.000	V

© Copyright 2016–2020 Xilinx, Inc. Xilinx, the Xilinx logo, Alveo, Artix, Kintex, Spartan, Versal, Virtex, Vivado, Zynq, and other designated brands included herein are trademarks of Xilinx in the United States and other countries. PCI, PCIe, and PCI Express are trademarks of PCI-SIG and used under license. All other trademarks are the property of their respective owners.

Table 1: **Absolute Maximum Ratings** *(cont'd)*

Symbol	Description[1]	Min	Max	Units
V_{CCBRAM}	Supply voltage for the block RAM memories	–0.500	1.000	V
V_{CCO}	Output drivers supply voltage for HD I/O banks (VU19P only)	–0.500	3.400	V
	Output drivers supply voltage for HP I/O banks	–0.500	2.000	V
V_{CCAUX_IO}[3]	Auxiliary supply voltage for the I/O banks	–0.500	2.000	V
V_{REF}	Input reference voltage	–0.500	2.000	V
V_{IN}[4, 5, 6]	I/O input voltage for HD I/O banks (VU19P only)	–0.550	V_{CCO} + 0.550	V
	I/O input voltage for HP I/O banks	–0.550	V_{CCO} + 0.550	V
V_{BATT}	Key memory battery backup supply	–0.500	2.000	V
I_{DC}	Available output current at the pad	–20	20	mA
I_{RMS}	Available RMS output current at the pad	–20	20	mA
High Bandwidth Memory (HBM)				
V_{CC_HBM}	Supply voltage for the high-bandwidth memory	–0.300	1.500	V
$V_{CC_IO_HBM}$	I/O supply voltage for the high-bandwidth memory	–0.300	1.500	V
V_{CCAUX_HBM}	Auxiliary supply voltage for the high-bandwidth memory	–0.300	3.000	V
GTY or GTM Transceiver[7]				
V_{CCINT_GT}	Digital supply voltage for select modules in the GTM transceivers	–0.500	1.000	V
$V_{MGTAVCC}$	Analog supply voltage for transceiver circuits	–0.500	1.000	V
$V_{MGTAVTT}$	Analog supply voltage for transceiver termination circuits	–0.500	1.300	V
$V_{MGTVCCAUX}$	Auxiliary analog Quad PLL (QPLL) voltage supply for transceivers	–0.500	1.900	V
$V_{MGTREFCLK}$	Transceiver reference clock absolute input voltage	–0.500	1.300	V
$V_{MGTAVTTRCAL}$	Analog supply voltage for the resistor calibration circuit of the transceiver column	–0.500	1.300	V
V_{IN}	Receiver (RXP/RXN) and transmitter (TXP/TXN) absolute input voltage	–0.500	1.200	V
$I_{DCIN\text{-}FLOAT}$	DC input current for receiver input pins DC coupled RX termination = floating[8]	–	10	mA
$I_{DCIN\text{-}MGTAVTT}$	DC input current for receiver input pins DC coupled RX termination = $V_{MGTAVTT}$	–	10	mA
$I_{DCIN\text{-}GND}$	DC input current for receiver input pins DC coupled RX termination = GND[9]	–	0	mA
$I_{DCIN\text{-}PROG}$	DC input current for receiver input pins DC coupled RX termination = programmable[10]	–	0	mA
$I_{DCOUT\text{-}FLOAT}$	DC output current for transmitter pins DC coupled RX termination = floating	–	6	mA
$I_{DCOUT\text{-}MGTAVTT}$	DC output current for transmitter pins DC coupled RX termination = $V_{MGTAVTT}$	–	6	mA
System Monitor				
V_{CCADC}	System Monitor supply relative to GNDADC	–0.500	2.000	V
V_{REFP}	System Monitor reference input relative to GNDADC	–0.500	2.000	V
Temperature[11]				
T_{STG}	Storage temperature for XCVU31P, XCVU33P, XCVU35P, XCVU37P, XCVU45P, and XCVU47P[12]	–55	120	°C
	Storage temperature (ambient) for all other devices	–65	150	°C

Table 1: **Absolute Maximum Ratings** *(cont'd)*

Symbol	Description[1]	Min	Max	Units
T_{SOL}	Maximum dry rework soldering temperature	–	260	°C
	Maximum reflow soldering temperature for FFVC1517, FLGF1924, FHGA2104, FHGB2104, FHGC2104, FLGA2104, FLGB2104, FLGC2104, FLVA2104, FLVB2104, FLVC2104, FLGA2577	–	245	°C
	Maximum reflow soldering temperature for lidless packages with stiffener ring (FIGD2104, FSGD2104, FSVH1924, FSVH2104, FSGA2577, FSVH2892, FSVA3824, FSVB3824)	–	240	°C
	Maximum reflow soldering temperature for the FFRC1517, FFRA2104, FFRB2104, and FFRC2104 packages	–	225	°C
T_j	Maximum junction temperature for XCVU31P, XCVU33P, XCVU35P, XCVU37P, XCVU45P, and XCVU47P	–	120	°C
	Maximum junction temperature for all other devices	–	125	°C

Notes:

1. Stresses beyond those listed under Absolute Maximum Ratings might cause permanent damage to the device. These are stress ratings only, and functional operation of the device at these or any other conditions beyond those listed under Operating Conditions is not implied. Exposure to Absolute Maximum Ratings conditions for extended periods of time might affect device reliability.
2. V_{CCINT_IO} must be connected to V_{CCBRAM}.
3. V_{CCAUX_IO} must be connected to V_{CCAUX}.
4. The lower absolute voltage specification always applies.
5. For I/O operation, see the *UltraScale Architecture SelectIO Resources User Guide* (UG571).
6. When operating outside of the recommended operating conditions, refer to Table 4 and Table 5 for maximum overshoot and undershoot specifications.
7. For more information on supported GTY transceiver terminations see the *UltraScale Architecture GTY Transceivers User Guide* (UG578) or *Virtex UltraScale+ FPGAs GTM Transceivers User Guide* (UG581).
8. AC coupled operation is not supported for RX termination = floating.
9. For GTY transceivers, DC coupled operation is not supported for RX termination = GND.
10. DC coupled operation is not supported for RX termination = programmable.
11. For soldering guidelines and thermal considerations, see the *UltraScale and UltraScale+ FPGAs Packaging and Pinouts Product Specification* (UG575).
12. For devices with high-bandwidth memory (HBM), the storage temperature is the case surface temperature on the center/top side of the device. For the measurement conditions, refer to the JESD51-2 standard.

Recommended Operating Conditions

Table 2: **Recommended Operating Conditions**

Symbol	Description[1, 2]	Min	Typ	Max	Units
FPGA Logic					
V_{CCINT}	Internal supply voltage	0.825	0.850	0.876	V
	For -2LE (V_{CCINT} = 0.72V) devices: internal supply voltage	0.698	0.720	0.742	V
	For -3E devices: internal supply voltage	0.873	0.900	0.927	V
V_{CCINT_IO}[3]	Internal supply voltage for the I/O banks	0.825	0.850	0.876	V
	For -2LE (V_{CCINT} = 0.72V) devices: internal supply voltage for the I/O banks	0.825	0.850	0.876	V
	For -3E devices: internal supply voltage for the I/O banks	0.873	0.900	0.927	V
V_{CCBRAM}	Block RAM supply voltage	0.825	0.850	0.876	V
	For -3E devices: block RAM supply voltage	0.873	0.900	0.927	V
V_{CCAUX}	Auxiliary supply voltage	1.746	1.800	1.854	V

Table 2: **Recommended Operating Conditions** *(cont'd)*

Symbol	Description[1, 2]	Min	Typ	Max	Units
V_{CCO}[4, 5]	Supply voltage for HD I/O banks (VU19P only)	1.140	–	3.400	V
	Supply voltage for HP I/O banks	0.950	–	1.900	V
V_{CCAUX_IO}[6]	Auxiliary I/O supply voltage	1.746	1.800	1.854	V
V_{IN}[7]	I/O input voltage	–0.200	–	V_{CCO} + 0.200	V
I_{IN}[8]	Maximum current through any pin in a powered or unpowered bank when forward biasing the clamp diode	–	–	10	mA
V_{BATT}[9]	Battery voltage	1.000	–	1.890	V
High Bandwidth Memory					
V_{CC_HBM}	Supply voltage for the high-bandwidth memory (HBM)	1.164	1.200	1.236	V
$V_{CC_IO_HBM}$	I/O supply voltage for the high-bandwidth memory	1.164	1.200	1.236	V
V_{CCAUX_HBM}	Auxiliary supply voltage for the high-bandwidth memory	2.425	2.500	2.575	V
GTY or GTM Transceiver					
V_{CCINT_GT}	Digital supply voltage for select modules in the GTM transceivers	0.825	0.850	0.876	V
	For -3E devices: Digital supply voltage for select modules in the GTM transceivers supply voltage	0.873	0.900	0.927	V
$V_{MGTAVCC}$[10]	Analog supply voltage for the GTY or GTM transceiver	0.873	0.900	0.927	V
$V_{MGTAVTT}$[10]	Analog supply voltage for the GTY or GTM transmitter and receiver termination circuits	1.164	1.200	1.236	V
$V_{MGTVCCAUX}$[10]	Auxiliary analog QPLL voltage supply for the transceivers	1.746	1.800	1.854	V
$V_{MGTAVTTRCAL}$[10]	Analog supply voltage for the resistor calibration circuit of the GTY or GTM transceiver column	1.164	1.200	1.236	V
System Monitor					
V_{CCADC}	System Monitor supply relative to GNDADC	1.746	1.800	1.854	V
V_{REFP}	System Monitor externally supplied reference voltage relative to GNDADC	1.200	1.250	1.300	V

Table 2: **Recommended Operating Conditions** *(cont'd)*

Symbol	Description[1, 2]	Min	Typ	Max	Units
Temperature					
T_j[11]	Junction temperature operating range for XCVU31P, XCVU33P, XCVU35P, and XCVU37P, XCVU45P, and XCVU47P extended (E) temperature devices[12, 13, 14]	0	–	100	°C
	Junction temperature operating range for all other extended (E) temperature devices[12]	0	–	100	°C
	Junction temperature operating range for industrial (I) temperature devices	–40	–	100	°C
	Junction temperature operating range for eFUSE programming[15]	–40	–	125	°C

Notes:

1. All voltages are relative to GND.
2. For the design of the power distribution system consult the *UltraScale Architecture PCB Design User Guide* (UG583).
3. V_{CCINT_IO} must be connected to V_{CCBRAM}.
4. For V_{CCO_0}, the minimum recommended operating voltage for power on and during configuration is 1.425V. After configuration, data is retained even if V_{CCO} drops to 0V.
5. Includes V_{CCO} of 1.0V (HP I/O only), 1.2V, 1.35V, 1.5V, 1.8V, 2.5V (HD I/O only) at ±5%, and 3.3V (HD I/O only) at +3/–5%.
6. V_{CCAUX_IO} must be connected to V_{CCAUX}.
7. The lower absolute voltage specification always applies.
8. A total of 200 mA per bank should not be exceeded.
9. If battery is not used, connect V_{BATT} to either GND or V_{CCAUX}.
10. Each voltage listed requires filtering as described in the *UltraScale Architecture GTY Transceivers User Guide* (UG578) or the *Virtex UltraScale + FPGAs GTM Transceivers User Guide* (UG581).
11. Xilinx recommends measuring the T_j of a device using the system monitor as described in the *UltraScale Architecture System Monitor User Guide* (UG580). The system monitor temperature measurement errors (that are described in Table 78) must be accounted for in your design. For example, when using the system monitor with an external reference of 1.25V, and when the system monitor reports 97°C, there is a measurement error ±3°C. A reading of 97°C is considered the maximum adjusted T_j (100°C – 3°C = 97°C).
12. Devices labeled with the speed/temperature grade of -2LE can operate for a limited time at a junction temperature between 100°C and 110°C. Timing parameters adhere to the same speed file at 110°C as they do below 110°C, regardless of operating voltage (nominal voltage of 0.85V or a low-voltage of 0.72V). Operation up to T_j = 110°C is limited to 1% of the device lifetime and can occur sequentially or at regular intervals as long as the total time does not exceed 1% of the device lifetime.
13. The recommended maximum operating temperature for high-bandwidth memory is 95°C.
14. Devices with HBM and labeled with the speed/temperature grade of -2LE can operate for a limited time at a junction temperature between 95°C and 105°C. HBM operation up to T_j = 105°C is limited to 4.1% of the device lifetime and can occur sequentially or at regular intervals as long as the total time does not exceed 4.1% of the device lifetime, and for no longer than 96 hours at a time. While operating the HBM above 95°C, the refresh rate must be at least 4x the refresh rate at 95°C.
15. Do not program eFUSE during device configuration (e.g., during configuration, during configuration readback, or when readback CRC is active).

DC Characteristics Over Recommended Operating Conditions

Table 3: **DC Characteristics Over Recommended Operating Conditions**

Symbol	Description	Min	Typ[1]	Max	Units
V_{DRINT}	Data retention V_{CCINT} voltage (below which configuration data might be lost)	0.68	–	–	V
V_{DRAUX}	Data retention V_{CCAUX} voltage (below which configuration data might be lost)	1.5	–	–	V
I_{REF}	V_{REF} leakage current per pin	–	–	15	µA
I_L	Input or output leakage current per pin (sample-tested)[2]	–	–	15	µA
C_{IN}[3]	Die input capacitance at the pad (HP I/O)	–	–	3.1	pF
	Die input capacitance at the pad (HD I/O)	–	–	4.75	pF

Table 3: **DC Characteristics Over Recommended Operating Conditions** *(cont'd)*

Symbol	Description	Min	Typ[1]	Max	Units
I_{RPU}	Pad pull-up (when selected) at V_{IN} = 0V, V_{CCO} = 3.3V	75	–	190	µA
	Pad pull-up (when selected) at V_{IN} = 0V, V_{CCO} = 2.5V	50	–	169	µA
	Pad pull-up (when selected) at V_{IN} = 0V, V_{CCO} = 1.8V	60	–	120	µA
	Pad pull-up (when selected) at V_{IN} = 0V, V_{CCO} = 1.5V	30	–	120	µA
	Pad pull-up (when selected) at V_{IN} = 0V, V_{CCO} = 1.2V	10	–	100	µA
I_{RPD}	Pad pull-down (when selected) at V_{IN} = 3.3V	60	–	200	µA
	Pad pull-down (when selected) at V_{IN} = 1.8V	29	–	120	µA
$I_{CCADCON}$	Analog supply current for the SYSMON circuits in the power-up state	–	–	8	mA
$I_{CCADCOFF}$	Analog supply current for the SYSMON circuits in the power-down state	–	–	1.5	mA
I_{BATT}[4, 5]	Battery supply current at V_{BATT} = 1.89V	–	–	650	nA
	Battery supply current at V_{BATT} = 1.20V	–	–	150	nA
I_{PFS}[6]	V_{CCAUX} additional supply current during eFUSE programming	–	–	115	mA
Calibrated programmable on-die termination (DCI) in HP I/O banks[7] (measured per JEDEC specification)					
R[9]	Thevenin equivalent resistance of programmable input termination to V_{CCO}/2 where ODT = RTT_40	–10%[8]	40	+10%[8]	Ω
	Thevenin equivalent resistance of programmable input termination to V_{CCO}/2 where ODT = RTT_48	–10%[8]	48	+10%[8]	Ω
	Thevenin equivalent resistance of programmable input termination to V_{CCO}/2 where ODT = RTT_60	–10%[8]	60	+10%[8]	Ω
	Programmable input termination to V_{CCO} where ODT = RTT_40	–10%[8]	40	+10%[8]	Ω
	Programmable input termination to V_{CCO} where ODT = RTT_48	–10%[8]	48	+10%[8]	Ω
	Programmable input termination to V_{CCO} where ODT = RTT_60	–10%[8]	60	+10%[8]	Ω
	Programmable input termination to V_{CCO} where ODT = RTT_120	–10%[8]	120	+10%[8]	Ω
	Programmable input termination to $V_{CCO}$where ODT = RTT_240	–10%[8]	240	+10%[8]	Ω
Uncalibrated programmable on-die termination in HP I/Os banks (measured per JEDEC specification)					
R[9]	Thevenin equivalent resistance of programmable input termination to V_{CCO}/2 where ODT = RTT_40	–50%	40	+50%	Ω
	Thevenin equivalent resistance of programmable input termination to V_{CCO}/2 where ODT = RTT_48	–50%	48	+50%	Ω
	Thevenin equivalent resistance of programmable input termination to V_{CCO}/2 where ODT = RTT_60	–50%	60	+50%	Ω
	Programmable input termination to V_{CCO} where ODT = RTT_40	–50%	40	+50%	Ω
	Programmable input termination to V_{CCO} where ODT = RTT_48	–50%	48	+50%	Ω
	Programmable input termination to V_{CCO} where ODT = RTT_60	–50%	60	+50%	Ω
	Programmable input termination to V_{CCO} where ODT = RTT_120	–50%	120	+50%	Ω
	Programmable input termination to V_{CCO} where ODT = RTT_240	–50%	240	+50%	Ω
Uncalibrated programmable on-die termination in HD I/O banks (measured per JEDEC specification)					
R[9]	Thevenin equivalent resistance of programmable input termination to V_{CCO}/2 where ODT = RTT_48	–50%	48	+50%	Ω
Internal V_{REF}	50% V_{CCO}	V_{CCO} x 0.49	V_{CCO} x 0.50	V_{CCO} x 0.51	V
	70% V_{CCO}	V_{CCO} x 0.69	V_{CCO} x 0.70	V_{CCO} x 0.71	V
Differential termination	Programmable differential termination (TERM_100) for HP I/O banks	–35%	100	+35%	Ω
n	Temperature diode ideality factor	–	1.026	–	–

Table 3: **DC Characteristics Over Recommended Operating Conditions** *(cont'd)*

Symbol	Description	Min	Typ[1]	Max	Units
r	Temperature diode series resistance	–	2	–	Ω

Notes:

1. Typical values are specified at nominal voltage, 25°C.
2. For the HP I/O banks with a V_{CCO} of 1.8V and separated V_{CCO} and V_{CCAUX_IO} power supplies, the I_L maximum current is 70 µA.
3. This measurement represents the die capacitance at the pad, not including the package.
4. Maximum value specified for worst case process at 25°C.For the XCVU5P, XCVU7P, XCVU9P, XCVU11P, XCVU13P, XCVU19P, XCVU27P, XCVU29P, XCVU35P, XCVU37P, XCVU45P, and XCVU47P devices, multiply the value by the number of super-logic regions (SLRs) in the device.
5. I_{BATT} is measured when the battery-backed RAM (BBRAM) is enabled.
6. Do not program eFUSE during device configuration (e.g., during configuration, during configuration readback, or when readback CRC is active).
7. VRP resistor tolerance is (240Ω ±1%).
8. If VRP resides at a different bank (DCI cascade), the range increases to ±15%.
9. On-die input termination resistance, for more information see the *UltraScale Architecture SelectIO Resources User Guide* (UG571).

V_{IN} Maximum Allowed AC Voltage Overshoot and Undershoot

Table 4: **V_{IN} Maximum Allowed AC Voltage Overshoot and Undershoot for HD I/O Banks**

AC Voltage Overshoot[1]	% of UI[2] at –40°C to 100°C	AC Voltage Undershoot[1]	% of UI[2] at –40°C to 100°C
V_{CCO} + 0.30	100%	–0.30	100%
V_{CCO} + 0.35	100%	–0.35	90%
V_{CCO} + 0.40	100%	–0.40	78%
V_{CCO} + 0.45	100%	–0.45	40%
V_{CCO} + 0.50	100%	–0.50	24%
V_{CCO} + 0.55	100%	–0.55	18.0%
V_{CCO} + 0.60	100%	–0.60	13.0%
V_{CCO} + 0.65	100%	–0.65	10.8%
V_{CCO} + 0.70	92%	–0.70	9.0%
V_{CCO} + 0.75	92%	–0.75	7.0%
V_{CCO} + 0.80	92%	–0.80	6.0%
V_{CCO} + 0.85	92%	–0.85	5.0%
V_{CCO} + 0.90	92%	–0.90	4.0%
V_{CCO} + 0.95	92%	–0.95	2.5%

Notes:

1. A total of 200 mA per bank should not be exceeded.
2. For UI smaller than 20 µs.
3. For the -1M devices, the temperature limits are –55°C to 125°C.

Table 5: **V_{IN} Maximum Allowed AC Voltage Overshoot and Undershoot for HP I/O Banks**

AC Voltage Overshoot[1]	% of UI[2] at –40°C to 100°C	AC Voltage Undershoot[1]	% of UI[2] at –40°C to 100°C
V_{CCO} + 0.30	100%	–0.30	100%
V_{CCO} + 0.35	100%	–0.35	100%
V_{CCO} + 0.40	92%	–0.40	92%
V_{CCO} + 0.45	50%	–0.45	50%
V_{CCO} + 0.50	20%	–0.50	20%
V_{CCO} + 0.55	10%	–0.55	10%
V_{CCO} + 0.60	6%	–0.60	6%
V_{CCO} + 0.65	2%	–0.65	2%
V_{CCO} + 0.70	2%	–0.70	2%

Notes:
1. A total of 200 mA per bank should not be exceeded.
2. For UI smaller than 20 µs.
3. For the -1M devices, the temperature limits are –55°C to 125°C.

Quiescent Supply Current

Table 6: **Typical Quiescent Supply Current**

Symbol	Description[1, 2, 3]	Device	Speed Grade and V_{CCINT} Operating Voltages				Units
			0.90V	0.85V		0.72V	
			-3	-2	-1	-2	
I_{CCINTQ}	Quiescent V_{CCINT} supply current	XCVU3P	2384	2276	2276	2017	mA
		XCVU5P	4769	4552	4552	4034	mA
		XCVU7P	4769	4552	4552	4034	mA
		XCVU9P	7153	6828	6828	6050	mA
		XCVU11P	7567	7202	7202	6332	mA
		XCVU13P	10090	9602	9602	8442	mA
		XCVU19P	N/A	21219	21219	N/A	mA
		XCVU27P	9962	9516	9516	8449	mA
		XCVU29P	9962	9516	9516	8449	mA
		XCVU31P	2528	2406	2406	2115	mA
		XCVU33P	2528	2406	2406	2115	mA
		XCVU35P	5051	4807	4807	4226	mA
		XCVU37P	7573	7207	7207	6336	mA
		XCVU45P	5051	4807	4807	4226	mA
		XCVU47P	7573	7207	7207	6336	mA

Table 6: **Typical Quiescent Supply Current** *(cont'd)*

Symbol	Description[1, 2, 3]	Device	Speed Grade and V_{CCINT} Operating Voltages				Units
			0.90V	0.85V		0.72V	
			-3	-2	-1	-2	
I_{CCINT_IOQ}	Quiescent V_{CCINT_IO} supply current	XCVU3P	149	144	144	144	mA
		XCVU5P	298	287	287	287	mA
		XCVU7P	298	287	287	287	mA
		XCVU9P	447	431	431	431	mA
		XCVU11P	182	176	176	176	mA
		XCVU13P	243	234	234	234	mA
		XCVU19P	N/A	515	515	N/A	mA
		XCVU27P	241	232	232	232	mA
		XCVU29P	241	232	232	232	mA
		XCVU31P	747	723	723	723	mA
		XCVU33P	747	723	723	723	mA
		XCVU35P	776	750	750	750	mA
		XCVU37P	804	778	778	778	mA
		XCVU45P	776	750	750	750	mA
		XCVU47P	804	778	778	778	mA
I_{CCOQ}	Quiescent V_{CCO} supply current	All devices	1	1	1	1	mA
I_{CCAUXQ}	Quiescent V_{CCAUX} supply current	XCVU3P	268	268	268	268	mA
		XCVU5P	535	535	535	535	mA
		XCVU7P	535	535	535	535	mA
		XCVU9P	1015	1015	1015	1015	mA
		XCVU11P	819	819	819	819	mA
		XCVU13P	1091	1091	1091	1091	mA
		XCVU19P	N/A	1662	1662	N/A	mA
		XCVU27P	1091	1091	1091	1091	mA
		XCVU29P	1091	1091	1091	1091	mA
		XCVU31P	223	223	223	223	mA
		XCVU33P	223	223	223	223	mA
		XCVU35P	444	444	444	444	mA
		XCVU37P	665	665	665	665	mA
		XCVU45P	444	444	444	444	mA
		XCVU47P	665	665	665	665	mA

Table 6: **Typical Quiescent Supply Current** *(cont'd)*

Symbol	Description[1, 2, 3]	Device	Speed Grade and V_{CCINT} Operating Voltages				Units
			0.90V	0.85V		0.72V	
			-3	-2	-1	-2	
I_{CCAUX_IOQ}	Quiescent V_{CCAUX_IO} supply current	XCVU3P	62	62	62	62	mA
		XCVU5P	124	124	124	124	mA
		XCVU7P	124	124	124	124	mA
		XCVU9P	187	187	187	187	mA
		XCVU11P	79	79	79	79	mA
		XCVU13P	105	105	105	105	mA
		XCVU19P	N/A	218	218	N/A	mA
		XCVU27P	105	105	105	105	mA
		XCVU29P	105	105	105	105	mA
		XCVU31P	27	27	27	27	mA
		XCVU33P	27	27	27	27	mA
		XCVU35P	53	53	53	53	mA
		XCVU37P	80	80	80	80	mA
		XCVU45P	53	53	53	53	mA
		XCVU47P	80	80	80	80	mA
$I_{CCBRAMQ}$	Quiescent V_{CCBRAM} supply current	XCVU3P	45	43	43	43	mA
		XCVU5P	90	85	85	85	mA
		XCVU7P	90	85	85	85	mA
		XCVU9P	134	128	128	128	mA
		XCVU11P	130	124	124	124	mA
		XCVU13P	174	165	165	165	mA
		XCVU19P	N/A	114	114	N/A	mA
		XCVU27P	174	165	165	165	mA
		XCVU29P	174	165	165	165	mA
		XCVU31P	43	41	41	41	mA
		XCVU33P	43	41	41	41	mA
		XCVU35P	87	83	83	83	mA
		XCVU37P	130	124	124	124	mA
		XCVU45P	87	83	83	83	mA
		XCVU47P	130	124	124	124	mA

Notes:

1. Typical values are specified at nominal voltage, 85°C junction temperatures (T_j) with single-ended SelectIO™ resources.
2. Typical values are for blank configured devices with no output current loads, no active input pull-up resistors, and all I/O pins are 3-state and floating.
3. Use the Xilinx® Power Estimator (XPE) spreadsheet tool (download at www.xilinx.com/power) to estimate static power consumption for conditions or supplies other than those specified.

Power Supply Sequencing

Power-On/Off Power Supply Sequencing

The recommended power-on sequence is V_{CCINT}, V_{CCINT_IO}/V_{CCBRAM}, V_{CCAUX}/V_{CCAUX_IO}, and V_{CCO} to achieve minimum current draw and ensure that the I/Os are 3-stated at power-on. The recommended power-off sequence is the reverse of the power-on sequence. If V_{CCINT} and V_{CCINT_IO}/V_{CCBRAM} have the same recommended voltage levels, they can be powered by the same supply and ramped simultaneously. V_{CCINT_IO} must be connected to V_{CCBRAM}. If V_{CCAUX}/V_{CCAUX_IO} and V_{CCO} have the same recommended voltage levels, they can be powered by the same supply and ramped simultaneously. V_{CCAUX} and V_{CCAUX_IO} must be connected together. V_{CCADC} and V_{REF} can be powered at any time and have no power-up sequencing requirements.

For devices with HBM, the HBM power supplies can be powered on/off after or in-parallel with the core power supplies. The required power-on sequence is V_{CCAUX_HBM} and V_{CCINT_IO} followed by V_{CC_HBM}/$V_{CC_IO_HBM}$. $V_{CC_IO_HBM}$ must be connected to V_{CC_HBM}. V_{CCAUX_HBM} must be equal to or higher than V_{CC_HBM} at all times. The recommended power-off sequence is the reverse of the power-on sequence.

The recommended power-on sequence to achieve minimum current draw for the GTY or GTM transceivers is V_{CCINT}, V_{CCINT_GT}, $V_{MGTAVCC}$, $V_{MGTAVTT}$ OR $V_{MGTAVCC}$, V_{CCINT}, V_{CCINT_GT}, $V_{MGTAVTT}$. There is no recommended sequencing for $V_{MGTVCCAUX}$. Both $V_{MGTAVCC}$ and V_{CCINT} can be ramped simultaneously. When V_{CCINT} and V_{CCINT_GT} have the same recommended operating conditions, V_{CCINT} and V_{CCINT_GT} can be connected to the same power regulation circuit. When V_{CCINT} and V_{CCINT_GT} are connected to separate regulation circuits, V_{CCINT_GT} must be within the recommended operating condition before device configuration.The recommended power-off sequence is the reverse of the power-on sequence to achieve minimum current draw. If these recommended sequences are not met, current drawn from $V_{MGTAVTT}$ can be higher than specifications during power-up and power-down.

Power Supply Requirements

Table 7 shows the minimum current, in addition to I_{CCQ} maximum, required by each Virtex UltraScale+ FPGA for proper power-on and configuration. If these current minimums are met, the device powers on after all supplies have passed through their power-on reset threshold voltages. The device must not be configured until after V_{CCINT} is applied. Once initialized and configured, use the Xilinx Power Estimator (XPE) tools to estimate current drain on these supplies. The XPE spreadsheet tool (download at http://www.xilinx.com/power) is also used to estimate power-on current for all supplies.

Table 7: **Power-on Current by Device**

Device	$I_{CCINTMIN}$	$I_{CCINT_IOMIN} + I_{CCBRAMMIN}$	I_{CCOMIN}	$I_{CCAUXMIN} + I_{CCAUX_IOMIN}$	Units
XCVU3P, XQVU3P	I_{CCINTQ} + 2000	$I_{CCBRAMQ} + I_{CCINT_IOQ}$ + 670	I_{CCOQ} + 50	$I_{CCAUXQ} + I_{CCAUX_IOQ}$ + 350	mA
XCVU5P	I_{CCINTQ} + 4000	$I_{CCBRAMQ} + I_{CCINT_IOQ}$ + 1340	I_{CCOQ} + 100	$I_{CCAUXQ} + I_{CCAUX_IOQ}$ + 700	mA
XCVU7P, XQVU7P	I_{CCINTQ} + 4000	$I_{CCBRAMQ} + I_{CCINT_IOQ}$ + 1340	I_{CCOQ} + 100	$I_{CCAUXQ} + I_{CCAUX_IOQ}$ + 700	mA
XCVU9P	I_{CCINTQ} + 6000	$I_{CCBRAMQ} + I_{CCINT_IOQ}$ + 2010	I_{CCOQ} + 150	$I_{CCAUXQ} + I_{CCAUX_IOQ}$ + 1050	mA
XCVU11P, XQVU11P	I_{CCINTQ} + 6549	$I_{CCBRAMQ} + I_{CCINT_IOQ}$ + 2194	I_{CCOQ} + 164	$I_{CCAUXQ} + I_{CCAUX_IOQ}$ + 1146	mA
XCVU13P	I_{CCINTQ} + 8731	$I_{CCBRAMQ} + I_{CCINT_IOQ}$ + 2925	I_{CCOQ} + 219	$I_{CCAUXQ} + I_{CCAUX_IOQ}$ + 1528	mA
XCVU19P	I_{CCINTQ} + 20737	$I_{CCBRAMQ} + I_{CCINT_IOQ}$ + 6947	I_{CCOQ} + 519	$I_{CCAUXQ} + I_{CCAUX_IOQ}$ + 3629	mA
XCVU27P	I_{CCINTQ} + 8770	$I_{CCBRAMQ} + I_{CCINT_IOQ}$ + 2938	I_{CCOQ} + 220	$I_{CCAUXQ} + I_{CCAUX_IOQ}$ + 1535	mA
XCVU29P	I_{CCINTQ} + 8770	$I_{CCBRAMQ} + I_{CCINT_IOQ}$ + 2938	I_{CCOQ} + 220	$I_{CCAUXQ} + I_{CCAUX_IOQ}$ + 1535	mA
XCVU31P	I_{CCINTQ} + 2232	$I_{CCBRAMQ} + I_{CCINT_IOQ}$ + 2500	I_{CCOQ} + 56	$I_{CCAUXQ} + I_{CCAUX_IOQ}$ + 500	mA
XCVU33P	I_{CCINTQ} + 2232	$I_{CCBRAMQ} + I_{CCINT_IOQ}$ + 2500	I_{CCOQ} + 56	$I_{CCAUXQ} + I_{CCAUX_IOQ}$ + 500	mA
XCVU35P	I_{CCINTQ} + 4424	$I_{CCBRAMQ} + I_{CCINT_IOQ}$ + 3537	I_{CCOQ} + 111	$I_{CCAUXQ} + I_{CCAUX_IOQ}$ + 882	mA
XCVU37P	I_{CCINTQ} + 6617	$I_{CCBRAMQ} + I_{CCINT_IOQ}$ + 4574	I_{CCOQ} + 166	$I_{CCAUXQ} + I_{CCAUX_IOQ}$ + 1264	mA
XCVU45P	I_{CCINTQ} + 4424	$I_{CCBRAMQ} + I_{CCINT_IOQ}$ + 3537	I_{CCOQ} + 111	$I_{CCAUXQ} + I_{CCAUX_IOQ}$ + 882	mA
XCVU47P	I_{CCINTQ} + 6617	$I_{CCBRAMQ} + I_{CCINT_IOQ}$ + 4574	I_{CCOQ} + 166	$I_{CCAUXQ} + I_{CCAUX_IOQ}$ + 1264	mA

Table 8: **Power Supply Ramp Time**

Symbol	Description	Min	Max	Units
T_{VCCINT}	Ramp time from GND to 95% of V_{CCINT}	0.2	40	ms
T_{VCCINT_IO}	Ramp time from GND to 95% of V_{CCINT_IO}	0.2	40	ms
T_{VCCO}	Ramp time from GND to 95% of V_{CCO}	0.2	40	ms
T_{VCCAUX}	Ramp time from GND to 95% of V_{CCAUX}	0.2	40	ms
$T_{VCCBRAM}$	Ramp time from GND to 95% of V_{CCBRAM}	0.2	40	ms
T_{VCC_HBM}	Ramp time from GND to 95% of V_{CC_HBM}	0.2	40	ms
$T_{VCC_IO_HBM}$	Ramp time from GND to 95% of $V_{CC_IO_HBM}$	0.2	40	ms
T_{VCCAUX_HBM}	Ramp time from GND to 95% of V_{CCAUX_HBM}	0.2	40	ms
$T_{MGTAVCC}$	Ramp time from GND to 95% of $V_{MGTAVCC}$	0.2	40	ms
$T_{MGTAVTT}$	Ramp time from GND to 95% of $V_{MGTAVTT}$	0.2	40	ms
$T_{MGTVCCAUX}$	Ramp time from GND to 95% of $V_{MGTVCCAUX}$	0.2	40	ms

DC Input and Output Levels

Values for V_{IL} and V_{IH} are recommended input voltages. Values for I_{OL} and I_{OH} are guaranteed over the recommended operating conditions at the V_{OL} and V_{OH} test points. Only selected standards are tested. These are chosen to ensure that all standards meet their specifications. The selected standards are tested at a minimum V_{CCO} with the respective V_{OL} and V_{OH} voltage levels shown. Other standards are sample tested.

I/O Levels

Table 9: **SelectIO DC Input and Output Levels For HD I/O Banks**

I/O Standard[1, 2]	V_{IL}		V_{IH}		V_{OL}	V_{OH}	I_{OL}	I_{OH}
	V, Min	V, Max	V, Min	V, Max	V, Max	V, Min	mA	mA
HSTL_I	–0.300	V_{REF} – 0.100	V_{REF} + 0.100	V_{CCO} + 0.300	0.400	V_{CCO} – 0.400	8.0	–8.0
HSTL_I_18	–0.300	V_{REF} – 0.100	V_{REF} + 0.100	V_{CCO} + 0.300	0.400	V_{CCO} – 0.400	8.0	–8.0
HSUL_12	–0.300	V_{REF} – 0.130	V_{REF} + 0.130	V_{CCO} + 0.300	20% V_{CCO}	80% V_{CCO}	0.1	–0.1
LVCMOS12	–0.300	35% V_{CCO}	65% V_{CCO}	V_{CCO} + 0.300	0.400	V_{CCO} – 0.400	Note 3	Note 3
LVCMOS15	–0.300	35% V_{CCO}	65% V_{CCO}	V_{CCO} + 0.300	0.450	V_{CCO} – 0.450	Note 4	Note 4
LVCMOS18	–0.300	35% V_{CCO}	65% V_{CCO}	V_{CCO} + 0.300	0.450	V_{CCO} – 0.450	Note 4	Note 4
LVCMOS25	–0.300	0.700	1.700	V_{CCO} + 0.300	0.400	V_{CCO} – 0.400	Note 4	Note 4
LVCMOS33	–0.300	0.800	2.000	3.400	0.400	V_{CCO} – 0.400	Note 4	Note 4
LVTTL	–0.300	0.800	2.000	3.400	0.400	2.400	Note 4	Note 4
SSTL12	–0.300	V_{REF} – 0.100	V_{REF} + 0.100	V_{CCO} + 0.300	V_{CCO}/2 – 0.150	V_{CCO}/2 + 0.150	14.25	–14.25
SSTL135	–0.300	V_{REF} – 0.090	V_{REF} + 0.090	V_{CCO} + 0.300	V_{CCO}/2 – 0.150	V_{CCO}/2 + 0.150	8.9	–8.9
SSTL135_II	–0.300	V_{REF} – 0.090	V_{REF} + 0.090	V_{CCO} + 0.300	V_{CCO}/2 – 0.150	V_{CCO}/2 + 0.150	13.0	–13.0
SSTL15	–0.300	V_{REF} – 0.100	V_{REF} + 0.100	V_{CCO} + 0.300	V_{CCO}/2 – 0.175	V_{CCO}/2 + 0.175	8.9	–8.9
SSTL15_II	–0.300	V_{REF} – 0.100	V_{REF} + 0.100	V_{CCO} + 0.300	V_{CCO}/2 – 0.175	V_{CCO}/2 + 0.175	13.0	–13.0
SSTL18_I	–0.300	V_{REF} – 0.125	V_{REF} + 0.125	V_{CCO} + 0.300	V_{CCO}/2 – 0.470	V_{CCO}/2 + 0.470	8.0	–8.0
SSTL18_II	–0.300	V_{REF} – 0.125	V_{REF} + 0.125	V_{CCO} + 0.300	V_{CCO}/2 – 0.600	V_{CCO}/2 + 0.600	13.4	–13.4

Notes:

1. Tested according to relevant specifications.
2. Standards specified using the default I/O standard configuration. For details, see the *UltraScale Architecture SelectIO Resources User Guide* (UG571).
3. Supported drive strengths of 4, 8, or 12 mA in HD I/O banks.
4. Supported drive strengths of 4, 8, 12, or 16 mA in HD I/O banks.

Table 10: **SelectIO DC Input and Output Levels for HP I/O Banks**

I/O Standard[1, 2, 3]	V_{IL}		V_{IH}		V_{OL}	V_{OH}	I_{OL}	I_{OH}
	V, Min	V, Max	V, Min	V, Max	V, Max	V, Min	mA	mA
HSTL_I	–0.300	V_{REF} – 0.100	V_{REF} + 0.100	V_{CCO} + 0.300	0.400	V_{CCO} – 0.400	5.8	–5.8
HSTL_I_12	–0.300	V_{REF} – 0.080	V_{REF} + 0.080	V_{CCO} + 0.300	25% V_{CCO}	75% V_{CCO}	4.1	–4.1
HSTL_I_18	–0.300	V_{REF} – 0.100	V_{REF} + 0.100	V_{CCO} + 0.300	0.400	V_{CCO} – 0.400	6.2	–6.2
HSUL_12	–0.300	V_{REF} – 0.130	V_{REF} + 0.130	V_{CCO} + 0.300	20% V_{CCO}	80% V_{CCO}	0.1	–0.1
LVCMOS12	–0.300	35% V_{CCO}	65% V_{CCO}	V_{CCO} + 0.300	0.400	V_{CCO} – 0.400	Note 4	Note 4
LVCMOS15	–0.300	35% V_{CCO}	65% V_{CCO}	V_{CCO} + 0.300	0.450	V_{CCO} – 0.450	Note 5	Note 5
LVCMOS18	–0.300	35% V_{CCO}	65% V_{CCO}	V_{CCO} + 0.300	0.450	V_{CCO} – 0.450	Note 5	Note 5
LVDCI_15	–0.300	35% V_{CCO}	65% V_{CCO}	V_{CCO} + 0.300	0.450	V_{CCO} – 0.450	7.0	–7.0
LVDCI_18	–0.300	35% V_{CCO}	65% V_{CCO}	V_{CCO} + 0.300	0.450	V_{CCO} – 0.450	7.0	–7.0
SSTL12	–0.300	V_{REF} – 0.100	V_{REF} + 0.100	V_{CCO} + 0.300	$V_{CCO}/2$ – 0.150	$V_{CCO}/2$ + 0.150	8.0	–8.0
SSTL135	–0.300	V_{REF} – 0.090	V_{REF} + 0.090	V_{CCO} + 0.300	$V_{CCO}/2$ – 0.150	$V_{CCO}/2$ + 0.150	9.0	–9.0
SSTL15	–0.300	V_{REF} – 0.100	V_{REF} + 0.100	V_{CCO} + 0.300	$V_{CCO}/2$ – 0.175	$V_{CCO}/2$ + 0.175	10.0	–10.0
SSTL18_I	–0.300	V_{REF} – 0.125	V_{REF} + 0.125	V_{CCO} + 0.300	$V_{CCO}/2$ – 0.470	$V_{CCO}/2$ + 0.470	7.0	–7.0
MIPI_DPHY_ DCI_LP[6]	–0.300	0.550	0.880	V_{CCO} + 0.300	0.050	1.100	0.01	–0.01

Notes:

1. Tested according to relevant specifications.
2. Standards specified using the default I/O standard configuration. For details, see the *UltraScale Architecture SelectIO Resources User Guide* (UG571).
3. POD10 and POD12 DC input and output levels are shown in Table 11, Table 16, and Table 17.
4. Supported drive strengths of 2, 4, 6, or 8 mA in HP I/O banks.
5. Supported drive strengths of 2, 4, 6, 8, or 12 mA in HP I/O banks.
6. Low-power option for MIPI_DPHY_DCI.

Table 11: **DC Input Levels for Single-ended POD10 and POD12 I/O Standards**

I/O Standard[1, 2]	V_{IL}		V_{IH}	
	V, Min	V, Max	V, Min	V, Max
POD10	–0.300	V_{REF} – 0.068	V_{REF} + 0.068	V_{CCO} + 0.300
POD12	–0.300	V_{REF} – 0.068	V_{REF} + 0.068	V_{CCO} + 0.300

Notes:

1. Tested according to relevant specifications.
2. Standards specified using the default I/O standard configuration. For details, see the *UltraScale Architecture SelectIO Resources User Guide* (UG571).

Table 12: **Differential SelectIO DC Input and Output Levels**

I/O Standard	V_{ICM} (V)[1]			V_{ID} (V)[2]			V_{ILHS}[3]	V_{IHHS}[3]	V_{OCM} (V)[4]			V_{OD} (V)[5]		
	Min	Typ	Max	Min	Typ	Max	Min	Max	Min	Typ	Max	Min	Typ	Max
SUB_LVDS[8]	0.500	0.900	1.300	0.070	–	–	–	–	0.700	0.900	1.100	0.100	0.150	0.200
LVPECL	0.300	1.200	1.425	0.100	0.350	0.600	–	–	–	–	–	–	–	–
SLVS_400_18	0.070	0.200	0.330	0.140	–	0.450	–	–	–	–	–	–	–	–
SLVS_400_25	0.070	0.200	0.330	0.140	–	0.450	–	–	–	–	–	–	–	–
MIPI_DPHY_ DCI_HS[9]	0.070	–	0.330	0.070	–	–	–0.040	0.460	0.150	0.200	0.250	0.140	0.200	0.270

Notes:

1. V_{ICM} is the input common mode voltage.
2. V_{ID} is the input differential voltage ($Q - \overline{Q}$).
3. V_{IHHS} and V_{ILHS} are the single-ended input high and low voltages, respectively.
4. V_{OCM} is the output common mode voltage.
5. V_{OD} is the output differential voltage ($Q - \overline{Q}$).
6. LVDS_25 is specified in Table 18.
7. LVDS is specified in Table 19.
8. Only the SUB_LVDS receiver is supported in HD I/O banks.
9. High-speed option for MIPI_DPHY_DCI. The V_{ID} maximum is aligned with the standard's specification. A higher V_{ID} is acceptable as long as the V_{IN} specification is also met.

Table 13: **Complementary Differential SelectIO DC Input and Output Levels for HD I/O Banks**

I/O Standard	V_{ICM} (V)[1]			V_{ID} (V)[2]		V_{OL} (V)[3]	V_{OH} (V)[4]	I_{OL}	I_{OH}
	Min	Typ	Max	Min	Max	Max	Min	mA	mA
DIFF_HSTL_I	0.300	0.750	1.125	0.100	–	0.400	V_{CCO} – 0.400	8.0	–8.0
DIFF_HSTL_I_18	0.300	0.900	1.425	0.100	–	0.400	V_{CCO} – 0.400	8.0	–8.0
DIFF_HSUL_12	0.300	0.600	0.850	0.100	–	20% V_{CCO}	80% V_{CCO}	0.1	–0.1
DIFF_SSTL12	0.300	0.600	0.850	0.100	–	(V_{CCO}/2) – 0.150	(V_{CCO}/2) + 0.150	14.25	–14.25
DIFF_SSTL135	0.300	0.675	1.000	0.100	–	(V_{CCO}/2) – 0.150	(V_{CCO}/2) + 0.150	8.9	–8.9
DIFF_SSTL135_II	0.300	0.675	1.000	0.100	–	(V_{CCO}/2) – 0.150	(V_{CCO}/2) + 0.150	13.0	–13.0
DIFF_SSTL15	0.300	0.750	1.125	0.100	–	(V_{CCO}/2) – 0.175	(V_{CCO}/2) + 0.175	8.9	–8.9
DIFF_SSTL15_II	0.300	0.750	1.125	0.100	–	(V_{CCO}/2) – 0.175	(V_{CCO}/2) + 0.175	13.0	–13.0
DIFF_SSTL18_I	0.300	0.900	1.425	0.100	–	(V_{CCO}/2) – 0.470	(V_{CCO}/2) + 0.470	8.0	–8.0
DIFF_SSTL18_II	0.300	0.900	1.425	0.100	–	(V_{CCO}/2) – 0.600	(V_{CCO}/2) + 0.600	13.4	–13.4

Notes:

1. V_{ICM} is the input common mode voltage.
2. V_{ID} is the input differential voltage.
3. V_{OL} is the single-ended low-output voltage.
4. V_{OH} is the single-ended high-output voltage.

Table 14: **Complementary Differential SelectIO DC Input and Output Levels for HP I/O Banks**

I/O Standard[1]	V_{ICM} (V)[2]			V_{ID} (V)[3]		V_{OL} (V)[4]	V_{OH} (V)[5]	I_{OL}	I_{OH}
	Min	Typ	Max	Min	Max	Max	Min	mA	mA
DIFF_HSTL_I	0.680	$V_{CCO}/2$	$(V_{CCO}/2) + 0.150$	0.100	–	0.400	$V_{CCO} - 0.400$	5.8	–5.8
DIFF_HSTL_I_12	0.400 x V_{CCO}	$V_{CCO}/2$	0.600 x V_{CCO}	0.100	–	0.250 x V_{CCO}	0.750 x V_{CCO}	4.1	–4.1
DIFF_HSTL_I_18	$(V_{CCO}/2) - 0.175$	$V_{CCO}/2$	$(V_{CCO}/2) + 0.175$	0.100	–	0.400	$V_{CCO} - 0.400$	6.2	–6.2
DIFF_HSUL_12	$(V_{CCO}/2) - 0.120$	$V_{CCO}/2$	$(V_{CCO}/2) + 0.120$	0.100	–	20% V_{CCO}	80% V_{CCO}	0.1	–0.1
DIFF_SSTL12	$(V_{CCO}/2) - 0.150$	$V_{CCO}/2$	$(V_{CCO}/2) + 0.150$	0.100	–	$(V_{CCO}/2) - 0.150$	$(V_{CCO}/2) + 0.150$	8.0	–8.0
DIFF_SSTL135	$(V_{CCO}/2) - 0.150$	$V_{CCO}/2$	$(V_{CCO}/2) + 0.150$	0.100	–	$(V_{CCO}/2) - 0.150$	$(V_{CCO}/2) + 0.150$	9.0	–9.0
DIFF_SSTL15	$(V_{CCO}/2) - 0.175$	$V_{CCO}/2$	$(V_{CCO}/2) + 0.175$	0.100	–	$(V_{CCO}/2) - 0.175$	$(V_{CCO}/2) + 0.175$	10.0	–10.0
DIFF_SSTL18_I	$(V_{CCO}/2) - 0.175$	$V_{CCO}/2$	$(V_{CCO}/2) + 0.175$	0.100	–	$(V_{CCO}/2) - 0.470$	$(V_{CCO}/2) + 0.470$	7.0	–7.0

Notes:
1. DIFF_POD10 and DIFF_POD12 HP I/O bank specifications are shown in Table 15, Table 16, Table 17.
2. V_{ICM} is the input common mode voltage.
3. V_{ID} is the input differential voltage.
4. V_{OL} is the single-ended low-output voltage.
5. V_{OH} is the single-ended high-output voltage.

Table 15: **DC Input Levels for Differential POD10 and POD12 I/O Standards**

I/O Standard[1, 2]	V_{ICM} (V)			V_{ID} (V)	
	Min	Typ	Max	Min	Max
DIFF_POD10	0.63	0.70	0.77	0.14	–
DIFF_POD12	0.76	0.84	0.92	0.16	–

Notes:
1. Tested according to relevant specifications.
2. Standards specified using the default I/O standard configuration. For details, see the *UltraScale Architecture SelectIO Resources User Guide* (UG571).

Table 16: **DC Output Levels for Single-ended and Differential POD10 and POD12 Standards**

Symbol	Description[1, 2]	V_{OUT}	Min	Typ	Max	Units
R_{OL}	Pull-down resistance	V_{OM_DC} (as described in Table 17)	36	40	44	Ω
R_{OH}	Pull-up resistance	V_{OM_DC} (as described in Table 17)	36	40	44	Ω

Notes:
1. Tested according to relevant specifications.
2. Standards specified using the default I/O standard configuration. For details, see the *UltraScale Architecture SelectIO Resources User Guide* (UG571).

Table 17: **Definitions for DC Output Levels for Single-ended and Differential POD10 and POD12 Standards**

Symbol	Description	All Speed Grades	Units
V_{OM_DC}	DC output Mid measurement level (for IV curve linearity)	0.8 x V_{CCO}	V

LVDS DC Specifications (LVDS_25)

The LVDS_25 standard is available in the HD I/O banks. See the *UltraScale Architecture SelectIO Resources User Guide* (UG571) for more information.

Table 18: **LVDS_25 DC Specifications**

Symbol	DC Parameter	Min	Typ	Max	Units
V_{CCO}[1]	Supply voltage	2.375	2.500	2.625	V
V_{IDIFF}	Differential input voltage: (Q – $\overline{Q}$), Q = High ($\overline{Q}$ – Q), $\overline{Q}$ = High	100	350	600[2]	mV
V_{ICM}	Input common-mode voltage	0.300	1.200	1.425	V

Notes:

1. LVDS_25 in HD I/O banks supports inputs only. LVDS_25 inputs without internal termination have no V_{CCO} requirements. Any V_{CCO} can be chosen as long as the input voltage levels do not violate the *Recommended Operating Condition* (Table 2) specification for the V_{IN} I/O pin voltage.
2. Maximum V_{IDIFF} value is specified for the maximum V_{ICM} specification. With a lower V_{ICM}, a higher V_{DIFF} is tolerated only when the recommended operating conditions and overshoot/undershoot V_{IN} specifications are maintained.

LVDS DC Specifications (LVDS)

The LVDS standard is available in the HP I/O banks. See the *UltraScale Architecture SelectIO Resources User Guide* (UG571) for more information.

Table 19: **LVDS DC Specifications**

Symbol	DC Parameter	Conditions	Min	Typ	Max	Units
V_{CCO}[1]	Supply voltage		1.710	1.800	1.890	V
V_{ODIFF}[2]	Differential output voltage: (Q – $\overline{Q}$), Q = High ($\overline{Q}$ – Q), $\overline{Q}$ = High	R_T = 100Ω across Q and $\overline{Q}$ signals	247	350	454	mV
V_{OCM}[2]	Output common-mode voltage	R_T = 100Ω across Q and $\overline{Q}$ signals	1.000	1.250	1.425	V
V_{IDIFF}[3]	Differential input voltage: (Q – $\overline{Q}$), Q = High ($\overline{Q}$ – Q), $\overline{Q}$ = High		100	350	600[3]	mV
V_{ICM_DC}[4]	Input common-mode voltage (DC coupling)		0.300	1.200	1.425	V
V_{ICM_AC}[5]	Input common-mode voltage (AC coupling)		0.600	–	1.100	V

Notes:

1. In HP I/O banks, when LVDS is used with input-only functionality, it can be placed in a bank where the V_{CCO} levels are different from the specified level only if internal differential termination is not used. In this scenario, V_{CCO} must be chosen to ensure the input pin voltage levels do not violate the Recommended Operating Condition (Table 2) specification for the V_{IN} I/O pin voltage.
2. V_{OCM} and V_{ODIFF} values are for LVDS_PRE_EMPHASIS = FALSE.
3. Maximum V_{IDIFF} value is specified for the maximum V_{ICM} specification. With a lower V_{ICM}, a higher V_{DIFF} is tolerated only when the recommended operating conditions and overshoot/undershoot V_{IN} specifications are maintained.
4. Input common mode voltage for DC coupled configurations. EQUALIZATION = EQ_NONE (Default).
5. External input common mode voltage specification for AC coupled configurations. EQUALIZATION = EQ_LEVEL0, EQ_LEVEL1, EQ_LEVEL2, EQ_LEVEL3, EQ_LEVEL4.

AC Switching Characteristics

All values represented in this data sheet are based on the speed specifications in the Vivado® Design Suite as outlined in the following table.

Table 20: **Speed Specification Version By Device**

2019.2.2	Device
1.27	XCVU3P, XCVU7P, XCVU9P, XCVU5P, XCVU11P, XCVU13P, XCVU31P, XCVU33P, XCVU35P, XCVU37P, XCVU45P, XCVU47P XQVU3P, XQVU7P, XQVU11P
1.29	XCVU19P, XCVU27P, XCVU29P

Switching characteristics are specified on a per-speed-grade basis and can be designated as Advance, Preliminary, or Production. Each designation is defined as follows:

- **Advance Product Specification:** These specifications are based on simulations only and are typically available soon after device design specifications are frozen. Although speed grades with this designation are considered relatively stable and conservative, some under-reporting might still occur.
- **Preliminary Product Specification:** These specifications are based on complete ES (engineering sample) silicon characterization. Devices and speed grades with this designation are intended to give a better indication of the expected performance of production silicon. The probability of under-reporting delays is greatly reduced as compared to Advance data.
- **Product Specification:** These specifications are released once enough production silicon of a particular device family member has been characterized to provide full correlation between specifications and devices over numerous production lots. There is no under-reporting of delays, and customers receive formal notification of any subsequent changes. Typically, the slowest speed grades transition to production before faster speed grades.

Testing of AC Switching Characteristics

Internal timing parameters are derived from measuring internal test patterns. All AC switching characteristics are representative of worst-case supply voltage and junction temperature conditions.

For more specific, more precise, and worst-case guaranteed data, use the values reported by the static timing analyzer and back-annotate to the simulation net list. Unless otherwise noted, values apply to all Virtex UltraScale+ FPGAs.

Speed Grade Designations

Because individual family members are produced at different times, the migration from one category to another depends completely on the status of the fabrication process for each device. Table 21 correlates the current status of the Virtex UltraScale+ FPGA on a per speed grade basis.

Table 21: **Speed Grade Designations by Device**

Device	Speed Grade, Temperature Ranges, and V_{CCINT} Operating Voltages		
	Advance	**Preliminary**	**Production**
XCVU3P			-3E (V_{CCINT} = 0.90V) -2E (V_{CCINT} = 0.85V), -2I (V_{CCINT} = 0.85V) -1E (V_{CCINT} = 0.85V), -1I (V_{CCINT} = 0.85V) -2LE (V_{CCINT} = 0.85V), -2LE (V_{CCINT} = 0.72V)[1]
XCVU5P			-3E (V_{CCINT} = 0.90V) -2E (V_{CCINT} = 0.85V), -2I (V_{CCINT} = 0.85V) -1E (V_{CCINT} = 0.85V), -1I (V_{CCINT} = 0.85V) -2LE (V_{CCINT} = 0.85V), -2LE (V_{CCINT} = 0.72V)[1]
XCVU7P			-3E (V_{CCINT} = 0.90V) -2E (V_{CCINT} = 0.85V), -2I (V_{CCINT} = 0.85V) -1E (V_{CCINT} = 0.85V), -1I (V_{CCINT} = 0.85V) -2LE (V_{CCINT} = 0.85V), -2LE (V_{CCINT} = 0.72V)[1]
XCVU9P			-3E (V_{CCINT} = 0.90V) -2E (V_{CCINT} = 0.85V), -2I (V_{CCINT} = 0.85V) -1E (V_{CCINT} = 0.85V), -1I (V_{CCINT} = 0.85V) -2LE (V_{CCINT} = 0.85V), -2LE (V_{CCINT} = 0.72V)[1]
XCVU11P			-3E (V_{CCINT} = 0.90V) -2E (V_{CCINT} = 0.85V), -2I (V_{CCINT} = 0.85V) -1E (V_{CCINT} = 0.85V), -1I (V_{CCINT} = 0.85V) -2LE (V_{CCINT} = 0.85V), -2LE (V_{CCINT} = 0.72V)[1]
XCVU13P			-3E (V_{CCINT} = 0.90V) -2E (V_{CCINT} = 0.85V), -2I (V_{CCINT} = 0.85V) -1E (V_{CCINT} = 0.85V), -1I (V_{CCINT} = 0.85V) -2LE (V_{CCINT} = 0.85V), -2LE (V_{CCINT} = 0.72V)[1]
XCVU19P	-2E (V_{CCINT} = 0.85V) -1E (V_{CCINT} = 0.85V)		
XCVU27P			-3E (V_{CCINT} = 0.90V) -2E (V_{CCINT} = 0.85V), -2I (V_{CCINT} = 0.85V) -1E (V_{CCINT} = 0.85V), -1I (V_{CCINT} = 0.85V) -2LE (V_{CCINT} = 0.85V), -2LE (V_{CCINT} = 0.72V)[1]
XCVU29P			-3E (V_{CCINT} = 0.90V) -2E (V_{CCINT} = 0.85V), -2I (V_{CCINT} = 0.85V) -1E (V_{CCINT} = 0.85V), -1I (V_{CCINT} = 0.85V) -2LE (V_{CCINT} = 0.85V), -2LE (V_{CCINT} = 0.72V)[1]
XCVU31P			-3E (V_{CCINT} = 0.90V) -2E (V_{CCINT} = 0.85V) -2LE (V_{CCINT} = 0.85V) -1E (V_{CCINT} = 0.85V) -2LE (V_{CCINT} = 0.72V)[1]
XCVU33P			-3E (V_{CCINT} = 0.90V) -2E (V_{CCINT} = 0.85V) -2LE (V_{CCINT} = 0.85V) -1E (V_{CCINT} = 0.85V) -2LE (V_{CCINT} = 0.72V)[1]

Table 21: **Speed Grade Designations by Device** *(cont'd)*

Device	Speed Grade, Temperature Ranges, and V_{CCINT} Operating Voltages		
	Advance	Preliminary	Production
XCVU35P			-3E (V_{CCINT} = 0.90V) -2E (V_{CCINT} = 0.85V) -2LE (V_{CCINT} = 0.85V) -1E (V_{CCINT} = 0.85V) -2LE (V_{CCINT} = 0.72V)[1]
XCVU37P			-3E (V_{CCINT} = 0.90V) -2E (V_{CCINT} = 0.85V) -2LE (V_{CCINT} = 0.85V) -1E (V_{CCINT} = 0.85V) -2LE (V_{CCINT} = 0.72V)[1]
XCVU45P			-3E (V_{CCINT} = 0.90V) -2E (V_{CCINT} = 0.85V) -2LE (V_{CCINT} = 0.85V) -1E (V_{CCINT} = 0.85V) -2LE (V_{CCINT} = 0.72V)[1]
XCVU47P			-3E (V_{CCINT} = 0.90V) -2E (V_{CCINT} = 0.85V) -2LE (V_{CCINT} = 0.85V) -1E (V_{CCINT} = 0.85V) -2LE (V_{CCINT} = 0.72V)[1]
XQVU3P			-2I (V_{CCINT} = 0.85V) -1I (V_{CCINT} = 0.85V), -1M (V_{CCINT} = 0.85V) -2LE (V_{CCINT} = 0.85V), -2LE (V_{CCINT} = 0.72V)[1]
XQVU7P			-2I (V_{CCINT} = 0.85V) -1I (V_{CCINT} = 0.85V) -2LE (V_{CCINT} = 0.85V), -2LE (V_{CCINT} = 0.72V)[1]
XQVU11P			-2I (V_{CCINT} = 0.85V) -1I (V_{CCINT} = 0.85V) -2LE (V_{CCINT} = 0.85V), -2LE (V_{CCINT} = 0.72V)[1]

Notes:

1. The lowest power -2L devices, where V_{CCINT} = 0.72V, are listed in the Vivado Design Suite as -2LV.

Production Silicon and Software Status

In some cases, a particular family member (and speed grade) is released to production before a speed specification is released with the correct label (Advance, Preliminary, Production). Any labeling discrepancies are corrected in subsequent speed specification releases.

Table 22 lists the production released Virtex UltraScale+ FPGA, speed grade, and the minimum corresponding supported speed specification version and Vivado software revisions. The Vivado software and speed specifications listed are the minimum releases required for production. All subsequent releases of software and speed specifications are valid.

Table 22: **Virtex UltraScale+ FPGA Device Production Software and Speed Specification Release**

Device	Speed Grade and V_{CCINT} Operating Voltages[1]				
	0.90V	0.85V			0.72V
	-3	-2	-1	-2L	-2L
XCVU3P	Vivado tools 2018.1 v1.19	Vivado tools 2017.1 v1.10		Vivado tools 2017.3.1 v1.16	
XCVU5P	Vivado tools 2018.1 v1.19	Vivado tools 2017.2 v1.12		Vivado tools 2017.3.1 v1.16	
XCVU7P	Vivado tools 2018.1 v1.19	Vivado tools 2017.2 v1.12		Vivado tools 2017.3.1 v1.16	
XCVU9P	Vivado tools 2018.1 v1.19	Vivado tools 2017.2 v1.12		Vivado tools 2017.3.1 v1.16	
XCVU11P	Vivado tools 2017.4.1 v1.18	Vivado tools 2017.2.1 v1.13		Vivado tools 2017.3.1 v1.16	
XCVU13P	Vivado tools 2017.4.1 v1.18	Vivado tools 2017.2.1 v1.13		Vivado tools 2017.3.1 v1.16	
XCVU19P	N/A			N/A	N/A
XCVU27P	Vivado tools 2019.2 v1.28	Vivado tools 2019.1.3 v1.27		Vivado tools 2019.2 v1.28	
XCVU29P	Vivado tools 2019.2 v1.28	Vivado tools 2019.1.3 v1.27		Vivado tools 2019.2 v1.28	
XCVU31P	Vivado tools 2019.1 v1.25	Vivado tools 2018.3.1 v1.24		Vivado tools 2018.3.1 v1.24	
XCVU33P	Vivado tools 2019.1 v1.25	Vivado tools 2018.3.1 v1.24		Vivado tools 2018.3.1 v1.24	
XCVU35P	Vivado tools 2019.1 v1.25	Vivado tools 2018.3.1 v1.24		Vivado tools 2018.3.1 v1.24	
XCVU37P	Vivado tools 2019.1 v1.25	Vivado tools 2018.3.1 v1.24		Vivado tools 2018.3.1 v1.24	
XCVU45P	Vivado tools 2019.1 v1.25	Vivado tools 2019.1 v1.25		Vivado tools 2019.1 v1.25	
XCVU47P	Vivado tools 2019.1 v1.25	Vivado tools 2019.1 v1.25		Vivado tools 2019.1 v1.25	
XQVU3P	N/A	Vivado tools 2018.3 v1.23		Vivado tools 2018.3 v1.23	
XQVU7P	N/A	Vivado tools 2018.3.1 v1.23		Vivado tools 2018.3.1 v1.23	
XQVU11P	N/A	Vivado tools 2018.3.1 v1.23		Vivado tools 2018.3.1 v1.23	

Notes:

1. Blank entries indicate a device and/or speed grade in Advance or Preliminary status.

FPGA Logic Performance Characteristics

This section provides the performance characteristics of some common functions and designs implemented in the Virtex UltraScale+ FPGAs. These values are subject to the same guidelines as the AC Switching Characteristics section.

In each of the following LVDS performance tables, the I/O bank type is either high performance (HP) or high density (HD).

In LVDS component mode:

- For the input/output registers in HP I/O banks, the Vivado tools limit clock frequencies to 312.9 MHz for all speed grades.
- For IDDR in HP I/O banks, Vivado tools limit clock frequencies to 625.0 MHz for all speed grades.
- For ODDR in HP I/O banks, Vivado tools limit clock frequencies to 625.0 MHz for all speed grades.

Table 23: **LVDS Component Mode Performance**

Description	I/O Bank Type	Speed Grade and V_{CCINT} Operating Voltages								Units
		0.90V		0.85V				0.72V		
		-3		-2		-1		-2		
		Min	Max	Min	Max	Min	Max	Min	Max	
LVDS TX DDR (OSERDES 4:1, 8:1)	HP	0	1250	0	1250	0	1250	0	1250	Mb/s
LVDS TX SDR (OSERDES 2:1, 4:1)	HP	0	625	0	625	0	625	0	625	Mb/s
LVDS RX DDR (ISERDES 1:4, 1:8)[1]	HP	0	1250	0	1250	0	1250	0	1250	Mb/s
LVDS RX DDR	HD	0	250	0	250	0	250	0	250	Mb/s
LVDS RX SDR (ISERDES 1:2, 1:4)[1]	HP	0	625	0	625	0	625	0	625	Mb/s
LVDS RX SDR	HD	0	125	0	125	0	125	0	125	Mb/s

Notes:

1. LVDS receivers are typically bounded with certain applications to achieve maximum performance. Package skews are not included and should be removed through PCB routing.

Table 24: **LVDS Native Mode Performance**

Description[1, 2]	DATA_WIDTH	I/O Bank Type	Speed Grade and V_{CCINT} Operating Voltages								Units
			0.90V		0.85V				0.72V		
			-3		-2		-1		-2		
			Min	Max	Min	Max	Min	Max	Min	Max	
LVDS TX DDR (TX_BITSLICE)	4	HP	375	1600	375	1600	375	1600	375	1400	Mb/s
	8		375	1600	375	1600	375	1600	375	1600	Mb/s
LVDS TX SDR (TX_BITSLICE)	4	HP	187.5	800	187.5	800	187.5	800	187.5	700	Mb/s
	8		187.5	800	187.5	800	187.5	800	187.5	800	Mb/s
LVDS RX DDR (RX_BITSLICE)[3]	4	HP	375	1600[4]	375	1600[4]	375	1600[4]	375	1400[4]	Mb/s
	8		375	1600[4]	375	1600[4]	375	1600[4]	375	1600[4]	Mb/s
LVDS RX SDR (RX_BITSLICE)[3]	4	HP	187.5	800	187.5	800	187.5	800	187.5	700	Mb/s
	8		187.5	800	187.5	800	187.5	800	187.5	800	Mb/s

Notes:

1. Native mode is supported through the High-Speed SelectIO Interface Wizard available with the Vivado Design Suite. The performance values assume a source-synchronous interface.
2. PLL settings can restrict the minimum allowable data rate. For example, when using the PLL with CLKOUTPHY_MODE = VCO_HALF the minimum frequency is PLL_F_{VCOMIN}/2.
3. LVDS receivers are typically bounded with certain applications to achieve maximum performance. Package skews are not included and should be removed through PCB routing.
4. Asynchronous receiver performance is limited to 1300 Mb/s for -3/-2 speed grades and to 1250 Mb/s for -1 speed grades.

Table 25: **MIPI D-PHY Performance**

Description	I/O Bank Type	Speed Grade and V_{CCINT} Operating Voltages				Units
		0.90V	0.85V		0.72V	
		-3	-2	-1	-2	
MIPI D-PHY transmitter or receiver	HP	1500	1500	1260	1260	Mb/s

Table 26: **LVDS Native-Mode 1000BASE-X Support**

Description[1]	I/O Bank Type	Speed Grade and V_{CCINT} Operating Voltages			
		0.90V	0.85V		0.72V
		-3	-2	-1	-2
1000BASE-X	HP	Yes			

Notes:

1. 1000BASE-X support is based on the *IEEE Standard for CSMA/CD Access Method and Physical Layer Specifications* (IEEE Std 802.3-2008).

The following table provides the maximum data rates for applicable memory standards using the Virtex UltraScale+ FPGA memory PHY. Refer to Memory Interfaces for the complete list of memory interface standards supported and detailed specifications. The final performance of the memory interface is determined through a complete design implemented in the Vivado Design Suite, following guidelines in the *UltraScale Architecture PCB Design User Guide* (UG583), electrical analysis, and characterization of the system.

Table 27: **Maximum Physical Interface (PHY) Rate for Memory Interfaces**

Memory Standard	DRAM Type	Speed Grade and V_{CCINT} Operating Voltages				Units
		0.90V	0.85V		0.72V	
		-3	-2	-1	-2	
DDR4	Single rank component	2666	2666	2400	2400	Mb/s
	1 rank DIMM[1, 2, 3]	2400	2400	2133	2133	Mb/s
	2 rank DIMM[1, 4]	2133	2133	1866	1866	Mb/s
	4 rank DIMM[1, 5]	1600	1600	1333	1333	Mb/s
DDR3	Single rank component	2133	2133	2133	2133	Mb/s
	1 rank DIMM[1, 2]	1866	1866	1866	1866	Mb/s
	2 rank DIMM[1, 4]	1600	1600	1600	1600	Mb/s
	4 rank DIMM[1, 5]	1066	1066	1066	1066	Mb/s
DDR3L	Single rank component	1866	1866	1866	1866	Mb/s
	1 rank DIMM[1, 2]	1600	1600	1600	1600	Mb/s
	2 rank DIMM[1, 4]	1333	1333	1333	1333	Mb/s
	4 rank DIMM[1, 5]	800	800	800	800	Mb/s
QDR II+	Single rank component[6]	633	633	600	600	MHz
RLDRAM 3	Single rank component	1200	1200	1066	1066	MHz
QDR IV XP	Single rank component	1066	1066	1066	933	MHz

Table 27: **Maximum Physical Interface (PHY) Rate for Memory Interfaces** *(cont'd)*

Memory Standard	DRAM Type	Speed Grade and V_{CCINT} Operating Voltages				Units
		0.90V	0.85V		0.72V	
		-3	-2	-1	-2	
LPDDR3	Single rank component	1600	1600	1600	1600	Mb/s

Notes:

1. Dual in-line memory module (DIMM) includes RDIMM, SODIMM, UDIMM, and LRDIMM.
2. Includes: 1 rank 1 slot, DDP 2 rank, LRDIMM 2 or 4 rank 1 slot.
3. For the DDR4 DDP components at -3 and -2 (V_{CCINT} = 0.85V) speed grades, the maximum data rate is 2133 Mb/s for six or more DDP devices. For five or less DDP devices, use the single rank DIMM data rates for the -3 and -2 (V_{CCINT} = 0.85V) speed grades.
4. Includes: 2 rank 1 slot, 1 rank 2 slot, LRDIMM 2 rank 2 slot.
5. Includes: 2 rank 2 slot, 4 rank 1 slot.
6. The QDRII+ performance specifications are for burst-length 4 (BL = 4) implementations.

FPGA Logic Switching Characteristics

The following IOB high-density (HD) and IOB high-performance (HP) tables summarize the values of standard-specific data input delay adjustments, output delays terminating at pads (based on standard) and 3-state delays.

- $T_{INBUF_DELAY_PAD_I}$ is the delay from IOB pad through the input buffer to the I-pin of an IOB pad. The delay varies depending on the capability of the SelectIO input buffer.
- $T_{OUTBUF_DELAY_O_PAD}$ is the delay from the O pin to the IOB pad through the output buffer of an IOB pad. The delay varies depending on the capability of the SelectIO output buffer.
- $T_{OUTBUF_DELAY_TD_PAD}$ is the delay from the T pin to the IOB pad through the output buffer of an IOB pad, when 3-state is disabled. The delay varies depending on the SelectIO capability of the output buffer. In HP I/O banks, the internal DCI termination turn-on time is always faster than $T_{OUTBUF_DELAY_TD_PAD}$ when the DCITERMDISABLE pin is used. In HD I/O banks, the on-die termination turn-on time is always faster than $T_{OUTBUF_DELAY_TD_PAD}$ when the INTERMDISABLE pin is used.

IOB High Density (HD) Switching Characteristics

Table 28: **IOB High Density (HD) Switching Characteristics**

I/O Standards	$T_{INBUF_DELAY_PAD_I}$				$T_{OUTBUF_DELAY_O_PAD}$				$T_{OUTBUF_DELAY_TD_PAD}$				Units
	0.90V	0.85V		0.72V	0.90V	0.85V		0.72V	0.90V	0.85V		0.72V	
	-3	-2	-1	-2	-3	-2	-1	-2	-3	-2	-1	-2	
DIFF_HSTL_I_18_F	0.873	0.978	1.058	0.978	1.510	1.574	1.718	1.966	1.160	1.160	1.271	1.515	ns
DIFF_HSTL_I_18_S	0.873	0.978	1.058	0.978	1.742	1.805	1.950	2.197	1.748	1.748	1.867	2.103	ns
DIFF_HSTL_I_F	0.873	0.978	1.058	0.978	1.563	1.611	1.762	2.003	1.313	1.313	1.417	1.668	ns
DIFF_HSTL_I_S	0.873	0.978	1.058	0.978	1.696	1.798	1.913	2.190	1.630	1.630	1.780	1.985	ns
DIFF_HSUL_12_F	0.796	0.911	0.977	0.911	1.493	1.573	1.703	1.965	1.222	1.222	1.335	1.577	ns
DIFF_HSUL_12_S	0.796	0.911	0.977	0.911	1.653	1.711	1.864	2.103	1.536	1.536	1.665	1.891	ns
DIFF_SSTL12_F	0.796	0.906	0.977	0.906	1.577	1.643	1.792	2.035	1.285	1.285	1.423	1.640	ns
DIFF_SSTL12_S	0.796	0.906	0.977	0.906	1.726	1.784	1.948	2.176	1.567	1.567	1.706	1.922	ns
DIFF_SSTL135_F	0.807	0.927	0.995	0.927	1.558	1.625	1.765	2.017	1.341	1.341	1.458	1.696	ns

Table 28: **IOB High Density (HD) Switching Characteristics** *(cont'd)*

I/O Standards	$T_{INBUF_DELAY_PAD_I}$				$T_{OUTBUF_DELAY_O_PAD}$				$T_{OUTBUF_DELAY_TD_PAD}$				Units
	0.90V	0.85V		0.72V	0.90V	0.85V		0.72V	0.90V	0.85V		0.72V	
	-3	-2	-1	-2	-3	-2	-1	-2	-3	-2	-1	-2	
DIFF_SSTL135_II_F	0.807	0.927	0.995	0.927	1.560	1.623	1.770	2.015	1.325	1.325	1.470	1.680	ns
DIFF_SSTL135_II_S	0.807	0.927	0.995	0.927	1.694	1.768	1.916	2.160	1.722	1.722	1.911	2.077	ns
DIFF_SSTL135_S	0.807	0.927	0.995	0.927	1.796	1.869	2.025	2.261	1.814	1.814	1.976	2.169	ns
DIFF_SSTL15_F	0.840	0.928	1.020	0.928	1.559	1.628	1.771	2.020	1.374	1.374	1.483	1.729	ns
DIFF_SSTL15_II_F	0.840	0.928	1.020	0.928	1.574	1.622	1.778	2.014	1.356	1.356	1.442	1.711	ns
DIFF_SSTL15_II_S	0.840	0.928	1.020	0.928	1.769	1.821	1.987	2.213	1.895	1.895	2.047	2.250	ns
DIFF_SSTL15_S	0.840	0.928	1.020	0.928	1.752	1.824	1.977	2.216	1.743	1.743	1.907	2.098	ns
DIFF_SSTL18_II_F	0.873	0.961	1.038	0.961	1.672	1.729	1.880	2.121	1.377	1.377	1.492	1.732	ns
DIFF_SSTL18_II_S	0.873	0.961	1.038	0.961	1.748	1.796	1.965	2.188	1.616	1.616	1.800	1.971	ns
DIFF_SSTL18_I_F	0.873	0.961	1.038	0.961	1.539	1.609	1.755	2.001	1.220	1.220	1.313	1.575	ns
DIFF_SSTL18_I_S	0.873	0.961	1.038	0.961	1.728	1.786	1.942	2.178	1.677	1.677	1.836	2.032	ns
HSTL_I_18_F	0.854	0.947	1.021	0.947	1.510	1.574	1.718	1.966	1.160	1.160	1.271	1.515	ns
HSTL_I_18_S	0.854	0.947	1.021	0.947	1.742	1.805	1.950	2.197	1.748	1.748	1.867	2.103	ns
HSTL_I_F	0.748	0.856	0.900	0.856	1.563	1.611	1.762	2.003	1.313	1.313	1.417	1.668	ns
HSTL_I_S	0.748	0.856	0.900	0.856	1.696	1.798	1.913	2.190	1.630	1.630	1.780	1.985	ns
HSUL_12_F	0.712	0.780	0.867	0.780	1.493	1.573	1.703	1.965	1.222	1.222	1.335	1.577	ns
HSUL_12_S	0.712	0.780	0.867	0.780	1.653	1.711	1.864	2.103	1.536	1.536	1.665	1.891	ns
LVCMOS12_F_12	0.761	0.918	0.976	0.918	1.652	1.689	1.856	2.081	1.202	1.202	1.317	1.557	ns
LVCMOS12_F_4	0.761	0.918	0.976	0.918	1.714	1.742	1.922	2.134	1.353	1.353	1.478	1.708	ns
LVCMOS12_F_8	0.761	0.918	0.976	0.918	1.668	1.714	1.879	2.106	1.292	1.292	1.432	1.647	ns
LVCMOS12_S_12	0.761	0.918	0.976	0.918	2.019	2.073	2.247	2.465	1.581	1.581	1.717	1.936	ns
LVCMOS12_S_4	0.761	0.918	0.976	0.918	1.979	1.979	2.182	2.371	1.633	1.633	1.772	1.988	ns
LVCMOS12_S_8	0.761	0.918	0.976	0.918	2.132	2.205	2.406	2.597	1.767	1.767	1.928	2.122	ns
LVCMOS15_F_12	0.775	0.905	0.958	0.905	1.691	1.713	1.892	2.105	1.275	1.275	1.428	1.630	ns
LVCMOS15_F_16	0.775	0.905	0.958	0.905	1.665	1.722	1.881	2.114	1.260	1.260	1.407	1.615	ns
LVCMOS15_F_4	0.775	0.905	0.958	0.905	1.747	1.825	1.959	2.217	1.453	1.453	1.557	1.808	ns
LVCMOS15_F_8	0.775	0.905	0.958	0.905	1.721	1.778	1.930	2.170	1.378	1.378	1.458	1.733	ns
LVCMOS15_S_12	0.775	0.905	0.958	0.905	1.936	1.991	2.139	2.383	1.516	1.516	1.648	1.871	ns
LVCMOS15_S_16	0.775	0.905	0.958	0.905	2.172	2.172	2.389	2.564	1.707	1.707	1.888	2.062	ns
LVCMOS15_S_4	0.775	0.905	0.958	0.905	2.274	2.313	2.483	2.705	1.952	1.952	2.123	2.307	ns
LVCMOS15_S_8	0.775	0.905	0.958	0.905	2.170	2.170	2.400	2.562	1.817	1.817	1.984	2.172	ns
LVCMOS18_F_12	0.810	0.915	0.958	0.915	1.741	1.805	1.962	2.197	1.383	1.383	1.471	1.738	ns
LVCMOS18_F_16	0.810	0.915	0.958	0.915	1.698	1.785	1.917	2.177	1.338	1.338	1.446	1.693	ns
LVCMOS18_F_4	0.810	0.915	0.958	0.915	1.815	1.868	2.013	2.260	1.472	1.472	1.599	1.827	ns
LVCMOS18_F_8	0.810	0.915	0.958	0.915	1.785	1.797	1.979	2.189	1.384	1.384	1.487	1.739	ns
LVCMOS18_S_12	0.810	0.915	0.958	0.915	2.163	2.201	2.408	2.593	1.762	1.762	1.894	2.117	ns
LVCMOS18_S_16	0.810	0.915	0.958	0.915	2.102	2.173	2.362	2.565	1.702	1.702	1.834	2.057	ns
LVCMOS18_S_4	0.810	0.915	0.958	0.915	2.342	2.346	2.567	2.738	1.951	1.951	2.092	2.306	ns
LVCMOS18_S_8	0.810	0.915	0.958	0.915	2.275	2.292	2.511	2.684	1.848	1.848	2.008	2.203	ns

Table 28: **IOB High Density (HD) Switching Characteristics** *(cont'd)*

I/O Standards	$T_{INBUF_DELAY_PAD_I}$				$T_{OUTBUF_DELAY_O_PAD}$				$T_{OUTBUF_DELAY_TD_PAD}$				Units
	0.90V	0.85V		0.72V	0.90V	0.85V		0.72V	0.90V	0.85V		0.72V	
	-3	-2	-1	-2	-3	-2	-1	-2	-3	-2	-1	-2	
LVCMOS25_F_12	0.963	0.988	1.042	0.988	2.153	2.153	2.453	2.545	1.692	1.692	1.856	2.047	ns
LVCMOS25_F_16	0.963	0.988	1.042	0.988	2.105	2.105	2.406	2.497	1.623	1.623	1.786	1.978	ns
LVCMOS25_F_4	0.963	0.988	1.042	0.988	2.317	2.344	2.554	2.736	1.842	1.842	2.039	2.197	ns
LVCMOS25_F_8	0.963	0.988	1.042	0.988	2.184	2.184	2.516	2.576	1.726	1.726	1.910	2.081	ns
LVCMOS25_S_12	0.963	0.988	1.042	0.988	2.550	2.558	2.840	2.950	1.971	1.971	2.194	2.326	ns
LVCMOS25_S_16	0.963	0.988	1.042	0.988	2.449	2.449	2.740	2.841	1.852	1.852	2.063	2.207	ns
LVCMOS25_S_4	0.963	0.988	1.042	0.988	2.770	2.770	3.066	3.162	2.224	2.224	2.458	2.579	ns
LVCMOS25_S_8	0.963	0.988	1.042	0.988	2.663	2.663	2.963	3.055	2.091	2.091	2.373	2.446	ns
LVCMOS33_F_12	1.154	1.154	1.213	1.154	2.415	2.415	2.651	2.807	1.754	1.754	1.915	2.109	ns
LVCMOS33_F_16	1.154	1.154	1.213	1.154	2.381	2.383	2.603	2.775	1.734	1.734	1.869	2.089	ns
LVCMOS33_F_4	1.154	1.154	1.213	1.154	2.541	2.541	2.765	2.933	1.932	1.932	2.135	2.287	ns
LVCMOS33_F_8	1.154	1.154	1.213	1.154	2.603	2.603	2.822	2.995	1.937	1.937	2.130	2.292	ns
LVCMOS33_S_12	1.154	1.154	1.213	1.154	2.705	2.705	3.047	3.097	2.049	2.049	2.318	2.404	ns
LVCMOS33_S_16	1.154	1.154	1.213	1.154	2.714	2.714	3.024	3.106	2.028	2.028	2.232	2.383	ns
LVCMOS33_S_4	1.154	1.154	1.213	1.154	2.999	2.999	3.340	3.391	2.320	2.320	2.610	2.675	ns
LVCMOS33_S_8	1.154	1.154	1.213	1.154	2.929	2.929	3.260	3.321	2.260	2.260	2.532	2.615	ns
LVDS_25	0.980	1.003	1.116	1.003	N/A	N/A	N/A	N/A	N/A	N/A	N/A	N/A	ns
LVPECL	0.980	1.003	1.116	1.003	N/A	N/A	N/A	N/A	N/A	N/A	N/A	N/A	ns
LVTTL_F_12	1.164	1.164	1.223	1.164	2.415	2.415	2.651	2.807	1.754	1.754	1.915	2.109	ns
LVTTL_F_16	1.164	1.164	1.223	1.164	2.464	2.464	2.732	2.856	1.750	1.750	1.986	2.105	ns
LVTTL_F_4	1.164	1.164	1.223	1.164	2.541	2.541	2.765	2.933	1.932	1.932	2.135	2.287	ns
LVTTL_F_8	1.164	1.164	1.223	1.164	2.582	2.582	2.787	2.974	1.910	1.910	2.063	2.265	ns
LVTTL_S_12	1.164	1.164	1.223	1.164	2.731	2.731	3.075	3.123	2.072	2.072	2.343	2.427	ns
LVTTL_S_16	1.164	1.164	1.223	1.164	2.714	2.714	3.024	3.106	2.028	2.028	2.232	2.383	ns
LVTTL_S_4	1.164	1.164	1.223	1.164	2.999	2.999	3.340	3.391	2.320	2.320	2.610	2.675	ns
LVTTL_S_8	1.164	1.164	1.223	1.164	2.929	2.929	3.260	3.321	2.260	2.260	2.532	2.615	ns
SLVS_400_25	0.998	1.020	1.136	1.020	N/A	N/A	N/A	N/A	N/A	N/A	N/A	N/A	ns
SSTL12_F	0.712	0.780	0.867	0.780	1.577	1.643	1.792	2.035	1.285	1.285	1.423	1.640	ns
SSTL12_S	0.712	0.780	0.867	0.780	1.726	1.784	1.948	2.176	1.567	1.567	1.706	1.922	ns
SSTL135_F	0.731	0.798	0.881	0.798	1.558	1.625	1.765	2.017	1.341	1.341	1.458	1.696	ns
SSTL135_II_F	0.731	0.798	0.881	0.798	1.574	1.623	1.770	2.015	1.325	1.325	1.470	1.680	ns
SSTL135_II_S	0.731	0.798	0.881	0.798	1.694	1.768	1.916	2.160	1.722	1.722	1.911	2.077	ns
SSTL135_S	0.731	0.798	0.881	0.798	1.796	1.869	2.025	2.261	1.814	1.814	1.976	2.169	ns
SSTL15_F	0.731	0.838	0.880	0.838	1.544	1.612	1.754	2.004	1.357	1.357	1.464	1.712	ns
SSTL15_II_F	0.731	0.838	0.880	0.838	1.588	1.622	1.778	2.014	1.356	1.356	1.442	1.711	ns
SSTL15_II_S	0.731	0.838	0.880	0.838	1.769	1.821	1.987	2.213	1.895	1.895	2.047	2.250	ns
SSTL15_S	0.731	0.838	0.880	0.838	1.752	1.824	1.977	2.216	1.743	1.743	1.907	2.098	ns
SSTL18_II_F	0.854	0.947	1.021	0.947	1.699	1.729	1.880	2.121	1.377	1.377	1.492	1.732	ns
SSTL18_II_S	0.854	0.947	1.021	0.947	1.748	1.796	1.965	2.188	1.616	1.616	1.800	1.971	ns

Table 28: **IOB High Density (HD) Switching Characteristics** *(cont'd)*

I/O Standards	$T_{INBUF_DELAY_PAD_I}$				$T_{OUTBUF_DELAY_O_PAD}$				$T_{OUTBUF_DELAY_TD_PAD}$				Units
	0.90V	0.85V		0.72V	0.90V	0.85V		0.72V	0.90V	0.85V		0.72V	
	-3	-2	-1	-2	-3	-2	-1	-2	-3	-2	-1	-2	
SSTL18_I_F	0.854	0.947	1.021	0.947	1.566	1.609	1.755	2.001	1.220	1.220	1.313	1.575	ns
SSTL18_I_S	0.854	0.947	1.021	0.947	1.745	1.786	1.942	2.178	1.677	1.677	1.836	2.032	ns
SUB_LVDS	0.871	1.002	1.036	1.002	N/A	N/A	N/A	N/A	N/A	N/A	N/A	N/A	ns

IOB High Performance (HP) Switching Characteristics

Table 29: **IOB High Performance (HP) Switching Characteristics**

I/O Standards	$T_{INBUF_DELAY_PAD_I}$				$T_{OUTBUF_DELAY_O_PAD}$				$T_{OUTBUF_DELAY_TD_PAD}$				Units
	0.90V	0.85V		0.72V	0.90V	0.85V		0.72V	0.90V	0.85V		0.72V	
	-3	-2	-1	-2	-3	-2	-1	-2	-3	-2	-1	-2	
DIFF_HSTL_I_12_F	0.288	0.394	0.402	0.394	0.410	0.423	0.443	0.423	0.514	0.553	0.582	0.553	ns
DIFF_HSTL_I_12_M	0.288	0.394	0.402	0.394	0.552	0.552	0.583	0.552	0.632	0.641	0.679	0.641	ns
DIFF_HSTL_I_12_S	0.288	0.394	0.402	0.394	0.752	0.752	0.800	0.752	0.813	0.813	0.868	0.813	ns
DIFF_HSTL_I_18_F	0.259	0.319	0.339	0.319	0.439	0.456	0.474	0.456	0.549	0.576	0.606	0.576	ns
DIFF_HSTL_I_18_M	0.259	0.319	0.339	0.319	0.563	0.570	0.603	0.570	0.636	0.653	0.692	0.653	ns
DIFF_HSTL_I_18_S	0.259	0.319	0.339	0.319	0.782	0.782	0.834	0.782	0.816	0.816	0.871	0.816	ns
DIFF_HSTL_I_DCI_12_F	0.288	0.394	0.402	0.394	0.393	0.406	0.429	0.406	0.502	0.534	0.564	0.534	ns
DIFF_HSTL_I_DCI_12_M	0.288	0.394	0.402	0.394	0.546	0.557	0.587	0.557	0.636	0.653	0.694	0.653	ns
DIFF_HSTL_I_DCI_12_S	0.288	0.394	0.402	0.394	0.755	0.755	0.806	0.755	0.842	0.842	0.907	0.842	ns
DIFF_HSTL_I_DCI_18_F	0.259	0.323	0.339	0.323	0.422	0.445	0.461	0.445	0.509	0.566	0.595	0.566	ns
DIFF_HSTL_I_DCI_18_M	0.259	0.323	0.339	0.323	0.546	0.555	0.586	0.555	0.626	0.643	0.684	0.643	ns
DIFF_HSTL_I_DCI_18_S	0.259	0.323	0.339	0.323	0.762	0.762	0.818	0.762	0.836	0.836	0.900	0.836	ns
DIFF_HSTL_I_DCI_F	0.335	0.397	0.417	0.397	0.407	0.431	0.445	0.431	0.517	0.555	0.575	0.555	ns
DIFF_HSTL_I_DCI_M	0.335	0.397	0.417	0.397	0.549	0.553	0.583	0.553	0.634	0.644	0.684	0.644	ns
DIFF_HSTL_I_DCI_S	0.335	0.397	0.417	0.397	0.767	0.767	0.823	0.767	0.848	0.848	0.912	0.848	ns
DIFF_HSTL_I_F	0.304	0.404	0.417	0.404	0.409	0.423	0.443	0.423	0.514	0.549	0.581	0.549	ns
DIFF_HSTL_I_M	0.304	0.404	0.417	0.404	0.549	0.555	0.586	0.555	0.624	0.640	0.677	0.640	ns
DIFF_HSTL_I_S	0.304	0.404	0.417	0.404	0.767	0.767	0.818	0.767	0.811	0.811	0.866	0.811	ns
DIFF_HSUL_12_DCI_F	0.320	0.381	0.400	0.381	0.411	0.425	0.443	0.425	0.520	0.558	0.586	0.558	ns
DIFF_HSUL_12_DCI_M	0.320	0.381	0.400	0.381	0.546	0.557	0.587	0.557	0.636	0.653	0.694	0.653	ns
DIFF_HSUL_12_DCI_S	0.320	0.381	0.400	0.381	0.737	0.737	0.787	0.737	0.822	0.822	0.885	0.822	ns
DIFF_HSUL_12_F	0.322	0.394	0.402	0.394	0.394	0.412	0.430	0.412	0.494	0.538	0.566	0.538	ns
DIFF_HSUL_12_M	0.322	0.394	0.402	0.394	0.552	0.552	0.583	0.552	0.632	0.641	0.679	0.641	ns
DIFF_HSUL_12_S	0.322	0.394	0.402	0.394	0.752	0.752	0.800	0.752	0.813	0.813	0.868	0.813	ns
DIFF_POD10_DCI_F	0.289	0.411	0.430	0.411	0.407	0.425	0.444	0.425	0.512	0.555	0.584	0.555	ns
DIFF_POD10_DCI_M	0.289	0.411	0.430	0.411	0.533	0.542	0.571	0.542	0.618	0.640	0.681	0.640	ns
DIFF_POD10_DCI_S	0.289	0.411	0.430	0.411	0.754	0.754	0.815	0.754	0.850	0.850	0.917	0.850	ns
DIFF_POD10_F	0.288	0.411	0.433	0.411	0.425	0.438	0.459	0.438	0.531	0.569	0.601	0.569	ns

Table 29: **IOB High Performance (HP) Switching Characteristics** *(cont'd)*

I/O Standards	$T_{INBUF_DELAY_PAD_I}$				$T_{OUTBUF_DELAY_O_PAD}$				$T_{OUTBUF_DELAY_TD_PAD}$				Units
	0.90V	0.85V		0.72V	0.90V	0.85V		0.72V	0.90V	0.85V		0.72V	
	-3	-2	-1	-2	-3	-2	-1	-2	-3	-2	-1	-2	
DIFF_POD10_M	0.288	0.411	0.433	0.411	0.519	0.538	0.568	0.538	0.589	0.630	0.667	0.630	ns
DIFF_POD10_S	0.288	0.411	0.433	0.411	0.752	0.766	0.821	0.766	0.821	0.836	0.894	0.836	ns
DIFF_POD12_DCI_F	0.320	0.407	0.432	0.407	0.411	0.425	0.443	0.425	0.519	0.558	0.586	0.558	ns
DIFF_POD12_DCI_M	0.320	0.407	0.432	0.407	0.516	0.543	0.572	0.543	0.602	0.638	0.678	0.638	ns
DIFF_POD12_DCI_S	0.320	0.407	0.432	0.407	0.740	0.772	0.822	0.772	0.833	0.862	0.929	0.862	ns
DIFF_POD12_F	0.305	0.409	0.430	0.409	0.438	0.455	0.476	0.455	0.549	0.595	0.626	0.595	ns
DIFF_POD12_M	0.305	0.409	0.430	0.409	0.551	0.551	0.582	0.551	0.632	0.641	0.679	0.641	ns
DIFF_POD12_S	0.305	0.409	0.430	0.409	0.749	0.767	0.817	0.767	0.818	0.832	0.889	0.832	ns
DIFF_SSTL12_DCI_F	0.303	0.381	0.400	0.381	0.411	0.425	0.443	0.425	0.520	0.558	0.586	0.558	ns
DIFF_SSTL12_DCI_M	0.303	0.381	0.400	0.381	0.549	0.557	0.587	0.557	0.643	0.654	0.694	0.654	ns
DIFF_SSTL12_DCI_S	0.303	0.381	0.400	0.381	0.754	0.754	0.803	0.754	0.842	0.842	0.908	0.842	ns
DIFF_SSTL12_F	0.288	0.394	0.402	0.394	0.394	0.412	0.430	0.412	0.494	0.538	0.566	0.538	ns
DIFF_SSTL12_M	0.288	0.394	0.402	0.394	0.550	0.553	0.584	0.553	0.630	0.641	0.676	0.641	ns
DIFF_SSTL12_S	0.288	0.394	0.402	0.394	0.758	0.758	0.808	0.758	0.823	0.823	0.879	0.823	ns
DIFF_SSTL135_DCI_F	0.303	0.371	0.402	0.371	0.392	0.411	0.428	0.411	0.494	0.537	0.565	0.537	ns
DIFF_SSTL135_DCI_M	0.303	0.371	0.402	0.371	0.551	0.551	0.582	0.551	0.643	0.645	0.685	0.645	ns
DIFF_SSTL135_DCI_S	0.303	0.371	0.402	0.371	0.746	0.746	0.799	0.746	0.829	0.829	0.893	0.829	ns
DIFF_SSTL135_F	0.289	0.375	0.402	0.375	0.393	0.408	0.428	0.408	0.491	0.528	0.561	0.528	ns
DIFF_SSTL135_M	0.289	0.375	0.402	0.375	0.548	0.555	0.585	0.555	0.621	0.641	0.679	0.641	ns
DIFF_SSTL135_S	0.289	0.375	0.402	0.375	0.772	0.772	0.823	0.772	0.827	0.827	0.878	0.827	ns
DIFF_SSTL15_DCI_F	0.335	0.397	0.417	0.397	0.394	0.412	0.429	0.412	0.497	0.531	0.563	0.531	ns
DIFF_SSTL15_DCI_M	0.335	0.397	0.417	0.397	0.549	0.553	0.583	0.553	0.632	0.645	0.685	0.645	ns
DIFF_SSTL15_DCI_S	0.335	0.397	0.417	0.397	0.768	0.768	0.822	0.768	0.847	0.847	0.912	0.847	ns
DIFF_SSTL15_F	0.304	0.404	0.417	0.404	0.409	0.424	0.445	0.424	0.513	0.551	0.577	0.551	ns
DIFF_SSTL15_M	0.304	0.404	0.417	0.404	0.547	0.554	0.585	0.554	0.624	0.639	0.677	0.639	ns
DIFF_SSTL15_S	0.304	0.404	0.417	0.404	0.767	0.767	0.817	0.767	0.813	0.813	0.867	0.813	ns
DIFF_SSTL18_I_DCI_F	0.256	0.320	0.336	0.320	0.422	0.445	0.461	0.445	0.540	0.566	0.595	0.566	ns
DIFF_SSTL18_I_DCI_M	0.256	0.320	0.336	0.320	0.552	0.554	0.585	0.554	0.629	0.644	0.683	0.644	ns
DIFF_SSTL18_I_DCI_S	0.256	0.320	0.336	0.320	0.762	0.762	0.818	0.762	0.837	0.837	0.899	0.837	ns
DIFF_SSTL18_I_F	0.256	0.316	0.336	0.316	0.439	0.454	0.476	0.454	0.549	0.578	0.608	0.578	ns
DIFF_SSTL18_I_M	0.256	0.316	0.336	0.316	0.567	0.571	0.603	0.571	0.535	0.652	0.692	0.652	ns
DIFF_SSTL18_I_S	0.256	0.316	0.336	0.316	0.782	0.782	0.835	0.782	0.816	0.816	0.870	0.816	ns
HSLVDCI_15_F	0.336	0.393	0.415	0.393	0.407	0.425	0.443	0.425	0.513	0.548	0.579	0.548	ns
HSLVDCI_15_M	0.336	0.393	0.415	0.393	0.548	0.552	0.581	0.552	0.635	0.644	0.684	0.644	ns
HSLVDCI_15_S	0.336	0.393	0.415	0.393	0.748	0.748	0.802	0.748	0.827	0.827	0.890	0.827	ns
HSLVDCI_18_F	0.367	0.424	0.447	0.424	0.424	0.445	0.461	0.445	0.541	0.566	0.595	0.566	ns
HSLVDCI_18_M	0.367	0.424	0.447	0.424	0.563	0.567	0.598	0.567	0.647	0.658	0.699	0.658	ns
HSLVDCI_18_S	0.367	0.424	0.447	0.424	0.761	0.761	0.817	0.761	0.836	0.836	0.900	0.836	ns
HSTL_I_12_F	0.322	0.378	0.399	0.378	0.410	0.423	0.443	0.423	0.514	0.553	0.582	0.553	ns

Table 29: **IOB High Performance (HP) Switching Characteristics** *(cont'd)*

I/O Standards	$T_{INBUF_DELAY_PAD_I}$				$T_{OUTBUF_DELAY_O_PAD}$				$T_{OUTBUF_DELAY_TD_PAD}$				Units
	0.90V	0.85V		0.72V	0.90V	0.85V		0.72V	0.90V	0.85V		0.72V	
	-3	-2	-1	-2	-3	-2	-1	-2	-3	-2	-1	-2	
HSTL_I_12_M	0.322	0.378	0.399	0.378	0.551	0.551	0.582	0.551	0.632	0.642	0.679	0.642	ns
HSTL_I_12_S	0.322	0.378	0.399	0.378	0.750	0.750	0.799	0.750	0.813	0.813	0.868	0.813	ns
HSTL_I_18_F	0.258	0.322	0.339	0.322	0.439	0.456	0.474	0.456	0.549	0.576	0.606	0.576	ns
HSTL_I_18_M	0.258	0.322	0.339	0.322	0.562	0.569	0.602	0.569	0.637	0.653	0.692	0.653	ns
HSTL_I_18_S	0.258	0.322	0.339	0.322	0.781	0.781	0.833	0.781	0.816	0.816	0.871	0.816	ns
HSTL_I_DCI_12_F	0.322	0.378	0.399	0.378	0.393	0.406	0.429	0.406	0.502	0.534	0.564	0.534	ns
HSTL_I_DCI_12_M	0.322	0.378	0.399	0.378	0.551	0.556	0.586	0.556	0.644	0.654	0.694	0.654	ns
HSTL_I_DCI_12_S	0.322	0.378	0.399	0.378	0.754	0.754	0.803	0.754	0.842	0.842	0.907	0.842	ns
HSTL_I_DCI_18_F	0.258	0.321	0.339	0.321	0.422	0.445	0.461	0.445	0.509	0.566	0.595	0.566	ns
HSTL_I_DCI_18_M	0.258	0.321	0.339	0.321	0.551	0.554	0.585	0.554	0.634	0.643	0.684	0.643	ns
HSTL_I_DCI_18_S	0.258	0.321	0.339	0.321	0.761	0.761	0.817	0.761	0.836	0.836	0.900	0.836	ns
HSTL_I_DCI_F	0.288	0.393	0.415	0.393	0.407	0.431	0.445	0.431	0.517	0.555	0.575	0.555	ns
HSTL_I_DCI_M	0.288	0.393	0.415	0.393	0.548	0.552	0.581	0.552	0.635	0.644	0.684	0.644	ns
HSTL_I_DCI_S	0.288	0.393	0.415	0.393	0.766	0.766	0.821	0.766	0.847	0.847	0.912	0.847	ns
HSTL_I_F	0.322	0.378	0.399	0.378	0.409	0.423	0.443	0.423	0.514	0.549	0.581	0.549	ns
HSTL_I_M	0.322	0.378	0.399	0.378	0.548	0.554	0.585	0.554	0.624	0.640	0.677	0.640	ns
HSTL_I_S	0.322	0.378	0.399	0.378	0.766	0.766	0.816	0.766	0.811	0.811	0.866	0.811	ns
HSUL_12_DCI_F	0.319	0.378	0.399	0.378	0.411	0.425	0.443	0.425	0.520	0.558	0.586	0.558	ns
HSUL_12_DCI_M	0.319	0.378	0.399	0.378	0.551	0.556	0.586	0.556	0.644	0.654	0.694	0.654	ns
HSUL_12_DCI_S	0.319	0.378	0.399	0.378	0.736	0.736	0.784	0.736	0.821	0.821	0.886	0.821	ns
HSUL_12_F	0.305	0.378	0.399	0.378	0.394	0.412	0.430	0.412	0.494	0.538	0.566	0.538	ns
HSUL_12_M	0.305	0.378	0.399	0.378	0.551	0.551	0.582	0.551	0.632	0.642	0.679	0.642	ns
HSUL_12_S	0.305	0.378	0.399	0.378	0.750	0.750	0.799	0.750	0.813	0.813	0.868	0.813	ns
LVCMOS12_F_2	0.443	0.512	0.555	0.512	0.657	0.672	0.692	0.672	0.862	0.898	0.922	0.898	ns
LVCMOS12_F_4	0.443	0.512	0.555	0.512	0.486	0.504	0.521	0.504	0.645	0.664	0.693	0.664	ns
LVCMOS12_F_6	0.443	0.512	0.555	0.512	0.469	0.485	0.507	0.485	0.585	0.634	0.669	0.634	ns
LVCMOS12_F_8	0.443	0.512	0.555	0.512	0.457	0.465	0.489	0.465	0.592	0.611	0.666	0.611	ns
LVCMOS12_M_2	0.443	0.512	0.555	0.512	0.687	0.708	0.727	0.708	0.889	0.916	0.945	0.916	ns
LVCMOS12_M_4	0.443	0.512	0.555	0.512	0.533	0.550	0.573	0.550	0.629	0.664	0.690	0.664	ns
LVCMOS12_M_6	0.443	0.512	0.555	0.512	0.520	0.527	0.554	0.527	0.608	0.622	0.652	0.622	ns
LVCMOS12_M_8	0.443	0.512	0.555	0.512	0.532	0.540	0.571	0.540	0.606	0.614	0.649	0.614	ns
LVCMOS12_S_2	0.443	0.512	0.555	0.512	0.767	0.767	0.803	0.767	0.981	0.990	1.024	0.990	ns
LVCMOS12_S_4	0.443	0.512	0.555	0.512	0.666	0.666	0.704	0.666	0.803	0.803	0.848	0.803	ns
LVCMOS12_S_6	0.443	0.512	0.555	0.512	0.657	0.657	0.695	0.657	0.732	0.732	0.774	0.732	ns
LVCMOS12_S_8	0.443	0.512	0.555	0.512	0.708	0.708	0.761	0.708	0.745	0.745	0.790	0.745	ns
LVCMOS15_F_12	0.368	0.414	0.445	0.414	0.485	0.500	0.522	0.500	0.584	0.647	0.682	0.647	ns
LVCMOS15_F_2	0.368	0.414	0.445	0.414	0.686	0.702	0.722	0.702	0.893	0.919	0.940	0.919	ns
LVCMOS15_F_4	0.368	0.414	0.445	0.414	0.567	0.579	0.601	0.579	0.727	0.755	0.781	0.755	ns
LVCMOS15_F_6	0.368	0.414	0.445	0.414	0.533	0.547	0.569	0.547	0.684	0.711	0.742	0.711	ns

Table 29: **IOB High Performance (HP) Switching Characteristics** *(cont'd)*

I/O Standards	$T_{INBUF_DELAY_PAD_I}$				$T_{OUTBUF_DELAY_O_PAD}$				$T_{OUTBUF_DELAY_TD_PAD}$				Units
	0.90V	0.85V		0.72V	0.90V	0.85V		0.72V	0.90V	0.85V		0.72V	
	-3	-2	-1	-2	-3	-2	-1	-2	-3	-2	-1	-2	
LVCMOS15_F_8	0.368	0.414	0.445	0.414	0.500	0.518	0.538	0.518	0.635	0.686	0.703	0.686	ns
LVCMOS15_M_12	0.368	0.414	0.445	0.414	0.607	0.607	0.644	0.607	0.637	0.637	0.676	0.637	ns
LVCMOS15_M_2	0.368	0.414	0.445	0.414	0.736	0.741	0.770	0.741	0.929	0.938	0.962	0.938	ns
LVCMOS15_M_4	0.368	0.414	0.445	0.414	0.610	0.625	0.651	0.625	0.733	0.754	0.786	0.754	ns
LVCMOS15_M_6	0.368	0.414	0.445	0.414	0.564	0.576	0.604	0.576	0.655	0.674	0.710	0.674	ns
LVCMOS15_M_8	0.368	0.414	0.445	0.414	0.565	0.568	0.601	0.568	0.634	0.639	0.681	0.639	ns
LVCMOS15_S_12	0.368	0.414	0.445	0.414	0.788	0.788	0.855	0.788	0.695	0.695	0.733	0.695	ns
LVCMOS15_S_2	0.368	0.414	0.445	0.414	0.829	0.829	0.864	0.829	1.038	1.039	1.079	1.039	ns
LVCMOS15_S_4	0.368	0.414	0.445	0.414	0.687	0.687	0.725	0.687	0.813	0.813	0.851	0.813	ns
LVCMOS15_S_6	0.368	0.414	0.445	0.414	0.671	0.671	0.710	0.671	0.726	0.726	0.763	0.726	ns
LVCMOS15_S_8	0.368	0.414	0.445	0.414	0.704	0.704	0.755	0.704	0.721	0.721	0.758	0.721	ns
LVCMOS18_F_12	0.352	0.418	0.445	0.418	0.564	0.573	0.601	0.573	0.696	0.731	0.769	0.731	ns
LVCMOS18_F_2	0.352	0.418	0.445	0.418	0.723	0.739	0.760	0.739	0.918	0.945	0.971	0.945	ns
LVCMOS18_F_4	0.352	0.418	0.445	0.418	0.598	0.609	0.630	0.609	0.749	0.778	0.802	0.778	ns
LVCMOS18_F_6	0.352	0.418	0.445	0.418	0.598	0.603	0.633	0.603	0.781	0.781	0.808	0.781	ns
LVCMOS18_F_8	0.352	0.418	0.445	0.418	0.567	0.573	0.600	0.573	0.712	0.733	0.767	0.733	ns
LVCMOS18_M_12	0.352	0.418	0.445	0.418	0.640	0.640	0.678	0.640	0.670	0.670	0.709	0.670	ns
LVCMOS18_M_2	0.352	0.418	0.445	0.418	0.785	0.798	0.822	0.798	0.986	0.991	1.016	0.991	ns
LVCMOS18_M_4	0.352	0.418	0.445	0.418	0.658	0.664	0.693	0.664	0.786	0.798	0.836	0.798	ns
LVCMOS18_M_6	0.352	0.418	0.445	0.418	0.625	0.629	0.663	0.629	0.727	0.735	0.775	0.735	ns
LVCMOS18_M_8	0.352	0.418	0.445	0.418	0.626	0.626	0.661	0.626	0.705	0.705	0.746	0.705	ns
LVCMOS18_S_12	0.352	0.418	0.445	0.418	0.795	0.795	0.861	0.795	0.683	0.683	0.721	0.683	ns
LVCMOS18_S_2	0.352	0.418	0.445	0.418	0.861	0.862	0.897	0.862	1.061	1.076	1.098	1.076	ns
LVCMOS18_S_4	0.352	0.418	0.445	0.418	0.716	0.716	0.758	0.716	0.829	0.829	0.872	0.829	ns
LVCMOS18_S_6	0.352	0.418	0.445	0.418	0.682	0.682	0.724	0.682	0.724	0.724	0.762	0.724	ns
LVCMOS18_S_8	0.352	0.418	0.445	0.418	0.707	0.707	0.760	0.707	0.709	0.709	0.745	0.709	ns
LVDCI_15_F	0.369	0.425	0.462	0.425	0.407	0.426	0.443	0.426	0.514	0.548	0.581	0.548	ns
LVDCI_15_M	0.369	0.425	0.462	0.425	0.549	0.553	0.582	0.553	0.632	0.645	0.685	0.645	ns
LVDCI_15_S	0.369	0.425	0.462	0.425	0.749	0.749	0.803	0.749	0.821	0.821	0.890	0.821	ns
LVDCI_18_F	0.367	0.414	0.447	0.414	0.422	0.441	0.459	0.441	0.541	0.560	0.589	0.560	ns
LVDCI_18_M	0.367	0.414	0.447	0.414	0.546	0.554	0.585	0.554	0.622	0.644	0.683	0.644	ns
LVDCI_18_S	0.367	0.414	0.447	0.414	0.760	0.760	0.818	0.760	0.837	0.837	0.899	0.837	ns
LVDS	0.508	0.539	0.620	0.539	0.626	0.626	0.662	0.626	960.447	960.447	960.447	960.447	ns
MIPI_DPHY_DCI_HS	0.305	0.386	0.415	0.386	0.489	0.502	0.522	0.502	N/A	N/A	N/A	N/A	ns
MIPI_DPHY_DCI_LP	8.438	8.438	8.792	8.438	0.895	0.914	0.937	0.914	N/A	N/A	N/A	N/A	ns
POD10_DCI_F	0.336	0.408	0.430	0.408	0.407	0.425	0.444	0.425	0.512	0.555	0.584	0.555	ns
POD10_DCI_M	0.336	0.408	0.430	0.408	0.533	0.542	0.571	0.542	0.618	0.640	0.681	0.640	ns
POD10_DCI_S	0.336	0.408	0.430	0.408	0.724	0.754	0.815	0.754	0.815	0.850	0.917	0.850	ns
POD10_F	0.336	0.407	0.430	0.407	0.425	0.438	0.459	0.438	0.531	0.569	0.601	0.569	ns

Table 29: **IOB High Performance (HP) Switching Characteristics** *(cont'd)*

I/O Standards	$T_{INBUF_DELAY_PAD_I}$				$T_{OUTBUF_DELAY_O_PAD}$				$T_{OUTBUF_DELAY_TD_PAD}$				Units
	0.90V	0.85V		0.72V	0.90V	0.85V		0.72V	0.90V	0.85V		0.72V	
	-3	-2	-1	-2	-3	-2	-1	-2	-3	-2	-1	-2	
POD10_M	0.336	0.407	0.430	0.407	0.519	0.538	0.568	0.538	0.589	0.630	0.667	0.630	ns
POD10_S	0.336	0.407	0.430	0.407	0.752	0.766	0.821	0.766	0.821	0.836	0.894	0.836	ns
POD12_DCI_F	0.336	0.409	0.431	0.409	0.411	0.425	0.443	0.425	0.519	0.558	0.586	0.558	ns
POD12_DCI_M	0.336	0.409	0.431	0.409	0.516	0.543	0.572	0.543	0.602	0.638	0.678	0.638	ns
POD12_DCI_S	0.336	0.409	0.431	0.409	0.740	0.772	0.822	0.772	0.833	0.862	0.929	0.862	ns
POD12_F	0.336	0.409	0.431	0.409	0.438	0.455	0.476	0.455	0.549	0.595	0.626	0.595	ns
POD12_M	0.336	0.409	0.431	0.409	0.551	0.551	0.582	0.551	0.632	0.641	0.679	0.641	ns
POD12_S	0.336	0.409	0.431	0.409	0.749	0.767	0.817	0.767	0.818	0.832	0.889	0.832	ns
SLVS_400_18	0.492	0.539	0.620	0.539	N/A	N/A	N/A	N/A	N/A	N/A	N/A	N/A	ns
SSTL12_DCI_F	0.331	0.381	0.399	0.381	0.411	0.425	0.443	0.425	0.520	0.558	0.586	0.558	ns
SSTL12_DCI_M	0.331	0.381	0.399	0.381	0.549	0.557	0.587	0.557	0.643	0.654	0.694	0.654	ns
SSTL12_DCI_S	0.331	0.381	0.399	0.381	0.754	0.754	0.803	0.754	0.842	0.842	0.908	0.842	ns
SSTL12_F	0.320	0.403	0.403	0.403	0.394	0.412	0.430	0.412	0.494	0.538	0.566	0.538	ns
SSTL12_M	0.320	0.403	0.403	0.403	0.550	0.553	0.584	0.553	0.630	0.641	0.676	0.641	ns
SSTL12_S	0.320	0.403	0.403	0.403	0.758	0.758	0.808	0.758	0.823	0.823	0.879	0.823	ns
SSTL135_DCI_F	0.341	0.366	0.399	0.366	0.392	0.411	0.428	0.411	0.494	0.537	0.565	0.537	ns
SSTL135_DCI_M	0.341	0.366	0.399	0.366	0.551	0.551	0.582	0.551	0.643	0.645	0.685	0.645	ns
SSTL135_DCI_S	0.341	0.366	0.399	0.366	0.746	0.746	0.799	0.746	0.829	0.829	0.893	0.829	ns
SSTL135_F	0.321	0.378	0.399	0.378	0.393	0.408	0.428	0.408	0.491	0.528	0.561	0.528	ns
SSTL135_M	0.321	0.378	0.399	0.378	0.548	0.555	0.585	0.555	0.621	0.641	0.679	0.641	ns
SSTL135_S	0.321	0.378	0.399	0.378	0.772	0.772	0.823	0.772	0.827	0.827	0.878	0.827	ns
SSTL15_DCI_F	0.319	0.402	0.417	0.402	0.394	0.412	0.429	0.412	0.497	0.531	0.563	0.531	ns
SSTL15_DCI_M	0.319	0.402	0.417	0.402	0.549	0.553	0.583	0.553	0.632	0.645	0.685	0.645	ns
SSTL15_DCI_S	0.319	0.402	0.417	0.402	0.768	0.768	0.822	0.768	0.847	0.847	0.912	0.847	ns
SSTL15_F	0.320	0.371	0.400	0.371	0.393	0.408	0.428	0.408	0.494	0.530	0.556	0.530	ns
SSTL15_M	0.320	0.371	0.400	0.371	0.547	0.554	0.585	0.554	0.624	0.639	0.677	0.639	ns
SSTL15_S	0.320	0.371	0.400	0.371	0.767	0.767	0.817	0.767	0.813	0.813	0.867	0.813	ns
SSTL18_I_DCI_F	0.256	0.329	0.336	0.329	0.422	0.445	0.461	0.445	0.540	0.566	0.595	0.566	ns
SSTL18_I_DCI_M	0.256	0.329	0.336	0.329	0.552	0.554	0.585	0.554	0.629	0.644	0.683	0.644	ns
SSTL18_I_DCI_S	0.256	0.329	0.336	0.329	0.762	0.762	0.818	0.762	0.837	0.837	0.899	0.837	ns
SSTL18_I_F	0.259	0.316	0.337	0.316	0.439	0.454	0.476	0.454	0.549	0.578	0.608	0.578	ns
SSTL18_I_M	0.259	0.316	0.337	0.316	0.567	0.571	0.603	0.571	0.535	0.652	0.692	0.652	ns
SSTL18_I_S	0.259	0.316	0.337	0.316	0.782	0.782	0.835	0.782	0.816	0.816	0.870	0.816	ns
SUB_LVDS	0.508	0.539	0.620	0.539	0.658	0.660	0.692	0.660	907.387	969.863	969.863	969.863	ns

IOB 3-state Output Switching Characteristics

Table 30 specifies the values of $T_{OUTBUF_DELAY_TE_PAD}$ and $T_{INBUF_DELAY_IBUFDIS_O}$.

- $T_{OUTBUF_DELAY_TE_PAD}$ is the delay from the T pin to the IOB pad through the output buffer of an IOB pad, when 3-state is enabled (i.e., a high impedance state).
- $T_{INBUF_DELAY_IBUFDIS_O}$ is the IOB delay from IBUFDISABLE to O output.
- In HP I/O banks, the internal DCI termination turn-off time is always faster than $T_{OUTBUF_DELAY_TE_PAD}$ when the DCITERMDISABLE pin is used.
- In HD I/O banks, the internal IN_TERM termination turn-off time is always faster than $T_{OUTBUF_DELAY_TE_PAD}$ when the INTERMDISABLE pin is used.

Table 30: **IOB 3-state Output Switching Characteristics**

Symbol	Description	Speed Grade and V_{CCINT} Operating Voltages				Units
		0.90V	0.85V		0.72V	
		-3	-2	-1	-2	
$T_{OUTBUF_DELAY_TE_PAD}$	T input to pad high-impedance for HD I/O banks	6.167	6.318	6.369	6.699	ns
	T input to pad high-impedance for the HP I/O banks	5.330	5.330	5.341	5.330	ns
$T_{INBUF_DELAY_IBUFDIS_O}$	IBUF turn-on time from IBUFDISABLE to O output for HD I/O banks	2.266	2.266	2.430	2.266	ns
	IBUF turn-on time from IBUFDISABLE to O output for the HP I/O banks	0.873	0.936	1.037	0.936	ns

Input Delay Measurement Methodology

The following table shows the test setup parameters used for measuring input delay.

Table 31: **Input Delay Measurement Methodology**

Description	I/O Standard Attribute	V_L [1, 2]	V_H [1, 2]	V_{MEAS} [1, 4]	V_{REF} [1, 3, 5]
LVCMOS, 1.2V	LVCMOS12	0.1	1.1	0.6	–
LVCMOS, LVDCI, HSLVDCI, 1.5V	LVCMOS15, LVDCI_15, HSLVDCI_15	0.1	1.4	0.75	–
LVCMOS, LVDCI, HSLVDCI, 1.8V	LVCMOS18, LVDCI_18, HSLVDCI_18	0.1	1.7	0.9	–
LVCMOS, 2.5V	LVCMOS25	0.1	2.4	1.25	–
LVCMOS, 3.3V	LVCMOS33	0.1	3.2	1.65	–
LVTTL, 3.3V	LVTTL	0.1	3.2	1.65	–
HSTL (high-speed transceiver logic), class I, 1.2V	HSTL_I_12	V_{REF} – 0.25	V_{REF} + 0.25	V_{REF}	0.6
HSTL, class I, 1.5V	HSTL_I	V_{REF} – 0.325	V_{REF} + 0.325	V_{REF}	0.75
HSTL, class I, 1.8V	HSTL_I_18	V_{REF} – 0.4	V_{REF} + 0.4	V_{REF}	0.9
HSUL (high-speed unterminated logic), 1.2V	HSUL_12	V_{REF} – 0.25	V_{REF} + 0.25	V_{REF}	0.6
SSTL12 (stub series terminated logic), 1.2V	SSTL12	V_{REF} – 0.25	V_{REF} + 0.25	V_{REF}	0.6
SSTL135 and SSTL135 class II, 1.35V	SSTL135, SSTL135_II	V_{REF} – 0.2875	V_{REF} + 0.2875	V_{REF}	0.675
SSTL15 and SSTL15 class II, 1.5V	SSTL15, SSTL15_II	V_{REF} – 0.325	V_{REF} + 0.325	V_{REF}	0.75
SSTL18, class I and II, 1.8V	SSTL18_I, SSTL18_II	V_{REF} – 0.4	V_{REF} + 0.4	V_{REF}	0.9
POD10, 1.0V	POD10	V_{REF} – 0.2	V_{REF} + 0.2	V_{REF}	0.7

Table 31: **Input Delay Measurement Methodology** *(cont'd)*

Description	I/O Standard Attribute	V_L [1, 2]	V_H [1, 2]	V_{MEAS} [1, 4]	V_{REF} [1, 3, 5]
POD12, 1.2V	POD12	V_{REF} – 0.24	V_{REF} + 0.24	V_{REF}	0.84
DIFF_HSTL, class I, 1.2V	DIFF_HSTL_I_12	0.6 – 0.25	0.6 + 0.25	0[6]	–
DIFF_HSTL, class I, 1.5V	DIFF_HSTL_I	0.75 – 0.325	0.75 + 0.325	0[6]	–
DIFF_HSTL, class I, 1.8V	DIFF_HSTL_I_18	0.9 – 0.4	0.9 + 0.4	0[6]	–
DIFF_HSUL, 1.2V	DIFF_HSUL_12	0.6 – 0.25	0.6 + 0.25	0[6]	–
DIFF_SSTL, 1.2V	DIFF_SSTL12	0.6 – 0.25	0.6 + 0.25	0[6]	–
DIFF_SSTL135 and DIFF_SSTL135 class II, 1.35V	DIFF_SSTL135, DIFF_SSTL135_II	0.675 – 0.2875	0.675 + 0.2875	0[6]	–
DIFF_SSTL15 and DIFF_SSTL15 class II, 1.5V	DIFF_SSTL15, DIFF_SSTL15_II	0.75 – 0.325	0.75 + 0.325	0[6]	–
DIFF_SSTL18_I, DIFF_SSTL18_II, 1.8V	DIFF_SSTL18_I, DIFF_SSTL18_II	0.9 – 0.4	0.9 + 0.4	0[6]	–
DIFF_POD10, 1.0V	DIFF_POD10	0.5 – 0.2	0.5 + 0.2	0[6]	–
DIFF_POD12, 1.2V	DIFF_POD12	0.6 – 0.25	0.6 + 0.25	0[6]	–
LVDS (low-voltage differential signaling), 1.8V	LVDS	0.9 – 0.125	0.9 + 0.125	0[6]	–
LVDS_25, 2.5V	LVDS_25	1.25 – 0.125	1.25 + 0.125	0[6]	–
SUB_LVDS, 1.8V	SUB_LVDS	0.9 – 0.125	0.9 + 0.125	0[6]	–
SLVS, 1.8V	SLVS_400_18	0.9 – 0.125	0.9 + 0.125	0[6]	–
SLVS, 2.5V	SLVS_400_25	1.25 – 0.125	1.25 + 0.125	0[6]	–
LVPECL, 2.5V	LVPECL	1.25 – 0.125	1.25 + 0.125	0[6]	–
MIPI D-PHY (high speed) 1.2V	MIPI_DPHY_DCI_HS	0.2 – 0.125	0.2 + 0.125	0[6]	–
MIPI D-PHY (low power) 1.2V	MIPI_DPHY_DCI_LP	0.715 – 0.2	0.715 + 0.2	0[6]	–

Notes:

1. The input delay measurement methodology parameters for LVDCI/HSLVDCI are the same for LVCMOS standards of the same voltage. Parameters for all other DCI standards are the same for the corresponding non-DCI standards.
2. Input waveform switches between V_L and V_H.
3. Measurements are made at typical, minimum, and maximum V_{REF} values. Reported delays reflect worst case of these measurements. V_{REF} values listed are typical.
4. Input voltage level from which measurement starts.
5. This is an input voltage reference that bears no relation to the V_{REF}/V_{MEAS} parameters found in IBIS models and/or noted in Figure 1.
6. The value given is the differential input voltage.

Output Delay Measurement Methodology

Output delays are measured with short output traces. Standard termination was used for all testing. The propagation delay of the trace is characterized separately and subtracted from the final measurement, and is therefore not included in the generalized test setups shown in Figure 1 and Figure 2.

Figure 1: **Single-Ended Test Setup**

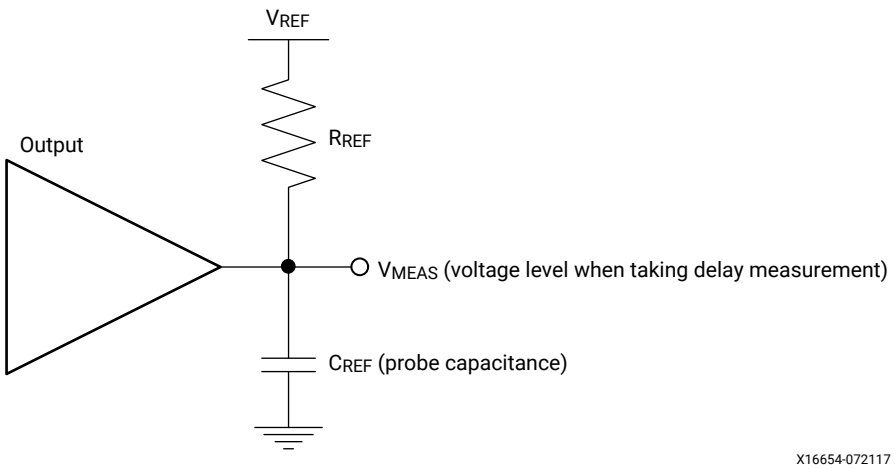

Figure 2: **Differential Test Setup**

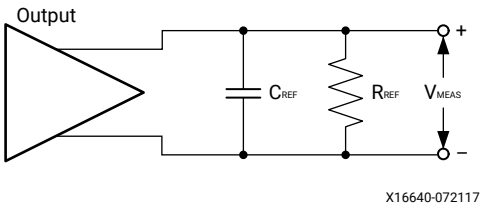

Parameters V_{REF}, R_{REF}, C_{REF}, and V_{MEAS} fully describe the test conditions for each I/O standard. The most accurate prediction of propagation delay in any given application can be obtained through IBIS simulation, using this method:

1. Simulate the output driver of choice into the generalized test setup using values from Table 32.
2. Record the time to V_{MEAS}.
3. Simulate the output driver of choice into the actual PCB trace and load using the appropriate IBIS model or capacitance value to represent the load.
4. Record the time to V_{MEAS}.
5. Compare the results of step 2 and step 4. The increase or decrease in delay yields the actual propagation delay of the PCB trace.

Table 32: **Output Delay Measurement Methodology**

Description	I/O Standard Attribute	R_{REF} (Ω)	C_{REF}[1] (pF)	V_{MEAS} (V)	V_{REF} (V)
LVCMOS, 1.2V	LVCMOS12	1M	0	0.6	0
LVCMOS, 1.5V	LVCMOS15	1M	0	0.75	0
LVCMOS, 1.8V	LVCMOS18	1M	0	0.9	0
LVCMOS, 2.5V	LVCMOS25	1M	0	1.25	0
LVCMOS, 3.3V	LVCMOS33	1M	0	1.65	0
LVTTL, 3.3V	LVTTL	1M	0	1.65	0
LVDCI, HSLVDCI, 1.5V	LVDCI_15, HSLVDCI_15	50	0	V_{REF}	0.75

Table 32: **Output Delay Measurement Methodology** *(cont'd)*

Description	I/O Standard Attribute	R_{REF} (Ω)	C_{REF}[1] (pF)	V_{MEAS} (V)	V_{REF} (V)
LVDCI, HSLVDCI, 1.8V	LVDCI_15, HSLVDCI_18	50	0	V_{REF}	0.9
HSTL (high-speed transceiver logic), class I, 1.2V	HSTL_I_12	50	0	V_{REF}	0.6
HSTL, class I, 1.5V	HSTL_I	50	0	V_{REF}	0.75
HSTL, class I, 1.8V	HSTL_I_18	50	0	V_{REF}	0.9
HSUL (high-speed unterminated logic), 1.2V	HSUL_12	50	0	V_{REF}	0.6
SSTL12 (stub series terminated logic), 1.2V	SSTL12	50	0	V_{REF}	0.6
SSTL135 and SSTL135 class II, 1.35V	SSTL135, SSTL135_II	50	0	V_{REF}	0.675
SSTL15 and SSTL15 class II, 1.5V	SSTL15, SSTL15_II	50	0	V_{REF}	0.75
SSTL18, class I and class II, 1.8V	SSTL18_I, SSTL18_II	50	0	V_{REF}	0.9
POD10, 1.0V	POD10	50	0	V_{REF}	1.0
POD12, 1.2V	POD12	50	0	V_{REF}	1.2
DIFF_HSTL, class I, 1.2V	DIFF_HSTL_I_12	50	0	V_{REF}	0.6
DIFF_HSTL, class I, 1.5V	DIFF_HSTL_I	50	0	V_{REF}	0.75
DIFF_HSTL, class I, 1.8V	DIFF_HSTL_I_18	50	0	V_{REF}	0.9
DIFF_HSUL, 1.2V	DIFF_HSUL_12	50	0	V_{REF}	0.6
DIFF_SSTL12, 1.2V	DIFF_SSTL12	50	0	V_{REF}	0.6
DIFF_SSTL135 and DIFF_SSTL135 class II, 1.35V	DIFF_SSTL135, DIFF_SSTL135_II	50	0	V_{REF}	0.675
DIFF_SSTL15 and DIFF_SSTL15 class II, 1.5V	DIFF_SSTL15, DIFF_SSTL15_II	50	0	V_{REF}	0.75
DIFF_SSTL18, class I and II, 1.8V	DIFF_SSTL18_I, DIFF_SSTL18_II	50	0	V_{REF}	0.9
DIFF_POD10, 1.0V	DIFF_POD10	50	0	V_{REF}	1.0
DIFF_POD12, 1.2V	DIFF_POD12	50	0	V_{REF}	1.2
LVDS (low-voltage differential signaling), 1.8V	LVDS	100	0	0[2]	0
SUB_LVDS, 1.8V	SUB_LVDS	100	0	0[2]	0
MIPI D-PHY (high speed) 1.2V	MIPI_DPHY_DCI_HS	100	0	0[2]	0
MIPI D-PHY (low power) 1.2V	MIPI_DPHY_DCI_LP	1M	0	0.6	0

Notes:

1. C_{REF} is the capacitance of the probe, nominally 0 pF.
2. The value given is the differential output voltage.

Block RAM and FIFO Switching Characteristics

Table 33: **Block RAM and FIFO Switching Characteristics**

Symbol	Description	Speed Grade and V_{CCINT} Operating Voltages				Units
		0.90V	0.85V		0.72V	
		-3	-2	-1	-2	
Maximum Frequency						
$F_{MAX_WF_NC}$	Block RAM (WRITE_FIRST and NO_CHANGE modes)	825	737	645	585	MHz
F_{MAX_RF}	Block RAM (READ_FIRST mode)	718	637	575	510	MHz
F_{MAX_FIFO}	FIFO in all modes without ECC	825	737	645	585	MHz
F_{MAX_ECC}	Block RAM and FIFO in ECC configuration without PIPELINE	718	637	575	510	MHz
	Block RAM and FIFO in ECC configuration with PIPELINE and Block RAM in WRITE_FIRST or NO_CHANGE mode	825	737	645	585	MHz
T_{PW}[1]	Minimum pulse width	495	542	543	577	ps
Block RAM and FIFO Clock-to-Out Delays						
T_{RCKO_DO}	Clock CLK to DOUT output (without output register)	0.91	1.02	1.11	1.46	ns, Max
$T_{RCKO_DO_REG}$	Clock CLK to DOUT output (with output register)	0.27	0.29	0.30	0.42	ns, Max

Notes:

1. The MMCM and PLL DUTY_CYCLE attribute should be set to 50% to meet the pulse-width requirements at the higher frequencies.

UltraRAM Switching Characteristics

The *UltraScale Architecture and Product Data Sheet: Overview* (DS890) lists the Virtex UltraScale+ FPGAs that include this memory.

Table 34: **UltraRAM Switching Characteristics**

Symbol	Description	Speed Grade and V_{CCINT} Operating Voltages				Units
		0.90V	0.85V		0.72V	
		-3	-2	-1	-2	
Maximum Frequency						
F_{MAX}	UltraRAM maximum frequency with OREG_B = True	650	600	575	500	MHz
$F_{MAX_ECC_NOPIPELINE}$	UltraRAM maximum frequency with OREG_B = False and EN_ECC_RD_B = True	435	400	386	312	MHz
$F_{MAX_NOPIPELINE}$	UltraRAM maximum frequency with OREG_B = False and EN_ECC_RD_B = False	528	500	478	404	MHz
T_{PW}[1]	Minimum pulse width	650	700	730	800	ps
T_{RSTPW}	Asynchronous reset minimum pulse width. One cycle required	1 clock cycle				

Notes:

1. The MMCM and PLL DUTY_CYCLE attribute should be set to 50% to meet the pulse-width requirements at the higher frequencies.

Input/Output Delay Switching Characteristics

Table 35: **Input/Output Delay Switching Characteristics**

Symbol	Description	Speed Grade and V_{CCINT} Operating Voltages				Units
		0.90V	0.85V		0.72V	
		-3	-2	-1	-2	
F_{REFCLK}	Reference clock frequency for IDELAYCTRL (component mode)	300 to 800				MHz
	Reference clock frequency when using BITSLICE_CONTROL with REFCLK (in native mode (for RX_BITSLICE only))	300 to 800				MHz
	Reference clock frequency for BITSLICE_CONTROL with PLL_CLK (in native mode)[1]	300 to 2666.67	300 to 2666.67	300 to 2400	300 to 2400	MHz
T_{MINPER_CLK}	Minimum period for IODELAY clock	3.195	3.195	3.195	3.195	ns
T_{MINPER_RST}	Minimum reset pulse width	52.00				ns
$T_{IDELAY_RESOLUTION}$/ $T_{ODELAY_RESOLUTION}$	IDELAY/ODELAY chain resolution	2.1 to 12				ps

Notes:

1. PLL settings could restrict the minimum allowable data rate. For example, when using a PLL with CLKOUTPHY_MODE = VCO_HALF, the minimum frequency is PLL_F_{VCOMIN}/2.

DSP48 Slice Switching Characteristics

Table 36: **DSP48 Slice Switching Characteristics**

Symbol	Description	Speed Grade and V_{CCINT} Operating Voltages				Units
		0.90V	0.85V		0.72V[1]	
		-3	-2	-1	-2	
Maximum Frequency						
F_{MAX}	With all registers used	891	775	645	644	MHz
F_{MAX_PATDET}	With pattern detector	794	687	571	562	MHz
$F_{MAX_MULT_NOMREG}$	Two register multiply without MREG	635	544	456	440	MHz
$F_{MAX_MULT_NOMREG_PATDET}$	Two register multiply without MREG with pattern detect	577	492	410	395	MHz
$F_{MAX_PREADD_NOADREG}$	Without ADREG	655	565	468	453	MHz
$F_{MAX_NOPIPELINEREG}$	Without pipeline registers (MREG, ADREG)	483	410	338	323	MHz
$F_{MAX_NOPIPELINEREG_PATDET}$	Without pipeline registers (MREG, ADREG) with pattern detect	448	379	314	299	MHz

Notes:

1. For devices operating at the lower power V_{CCINT} = 0.72V voltages, DSP cascades that cross the clock region center might operate below the specified F_{MAX}.

Clock Buffers and Networks

Table 37: **Clock Buffers Switching Characteristics**

Symbol	Description	Speed Grade and V_{CCINT} Operating Voltages				Units
		0.90V	0.85V		0.72V	
		-3	-2	-1	-2	
Global Clock Switching Characteristics (Including BUFGCTRL)						
F_{MAX}	Maximum frequency of a global clock tree (BUFG)	891	775	667	725	MHz
Global Clock Buffer with Input Divide Capability (BUFGCE_DIV)						
F_{MAX}	Maximum frequency of a global clock buffer with input divide capability (BUFGCE_DIV)	891	775	667	725	MHz
Global Clock Buffer with Clock Enable (BUFGCE)						
F_{MAX}	Maximum frequency of a global clock buffer with clock enable (BUFGCE)	891	775	667	725	MHz
Leaf Clock Buffer with Clock Enable (BUFCE_LEAF)						
F_{MAX}	Maximum frequency of a leaf clock buffer with clock enable (BUFCE_LEAF)	891	775	667	725	MHz
GTY or GTM Clock Buffer with Clock Enable and Clock Input Divide Capability (BUFG_GT)						
F_{MAX}	Maximum frequency of a serial transceiver clock buffer with clock enable and clock input divide capability	512	512	512	512	MHz

MMCM Switching Characteristics

Table 38: **MMCM Specification**

Symbol	Description	Speed Grade and V_{CCINT} Operating Voltages				Units
		0.90V	0.85V		0.72V	
		-3	-2	-1	-2	
$MMCM_F_{INMAX}$	Maximum input clock frequency	1066	933	800	933	MHz
$MMCM_F_{INMIN}$	Minimum input clock frequency	10	10	10	10	MHz
$MMCM_F_{INJITTER}$	Maximum input clock period jitter	< 20% of clock input period or 1 ns Max				
$MMCM_F_{INDUTY}$	Input duty cycle range: 10–49 MHz	25–75				%
	Input duty cycle range: 50–199 MHz	30–70				%
	Input duty cycle range: 200–399 MHz	35–65				%
	Input duty cycle range: 400–499 MHz	40–60				%
	Input duty cycle range: >500 MHz	45–55				%
$MMCM_F_{MIN_PSCLK}$	Minimum dynamic phase shift clock frequency	0.01	0.01	0.01	0.01	MHz
$MMCM_F_{MAX_PSCLK}$	Maximum dynamic phase shift clock frequency	550	500	450	500	MHz
$MMCM_F_{VCOMIN}$	Minimum MMCM VCO frequency	800	800	800	800	MHz
$MMCM_F_{VCOMAX}$	Maximum MMCM VCO frequency	1600	1600	1600	1600	MHz
$MMCM_F_{BANDWIDTH}$	Low MMCM bandwidth at typical[1]	1.00	1.00	1.00	1.00	MHz
	High MMCM bandwidth at typical[1]	4.00	4.00	4.00	4.00	MHz
$MMCM_T_{STATPHAOFFSET}$	Static phase offset of the MMCM outputs[2]	0.12	0.12	0.12	0.12	ns
$MMCM_T_{OUTJITTER}$	MMCM output jitter	Note 3				
$MMCM_T_{OUTDUTY}$	MMCM output clock duty cycle precision[4]	0.165	0.20	0.20	0.20	ns
$MMCM_T_{LOCKMAX}$	MMCM maximum lock time for $MMCM_F_{PFDMIN}$	100	100	100	100	µs
$MMCM_F_{OUTMAX}$	MMCM maximum output frequency	891	775	667	725	MHz
$MMCM_F_{OUTMIN}$	MMCM minimum output frequency[4, 5]	6.25	6.25	6.25	6.25	MHz
$MMCM_T_{EXTFDVAR}$	External clock feedback variation	< 20% of clock input period or 1 ns Max				
$MMCM_RST_{MINPULSE}$	Minimum reset pulse width	5.00	5.00	5.00	5.00	ns
$MMCM_F_{PFDMAX}$	Maximum frequency at the phase frequency detector	550	500	450	500	MHz
$MMCM_F_{PFDMIN}$	Minimum frequency at the phase frequency detector	10	10	10	10	MHz
$MMCM_T_{FBDELAY}$	Maximum delay in the feedback path	5 ns Max or one clock cycle				
$MMCM_F_{DPRCLK_MAX}$	Maximum DRP clock frequency	250	250	250	250	MHz

Notes:

1. The MMCM does not filter typical spread-spectrum input clocks because they are usually far below the bandwidth filter frequencies.
2. The static offset is measured between any MMCM outputs with identical phase.
3. Values for this parameter are available in the Clocking Wizard.
4. Includes global clock buffer.
5. Calculated as $F_{VCO}/128$ assuming output duty cycle is 50%.

PLL Switching Characteristics

Table 39: **PLL Specification**

Symbol	Description[1]	Speed Grade and V_{CCINT} Operating Voltages				Units
		0.90V	0.85V		0.72V	
		-3	-2	-1	-2	
PLL_F_{INMAX}	Maximum input clock frequency	1066	933	800	933	MHz
PLL_F_{INMIN}	Minimum input clock frequency	70	70	70	70	MHz
$PLL_F_{INJITTER}$	Maximum input clock period jitter	< 20% of clock input period or 1 ns Max				
PLL_F_{INDUTY}	Input duty cycle range: 70–399 MHz	35–65				%
	Input duty cycle range: 400–499 MHz	40–60				%
	Input duty cycle range: >500 MHz	45–55				%
PLL_F_{VCOMIN}	Minimum PLL VCO frequency	750	750	750	750	MHz
PLL_F_{VCOMAX}	Maximum PLL VCO frequency	1500	1500	1500	1500	MHz
$PLL_T_{STATPHAOFFSET}$	Static phase offset of the PLL outputs[2]	0.12	0.12	0.12	0.12	ns
$PLL_T_{OUTJITTER}$	PLL output jitter	Note 3				
$PLL_T_{OUTDUTY}$	PLL CLKOUT0, CLKOUT0B, CLKOUT1, CLKOUT1B duty-cycle precision[4]	0.165	0.20	0.20	0.20	ns
$PLL_T_{LOCKMAX}$	PLL maximum lock time	100				µs
PLL_F_{OUTMAX}	PLL maximum output frequency at CLKOUT0, CLKOUT0B, CLKOUT1, CLKOUT1B	891	775	667	725	MHz
	PLL maximum output frequency at CLKOUTPHY	2667	2667	2400	2400	MHz
PLL_F_{OUTMIN}	PLL minimum output frequency at CLKOUT0, CLKOUT0B, CLKOUT1, CLKOUT1B[5]	5.86	5.86	5.86	5.86	MHz
	PLL minimum output frequency at CLKOUTPHY	2 x VCO mode: 1500, 1 x VCO mode: 750, 0.5 x VCO mode: 375				MHz
$PLL_RST_{MINPULSE}$	Minimum reset pulse width	5.00	5.00	5.00	5.00	ns
PLL_F_{PFDMAX}	Maximum frequency at the phase frequency detector	667.5	667.5	667.5	667.5	MHz
PLL_F_{PFDMIN}	Minimum frequency at the phase frequency detector	70	70	70	70	MHz
$PLL_F_{BANDWIDTH}$	PLL bandwidth at typical	14	14	14	14	MHz
$PLL_F_{DPRCLK_MAX}$	Maximum DRP clock frequency	250	250	250	250	MHz

Notes:

1. The PLL does not filter typical spread-spectrum input clocks because they are usually far below the loop filter frequencies.
2. The static offset is measured between any PLL outputs with identical phase.
3. Values for this parameter are available in the Clocking Wizard.
4. Includes global clock buffer.
5. Calculated as $F_{VCO}/128$ assuming output duty cycle is 50%.

Device Pin-to-Pin Output Parameter Guidelines

The pin-to-pin numbers in the following tables are based on the clock root placement in the center of the device. The actual pin-to-pin values will vary if the root placement selected is different. Consult the Vivado Design Suite timing report for the actual pin-to-pin values.

Table 40: **Global Clock Input to Output Delay Without MMCM (Near Clock Region)**

Symbol	Description[1]	Device	Speed Grade and V_{CCINT} Operating Voltages				Units
			0.90V	0.85V		0.72V	
			-3	-2	-1	-2	
SSTL15 Global Clock Input to Output Delay using Output Flip-Flop, Fast Slew Rate, *without* MMCM							
T_{ICKOF}	Global clock input and output flip-flop *without* MMCM (near clock region)	XCVU3P	4.41	4.77	5.09	5.48	ns
		XCVU5P	4.41	4.77	5.09	5.48	ns
		XCVU7P	4.41	4.77	5.09	5.48	ns
		XCVU9P	4.41	4.77	5.09	5.48	ns
		XCVU11P	4.22	4.59	4.90	5.27	ns
		XCVU13P	4.22	4.59	4.90	5.27	ns
		XCVU19P	N/A	6.24	6.84	N/A	ns
		XCVU27P	4.22	4.59	4.90	5.27	ns
		XCVU29P	4.22	4.59	4.90	5.27	ns
		XCVU31P	4.22	4.59	4.90	5.27	ns
		XCVU33P	4.22	4.59	4.90	5.27	ns
		XCVU35P	4.22	4.59	4.90	5.27	ns
		XCVU37P	4.22	4.59	4.90	5.27	ns
		XCVU45P	4.22	4.59	4.90	5.27	ns
		XCVU47P	4.22	4.59	4.90	5.27	ns
		XQVU3P	N/A	4.77	5.09	5.48	ns
		XQVU7P	N/A	4.77	5.09	5.48	ns
		XQVU11P	N/A	4.59	4.90	5.27	ns

Notes:

1. This table lists representative values where one global clock input drives one vertical clock line in each accessible column, and where all accessible I/O and CLB flip-flops are clocked by the global clock net in a single SLR.

Table 41: **Global Clock Input to Output Delay Without MMCM (Far Clock Region)**

Symbol	Description[1]	Device	Speed Grade and V_{CCINT} Operating Voltages				Units
			0.90V	0.85V		0.72V	
			-3	-2	-1	-2	
SSTL15 Global Clock Input to Output Delay using Output Flip-Flop, Fast Slew Rate, *without* MMCM							
T_{ICKOF_FAR}	Global clock input and output flip-flop *without* MMCM (far clock region)	XCVU3P	4.90	5.33	5.69	6.24	ns
		XCVU5P	4.90	5.33	5.69	6.24	ns
		XCVU7P	4.90	5.33	5.69	6.24	ns
		XCVU9P	4.90	5.33	5.69	6.24	ns
		XCVU11P	4.40	4.79	5.11	5.54	ns
		XCVU13P	4.40	4.79	5.11	5.54	ns
		XCVU19P	N/A	7.36	8.02	N/A	ns
		XCVU27P	4.40	4.79	5.11	5.54	ns
		XCVU29P	4.40	4.79	5.11	5.54	ns
		XCVU31P	4.40	4.79	5.11	5.54	ns
		XCVU33P	4.40	4.79	5.11	5.54	ns
		XCVU35P	4.40	4.79	5.11	5.54	ns
		XCVU37P	4.40	4.79	5.11	5.54	ns
		XCVU45P	4.40	4.79	5.11	5.54	ns
		XCVU47P	4.40	4.79	5.11	5.54	ns
		XQVU3P	N/A	5.33	5.69	6.24	ns
		XQVU7P	N/A	5.33	5.69	6.24	ns
		XQVU11P	N/A	4.79	5.11	5.54	ns

Notes:

1. This table lists representative values where one global clock input drives one vertical clock line in each accessible column, and where all accessible I/O and CLB flip-flops are clocked by the global clock net in a single SLR.

Table 42: **Global Clock Input to Output Delay With MMCM**

Symbol	Description[1, 2]	Device	Speed Grade and V_{CCINT} Operating Voltages				Units
			0.90V	0.85V		0.72V	
			-3	-2	-1	-2	
SSTL15 Global Clock Input to Output Delay using Output Flip-Flop, Fast Slew Rate, *with* MMCM							
$T_{ICKOFMMCMCC}$	Global clock input and output flip-flop *with* MMCM	XCVU3P	1.51	1.80	1.94	1.80	ns
		XCVU5P	1.51	1.80	1.94	1.80	ns
		XCVU7P	1.51	1.80	1.94	1.80	ns
		XCVU9P	1.51	1.80	1.94	1.80	ns
		XCVU11P	1.29	1.56	1.68	1.56	ns
		XCVU13P	1.29	1.56	1.68	1.56	ns
		XCVU19P	N/A	2.35	2.58	N/A	ns
		XCVU27P	1.29	1.56	1.68	1.56	ns
		XCVU29P	1.29	1.56	1.68	1.56	ns
		XCVU31P	1.29	1.56	1.68	1.56	ns
		XCVU33P	1.29	1.56	1.68	1.56	ns
		XCVU35P	1.29	1.56	1.68	1.56	ns
		XCVU37P	1.29	1.56	1.68	1.56	ns
		XCVU45P	1.29	1.56	1.68	1.56	ns
		XCVU47P	1.29	1.56	1.68	1.56	ns
		XQVU3P	N/A	1.80	1.94	1.80	ns
		XQVU7P	N/A	1.80	1.94	1.80	ns
		XQVU11P	N/A	1.56	1.68	1.56	ns

Notes:

1. This table lists representative values where one global clock input drives one vertical clock line in each accessible column, and where all accessible I/O and CLB flip-flops are clocked by the global clock net in a single SLR.
2. MMCM output jitter is already included in the timing calculation.

Table 43: **Source Synchronous Output Characteristics (Component Mode)**

Description	Speed Grade and V_{CCINT} Operating Voltages				Units
	0.90V	0.85V		0.72V	
	-3	-2	-1	-2	
$T_{OUTPUT_LOGIC_DELAY_VARIATION}$[1]	80				ps

Notes:

1. Delay mismatch across a transmit bus when using component mode output logic (ODDRE1, OSERDESE3) within a bank.

Device Pin-to-Pin Input Parameter Guidelines

The pin-to-pin numbers in the following table are based on the clock root placement in the center of the device. The actual pin-to-pin values will vary if the root placement selected is different. Consult the Vivado Design Suite timing report for the actual pin-to-pin values.

Table 44: **Global Clock Input Setup and Hold With MMCM**

Symbol	Description		Device	Speed Grade and V_{CCINT} Operating Voltages				Units
				0.90V	0.85V		0.72V	
				-3	-2	-1	-2	
Input Setup and Hold Time Relative to Global Clock Input Signal using SSTL15 Standard.[1, 2, 3]								
$T_{PSMMCMCC_VU3P}$	Global clock input and input flip-flop (or latch) with MMCM	Setup	XCVU3P	1.86	1.86	1.99	1.86	ns
$T_{PHMMCMCC_VU3P}$		Hold		–0.13	–0.13	–0.13	–0.17	ns
$T_{PSMMCMCC_VU5P}$		Setup	XCVU5P	1.86	1.86	1.99	1.86	ns
$T_{PHMMCMCC_VU5P}$		Hold		–0.13	–0.13	–0.13	–0.17	ns
$T_{PSMMCMCC_VU7P}$		Setup	XCVU7P	1.86	1.86	1.99	1.86	ns
$T_{PHMMCMCC_VU7P}$		Hold		–0.13	–0.13	–0.13	–0.17	ns
$T_{PSMMCMCC_VU9P}$		Setup	XCVU9P	1.86	1.86	1.99	1.86	ns
$T_{PHMMCMCC_VU9P}$		Hold		–0.13	–0.13	–0.13	–0.17	ns
$T_{PSMMCMCC_VU11P}$		Setup	XCVU11P	1.91	1.92	2.05	1.92	ns
$T_{PHMMCMCC_VU11P}$		Hold		–0.13	–0.13	–0.13	–0.18	ns
$T_{PSMMCMCC_VU13P}$		Setup	XCVU13P	1.91	1.92	2.05	1.92	ns
$T_{PHMMCMCC_VU13P}$		Hold		–0.13	–0.13	–0.13	–0.18	ns
$T_{PSMMCMCC_VU19P}$		Setup	XCVU19P	N/A	1.97	2.11	N/A	ns
$T_{PHMMCMCC_VU19P}$		Hold		N/A	–0.11	–0.11	N/A	ns
$T_{PSMMCMCC_VU27P}$		Setup	XCVU27P	1.91	1.92	2.05	1.92	ns
$T_{PHMMCMCC_VU27P}$		Hold		–0.13	–0.13	–0.13	–0.18	ns
$T_{PSMMCMCC_VU29P}$		Setup	XCVU29P	1.91	1.92	2.05	1.92	ns
$T_{PHMMCMCC_VU29P}$		Hold		–0.13	–0.13	–0.13	–0.18	ns
$T_{PSMMCMCC_VU31P}$		Setup	XCVU31P	1.91	1.92	2.05	1.92	ns
$T_{PHMMCMCC_VU31P}$		Hold		–0.13	–0.13	–0.13	–0.18	ns
$T_{PSMMCMCC_VU33P}$		Setup	XCVU33P	1.91	1.92	2.05	1.92	ns
$T_{PHMMCMCC_VU33P}$		Hold		–0.13	–0.13	–0.13	–0.18	ns
$T_{PSMMCMCC_VU35P}$		Setup	XCVU35P	1.91	1.92	2.05	1.92	ns
$T_{PHMMCMCC_VU35P}$		Hold		–0.13	–0.13	–0.13	–0.18	ns
$T_{PSMMCMCC_VU37P}$		Setup	XCVU37P	1.91	1.92	2.05	1.92	ns
$T_{PHMMCMCC_VU37P}$		Hold		–0.13	–0.13	–0.13	–0.18	ns

Table 44: **Global Clock Input Setup and Hold With MMCM** *(cont'd)*

Symbol	Description		Device	Speed Grade and V_{CCINT} Operating Voltages				Units
				0.90V	0.85V		0.72V	
				-3	-2	-1	-2	
$T_{PSMMCMCC_VU45P}$	Global clock input and input flip-flop (or latch) with MMCM (*cont'd*)	Setup	XCVU45P	1.91	1.92	2.05	1.92	ns
$T_{PHMMCMCC_VU45P}$		Hold		–0.13	–0.13	–0.13	–0.18	ns
$T_{PSMMCMCC_VU47P}$		Setup	XCVU47P	1.91	1.92	2.05	1.92	ns
$T_{PHMMCMCC_VU47P}$		Hold		–0.13	–0.13	–0.13	–0.18	ns
$T_{PSMMCMCC_XQVU3P}$		Setup	XQVU3P	N/A	1.86	1.99	1.86	ns
$T_{PHMMCMCC_XQVU3P}$		Hold		N/A	–0.13	–0.13	–0.17	ns
$T_{PSMMCMCC_XQVU7P}$		Setup	XQVU7P	N/A	1.86	1.99	1.86	ns
$T_{PHMMCMCC_XQVU7P}$		Hold		N/A	–0.13	–0.13	–0.17	ns
$T_{PSMMCMCC_XQVU11P}$		Setup	XQVU11P	N/A	1.92	2.05	1.92	ns
$T_{PHMMCMCC_XQVU11P}$		Hold		N/A	–0.13	–0.13	–0.18	ns

Notes:

1. Setup and hold times are measured over worst case conditions (process, voltage, temperature). Setup time is measured relative to the global clock input signal using the slowest process, slowest temperature, and slowest voltage. Hold time is measured relative to the global clock input signal using the fastest process, fastest temperature, and fastest voltage.
2. This table lists representative values where one global clock input drives one vertical clock line in each accessible column, and where all accessible I/O and CLB flip-flops are clocked by the global clock net in a single SLR.
3. Use IBIS to determine any duty-cycle distortion incurred using various standards.

Table 45: **Sampling Window**

Description	Speed Grade and V_{CCINT} Operating Voltages				Units
	0.90V	0.85V		0.72V	
	-3	-2	-1	-2	
T_{SAMP_BUFG}[1]	510	610	610	610	ps
$T_{SAMP_NATIVE_DPA}$[2]	100	100	125	125	ps
$T_{SAMP_NATIVE_BISC}$[3]	60	60	85	85	ps

Notes:

1. This parameter indicates the total sampling error of the Virtex UltraScale+ FPGA DDR input registers, measured across voltage, temperature, and process. The characterization methodology uses the MMCM to capture the DDR input registers' edges of operation. These measurements include: CLK0 MMCM jitter, MMCM accuracy (phase offset), and MMCM phase shift resolution. These measurements do not include package or clock tree skew.
2. This parameter is the receive sampling error for RX_BITSLICE when using dynamic phase alignment.
3. This parameter is the receive sampling error for RX_BITSLICE when using built-in self-calibration (BISC).

Table 46: **Input Logic Characteristics for Dynamic Phase Aligned Applications (Component Mode)**

Description	Speed Grade and V_{CCINT} Operating Voltages				Units
	0.90V	0.85V		0.72V	
	-3	-2	-1	-2	
$T_{INPUT_LOGIC_UNCERTAINTY}$[1]	40				ps
T_{CAL_ERROR}[2]	24				ps

Notes:

1. Input_logic_uncertainty accounts for the setup/hold and any pattern dependent jitter for the input logic (input register, IDDRE1, or ISERDESE3).
2. Calibration error associated with quantization effects based on the IDELAY resolution. Calibration must be performed for each input pin to ensure optimal performance.

Package Parameter Guidelines

The parameters in this section provide the necessary values for calculating timing budgets for clock transmitter and receiver data-valid windows.

Table 47: **Package Skew**

Symbol	Description	Device	Package	Value	Units
PKGSKEW	Package Skew[1, 2]	XCVU3P	FFVC1517	197	ps
		XCVU5P	FLVA2104	175	ps
			FLVB2104	225	ps
			FLVC2104	216	ps
		XCVU7P	FLVA2104	175	ps
			FLVB2104	225	ps
			FLVC2104	216	ps
		XCVU9P	FLGA2104	217	ps
			FLGB2104	275	ps
			FLGC2104	299	ps
			FSGD2104	229	ps
			FLGA2577	149	ps
		XCVU11P	FLGF1924	180	ps
			FLGB2104	216	ps
			FLGC2104	175	ps
			FSGD2104	224	ps
			FLGA2577	154	ps
		XCVU13P	FHGA2104	215	ps
			FHGB2104	259	ps
			FHGC2104	182	ps
			FIGD2104	198	ps
			FLGA2577	140	ps
		XCVU19P	FSVA3824	323	ps
			FSVB3824	246	ps
		XCVU27P	FIGD2104	198	ps
			FSGA2577	139	ps
		XCVU29P	FIGD2104	198	ps
			FSGA2577	139	ps
		XCVU31P	FSVH1924	165	ps
		XCVU33P	FSVH2104	194	ps
		XCVU35P	FSVH2104	200	ps
			FSVH2892	241	ps
		XCVU37P	FSVH2892	278	ps
		XCVU45P	FSVH2104	200	ps
			FSVH2892	241	ps
		XCVU47P	FSVH2892	278	ps
		XQVU3P	FFRC1517	176	ps
		XQVU7P	FLRA2104	175	ps
			FLRB2104	224	ps
		XQVU11P	FLRC2104	174	ps

Notes:

1. These values represent the worst-case skew between any two SelectIO resources in the package: shortest delay to longest delay from die pad to ball.
2. Package delay information is available for these device/package combinations. This information can be used to deskew the package.

GTY Transceiver Specifications

The *UltraScale Architecture and Product Data Sheet: Overview* (DS890) lists the Virtex UltraScale+ FPGAs that include the GTY transceivers.

GTY Transceiver DC Input and Output Levels

Table 48 summarizes the DC specifications of the GTY transceivers in Virtex UltraScale+ FPGAs. Consult the *UltraScale Architecture GTY Transceivers User Guide* (UG578) for further details.

Table 48: **GTY Transceiver DC Specifications**

Symbol	DC Parameter	Conditions	Min	Typ	Max	Units
DV_{PPIN}	Differential peak-to-peak input voltage (external AC coupled)	>10.3125 Gb/s	150	–	1250	mV
		6.6 Gb/s to 10.3125 Gb/s	150	–	1250	mV
		≤ 6.6 Gb/s	150	–	2000	mV
V_{IN}	Single-ended input voltage. Voltage measured at the pin referenced to GND.	DC coupled $V_{MGTAVTT}$ = 1.2V	–400	–	$V_{MGTAVTT}$	mV
V_{CMIN}	Common mode input voltage	DC coupled $V_{MGTAVTT}$ = 1.2V	–	2/3 $V_{MGTAVTT}$	–	mV
D_{VPPOUT}	Differential peak-to-peak output voltage[1]	Transmitter output swing is set to `11111`	800	–	–	mV
$V_{CMOUTDC}$	Common mode output voltage: DC coupled (equation based)	When remote RX is terminated to GND	$V_{MGTAVTT}/2 - D_{VPPOUT}/4$			mV
		When remote RX termination is floating	$V_{MGTAVTT} - D_{VPPOUT}/2$			mV
		When remote RX is terminated to V_{RX_TERM}[2]	$V_{MGTAVTT} - \frac{D_{VPPOUT}}{4} - \left(\frac{V_{MGTAVTT} - V_{RX_TERM}}{2}\right)$			mV
$V_{CMOUTAC}$	Common mode output voltage: AC coupled	Equation based	$V_{MGTAVTT} - D_{VPPOUT}/2$			mV
R_{IN}	Differential input resistance		–	100	–	Ω
R_{OUT}	Differential output resistance		–	100	–	Ω
T_{OSKEW}	Transmitter output pair (TXP and TXN) intra-pair skew		–	–	10	ps
C_{EXT}	Recommended external AC coupling capacitor[3]		–	100	–	nF

Notes:

1. The output swing and pre-emphasis levels are programmable using the GTY transceiver attributes discussed in the *UltraScale Architecture GTY Transceivers User Guide* (UG578) and can result in values lower than reported in this table.
2. V_{RX_TERM} is the remote RX termination voltage.
3. Other values can be used as appropriate to conform to specific protocols and standards.

Figure 3: **Single-Ended Peak-to-Peak Voltage**

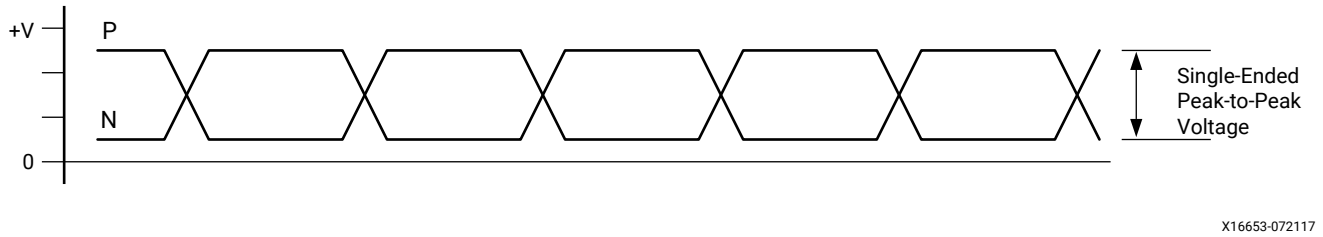

Figure 4: **Differential Peak-to-Peak Voltage**

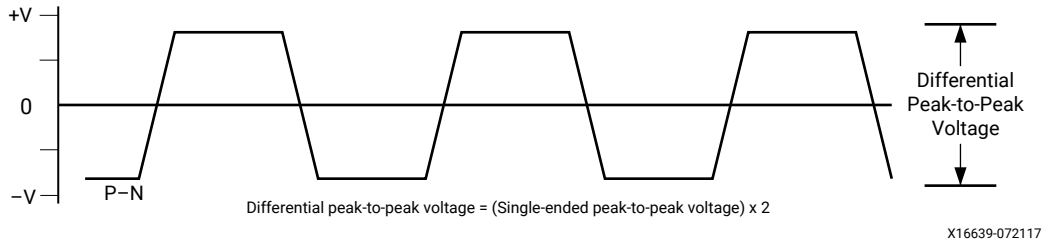

The following tables summarize the DC specifications of the clock input/output levels of the GTY transceivers in Virtex UltraScale+ FPGAs. Consult the *UltraScale Architecture GTY Transceivers User Guide* (UG578) for further details.

Table 49: **GTY Transceiver Clock DC Input Level Specification**

Symbol	DC Parameter	Min	Typ	Max	Units
V_{IDIFF}	Differential peak-to-peak input voltage	250	–	2000	mV
R_{IN}	Differential input resistance	–	100	–	Ω
C_{EXT}	Required external AC coupling capacitor	–	10	–	nF

Table 50: **GTY Transceiver Clock Output Level Specification**

Symbol	Description	Conditions	Min	Typ	Max	Units
V_{OL}	Output Low voltage for P and N	R_T = 100Ω across P and N signals	100	–	330	mV
V_{OH}	Output High voltage for P and N	R_T = 100Ω across P and N signals	500	–	700	mV
V_{DDOUT}	Differential output voltage (P–N), P = High (N–P), N = High	R_T = 100Ω across P and N signals	300	–	430	mV
V_{CMOUT}	Common mode voltage	R_T = 100Ω across P and N signals	300	–	500	mV

GTY Transceiver Switching Characteristics

Consult the *UltraScale Architecture GTY Transceivers User Guide* (UG578) for further information.

Table 51: **GTY Transceiver Performance**

Symbol	Description	Output Divider	Speed Grade and V_{CCINT} Operating Voltages				Units
			0.90V	0.85V		0.72V	
			-3	-2	-1	-2	
F_{GTYMAX}	GTY maximum line rate		32.75[1]	28.21[1]	25.785[1]	28.21[1]	Gb/s
F_{GTYMIN}	GTY minimum line rate		0.5	0.5	0.5	0.5	Gb/s

Table 51: **GTY Transceiver Performance** *(cont'd)*

Symbol	Description	Output Divider	Speed Grade and V_{CCINT} Operating Voltages								Units
			0.90V		0.85V				0.72V		
			-3		-2		-1		-2		
			Min	Max	Min	Max	Min	Max	Min	Max	
$F_{GTYCRANGE}$	CPLL line rate range[2]	1	4.0	12.5	4.0	12.5	4.0	8.5	4.0	12.5	Gb/s
		2	2.0	6.25	2.0	6.25	2.0	4.25	2.0	6.25	Gb/s
		4	1.0	3.125	1.0	3.125	1.0	2.125	1.0	3.125	Gb/s
		8	0.5	1.5625	0.5	1.5625	0.5	1.0625	0.5	1.5625	Gb/s
		16	N/A								Gb/s
		32	N/A								Gb/s
			Min	Max	Min	Max	Min	Max	Min	Max	
$F_{GTYQRANGE1}$	QPLL0 line rate range[3]	1	19.6	32.75	19.6	28.21	19.6	25.785	19.6	28.21	Gb/s
		1	9.8	16.375	9.8	16.375	9.8	16.375	9.8	16.375	Gb/s
		2	4.9	8.1875	4.9	8.1875	4.9	8.1875	4.9	8.1875	Gb/s
		4	2.45	4.0938	2.45	4.0938	2.45	4.0938	2.45	4.0938	Gb/s
		8	1.225	2.0469	1.225	2.0469	1.225	2.0469	1.225	2.0469	Gb/s
		16	0.6125	1.0234	0.6125	1.0234	0.6125	1.0234	0.6125	1.0234	Gb/s
			Min	Max	Min	Max	Min	Max	Min	Max	
$F_{GTYQRANGE2}$	QPLL1 line rate range[4]	1	16.0	26.0	16.0	26.0	16.0	25.785	16.0	26.0	Gb/s
		1	8.0	13.0	8.0	13.0	8.0	12.5	8.0	13.0	Gb/s
		2	4.0	6.5	4.0	6.5	4.0	6.5	4.0	6.5	Gb/s
		4	2.0	3.25	2.0	3.25	2.0	3.25	2.0	3.25	Gb/s
		8	1.0	1.625	1.0	1.625	1.0	1.625	1.0	1.625	Gb/s
		16	0.5	0.8125	0.5	0.8125	0.5	0.8125	0.5	0.8125	Gb/s
			Min	Max	Min	Max	Min	Max	Min	Max	
$F_{CPLLRANGE}$	CPLL frequency range		2.0	6.25	2.0	6.25	2.0	4.25	2.0	6.25	GHz
$F_{QPLL0RANGE}$	QPLL0 frequency range		9.8	16.375	9.8	16.375	9.8	16.375	9.8	16.375	GHz
$F_{QPLL1RANGE}$	QPLL1 frequency range		8.0	13.0	8.0	13.0	8.0	13.0	8.0	13.0	GHz

Notes:

1. XCVU11P devices in the FLGF1924 package have a maximum GTY transceiver line rate of 16.3 Gb/s.
2. The values listed are the rounded results of the calculated equation (2 × CPLL_Frequency)/Output_Divider.
3. The values listed are the rounded results of the calculated equation (QPLL0_Frequency × RATE)/Output_Divider where RATE is 1 when QPLL0_CLKOUT_RATE is set to HALF and 2 if QPLL0_CLKOUT_RATE is set to FULL.
4. The values listed are the rounded results of the calculated equation (QPLL1_Frequency × RATE)/Output_Divider where RATE is 1 when QPLL1_CLKOUT_RATE is set to HALF and 2 if QPLL1_CLKOUT_RATE is set to FULL.

Table 52: **GTY Transceiver Dynamic Reconfiguration Port (DRP) Switching Characteristics**

Symbol	Description	All Speed Grades	Units
$F_{GTYDRPCLK}$	GTYDRPCLK maximum frequency	250	MHz

Table 53: **GTY Transceiver Reference Clock Switching Characteristics**

Symbol	Description	Conditions	All Speed Grades			Units
			Min	Typ	Max	
F_{GCLK}	Reference clock frequency range		60	–	820	MHz
T_{RCLK}	Reference clock rise time	20% – 80%	–	200	–	ps
T_{FCLK}	Reference clock fall time	80% – 20%	–	200	–	ps
T_{DCREF}	Reference clock duty cycle	Transceiver PLL only	40	50	60	%

Table 54: **GTY Transceiver Reference Clock Oscillator Selection Phase Noise Mask**

Symbol	Description[1, 2]	Offset Frequency	Min	Typ	Max	Units
$QPLL_{REFCLKMASK}$	QPLL0/QPLL1 reference clock select phase noise mask at REFCLK frequency = 156.25 MHz	10 kHz	–	–	–112	dBc/Hz
		100 kHz	–	–	–128	
		1 MHz	–	–	–145	
	QPLL0/QPLL1 reference clock select phase noise mask at REFCLK frequency = 312.5 MHz	10 kHz	–	–	–103	dBc/Hz
		100 kHz	–	–	–123	
		1 MHz	–	–	–143	
	QPLL0/QPLL1 reference clock select phase noise mask at REFCLK frequency = 625 MHz	10 kHz	–	–	–98	dBc/Hz
		100 kHz	–	–	–117	
		1 MHz	–	–	–140	
$CPLL_{REFCLKMASK}$	CPLL reference clock select phase noise mask at REFCLK frequency = 156.25 MHz	10 kHz	–	–	–112	dBc/Hz
		100 kHz	–	–	–128	
		1 MHz	–	–	–145	
		50 MHz	–	–	–145	
	CPLL reference clock select phase noise mask at REFCLK frequency = 312.5 MHz	10 kHz	–	–	–103	dBc/Hz
		100 kHz	–	–	–123	
		1 MHz	–	–	–143	
		50 MHz	–	–	–145	
	CPLL reference clock select phase noise mask at REFCLK frequency = 625 MHz	10 kHz	–	–	–98	dBc/Hz
		100 kHz	–	–	–117	
		1 MHz	–	–	–140	
		50 MHz	–	–	–144	

Notes:

1. For reference clock frequencies not in this table, use the phase-noise mask for the nearest reference clock frequency.
2. This reference clock phase-noise mask is superseded by any reference clock phase-noise mask that is specified in a supported protocol, e.g., PCIe.

Table 55: **GTY Transceiver PLL/Lock Time Adaptation**

Symbol	Description	Conditions	All Speed Grades			Units
			Min	Typ	Max	
T_{LOCK}	Initial PLL lock.		–	–	1	ms
T_{DLOCK}	Clock recovery phase acquisition and adaptation time for decision feedback equalizer (DFE)	After the PLL is locked to the reference clock, this is the time it takes to lock the clock data recovery (CDR) to the data present at the input.	–	50,000	37×10^6	UI
	Clock recovery phase acquisition and adaptation time for low-power mode (LPM) when the DFE is disabled		–	50,000	2.3×10^6	UI

Table 56: **GTY Transceiver User Clock Switching Characteristics**

Symbol	Description[1]	Data Width Conditions (Bit)		Speed Grade and V_{CCINT} Operating Voltages				Units
				0.90V	0.85V		0.72V	
		Internal Logic	Interconnect Logic	-3	-2	-1[2]	-2	
$F_{TXOUTPMA}$	TXOUTCLK maximum frequency sourced from OUTCLKPMA			511.719	511.719	402.891	402.832	MHz
$F_{RXOUTPMA}$	RXOUTCLK maximum frequency sourced from OUTCLKPMA			511.719	511.719	402.891	402.832	MHz
$F_{TXOUTPROGDIV}$	TXOUTCLK maximum frequency sourced from TXPROGDIVCLK			511.719	511.719	511.719	511.719	MHz
$F_{RXOUTPROGDIV}$	RXOUTCLK maximum frequency sourced from RXPROGDIVCLK			511.719	511.719	511.719	511.719	MHz
F_{TXIN}	TXUSRCLK[3] maximum frequency	16	16, 32	511.719	511.719	390.625	390.625	MHz
		32	32, 64	511.719	511.719	390.625	390.625	MHz
		64	64, 128	511.719	440.781	402.891	402.832	MHz
		20	20, 40	409.375	409.375	312.500	312.500	MHz
		40	40, 80	409.375	409.375	312.500	350.000	MHz
		80	80, 160	409.375	352.625	322.313	352.625	MHz
F_{RXIN}	RXUSRCLK[3] maximum frequency	16	16, 32	511.719	511.719	390.625	390.625	MHz
		32	32, 64	511.719	511.719	390.625	390.625	MHz
		64	64, 128	511.719	440.781	402.891	402.832	MHz
		20	20, 40	409.375	409.375	312.500	312.500	MHz
		40	40, 80	409.375	409.375	312.500	350.000	MHz
		80	80, 160	409.375	352.625	322.313	352.625	MHz

Table 56: **GTY Transceiver User Clock Switching Characteristics** *(cont'd)*

Symbol	Description[1]	Data Width Conditions (Bit)		Speed Grade and V_{CCINT} Operating Voltages				Units
				0.90V	0.85V		0.72V	
		Internal Logic	Interconnect Logic	-3	-2	-1[2]	-2	
F_{TXIN2}	TXUSRCLK2[3] maximum frequency	16	16	511.719	511.719	390.625	390.625	MHz
		16	32	255.859	255.859	195.313	195.313	MHz
		32	32	511.719	511.719	390.625	390.625	MHz
		32	64	255.859	255.859	195.313	195.313	MHz
		64	64	511.719	440.781	402.891	402.832	MHz
		64	128	255.859	220.391	201.445	201.416	MHz
		20	20	409.375	409.375	312.500	312.500	MHz
		20	40	204.688	204.688	156.250	156.250	MHz
		40	40	409.375	409.375	312.500	350.000	MHz
		40	80	204.688	204.688	156.250	175.000	MHz
		80	80	409.375	352.625	322.313	352.625	MHz
		80	160	204.688	176.313	161.156	176.313	MHz
F_{RXIN2}	RXUSRCLK2[3] maximum frequency	16	16	511.719	511.719	390.625	390.625	MHz
		16	32	255.859	255.859	195.313	195.313	MHz
		32	32	511.719	511.719	390.625	390.625	MHz
		32	64	255.859	255.859	195.313	195.313	MHz
		64	64	511.719	440.781	402.891	402.832	MHz
		64	128	255.859	220.391	201.445	201.416	MHz
		20	20	409.375	409.375	312.500	312.500	MHz
		20	40	204.688	204.688	156.250	156.250	MHz
		40	40	409.375	409.375	312.500	350.000	MHz
		40	80	204.688	204.688	156.250	175.000	MHz
		80	80	409.375	352.625	322.313	352.625	MHz
		80	160	204.688	176.313	161.156	176.313	MHz

Notes:

1. Clocking must be implemented as described in the *UltraScale Architecture GTY Transceivers User Guide* (UG578).
2. For the speed grades -1E, -1I, and -1M, only a 64- or 80-bit internal data path can be used for line rates above 12.5 Gb/s.
3. When the gearbox is used, these maximums refer to the XCLK. For more information, see the Valid Data Width Combinations for TX Asynchronous Gearbox table in the *UltraScale Architecture GTY Transceivers User Guide* (UG578).

Table 57: **GTY Transceiver Transmitter Switching Characteristics**

Symbol	Description	Condition	Min	Typ	Max	Units
F_{GTYTX}	Serial data rate range		0.500	–	F_{GTYMAX}	Gb/s
T_{RTX}	TX rise time	20%–80%	–	21	–	ps
T_{FTX}	TX fall time	80%–20%	–	21	–	ps
T_{LLSKEW}	TX lane-to-lane skew[1]		–	–	500.00	ps
$T_{J32.75}$	Total jitter[2, 4]	32.75 Gb/s	–	–	0.35	UI
$D_{J32.75}$	Deterministic jitter[2, 4]		–	–	0.19	UI

Table 57: **GTY Transceiver Transmitter Switching Characteristics** *(cont'd)*

Symbol	Description	Condition	Min	Typ	Max	Units
$T_{J28.21}$	Total jitter[2, 4]	28.21 Gb/s	–	–	0.28	UI
$D_{J28.21}$	Deterministic jitter[2, 4]		–	–	0.17	UI
$T_{J16.375}$	Total jitter[2, 4]	16.375 Gb/s	–	–	0.28	UI
$D_{J16.375}$	Deterministic jitter[2, 4]		–	–	0.17	UI
$T_{J15.0}$	Total jitter[2, 4]	15.0 Gb/s	–	–	0.28	UI
$D_{J15.0}$	Deterministic jitter[2, 4]		–	–	0.17	UI
$T_{J14.1}$	Total jitter[2, 4]	14.1 Gb/s	–	–	0.28	UI
$D_{J14.1}$	Deterministic jitter[2, 4]		–	–	0.17	UI
$T_{J14.1}$	Total jitter[2, 4]	14.025 Gb/s	–	–	0.28	UI
$D_{J14.1}$	Deterministic jitter[2, 4]		–	–	0.17	UI
$T_{J13.1}$	Total jitter[2, 4]	13.1 Gb/s	–	–	0.28	UI
$D_{J13.1}$	Deterministic jitter[2, 4]		–	–	0.17	UI
$T_{J12.5_QPLL}$	Total jitter[2, 4]	12.5 Gb/s	–	–	0.28	UI
$D_{J12.5_QPLL}$	Deterministic jitter[2, 4]		–	–	0.17	UI
$T_{J12.5_CPLL}$	Total jitter[3, 4]	12.5 Gb/s	–	–	0.33	UI
$D_{J12.5_CPLL}$	Deterministic jitter[3, 4]		–	–	0.17	UI
$T_{J11.3_QPLL}$	Total jitter[2, 4]	11.3 Gb/s	–	–	0.28	UI
$D_{J11.3_QPLL}$	Deterministic jitter[2, 4]		–	–	0.17	UI
$T_{J10.3125_QPLL}$	Total jitter[2, 4]	10.3125 Gb/s	–	–	0.28	UI
$D_{J10.3125_QPLL}$	Deterministic jitter[2, 4]		–	–	0.17	UI
$T_{J10.3125_CPLL}$	Total jitter[3, 4]	10.3125 Gb/s	–	–	0.33	UI
$D_{J10.3125_CPLL}$	Deterministic jitter[3, 4]		–	–	0.17	UI
$T_{J9.953_QPLL}$	Total jitter[2, 4]	9.953 Gb/s	–	–	0.28	UI
$D_{J9.953_QPLL}$	Deterministic jitter[2, 4]		–	–	0.17	UI
$T_{J9.953_CPLL}$	Total jitter[3, 4]	9.953 Gb/s	–	–	0.33	UI
$D_{J9.953_CPLL}$	Deterministic jitter[3, 4]		–	–	0.17	UI
$T_{J8.0}$	Total jitter[3, 4]	8.0 Gb/s	–	–	0.32	UI
$D_{J8.0}$	Deterministic jitter[3, 4]		–	–	0.17	UI
$T_{J6.6}$	Total jitter[3, 4]	6.6 Gb/s	–	–	0.30	UI
$D_{J6.6}$	Deterministic jitter[3, 4]		–	–	0.15	UI
$T_{J5.0}$	Total jitter[3, 4]	5.0 Gb/s	–	–	0.30	UI
$D_{J5.0}$	Deterministic jitter[3, 4]		–	–	0.15	UI
$T_{J4.25}$	Total jitter[3, 4]	4.25 Gb/s	–	–	0.30	UI
$D_{J4.25}$	Deterministic jitter[3, 4]		–	–	0.15	UI
$T_{J3.20}$	Total jitter[3, 4]	3.20 Gb/s[5]	–	–	0.20	UI
$D_{J3.20}$	Deterministic jitter[3, 4]		–	–	0.10	UI
$T_{J2.5}$	Total jitter[3, 4]	2.5 Gb/s[6]	–	–	0.20	UI
$D_{J2.5}$	Deterministic jitter[3, 4]		–	–	0.10	UI
$T_{J1.25}$	Total jitter[3, 4]	1.25 Gb/s[7]	–	–	0.15	UI
$D_{J1.25}$	Deterministic jitter[3, 4]		–	–	0.06	UI

Table 57: **GTY Transceiver Transmitter Switching Characteristics** *(cont'd)*

Symbol	Description	Condition	Min	Typ	Max	Units
T_{J500}	Total jitter[3, 4]	500 Mb/s[8]	–	–	0.10	UI
D_{J500}	Deterministic jitter[3, 4]		–	–	0.03	UI

Notes:

1. Using same REFCLK input with TX phase alignment enabled for up to four consecutive transmitters (one fully populated GTY Quad) at maximum line rate.
2. Using QPLL_FBDIV = 40, 20-bit internal data width. These values are NOT intended for protocol specific compliance determinations.
3. Using CPLL_FBDIV = 2, 20-bit internal data width. These values are NOT intended for protocol specific compliance determinations.
4. All jitter values are based on a bit-error ratio of 10^{-12}.
5. CPLL frequency at 3.2 GHz and TXOUT_DIV = 2.
6. CPLL frequency at 2.5 GHz and TXOUT_DIV = 2.
7. CPLL frequency at 2.5 GHz and TXOUT_DIV = 4.
8. CPLL frequency at 2.0 GHz and TXOUT_DIV = 8.

Table 58: **GTY Transceiver Receiver Switching Characteristics**

Symbol	Description	Condition	Min	Typ	Max	Units
F_{GTYRX}	Serial data rate		0.500	–	F_{GTYMAX}	Gb/s
R_{XSST}	Receiver spread-spectrum tracking[1]	Modulated at 33 kHz	–5000	–	0	ppm
R_{XRL}	Run length (CID)		–	–	256	UI
$R_{XPPMTOL}$	Data/REFCLK PPM offset tolerance	Bit rates ≤ 6.6 Gb/s	–1250	–	1250	ppm
		Bit rates > 6.6 Gb/s and ≤ 8.0 Gb/s	–700	–	700	ppm
		Bit rates > 8.0 Gb/s	–200	–	200	ppm
SJ Jitter Tolerance[2]						
$J_{T_SJ32.75}$	Sinusoidal jitter (QPLL)[3]	32.75 Gb/s	0.25	–	–	UI
$J_{T_SJ28.21}$	Sinusoidal jitter (QPLL)[3]	28.21 Gb/s	0.30	–	–	UI
$J_{T_SJ16.375}$	Sinusoidal jitter (QPLL)[3]	16.375 Gb/s	0.30	–	–	UI
$J_{T_SJ15.0}$	Sinusoidal jitter (QPLL)[3]	15.0 Gb/s	0.30	–	–	UI
$J_{T_SJ14.1}$	Sinusoidal jitter (QPLL)[3]	14.1 Gb/s	0.30	–	–	UI
$J_{T_SJ13.1}$	Sinusoidal jitter (QPLL)[3]	13.1 Gb/s	0.30	–	–	UI
$J_{T_SJ12.5}$	Sinusoidal jitter (QPLL)[3]	12.5 Gb/s	0.30	–	–	UI
$J_{T_SJ11.3}$	Sinusoidal jitter (QPLL)[3]	11.3 Gb/s	0.30	–	–	UI
$J_{T_SJ10.32_QPLL}$	Sinusoidal jitter (QPLL)[3]	10.32 Gb/s	0.30	–	–	UI
$J_{T_SJ10.32_CPLL}$	Sinusoidal jitter (CPLL)[3]	10.32 Gb/s	0.30	–	–	UI
$J_{T_SJ9.953_QPLL}$	Sinusoidal jitter (QPLL)[3]	9.953 Gb/s	0.30	–	–	UI
$J_{T_SJ9.953_CPLL}$	Sinusoidal jitter (CPLL)[3]	9.953 Gb/s	0.30	–	–	UI
$J_{T_SJ8.0}$	Sinusoidal jitter (CPLL)[3]	8.0 Gb/s	0.42	–	–	UI
$J_{T_SJ6.6}$	Sinusoidal jitter (CPLL)[3]	6.6 Gb/s	0.44	–	–	UI
$J_{T_SJ5.0}$	Sinusoidal jitter (CPLL)[3]	5.0 Gb/s	0.44	–	–	UI
$J_{T_SJ4.25}$	Sinusoidal jitter (CPLL)[3]	4.25 Gb/s	0.44	–	–	UI
$J_{T_SJ3.2}$	Sinusoidal jitter (CPLL)[3]	3.2 Gb/s[4]	0.45	–	–	UI
$J_{T_SJ2.5}$	Sinusoidal jitter (CPLL)[3]	2.5 Gb/s[5]	0.30	–	–	UI
$J_{T_SJ1.25}$	Sinusoidal jitter (CPLL)[3]	1.25 Gb/s[6]	0.30	–	–	UI
J_{T_SJ500}	Sinusoidal jitter (CPLL)[3]	500 Mb/s[7]	0.30	–	–	UI

Table 58: **GTY Transceiver Receiver Switching Characteristics** *(cont'd)*

Symbol	Description	Condition	Min	Typ	Max	Units
SJ Jitter Tolerance with Stressed Eye[2]						
$J_{T_TJSE3.2}$	Total jitter with stressed eye[8]	3.2 Gb/s	0.70	–	–	UI
$J_{T_TJSE6.6}$		6.6 Gb/s	0.70	–	–	UI
$J_{T_SJSE3.2}$	Sinusoidal jitter with stressed eye[8]	3.2 Gb/s	0.10	–	–	UI
$J_{T_SJSE6.6}$		6.6 Gb/s	0.10	–	–	UI

Notes:
1. Using RXOUT_DIV = 1, 2, and 4.
2. All jitter values are based on a bit error ratio of 10^{-12}.
3. The frequency of the injected sinusoidal jitter is 80 MHz.
4. CPLL frequency at 3.2 GHz and RXOUT_DIV = 2.
5. CPLL frequency at 2.5 GHz and RXOUT_DIV = 2.
6. CPLL frequency at 2.5 GHz and RXOUT_DIV = 4.
7. CPLL frequency at 2.0 GHz and RXOUT_DIV = 8.
8. Composite jitter with RX equalizer enabled. DFE disabled.

GTY Transceiver Electrical Compliance

The *UltraScale Architecture GTY Transceivers User Guide* (UG578) contains recommended use modes that ensure compliance for the protocols listed in the following table. The transceiver wizard provides the recommended settings for those use cases and for protocol specific characteristics.

Table 59: **GTY Transceiver Protocol List**

Protocol	Specification	Serial Rate (Gb/s)	Electrical Compliance
CAUI-4	IEEE 802.3-2012	25.78125	Compliant
28 Gb/s backplane	CEI-25G-LR	25–28.05	Compliant
Interlaken	OIF-CEI-6G, OIF-CEI-11GSR, OIF-CEI-28G-MR	4.25–25.78125	Compliant
100GBASE-KR4	IEEE 802.3bj-2014, CEI-25G-LR	25.78125	Compliant[1]
100GBASE-CR4	IEEE 802.3bj-2014, CEI-25G-LR	25.78125	Compliant[1]
50GBASE-KR4	IEEE 802.3by-2014, CEI-25G-LR	25.78125	Compliant[1]
50GBASE-CR4	IEEE 802.3by-2014, CEI-25G-LR	25.78125	Compliant[1]
25GBASE-KR4	IEEE 802.3by-2014, CEI-25G-LR	25.78125	Compliant[1]
25GBASE-CR4	IEEE 802.3by-2014, CEI-25G-LR	25.78125	Compliant[1]
OTU4 (OTL4.4) CFP2	OIF-CEI-28G-VSR	27.952493–32.75	Compliant
OTU4 (OTL4.4) CFP	OIF-CEI-11G-MR	11.18–13.1	Compliant
CAUI-10	IEEE 802.3-2012	10.3125	Compliant
nPPI	IEEE 802.3-2012	10.3125	Compliant
10GBASE-KR[2]	IEEE 802.3-2012	10.3125	Compliant
SFP+	SFF-8431 (SR and LR)	9.95328–11.10	Compliant
XFP	INF-8077i, revision 4.5	10.3125	Compliant
RXAUI	CEI-6G-SR	6.25	Compliant
XAUI	IEEE 802.3-2012	3.125	Compliant
1000BASE-X	IEEE 802.3-2012	1.25	Compliant

Table 59: **GTY Transceiver Protocol List** *(cont'd)*

Protocol	Specification	Serial Rate (Gb/s)	Electrical Compliance
5.0G Ethernet	IEEE 802.3bx (PAR)	5	Compliant
2.5G Ethernet	IEEE 802.3bx (PAR)	2.5	Compliant
HiGig, HiGig+, HiGig2	IEEE 802.3-2012	3.74, 6.6	Compliant
QSGMII	QSGMII v1.2 (Cisco System, ENG-46158)	5	Compliant
OTU2	ITU G.8251	10.709225	Compliant
OTU4 (OTL4.10)	OIF-CEI-11G-SR	11.180997	Compliant
OC-3/12/48/192	GR-253-CORE	0.1555–9.956	Compliant
PCIe Gen1, 2, 3	PCI Express base 3.0	2.5, 5.0, and 8.0	Compliant
SDI[3]	SMPTE 424M-2006	0.27–2.97	Compliant
UHD-SDI[3]	SMPTE ST-2081 6G, SMPTE ST-2082 12G	6 and 12	Compliant
Hybrid memory cube (HMC)	HMC-15G-SR	10, 12.5, and 15.0	Compliant
MoSys bandwidth engine	CEI-11-SR and CEI-11-SR (overclocked)	10.3125, 15.5	Compliant
CPRI	CPRI_v_6_1_2014-07-01	0.6144–12.165	Compliant
Passive optical network (PON)	10G-EPON, 1G-EPON, NG-PON2, XG-PON, and 2.5G-PON	0.155–10.3125	Compliant
JESD204a/b	OIF-CEI-6G, OIF-CEI-11G	3.125–12.5	Compliant
Serial RapidIO	RapidIO specification 3.1	1.25–10.3125	Compliant
DisplayPort	DP 1.2B CTS	1.62–5.4	Compliant[3]
Fibre channel	FC-PI-4	1.0625–14.025	Compliant
SATA Gen1, 2, 3	Serial ATA revision 3.0 specification	1.5, 3.0, and 6.0	Compliant
SAS Gen1, 2, 3	T10/BSR INCITS 519	3.0, 6.0, and 12.0	Compliant
SFI-5	OIF-SFI5-01.0	0.625 - 12.5	Compliant
Aurora	CEI-6G, CEI-11G-LR	All rates	Compliant

Notes:

1. 25 dB loss at Nyquist without FEC.
2. The transition time of the transmitter is faster than the IEEE Std 802.3-2012 specification.
3. This protocol requires external circuitry to achieve compliance.

GTM Transceiver Specifications

The *UltraScale Architecture and Product Data Sheet: Overview* (DS890) lists the Virtex UltraScale+ FPGAs that include the GTM transceivers.

GTM Transceiver DC Input and Output Levels

Table 60 summarizes the DC specifications of the GTM transceivers in Virtex UltraScale+ FPGAs. Consult the *Virtex UltraScale+ FPGAs GTM Transceivers User Guide* (UG581) for further details.

Table 60: **GTM Transceiver DC Specifications**

Symbol	DC Parameter	Conditions	Min	Typ	Max	Units
DV_{PPIN}	Differential peak-to-peak input voltage (external AC coupled)	PAM4	600	–	800	mV
		NRZ	150	–	900	mV
D_{VPPOUT}	Differential peak-to-peak output voltage[1]	Transmitter output swing is set to `11111`	800	–	–	mV
$V_{CMOUTAC}$	Common mode output voltage: AC coupled	Equation based	$V_{MGTAVTT} - D_{VPPOUT}/2$			mV
R_{IN}	Differential input resistance		–	100	–	Ω
R_{OUT}	Differential output resistance		–	100	–	Ω
T_{OSKEW}	Transmitter output pair (TXP and TXN) intra-pair skew		–	–	10	ps
C_{EXT}	Recommended external AC coupling capacitor[3]		–	100	–	nF

Notes:

1. The output swing and pre-emphasis levels are programmable using the GTM transceiver attributes discussed in the *Virtex UltraScale+ FPGAs GTM Transceivers User Guide* (UG581) and can result in values lower than reported in this table.
2. V_{RX_TERM} is the remote RX termination voltage.
3. Other values can be used as appropriate to conform to specific protocols and standards.

Figure 5: **Single-Ended Peak-to-Peak Voltage**

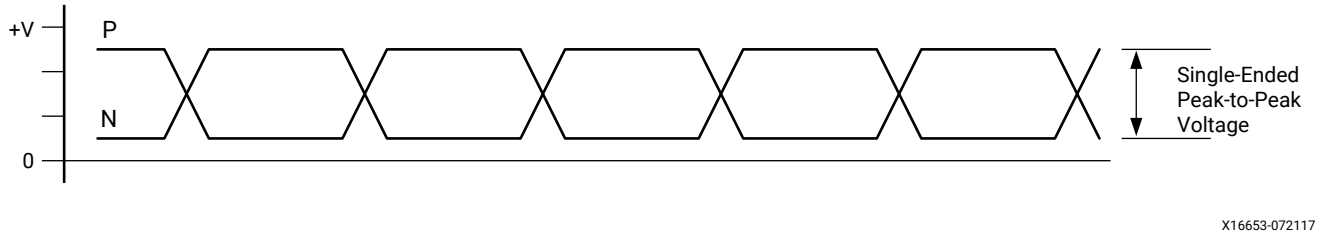

Figure 6: **Differential Peak-to-Peak Voltage**

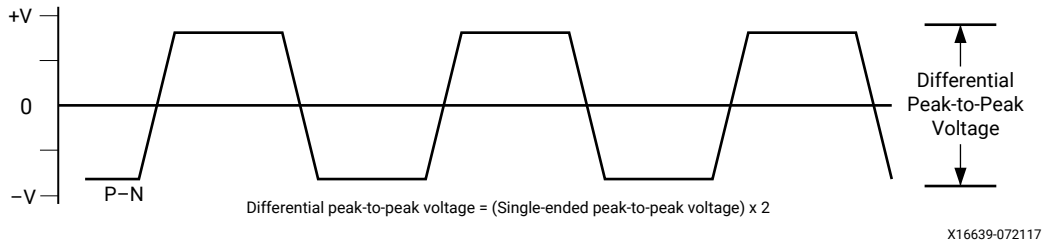

The following tables summarize the DC specifications of the clock input/output levels of the GTM transceivers in Virtex UltraScale+ FPGAs. Consult the *Virtex UltraScale+ FPGAs GTM Transceivers User Guide* (UG581) for further details.

Table 61: **GTM Transceiver Clock DC Input Level Specification**

Symbol	DC Parameter	Min	Typ	Max	Units
V_{IDIFF}	Differential peak-to-peak input voltage	250	–	2000	mV
R_{IN}	Differential input resistance	–	100	–	Ω
C_{EXT}	Required external AC coupling capacitor	–	10	–	nF

GTM Transceiver Switching Characteristics

Consult the *Virtex UltraScale+ FPGAs GTM Transceivers User Guide* (UG581) for further information.

Table 62: **GTM Transceiver Performance**

Symbol	Description[1, 2]	Output Divider	Speed Grade and V_{CCINT} Operating Voltages				Units
			0.90V	0.85V		0.72V	
			-3	-2	-1	-2	
			Max	Max	Max	Max	
$F_{GTMPAM4MAX}$	GTM transceiver PAM4 maximum line rate	1	58.00	56.42	53.20	56.42	Gb/s
$F_{GTMPAM4MIN}$	GTM transceiver PAM4 minimum line rate		39.20	39.20	39.20	39.20	Gb/s
$F_{GTMPAM42MAX}$	GTM transceiver PAM4 maximum line rate	2	29.00	28.21	26.60	28.21	Gb/s
$F_{GTMPAM42MIN}$	GTM transceiver PAM4 minimum line rate		20.60	20.60	20.60	20.60	Gb/s
$F_{GTMNRZMAX}$	GTM transceiver NRZ maximum line rate	1	29.00	28.21	26.60	28.21	Gb/s
$F_{GTMNRZMIN}$	GTM transceiver NRZ minimum line rate		19.60	19.60	19.60	19.60	Gb/s
$F_{GTMNRZ2MAX}$	GTM transceiver NRZ maximum line rate	2	14.50	14.105	13.30	14.105	Gb/s
$F_{GTMNRZ2MIN}$	GTM transceiver NRZ minimum line rate		10.30	10.30	10.30	10.30	Gb/s

Notes:

1. For PAM4, data rates from $F_{GTMPAM42MAX}$ to 39.2 Gb/s are not available.
2. For NRZ, data rates from $F_{GTMNRZ2MAX}$ to 19.6 Gb/s are not available.

Table 63: **GTM Transceiver Dynamic Reconfiguration Port (DRP) Switching Characteristics**

Symbol	Description	All Speed Grades	Units
$F_{GTMDRPCLK}$	GTMDRPCLK maximum frequency	250	MHz

Table 64: **GTM Transceiver Reference Clock Switching Characteristics**

Symbol	Description	Conditions	All Speed Grades			Units
			Min	Typ	Max	
F_{GCLK}	Reference clock frequency range		60	–	820	MHz
T_{RCLK}	Reference clock rise time	20% – 80%	–	200	–	ps
T_{FCLK}	Reference clock fall time	80% – 20%	–	200	–	ps
T_{DCREF}	Reference clock duty cycle	Transceiver PLL only	40	50	60	%

Table 65: **GTM Transceiver Reference Clock Oscillator Selection Phase Noise Mask**

Symbol	Description[1, 2]	Offset Frequency	Min	Typ	Max	Units
$LCPLL_{REFCLKMASK}$	LCPLL reference clock select phase noise mask at REFCLK frequency = 156.25 MHz	10 kHz	–	–	–112	dBc/Hz
		100 kHz	–	–	–128	
		1 MHz	–	–	–145	
	LCPLL0 reference clock select phase noise mask at REFCLK frequency = 312.5 MHz	10 kHz	–	–	–103	dBc/Hz
		100 kHz	–	–	–123	
		1 MHz	–	–	–143	
	LCPLL0 reference clock select phase noise mask at REFCLK frequency = 625 MHz	10 kHz	–	–	–98	dBc/Hz
		100 kHz	–	–	–117	
		1 MHz	–	–	–140	

Notes:

1. For reference clock frequencies not in this table, use the phase-noise mask for the nearest reference clock frequency.
2. This reference clock phase-noise mask is superseded by any reference clock phase-noise mask that is specified in a supported protocol.

Table 66: **GTM Transceiver PLL/Lock Time Adaptation**

Symbol	Description	Conditions		All Speed Grades			Units
				Min	Typ	Max	
T_{LOCK}	Initial PLL lock	53.125 Gb/s line rate with 156.25 MHz REFCLK		–	–	3	ms
		All other cases		–	–	5.7	ms
T_{DLOCK}	Clock recovery phase acquisition and adaptation time	PAM4 (<39 Gb/s)	Short reach (IL < 12db)	–	5.90×10^{10}	–	UI
			Long reach (IL ≥ 12db)	–	3.05×10^{9}	–	UI
		PAM4 (≥39 Gb/s)	Short reach (IL < 12db)	–	3.67×10^{10}	–	UI
			Long reach (IL ≥ 12db)	–	6.09×10^{9}	–	UI
		NRZ		–	6.09×10^{9}	–	UI

Table 67: **GTM Transceiver User Clock Switching Characteristics**

Symbol	Description[1]		Data Width Conditions (Bit)		Speed Grade and V_{CCINT} Operating Voltages				Units
					0.90V	0.85V		0.72V	
			Internal Logic	Interconnect Logic	-3	-2	-1	-2	
$F_{TXOUTPMA}$	TXOUTCLK maximum frequency sourced from OUTCLKPMA				453.13	440.78	415.63	440.78	MHz
$F_{RXOUTPMA}$	RXOUTCLK maximum frequency sourced from OUTCLKPMA				453.13	440.78	415.63	440.78	MHz
$F_{TXOUTPROGDIV}$	TXOUTCLK maximum frequency sourced from TXPROGDIVCLK				725.00	705.25	665.00	705.25	MHz
$F_{RXOUTPROGDIV}$	RXOUTCLK maximum frequency sourced from RXPROGDIVCLK				725.00	705.25	665.00	705.25	MHz
F_{TXIN}	TXUSRCLK maximum frequency	PAM4	80	80	725.00	705.25	665.00	705.25	MHz
			128	128	453.13	440.78	415.63	440.78	MHz
			80	160	725.00	705.25	665.00	705.25	MHz
			128	256	453.13	440.78	415.63	440.78	MHz
		NRZ	64	64	453.13	440.78	415.63	440.78	MHz
			64	128	453.13	440.78	415.63	440.78	MHz
F_{RXIN}	RXUSRCLK maximum frequency	PAM4	80	80	725.00	705.25	665.00	705.25	MHz
			128	128	453.13	440.78	415.63	440.78	MHz
			80	160	725.00	705.25	665.00	705.25	MHz
			128	256	453.13	440.78	415.63	440.78	MHz
		NRZ	64	64	453.13	440.78	415.63	440.78	MHz
			64	128	453.13	440.78	415.63	440.78	MHz
F_{TXIN2}	TXUSRCLK2 maximum frequency	PAM4	80	80	725.00	705.25	665.00	705.25	MHz
			128	128	453.13	440.78	415.63	440.78	MHz
			80	160	362.50	352.63	332.50	352.63	MHz
			128	256	226.56	220.39	207.81	220.39	MHz
		NRZ	64	64	453.13	440.78	415.63	440.78	MHz
			64	128	226.56	220.39	207.81	220.39	MHz
F_{RXIN2}	RXUSRCLK2 maximum frequency	PAM4	80	80	725.00	705.25	665.00	705.25	MHz
			128	128	453.13	440.78	415.63	440.78	MHz
			80	160	362.50	352.63	332.50	352.63	MHz
			128	256	226.56	220.39	207.81	220.39	MHz
		NRZ	64	64	453.13	440.78	415.63	440.78	MHz
			64	128	226.56	220.39	207.81	220.39	MHz

Notes:

1. Clocking must be implemented as described in the *Virtex UltraScale+ FPGAs GTM Transceivers User Guide* (UG581).

Table 68: **GTM Transceiver Transmitter Switching Characteristics**

Symbol	Description	Conditions		Min	Typ	Max	Units
$F_{GTMPAMTX}$	Transmitter PAM4 serial data rate range			20.6	–	$F_{GTMPAMMAX}$	Gb/s
$F_{GTMNRZTX}$	Transmitter NRZ serial data rate range			10.3	–	$F_{GTMNRZMAX}$	Gb/s
T_{SLEW}	TX slew rate			–	4.76×10^{4}	–	V/µs
T_{J4U58_PAM4}	TX uncorrelated jitter @10^{-4}	PAM4	58 Gb/s	–	–	0.118	UI
T_{EOJ58_PAM4}	TX even-odd jitter[1]			–	–	0.019	UI
$T_{J4U56.5_PAM4}$	TX uncorrelated jitter @10^{-4}	PAM4	56.5 Gb/s	–	–	0.118	UI
$T_{EOJ56.5_PAM4}$	TX even-odd jitter[1]			–	–	0.019	UI
$T_{J4U53.125_PAM4}$	TX uncorrelated jitter @10^{-4}	PAM4	53.125 Gb/s	–	–	0.118	UI
$T_{EOJ53.125_PAM4}$	TX even-odd jitter[1]			–	–	0.019	UI
T_{J4U48_PAM4}	TX uncorrelated jitter @10^{-4}	PAM4	48 Gb/s	–	–	0.118	UI
T_{EOJ48_PAM4}	TX even-odd jitter[1]			–	–	0.019	UI
T_{J4U40_PAM4}	TX uncorrelated jitter @10^{-4}	PAM4	40 Gb/s	–	–	0.118	UI
T_{EOJ40_PAM4}	TX even-odd jitter[1]			–	–	0.019	UI
$T_{J4U28.21_PAM4}$	TX uncorrelated jitter @10^{-4}	PAM4	28.21 Gb/s	–	–	0.118	UI
$T_{EOJ28.21_PAM4}$	Deterministic jitter[1]			–	–	0.019	UI
$T_{J4U20.6_PAM4}$	TX uncorrelated jitter @10^{-4}	PAM4	20.6 Gb/s	–	–	0.118	UI
$T_{EOJ20.6_PAM4}$	TX even-odd jitter[1]			–	–	0.019	UI
T_{J29_NRZ}	Total jitter[1, 2]	NRZ	29 Gb/s	–	–	0.28	UI
D_{J29_NRZ}	Deterministic jitter[1, 2]			–	–	0.17	UI
$T_{J28.21_NRZ}$	Total jitter[1, 2]	NRZ	28.21 Gb/s	–	–	0.28	UI
$D_{J28.21_NRZ}$	Deterministic jitter[1, 2]			–	–	0.17	UI
$T_{J26.5625_NRZ}$	Total jitter[1, 2]	NRZ	26.5625 Gb/s	–	–	0.28	UI
$D_{J26.5625_NRZ}$	Deterministic jitter[1, 2]			–	–	0.17	UI
$T_{J25.78125_NRZ}$	Total jitter[1, 2]	NRZ	25.78125 Gb/s	–	–	0.28	UI
$D_{J25.78125_NRZ}$	Deterministic jitter[1, 2]			–	–	0.17	UI
T_{J24_NRZ}	Total jitter[1, 2]	NRZ	24 Gb/s	–	–	0.28	UI
D_{J24_NRZ}	Deterministic jitter[1, 2]			–	–	0.17	UI
$T_{J19.6_NRZ}$	Total jitter[1, 2]	NRZ	19.6 Gb/s	–	–	0.28	UI
$D_{J19.6_NRZ}$	Deterministic jitter[1, 2]			–	–	0.17	UI

Notes:

1. Using LCPLL_FBDIV = 40, 80-bit internal data width. These values are NOT intended for protocol specific compliance determinations.
2. NRZ jitter values are based on a bit-error ratio of 10^{-12}.

Table 69: **GTM Transceiver Receiver Switching Characteristics**

Symbol	Description	Conditions		Min	Typ	Max	Units
$F_{GTMPAMRX}$	Receiver PAM4 serial data rate range			20.6	–	$F_{GTMPAM4MAX}$	Gb/s
$F_{GTMNRZRX}$	Receiver NRZ serial data rate range			10.3	–	$F_{GTMNRZ4MAX}$	Gb/s
R_{XRL}	Run length (CID)			–	–	128	UI
$R_{XPPMTOL}$	Data/REFCLK PPM offset tolerance			–200	–	200	ppm
SJ Jitter Tolerance[2, 3, 1]							
$J_{T_SJ58_PAM4}$	Sinusoidal jitter	PAM4	58 Gb/s	0.07	–	–	UI
$J_{T_SJ56.5_PAM4}$	Sinusoidal jitter	PAM4	56.5 Gb/s	0.07	–	–	UI
$J_{T_SJ53.125_PAM4}$	Sinusoidal jitter	PAM4	53.125 Gb/s	0.07	–	–	UI
$J_{T_SJ48_PAM4}$	Sinusoidal jitter	PAM4	48 Gb/s	0.07	–	–	UI
$J_{T_SJ39.2_PAM4}$	Sinusoidal jitter	PAM4	39.2 Gb/s	0.07	–	–	UI
$J_{T_SJ29_PAM4}$	Sinusoidal jitter	PAM4	29 Gb/s	0.07	–	–	UI
$J_{T_SJ20.6_PAM4}$	Sinusoidal jitter	PAM4	20.6 Gb/s	0.07	–	–	UI
$J_{T_SJ29_NRZ}$	Sinusoidal jitter	NRZ	29 Gb/s	0.3	–	–	UI
$J_{T_SJ25.78125_NRZ}$	Sinusoidal jitter	NRZ	25.78125 Gb/s	0.3	–	–	UI
$J_{T_SJ19.6_NRZ}$	Sinusoidal jitter	NRZ	19.6 Gb/s	0.3	–	–	UI
$J_{T_SJ15_NRZ}$	Sinusoidal jitter	NRZ	15.0 Gb/s	0.3	–	–	UI
$J_{T_SJ10.3_NRZ}$	Sinusoidal jitter	NRZ	10.3 Gb/s	0.3	–	–	UI

Notes:

1. PAM4 values are measured at a bit error ratio of 10^{-6}.
2. NRZ values are based on a bit error ratio of 10^{-12}.
3. The frequency of the injected sinusoidal jitter is 10 MHz.

GTM Transceiver Electrical Compliance

The *Virtex UltraScale+ FPGAs GTM Transceivers User Guide* (UG581) contains recommended use modes that ensure compliance for the protocols listed in the following table. The transceiver wizard provides the recommended settings for those use cases and for protocol specific characteristics.

Table 70: **GTM Transceiver Protocol List**

Protocol	Specification	Modulation	Serial Rate (Gb/s)	Electrical Compliance
400GAUI-8	IEEE 802.3bs 120D/120E	PAM4	53.125	Compliant
200GAUI-4	IEEE 802.3bs 120D/120E	PAM4	53.125	Compliant
100GAUI-2	IEEE 802.3cd 135G/135F	PAM4	53.125	Compliant
50GAUI-1	IEEE 802.3cd 135G/135F	PAM4	53.125	Compliant
200GBASE-KR2	IEEE 802.3cd 137	PAM4	53.125	Compliant
200GBASE-CR2	IEEE 802.3cd 136A	PAM4	53.125	Compliant
100GBASE-KR2	IEEE 802.3cd 137	PAM4	53.125	Compliant
100GBASE-CR2	IEEE 802.3cd 136A	PAM4	53.125	Compliant
50GBASE-KR	IEEE 802.3cd 137	PAM4	53.125	Compliant
50GBASE-CR	IEEE 802.3cd 136A	PAM4	53.125	Compliant
CAUI-4	IEEE 802.3bm 83D/83E	NRZ	25.78125	Compliant
50GAUI-2	IEEE 802.3cd 135D/135E	NRZ	26.5625	Compliant
LAUI-2	IEEE 802.3cd 135B/135C	NRZ	25.78125	Compliant
25GAUI-1	IEEE 802.3cd 109A/109B	NRZ	27.78125	Compliant
100GBASE-KR4	IEEE 802.3bj 93.8	NRZ	25.78125	Compliant
100GBASE-CR4	IEEE 802.3bj 92A	NRZ	25.78125	Compliant
25GBASE-KR	IEEE 802.3by 111	NRZ	25.78125	Compliant
25GBASE-CR	IEEE 802.3by 110	NRZ	25.78125	Compliant
XLPPI	IEEE 802.3 86A	NRZ	10.3125	Compliant
40GBASE-CR4	IEEE 802.3 85A	NRZ	10.3125	Compliant
10GBASE-SR/LR	SFF8431	NRZ	10.3125	Compliant
10GBASE-KR	IEEE 802.3 72	NRZ	10.3125	Compliant
CEI-56G-VSR/MR/LR-PAM4	Common Electrical (I/O) CEI 4.0	PAM4	39.2-58	Compliant
CEI-25G/28G-VSR/MR/LR	Common Electrical (I/O) CEI 4.0	NRZ	19.9-28.1	Compliant
CEI-11G-SR/MR/LR	Common Electrical (I/O) CEI 4.0	NRZ	10.3-11.2	Compliant
10G-15G backplane capability	10G NRZ interfaces over backplanes that fall within the high-confidence region defined by IEEE 802.3 Clause 72	NRZ	15	Compliant
28.21G PAM4 backplanes	Insertion loss @ Nyquist (7.05 GHz) at BER < $10e^{-17}$ with FEC	PAM4	28.21	Compliant
58G PAM4 backplanes	IEEE 802.3bj style backplanes and copper cables at 58 Gb/s (35 dB with RS (544, 514) FEC)	PAM4	58	Compliant
OTU4 optical modules NRZ optical 7% FEC	100G OTU4 and OTUCn requirements to CFP2, CFP4, and QSFP28 optics, OIF-CEI28-VSR	NRZ	28.21	Compliant
OTU4 optical module PAM4 optical 7% FEC	100G QSFP56, OIF-CEI56-VSR	PAM4	56.4	Compliant
Interlaken 25.78125G	OIF-CEI-25G-MR @ 20 dB loss	NRZ	25.78125	Compliant

Table 70: **GTM Transceiver Protocol List** *(cont'd)*

Protocol	Specification	Modulation	Serial Rate (Gb/s)	Electrical Compliance
Interlaken 12.5G	OIF-CEI-11G-SR (extended)	NRZ	12.5	Compliant
CPRI 48G PAM4	Fibre channel datapath and 1-lane FEC with customer alignment implemented in logic with 64b/66b encoding	PAM4	48	Compliant
CPRI 24G, 12G, and 10.1G NRZ	CPRI_v_6_1_2014-07-01	NRZ	24, 12	Compliant

Notes:
1. Requires lock to reference on a per-lane basis and oversampling logic in the device logic to capture the slower auto-negotiation.

Integrated Interface Block for Interlaken

More information and documentation on solutions using the integrated interface block for Interlaken can be found at UltraScale+ Interlaken. The *UltraScale Architecture and Product Data Sheet: Overview* (DS890) lists how many blocks are in each Virtex UltraScale+ FPGA. This section describes the following Interlaken configurations.

- 12 x 12.5 Gb/s protocol and lane logic mode (Table 71).
- 6 x 25.78125 Gb/s and 6 x 28.21 Gb/s protocol and lane logic mode (Table 72).
- 12 x 25.78125 Gb/s lane logic only mode (Table 73).

Virtex UltraScale+ FPGAs in the FLGF1924 package are only supported using the 12 x 12.5 Gb/s Interlaken configuration. See the F_{GTYMAX} maximum line rates.

Table 71: **Maximum Performance for Interlaken 12 x 12.5 Gb/s Protocol and Lane Logic Mode Designs**

Symbol	Description	Speed Grade and V_{CCINT} Operating Voltages								Units
		0.90V		0.85V				0.72V		
		-3		-2		-1		-2		
$F_{RX_SERDES_CLK}$	Receive serializer/ deserializer clock	195.32		195.32		195.32		195.32		MHz
$F_{TX_SERDES_CLK}$	Transmit serializer/ deserializer clock	195.32		195.32		195.32		195.32		MHz
F_{DRP_CLK}	Dynamic reconfiguration port clock	250.00		250.00		250.00		250.00		MHz
		Min[1]	Max	Min[1]	Max	Min[1]	Max	Min[1]	Max	
F_{CORE_CLK}	Interlaken core clock	300.00	322.27	300.00	322.27	300.00	322.27	300.00	322.27	MHz
F_{LBUS_CLK}	Interlaken local bus clock	300.00	322.27	300.00	322.27	300.00	322.27	300.00	322.27	MHz

Notes:
1. These are the minimum clock frequencies at the maximum lane performance.

Table 72: **Maximum Performance for Interlaken 6 x 25.78125 Gb/s and 6 x 28.21 Gb/s Protocol and Lane Logic Mode Designs**

Symbol	Description	Speed Grade and V_{CCINT} Operating Voltages								Units
		0.90V		0.85V				0.72V		
		-3[1]		-2[1]		-1		-2		
$F_{RX_SERDES_CLK}$	Receive serializer/ deserializer clock	440.79		440.79		N/A		402.84		MHz
$F_{TX_SERDES_CLK}$	Transmit serializer/ deserializer clock	440.79		440.79		N/A		402.84		MHz
F_{DRP_CLK}	Dynamic reconfiguration port clock	250.00		250.00		N/A		250.00		MHz
		Min[2]	Max	Min[2]	Max	Min	Max	Min[2]	Max	
F_{CORE_CLK}	Interlaken core clock	412.50[3]	479.20	412.50[3]	479.20	N/A		412.50	429.69	MHz
F_{LBUS_CLK}	Interlaken local bus clock	300.00[4]	349.52	300.00[4]	349.52	N/A		300.00	349.52	MHz

Notes:

1. 6 x 28.21 mode is only supported in the -2 (V_{CCINT} = 0.85V) and -3 (V_{CCINT} = 0.90V) speed grades.
2. These are the minimum clock frequencies at the maximum lane performance.
3. The minimum value for CORE_CLK is 451.36 MHz for the 6 x 28.21 Gb/s protocol.
4. The minimum value for LBUS_CLK is 330.00 MHz for the 6 x 28.21 Gb/s protocol.

Table 73: **Maximum Performance for Interlaken 12 x 25.78125 Gb/s Lane Logic Only Mode Designs**

Symbol	Description	Speed Grade and V_{CCINT} Operating Voltages				Units
		0.90V	0.85V		0.72V	
		-3	-2	-1	-2	
$F_{RX_SERDES_CLK}$	Receive serializer/ deserializer clock	402.84	402.84	N/A	N/A	MHz
$F_{TX_SERDES_CLK}$	Transmit serializer/ deserializer clock	402.84	402.84	N/A	N/A	MHz
F_{DRP_CLK}	Dynamic reconfiguration port clock	250.00	250.00	N/A	N/A	MHz
F_{CORE_CLK}	Interlaken core clock	412.50	412.50	N/A	N/A	MHz
F_{LBUS_CLK}	Interlaken local bus clock	349.52	349.52	N/A	N/A	MHz

Integrated Interface Block for 100G Ethernet MAC and PCS

More information and documentation on solutions using the integrated 100 Gb/s Ethernet block can be found at UltraScale+ Integrated 100G Ethernet MAC/PCS. The *UltraScale Architecture and Product Data Sheet: Overview* (DS890) lists how many blocks are in each Virtex UltraScale+ FPGA.

Table 74: **Maximum Performance for 100G Ethernet Designs**

Symbol	Description	Speed Grade and V_{CCINT} Operating Voltages				Units
		0.90V	0.85V		0.72V	
		-3	-2	-1	-2	
CAUI-10 Mode						
F_{TX_CLK}	Transmit clock	390.625	390.625	322.266	322.266	MHz
F_{RX_CLK}	Receive clock	390.625	390.625	322.266	322.266	MHz
$F_{RX_SERDES_CLK}$	Receive serializer/deserializer clock	390.625	390.625	322.266	322.266	MHz
F_{DRP_CLK}	Dynamic reconfiguration port clock	250.00	250.00	250.00	250.00	MHz
CAUI-4, CAUI-4 + RS-FEC, and RS-FEC Transcode Bypass Modes						
F_{TX_CLK}	Transmit clock	390.625	322.266	322.266	322.266	MHz
F_{RX_CLK}	Receive clock	390.625	322.266	322.266	322.266	MHz
$F_{RX_SERDES_CLK}$	Receive serializer/deserializer clock	390.625	322.266	322.266	322.266	MHz
F_{DRP_CLK}	Dynamic reconfiguration port clock	250.00	250.00	250.00	250.00	MHz

Integrated Interface Block for PCI Express Designs

More information and documentation on solutions for PCI Express® designs can be found at PCI Express. The *UltraScale Architecture and Product Data Sheet: Overview* (DS890) lists how many blocks are in each Virtex UltraScale+ FPGA. Devices with HBM contain a mixture of PCIE4 and PCIE4C blocks. The PCIE4C blocks are augmented with support for the CCIX protocol and additional timing enhancements allowing the PCIE4C blocks to run Gen3 x16 when V_{CCINT} = 0.72V.

Table 75: **Maximum Performance for PCIE4-based PCI Express Designs**

Symbol	Description	Speed Grade and V_{CCINT} Operating Voltages				Units
		0.90V	0.85V		0.72V	
		-3	-2	-1	-2	
$F_{PIPECLK}$	Pipe clock maximum frequency	250.00	250.00	250.00	250.00	MHz
$F_{CORECLK}$	Core clock maximum frequency	500.00	500.00	500.00	250.00	MHz
F_{DRPCLK}	DRP clock maximum frequency	250.00	250.00	250.00	250.00	MHz
$F_{MCAPCLK}$	MCAP clock maximum frequency	125.00	125.00	125.00	125.00	MHz

Table 76: **Maximum Performance for PCIE4C-based PCI Express and CCIX Designs**

Symbol	Description	Speed Grade and V_{CCINT} Operating Voltages				Units
		0.90V	0.85V		0.72V	
		-3	-2	-1	-2	
$F_{PIPECLK}$	Pipe clock maximum frequency	250.00	250.00	250.00	250.00	MHz
$F_{CORECLK}$	Core clock maximum frequency	500.00	500.00	500.00	500.00	MHz
$F_{CORECLKCCIX}$	CCIX TL interface clock maximum frequency	500.00	500.00	500.00	N/A	MHz
F_{DRPCLK}	DRP clock maximum frequency	250.00	250.00	250.00	250.00	MHz
$F_{MCAPCLK}$	MCAP clock maximum frequency	125.00	125.00	125.00	125.00	MHz

High Bandwidth Memory Controller

The *UltraScale Architecture and Product Data Sheet: Overview* (DS890) lists the Virtex UltraScale+ FPGAs with integrated high-bandwidth memory (HBM).

Table 77: **Maximum Performance for High Bandwidth Memory Controller**

Symbol	Description	Speed Grade and V_{CCINT} Operating Voltages				Units
		0.90V	0.85V		0.72V	
		-3	-2	-1	-2	
$F_{HBM_REF_CLK}$	HBM controller reference clock maximum frequency	450.00	450.00	450.00	450.00	MHz
F_{ACLK}	AXI interface clock maximum frequency	450.00	450.00	400.00	400.00	MHz
F_{APB}	Advance peripheral bus (APB) clock maximum frequency	100.00	100.00	100.00	100.00	MHz
F_{HBM}	HBM maximum line rate interface to DRAM	1800	1800	1600	1800	Mb/s

System Monitor Specifications

Table 78: **System Monitor Specifications**

Parameter	Symbol	Comments/Conditions	Min	Typ	Max	Units
V_{CCADC} = 1.8V ±3%, V_{REFP} = 1.25V, V_{REFN} = 0V, ADCCLK = 5.2 MHz, T_j = –40°C to 100°C, typical values at T_j = 40°C						
ADC Accuracy[1]						
Resolution			10	–	–	Bits
Integral nonlinearity[2]	INL		–	–	±1.5	LSBs
Differential nonlinearity	DNL	No missing codes, guaranteed monotonic	–	–	±1	LSBs
Offset error		Offset calibration enabled	–	–	±2	LSBs
Gain error			–	–	±0.4	%
Sample rate			–	–	0.2	MS/s
RMS code noise		External 1.25V reference	–	–	1	LSBs
		On-chip reference	–	1	–	LSBs
ADC Accuracy at Extended Temperatures						
Resolution		T_j = –55°C to 125°C	10	–	–	Bits
Integral nonlinearity[2]	INL	T_j = –55°C to 125°C	–	–	±1.5	LSBs
Differential nonlinearity	DNL	No missing codes, guaranteed monotonic T_j = –55°C to 125°C	–	–	±1	
Analog Inputs[2]						
ADC input ranges		Unipolar operation	0	–	1	V
		Bipolar operation	–0.5	–	+0.5	V
		Unipolar common mode range (FS input)	0	–	+0.5	V
		Bipolar common mode range (FS input)	+0.5	–	+0.6	V
Maximum external channel input ranges		Adjacent channels set within these ranges should not corrupt measurements on adjacent channels	–0.1	–	V_{CCADC}	V

Table 78: **System Monitor Specifications** *(cont'd)*

Parameter	Symbol	Comments/Conditions	Min	Typ	Max	Units
On-Chip Sensor Accuracy						
Temperature sensor error[1, 3]		T_j = –55°C to 125°C (with external REF)	–	–	±3	°C
		T_j = –55°C to 110°C (with internal REF)	–	–	±3.5	°C
		T_j = 110°C to 125°C (with internal REF)	–	–	±5	°C
Supply sensor error[4]		Supply voltages 0.72V to 1.2V, T_j = –40°C to 100°C (with external REF)	–	–	±0.5	%
		Supply voltages 0.72V to 1.2V, T_j = –55°C to 125°C (with external REF)	–	–	±1.0	%
		All other supply voltages, T_j = –40°C to 100°C (with external REF)	–	–	±1.0	%
		All other supply voltages, T_j = –55°C to 125°C (with external REF)	–	–	±2.0	%
		Supply voltages 0.72V to 1.2V, T_j = –40°C to 100°C (with internal REF)	–	–	±1.0	%
		Supply voltages 0.72V to 1.2V, T_j = –55°C to 125°C (with internal REF)	–	–	±2.0	%
		All other supply voltages, T_j = –40°C to 100°C (with internal REF)	–	–	±1.5	%
		All other supply voltages, T_j = –55°C to 125°C (with internal REF)	–	–	±2.5	%
Conversion Rate[5]						
Conversion time—continuous	t_{CONV}	Number of ADCCLK cycles	26	–	32	Cycles
Conversion time—event	t_{CONV}	Number of ADCCLK cycles	–	–	21	Cycles
DRP clock frequency	DCLK	DRP clock frequency	8	–	250	MHz
ADC clock frequency	ADCCLK	Derived from DCLK	1	–	5.2	MHz
DCLK duty cycle			40	–	60	%
SYSMON Reference[6]						
External reference	V_{REFP}	Externally supplied reference voltage	1.20	1.25	1.30	V
On-chip reference		Ground V_{REFP} pin to AGND, T_j = –40°C to 100°C	1.2375	1.25	1.2625	V
		Ground V_{REFP} pin to AGND, T_j = –55°C to 125°C	1.225	1.25	1.275	V

Notes:

1. ADC offset errors are removed by enabling the ADC automatic offset calibration feature. The values are specified for when this feature is enabled.
2. See the Analog Input section in the *UltraScale Architecture System Monitor User Guide* (UG580).
3. When reading temperature values directly from the PMBus interface, the SYSMON has a +4°C offset due to the transfer function used by the PMBus application. For example, the external REF temperature sensor error's range of ±3°C becomes +1°C to +7°C when the temperature is read through the PMBus interface.
4. Supply sensor offset and gain errors are removed by enabling the automatic offset and gain calibration feature. The values are specified for when this feature is enabled.
5. See the Adjusting the Acquisition Settling Time section in the *UltraScale Architecture System Monitor User Guide* (UG580).
6. Any variation in the reference voltage from the nominal V_{REFP} = 1.25V and V_{REFN} = 0V will result in a deviation from the ideal transfer function. This also impacts the accuracy of the internal sensor measurements (i.e., temperature and power supply). However, for external ratiometric type applications allowing reference to vary by ±4% is permitted.

SYSMON I2C/PMBus Interfaces

Table 79: **SYSMON I2C Fast Mode Interface Switching Characteristics**

Symbol	Description[1]	Min	Max	Units
T_{SMFCKL}	SCL Low time	1.3	–	µs
T_{SMFCKH}	SCL High time	0.6	–	µs
T_{SMFCKO}	SDAO clock-to-out delay	–	900	ns
T_{SMFDCK}	SDAI setup time	100	–	ns
F_{SMFCLK}	SCL clock frequency	–	400	kHz

Notes:

1. The test conditions are configured to the LVCMOS 1.8V I/O standard.

Table 80: **SYSMON I2C Standard Mode Interface Switching Characteristics**

Symbol	Description[1]	Min	Max	Units
T_{SMSCKL}	SCL Low time	4.7	–	µs
T_{SMSCKH}	SCL High time	4.0	–	µs
T_{SMSCKO}	SDAO clock-to-out delay	–	3450	ns
T_{SMSDCK}	SDAI setup time	250	–	ns
F_{SMSCLK}	SCL clock frequency	–	100	kHz

Notes:

1. The test conditions are configured to the LVCMOS 1.8V I/O standard.

Configuration Switching Characteristics

Table 81: **Configuration Switching Characteristics**

Symbol	Description		Speed Grade and V_{CCINT} Operating Voltages				Units
			0.90V	0.85V		0.72V	
			-3	-2	-1	-2	
Power-up Timing Characteristics							
T_{PL}	Program latency for XCVU19P		12	12	12	12	ms, Max
	Program latency for all other devices		8.5	8.5	8.5	8.5	ms, Max
T_{POR}	Power-on reset (40 ms maximum ramp rate)		65	65	65	65	ms, Max
			0	0	0	0	ms, Min
	Power-on reset with POR override (2 ms maximum ramp rate)		15	15	15	15	ms, Max
			5	5	5	5	ms, Min
$T_{PROGRAM}$	Program pulse width		250	250	250	250	ns, Min
CCLK Output (Master Mode)							
T_{ICCK}	Master CCLK output delay from INIT_B		150	150	150	150	ns, Min
T_{MCCKL}[1]	Master CCLK clock Low time duty cycle		40/60	40/60	40/60	40/60	%, Min/Max
T_{MCCKH}	Master CCLK clock High time duty cycle		40/60	40/60	40/60	40/60	%, Min/Max
F_{MCCK}	Master BPI (x8/x16) SPI (x1/x2/x4) CCLK frequency	XCVU3P, XQVU3P, XCVU5P, XCVU7P, XQVU7P, XCVU9P	125	125	125	100	MHz, Max
	Master SPI (x1/x2/x4) CCLK frequency	XCVU11P, XQVU11P, XCVU13P, XCVU19P,XCVU27P, XCVU29P, XCVU31P, XCVU33P, XCVU35P, XCVU37P, XCVU45P, XCVU47P	125	125	125	100	MHz, Max
	Master BPI (x8/x16) SPI (x8) CCLK frequency	XCVU11P, XQVU11P, XCVU13P, XCVU19P, XCVU27P, XCVU29P, XCVU31P, XCVU33P, XCVU35P, XCVU37P, XCVU45P, XCVU47P	125	125	125	60	MHz, Max
F_{MCCK_START}	Master CCLK frequency at start of configuration		2.7	2.7	2.7	2.7	MHz, Typ
$F_{MCCKTOL}$	Frequency tolerance, master mode with respect to nominal CCLK		±15	±15	±15	±15	%, Max
CCLK Input (Slave Mode)							
T_{SCCKL}	Slave CCLK clock minimum Low time		2.5	2.5	2.5	2.5	ns, Min
T_{SCCKH}	Slave CCLK clock minimum High time		2.5	2.5	2.5	2.5	ns, Min

Table 81: **Configuration Switching Characteristics** *(cont'd)*

Symbol	Description		Speed Grade and V_{CCINT} Operating Voltages				Units
			0.90V	0.85V		0.72V	
			-3	-2	-1	-2	
F_{SCCK}	Slave Serial/ Slave SelectMAP CCLK frequency	XCVU3P, XQVU3P, XCVU5P, XCVU7P, XQVU7P, XCVU9P	125	125	125	100	MHz, Max
	Slave Serial CCLK frequency	XCVU11P, XQVU11P, XCVU13P, XCVU19P, XCVU27P, XCVU29P, XCVU31P, XCVU33P, XCVU35P, XCVU37P, XCVU45P, XCVU47P	125	125	125	100	MHz, Max
	Slave SelectMAP CCLK frequency	XCVU11P, XQVU11P, XCVU13P, XCVU19P, XCVU27P, XCVU29P, XCVU31P, XCVU33P, XCVU35P, XCVU37P, XCVU45P, XCVU47P	125	125	125	60	MHz, Max
EMCCLK Input (Master Mode)							
T_{EMCCKL}	External master CCLK Low time		2.5	2.5	2.5	2.5	ns, Min
T_{EMCCKH}	External master CCLK High time		2.5	2.5	2.5	2.5	ns, Min
F_{EMCCK}	External master CCLK frequency	XCVU3P, XQVU3P, XCVU5P, XCVU7P, XQVU7P, XCVU9P	125	125	125	100	MHz, Max
		XCVU11P, XQVU11P, XCVU13P, XCVU19P, XCVU27P, XCVU29P, XCVU31P, XCVU33P, XCVU35P, XCVU37P, XCVU45P, XCVU47P	125	125	125	60	MHz, Max
Internal Configuration Access Port							
F_{ICAPCK}	Internal configuration access port (ICAPE3)	XCVU3P, XQVU3P	200	200	200	150	MHz, Max
	Master SLR ICAPE3 accessing entire device	XCVU5P, XCVU7P, XQVU7P, XCVU9P, XCVU11P, XQVU11P, XCVU13P, XCVU19P, XCVU27P, XCVU29P, XCVU31P, XCVU33P, XCVU35P, XCVU37P, XCVU45P, XCVU47P	125	125	125	125	MHz, Max
	SLR ICAPE3 accessing local SLR	XCVU5P, XCVU7P, XQVU7P, XCVU9P, XCVU11P, XQVU11P, XCVU13P, XCVU19P, XCVU27P, XCVU29P, XCVU31P, XCVU33P, XCVU35P, XCVU37P, XCVU45P, XCVU47P	200	200	200	150	MHz, Max
Slave Serial Mode Programming Switching							
T_{DCCK}/T_{CCKD}	D_{IN} setup/hold		3.0/0	3.0/0	3.0/0	4.0/0	ns, Min
T_{CCO}	D_{OUT} clock to out		8.0	8.0	8.0	9.0	ns, Max

Table 81: **Configuration Switching Characteristics** *(cont'd)*

Symbol	Description		Speed Grade and V_{CCINT} Operating Voltages				Units
			0.90V	0.85V		0.72V	
			-3	-2	-1	-2	
SelectMAP Mode Programming Switching							
T_{SMDCCK}/T_{SMCCKD}	D[31:00] setup/hold	XCVU3P, XQVU3P, XCVU5P, XCVU7P, XQVU7P, XCVU9P	4.0/0	4.0/0	4.0/0	5.0/0	ns, Min
		XCVU11P, XQVU11P, XCVU13P, XCVU19P, XCVU27P, XCVU29P, XCVU31P, XCVU33P, XCVU35P, XCVU37P, XCVU45P, XCVU47P	4.5/0	4.5/0	4.5/0	8.0/0	ns, Min
$T_{SMCSCCK}/T_{SMCCKCS}$	CSI_B setup/hold	XCVU3P, XQVU3P, XCVU5P, XCVU7P, XQVU7P, XCVU9P	4.0/0	4.0/0	4.0/0	5.0/0	ns, Min
		XCVU11P, XQVU11P, XCVU13P, XCVU19P, XCVU27P, XCVU29P, XCVU31P, XCVU33P, XCVU35P, XCVU37P, XCVU45P, XCVU47P	4.5/0	4.5/0	4.5/0	7.5/0	ns, Min
T_{SMWCCK}/T_{SMCCKW}	RDWR_B setup/hold	XCVU3P, XQVU3P, XCVU5P, XCVU7P, XQVU7P, XCVU9P	10.0/0	10.0/0	10.0/0	11.0/0	ns, Min
		XCVU11P, XQVU11P, XCVU13P, XCVU19P, XCVU27P, XCVU29P, XCVU31P, XCVU33P, XCVU35P, XCVU37P, XCVU45P, XCVU47P	11.0/0	11.0/0	11.0/0	17.0/0	ns, Min
$T_{SMCKCSO}$	CSO_B clock to out (330Ω pull-up resistor required)	XCVU3P, XQVU3P, XCVU5P, XCVU7P, XQVU7P, XCVU9P	7.0	7.0	7.0	7.0	ns, Max
		XCVU11P, XQVU11P, XCVU13P, XCVU19P, XCVU27P, XCVU29P, XCVU31P, XCVU33P, XCVU35P, XCVU37P, XCVU45P, XCVU47P	7.0	7.0	7.0	10.0	ns, Max
T_{SMCO}	D[31:00] clock to out in readback	XCVU3P, XQVU3P, XCVU5P, XCVU7P, XQVU7P, XCVU9P	8.0	8.0	8.0	8.0	ns, Max
		XCVU11P, XQVU11P, XCVU13P, XCVU19P, XCVU27P, XCVU29P, XCVU31P, XCVU33P, XCVU35P, XCVU37P, XCVU45P, XCVU47P	8.0	8.0	8.0	10.0	ns, Max
F_{RBCCK}	Readback frequency	XCVU3P, XQVU3P, XCVU5P, XCVU7P, XQVU7P, XCVU9P	125	125	125	100	MHz, Max
		XCVU11P, XQVU11P, XCVU13P, XCVU19P, XCVU27P, XCVU29P, XCVU31P, XCVU33P, XCVU35P, XCVU37P, XCVU45P, XCVU47P	125	125	125	60	MHz, Max

Table 81: **Configuration Switching Characteristics** *(cont'd)*

Symbol	Description		Speed Grade and V_{CCINT} Operating Voltages				Units
			0.90V	0.85V		0.72V	
			-3	-2	-1	-2	
Boundary-Scan Port Timing Specifications							
T_{TAPTCK}/T_{TCKTAP}	TMS and TDI setup/hold	XCVU3P, XQVU3P	3.0/2.0	3.0/2.0	3.0/2.0	3.0/2.0	ns, Min
		XCVU5P, XCVU7P, XQVU7P, XCVU9P, XCVU11P, XQVU11P, XCVU13P, XCVU19P, XCVU27P, XCVU29P, XCVU31P, XCVU33P, XCVU35P, XCVU37P, XCVU45P, XCVU47P	8.5/2.0	8.5/2.0	8.5/2.0	8.5/2.0	ns, Min
T_{TCKTDO}	TCK falling edge to TDO output	XCVU3P, XQVU3P	7.0	7.0	7.0	7.0	ns, Max
		XCVU5P, XCVU7P, XQVU7P, XCVU9P, XCVU11P, XQVU11P, XCVU13P, XCVU19P, XCVU27P, XCVU29P, XCVU31P, XCVU33P, XCVU35P, XCVU37P, XCVU45P, XCVU47P	15.0	15.0	15.0	15.0	ns, Max
F_{TCK}	TCK frequency	XCVU3P, XQVU3P	66	66	66	66	MHz, Max
		XCVU5P, XCVU7P, XQVU7P, XCVU9P, XCVU11P, XQVU11P, XCVU13P, XCVU19P, XCVU27P, XCVU29P, XCVU31P, XCVU33P, XCVU35P, XCVU37P, XCVU45P, XCVU47P	20	20	20	20	MHz, Max
BPI Master Flash Mode Programming Switching							
T_{BPICCO}	A[28:00], RS[1:0], FCS_B, FOE_B, FWE_B, ADV_B clock to out		10	10	10	10	ns, Max
T_{BPIDCC}/T_{BPICCD}	D[15:00] setup/hold	XCVU3P, XQVU3P, XCVU5P, XCVU7P, XQVU7P, XCVU9P	4.0/0	4.0/0	4.0/0	5.0/0	ns, Min
		XCVU11P, XQVU11P, XCVU13P, XCVU19P, XCVU27P, XCVU29P, XCVU31P, XCVU33P, XCVU35P, XCVU37P, XCVU45P, XCVU47P	4.5/0	4.5/0	4.5/0	8.0/0	ns, Min
SPI Master Flash Mode Programming Switching							
T_{SPIDCC}/T_{SPICCD}	D[03:00] setup/hold		3.0/0	3.0/0	3.0/0	4.0/0	ns, Min
T_{SPIDCC}/T_{SPICCD}	D[07:04] setup/hold	XCVU3P, XQVU3P, XCVU5P, XCVU7P, XQVU7P, XCVU9P	4.0/0	4.0/0	4.0/0	5.0/0	ns, Min
		XCVU11P, XQVU11P, XCVU13P, XCVU19P, XCVU27P, XCVU29P, XCVU31P, XCVU33P, XCVU35P, XCVU37P, XCVU45P, XCVU47P	4.5/0	4.5/0	4.5/0	8.0/0	ns, Min
T_{SPICCM}	MOSI clock to out		8.0	8.0	8.0	8.0	ns, Max
$T_{SPICCM2}$	D[04] clock to out		10.0	10.0	10.0	10.0	ns, Max
$T_{SPICCFC}$	FCS_B clock to out		8.0	8.0	8.0	8.0	ns, Max

Table 81: **Configuration Switching Characteristics** *(cont'd)*

Symbol	Description	Speed Grade and V_{CCINT} Operating Voltages				Units
		0.90V	0.85V		0.72V	
		-3	-2	-1	-2	
$T_{SPICCFC2}$	FCS2_B clock to out	10.0	10.0	10.0	10.0	ns, Max
DNA Port Switching						
F_{DNACK}	DNA port frequency	200	200	200	175	MHz, Max
STARTUPE3 Ports						
$T_{USRCCLKO}$	STARTUPE3 USRCCLKO input port to CCLK pin output delay	0.25/6.00	0.25/6.50	0.25/7.50	0.25/9.00	ns, Min/Max
T_{DO}	DO[3:0] ports to D03-D00 pins output delay	0.25/6.70	0.25/7.70	0.25/8.40	0.25/10.00	ns, Min/Max
T_{DTS}	DTS[3:0] ports to D03-D00 pins 3-state delays	0.25/6.70	0.25/7.70	0.25/8.40	0.25/10.00	ns, Min/Max
T_{FCSBO}	FCSBO port to FCS_B pin output delay	0.25/6.90	0.25/7.50	0.25/8.40	0.25/9.80	ns, Min/Max
T_{FCSBTS}	FCSBTS port to FCS_B pin 3-state delay	0.25/6.90	0.25/7.50	0.25/8.40	0.25/9.80	ns, Min/Max
$T_{USRDONEO}$	USRDONEO port to DONE pin output delay	0.25/8.60	0.25/9.40	0.25/10.50	0.25/12.10	ns, Min/Max
$T_{USRDONETS}$	USRDONETS port to DONE pin 3-state delay	0.25/8.60	0.25/9.40	0.25/10.50	0.25/12.10	ns, Min/Max
T_{DI}	D03-D00 pins to DI[3:0] ports input delay	0.5/2.6	0.5/3.1	0.5/3.5	0.5/4.0	ns, Min/Max
$F_{CFGMCLK}$	STARTUPE3 CFGMCLK output frequency	50	50	50	50	MHz, Typ
$F_{CFGMCLKTOL}$	STARTUPE3 CFGMCLK output frequency tolerance	±15	±15	±15	±15	%, Max
T_{DCI_MATCH}	Specifies a stall in the startup cycle until the digitally controlled impedance (DCI) match signals are asserted	4	4	4	4	ms, Max

Notes:

1. When the CCLK is sourced from the EMCCLK pin with a divide-by-one setting, the external EMCCLK must meet this duty-cycle requirement.

Revision History

Date	Version	Description of Revisions
3/13/2020	1.15	Updated the power-on current values for XCVU19P in Table 7. In Table 62, updated Note 2. Added the program latency (T_{PL}) for the XCVU19P to Table 81.
11/25/2019	1.14	Updated Table 20, Table 21, and Table 22 to production release: XCVU27P and XCVU29P devices in -3E, -2LE (V_{CCINT} = 0.85V), and -2LE (V_{CCINT} = 0.72V) speed/voltage grades and all packages using Vivado Design Suite 2019.2 v1.28
9/30/2019	1.13	Updated Table 20, Table 21, and Table 22 to production release: XCVU27P and XCVU29P devices in -1E, -1I, -2E and -2I speed/voltage grades and all packages using Vivado Design Suite 2019.1.3 v1.27 XCVU47P and XCVU49P devices in -3E, -2E, -2LE, -1E (V_{CCINT} = 0.85V) and -2LE (V_{CCINT} = 0.72V)) using Vivado Design Suite 2019.1 v1.25 Deleted GTM transceiver support for DC coupled operation in Table 60. Updated PAM4 and NRZ specifications in Table 60, Table 62, Table 68, and Table 69. Updated the specifications in Table 66. In Table 68, deleted support for TX lane-to-lane skew and TX phase alignment. Removed the *GTM Transceiver Clock Output Level Specification* table. Revised the GTM Transceiver Electrical Compliance table.
8/21/2019	1.12	Added the XCVU19P device in the FSVA3824 and FSVB3824 packages where applicable. Increased the maximum line rate of the QPLL0 -1 (V_{CCINT} = 0.85V) output divider 1 in Table 51 and updated Notes 3 and 4. Revised Table 62: GTM Transceiver Performance and the GTM Transceiver Electrical Compliance table.

Date	Version	Description of Revisions
7/19/2019	1.11	Updated Table 20, Table 21, and Table 22 to add the XCVU45P and XCVU47P devices, updated all speed file versions to Vivado Design Suite 2019.1.1 v1.26, and production release the XCVU31P, XCVU33P, XCVU35P, and XCVU37P devices in the -3 (V_{CCINT} = 0.90V) speed/voltage grade in Vivado Design Suite 2019.1 v1.25. Added the maximum reflow soldering temperature (T_{SOL}) values for the FFRC1517, FFRA2104, FFRB2104, and FFRC2104 packages in Table 1. Updated Note 4 in Table 3. Updated the GTM sequence in Power-On/Off Power Supply Sequencing.
4/26/2019	1.10	Updated Table 20, Table 21, and Table 22 to production release the following devices in the Vivado Design Suite. XCVU31P: 2018.3.1 v1.24 (-2E, -2LE, -1E (V_{CCINT} = 0.85V) and -2LE (V_{CCINT} = 0.72V)) XCVU33P: 2018.3.1 v1.24 (-2E, -2LE, -1E (V_{CCINT} = 0.85V) and -2LE (V_{CCINT} = 0.72V)) XCVU37P: 2018.3.1 v1.24 (-2E, -2LE, -1E (V_{CCINT} = 0.85V) and -2LE (V_{CCINT} = 0.72V)) XCVU39P: 2018.3.1 v1.24 (-2E, -2LE, -1E (V_{CCINT} = 0.85V) and -2LE (V_{CCINT} = 0.72V)) XQVU3P: 2018.3 v1.23 XQVU7P: 2018.3.1 v1.23 XQVU11P: 2018.3.1 v1.23 In Table 1, revised the T_{STG}. Added Note 14 in Table 2. Updated the VU3xP values in Table 7. Added LVDS component mode notes to FPGA Logic Performance Characteristics.
1/04/2019	1.9	Added the XCVU27P and XCVU29P devices. Also added the GTM Transceiver Specifications. Updated the calculations in Table 7: Power-on Current by Device Updated the speed specification version by device for Table 20 to Vivado Design Suite 2018.3. Updated the V_{IDIFF} description in Table 19. In Table 56, updated Note 2. Removed PCI Express Gen4 support in Table 75: Maximum Performance for PCIE4-based PCI Express Designs and Notes 1, Note 2, and Note 3. In Table 76: Maximum Performance for PCIE4C-based PCI Express and CCIX Designs, removed Notes 1, 2, 3, 4, and 5.
8/01/2018	1.8	Added XCVU3xP data to Table 6. Updated the speed specification version by device for Table 20 to Vivado Design Suite 2018.2.1. In Table 24, added Note 4 to the LVDS RX DDR maximum data. In Table 74, revised the calculated values from 322.223 to 322.266.
6/18/2018	1.7	Revised the speed grade -1 (V_{CCINT} = 0.85) F_{GTYMAX} in Table 51, which also revised values in Table 56 and added Note 2. Revised F_{ACLK} and added F_{HBM} to Table 77.
4/09/2018	1.6	Added the XCVU31P, XCVU33P, XCVU35P, and XCVU37P devices throughout the data sheet. Added the specifications for High Bandwidth Memory to Table 1, Table 2, Table 6, the Power-On/Off Power Supply Sequencing section, Table 7, Table 8, and Table 77. Updated Table 20, Table 21, and Table 22 to production release the following devices in Vivado Design Suite 2018.1 v1.19. XCVU3P: -3E (V_{CCINT} = 0.90V) XCVU5P: -3E (V_{CCINT} = 0.90V) XCVU7P: -3E (V_{CCINT} = 0.90V) XCVU9P: -3E (V_{CCINT} = 0.90V) Added Table 43 and Table 46. Added Note 2 and Note 3 to Table 45. Revised Table 74 to add specifc mode specifications and remove Note 1. Added Table 76.
2/07/2018	1.5	Updated Table 20, Table 21, and Table 22 to production release the following devices in Vivado Design Suite 2017.4.1 v1.18. XCVU11P: -3E (V_{CCINT} = 0.90V) XCVU13P: -3E (V_{CCINT} = 0.90V) Revised some of the -3E (V_{CCINT} = 0.90V) speed files in Table 40, Table 41, Table 42, and Table 44. Revised the D_{VPPOUT} control signal in Table 48.

Date	Version	Description of Revisions
11/28/2017	1.4	In Table 1, corrected the minimum voltage for the System Monitor section. Updated Table 20, Table 21, and Table 22 to production release all the -2LE (V_{CCINT} = 0.85V) and -2LE (V_{CCINT} = 0.72V) devices/speed/temperature grades in Vivado Design Suite 2017.3.1. Revised the F_{REFCLK} descriptions in Table 35. Revised some of the -3E and -2LE (V_{CCINT} = 0.72V) speed files in Table 40, Table 41, Table 42, Table 44, and added package values to Table 47. Revised the $F_{GTYQRANGE2}$ -1 speed grade minimum in Table 51. Added $T_{SPICCM2}$ and $T_{SPICCFC2}$ to Table 81.
10/02/2017	1.3	Updated Table 1 to include maximum T_{SOL} Updated Table 20, Table 21, and for dry rework and reflow soldering.Table 22 to production release the following devices/speed/temperature grades in Vivado Design Suite 2017.2.1. XCVU11P: -2E, -2I, -1E, -1I XCVU13P: -2E, -2I, -1E, -1I In Table 29, revised the $T_{OUTBUF_DELAY_O_PAD}$ -2 (V_{CCINT} for dry r = 0.85V) values for DIFF_SSTL135_S, DIFF_SSTL15_DCI_S, DIFF_SSTL15_S, DIFF_SSTL18_I_DCI_S, and DIFF_SSTL18_I_S. Revised some of the -3E and -2LE (V_{CCINT} = 0.72V) speed files in Table 29, Table 40, Table 41, and Table 42.
6/27/2017	1.2	Updated Table 20, Table 21, and Table 22 to production release the following devices/speed/temperature grades in Vivado Design Suite 2017.2. XCVU5P: -2E, -2I, -1E, -1I XCVU7P: -2E, -2I, -1E, -1I XCVU9P: -2E, -2I, -1E, -1I Updated Note 12 in Table 2 for clarity. In Table 3, removed unsupported voltages (2.5V and 3.3V) from I_{RPU} and I_{RPD}. Added Note 3 to Table 27. Revised the -3E and -2LE (V_{CCINT} = 0.72V) speed files in Table 29, Table 30, Table 40, Table 41, Table 42, and Table 44. In Table 31 removed from the input delay measurement methodology section the following class II I/O standards: SSTL135_II, SSTL15_II, SSTL18_II, DIFF_SSTL135_II, DIFF_SSTL15_II and DIFF_SSTL18_II. Updated the F_{MAX} symbol names and values in Table 34. Added Note 1 to Table 36. Added Note 3 to Table 75. In Table 81, updated the -2LE (V_{CCINT} = 0.72V) specifications for F_{MCCK}, F_{SCCK}, F_{EMCCK}, F_{ICAPCK}, T_{SMDCCK}/T_{SMCCKD}, $T_{SMCKCSO}$, T_{SMCO}, F_{RBCCK}, T_{BPIDCC}/T_{BPICCD}, and T_{SPIDCC}/T_{SPICCD}.
4/19/2017	1.1	Updated the Summary description. In Table 1, updated Note 6, added data, and added Note 7, Note 8, and Note 9. Updated and added data to Table 2 through Table 7. Removed the -1LI speed grade. Updated Table 20, Table 21, and Table 22 to production release in Vivado Design Suite 2017.1 for the XCVU3P: -2E, -2I, -1E, -1I. Updated Table 19. Added Note 1 to Table 21. Updated Table 23, Table 24, Table 29, Table 30, Table 31, Table 33, Table 34, and Table 35. Added Table 25. Added MMCM_F_{DPRCLK_MAX} to Table 38 and PLL_F_{DPRCLK_MAX} to Table 39. Updated to Vivado Design Suite 2017.1 Table 40, Table 41, Table 42, and Table 44. Added data to Table 45 and Table 47. Updated the GTY Transceiver Specifications section. Revised the Integrated Interface Block for Interlaken section. Updated the System Monitor Specifications section adding notes to the tables. Updated the Configuration Switching Characteristics section. Removed the eFUSE Programming Conditions table and added the specifications to Table 2 and Table 3. Updated the Automotive Applications Disclaimer.
4/20/2016	1.0	Initial Xilinx release.

Please Read: Important Legal Notices

The information disclosed to you hereunder (the "Materials") is provided solely for the selection and use of Xilinx products. To the maximum extent permitted by applicable law: (1) Materials are made available "AS IS" and with all faults, Xilinx hereby DISCLAIMS ALL WARRANTIES AND CONDITIONS, EXPRESS, IMPLIED, OR STATUTORY, INCLUDING BUT NOT LIMITED TO WARRANTIES OF MERCHANTABILITY, NON-INFRINGEMENT, OR FITNESS FOR ANY PARTICULAR PURPOSE; and (2) Xilinx shall not be liable (whether in contract or tort, including negligence, or under any other theory of liability) for any loss or damage of any kind or nature related to, arising under, or in connection with, the Materials (including your use of the Materials), including for any direct, indirect, special, incidental, or consequential loss or damage (including loss of data, profits, goodwill, or any type of loss or damage suffered as a result of any action brought by a third party) even if such damage or loss was reasonably foreseeable or Xilinx had been advised of the possibility of the same. Xilinx

assumes no obligation to correct any errors contained in the Materials or to notify you of updates to the Materials or to product specifications. You may not reproduce, modify, distribute, or publicly display the Materials without prior written consent. Certain products are subject to the terms and conditions of Xilinx's limited warranty, please refer to Xilinx's Terms of Sale which can be viewed at https://www.xilinx.com/legal.htm#tos; IP cores may be subject to warranty and support terms contained in a license issued to you by Xilinx. Xilinx products are not designed or intended to be fail-safe or for use in any application requiring fail-safe performance; you assume sole risk and liability for use of Xilinx products in such critical applications, please refer to Xilinx's Terms of Sale which can be viewed at https://www.xilinx.com/legal.htm#tos.

AUTOMOTIVE APPLICATIONS DISCLAIMER

AUTOMOTIVE PRODUCTS (IDENTIFIED AS "XA" IN THE PART NUMBER) ARE NOT WARRANTED FOR USE IN THE DEPLOYMENT OF AIRBAGS OR FOR USE IN APPLICATIONS THAT AFFECT CONTROL OF A VEHICLE ("SAFETY APPLICATION") UNLESS THERE IS A SAFETY CONCEPT OR REDUNDANCY FEATURE CONSISTENT WITH THE ISO 26262 AUTOMOTIVE SAFETY STANDARD ("SAFETY DESIGN"). CUSTOMER SHALL, PRIOR TO USING OR DISTRIBUTING ANY SYSTEMS THAT INCORPORATE PRODUCTS, THOROUGHLY TEST SUCH SYSTEMS FOR SAFETY PURPOSES. USE OF PRODUCTS IN A SAFETY APPLICATION WITHOUT A SAFETY DESIGN IS FULLY AT THE RISK OF CUSTOMER, SUBJECT ONLY TO APPLICABLE LAWS AND REGULATIONS GOVERNING LIMITATIONS ON PRODUCT LIABILITY.

FPGAMALL
Authorized Distributor

OUR CERTIFICATE

A long-term cooperative relationship can be built between global customers and us by providing excellent products

Business Type	Trading Company, Distributor/Wholesaler
Main Products	Electronic Integrated Circuit
Certifications	ISO9001
Total Annual Revenue	US$2.5 Million - US$5 Million
Country / Region	Hongkong, China
Total Employees	100 - 200 People
Year Established	2018
Main Markets	North America South Asia Western Europe

sales@fpgamall.com
+00852-56428680