FPGAMALL
Authorized Distributor

https://www.fpgamall.com

THE DATASHEET OF FPGA

sales@fpgamall.com
+00852-56428680

Zynq UltraScale+ MPSoC Data Sheet: DC and AC Switching Characteristics

DS925 (v1.17) March 13, 2020 **Product Specification**

Summary

The Xilinx® Zynq® UltraScale+™ MPSoCs are available in -3, -2, -1 speed grades, with -3E devices having the highest performance. The -2LE and -1LI devices can operate at a V_{CCINT} voltage at 0.85V or 0.72V and are screened for lower maximum static power. When operated at V_{CCINT} = 0.85V, using -2LE and -1LI devices, the speed specification for the L devices is the same as the -2I or -1I speed grades. When operated at V_{CCINT} = 0.72V, the -2LE and -1LI performance and static and dynamic power is reduced.

DC and AC characteristics are specified in extended (E), industrial (I), automotive (Q), and military (M) temperature ranges. Except the operating temperature range or unless otherwise noted, all the DC and AC electrical parameters are the same for a particular speed grade (that is, the timing characteristics of a -1 speed grade extended device are the same as for a -1 speed grade industrial device). However, only selected speed grades and/or devices are available in each temperature range.

The XQ references in this data sheet are specific to the devices available in XQ Ruggedized packages. See the *Defense-Grade UltraScale Architecture Data Sheet: Overview* (DS895) for further information on XQ Defense-grade part numbers, packages, and ordering information.

All supply voltage and junction temperature specifications are representative of worst-case conditions. The parameters included are common to popular designs and typical applications.

This data sheet, part of an overall set of documentation on the Zynq UltraScale+ MPSoCs, is available on the Xilinx website at www.xilinx.com/documentation.

DC Characteristics

Absolute Maximum Ratings

Table 1: **Absolute Maximum Ratings**

Symbol	Description[1]	Min	Max	Units
Processor System (PS)				
$V_{CC_PSINTFP}$	PS primary logic full-power domain supply voltage	–0.500	1.000	V
$V_{CC_PSINTLP}$	PS primary logic low-power domain supply voltage	–0.500	1.000	V
V_{CC_PSAUX}	PS auxiliary supply voltage	–0.500	2.000	V

© Copyright 2015-2020 Xilinx, Inc. Xilinx, the Xilinx logo, Alveo, Artix, Kintex, Spartan, Versal, Virtex, Vivado, Zynq, and other designated brands included herein are trademarks of Xilinx in the United States and other countries. AMBA, AMBA Designer, Arm, ARM1176JZ-S, CoreSight, Cortex, PrimeCell, Mali, and MPCore are trademarks of Arm Limited in the EU and other countries. PCI, PCIe, and PCI Express are trademarks of PCI-SIG and used under license. All other trademarks are the property of their respective owners.

Table 1: **Absolute Maximum Ratings** *(cont'd)*

Symbol	Description[1]	Min	Max	Units
$V_{CC_PSINTFP_DDR}$	PS DDR controller and PHY supply voltage	–0.500	1.000	V
V_{CC_PSADC}	PS SYSMON ADC supply voltage relative to GND_PSADC	–0.500	2.000	V
V_{CC_PSPLL}	PS PLL supply voltage	–0.500	1.320	V
$V_{PS_MGTRAVCC}$	PS-GTR supply voltage	–0.500	1.000	V
$V_{PS_MGTRAVTT}$	PS-GTR termination voltage	–0.500	2.000	V
$V_{PS_MGTREFCLK}$	PS-GTR reference clock input voltage	–0.500	1.100	V
V_{PS_MGTRIN}	PS-GTR receiver input voltage	–0.500	1.100	V
V_{CCO_PSDDR}	PS DDR I/O supply voltage	–0.500	1.650	V
$V_{CC_PSDDR_PLL}$	PS DDR PLL supply voltage	–0.500	2.000	V
V_{CCO_PSIO}	PS I/O supply	–0.500	3.630	V
V_{PSIN}[2]	PS I/O input voltage	–0.500	V_{CCO_PSIO} + 0.550	V
	PS DDR I/O input voltage	–0.500	V_{CCO_PSDDR} + 0.550	V
V_{CC_PSBATT}	PS battery-backed RAM and battery-backed real-time clock (RTC) supply voltage	–0.500	2.000	V
Programmable Logic (PL)				
V_{CCINT}	Internal supply voltage	–0.500	1.000	V
V_{CCINT_IO}[3]	Internal supply voltage for the I/O banks	–0.500	1.000	V
V_{CCAUX}	Auxiliary supply voltage	–0.500	2.000	V
V_{CCBRAM}	Supply voltage for the block RAM memories	–0.500	1.000	V
V_{CCO}	Output drivers supply voltage for HD I/O banks	–0.500	3.400	V
	Output drivers supply voltage for HP I/O banks	–0.500	2.000	V
V_{CCAUX_IO}[4]	Auxiliary supply voltage for the I/O banks	–0.500	2.000	V
V_{REF}	Input reference voltage	–0.500	2.000	V
V_{IN}[2, 5, 6]	I/O input voltage for HD I/O banks	–0.550	V_{CCO} + 0.550	V
	I/O input voltage for HP I/O banks	–0.550	V_{CCO} + 0.550	V
I_{DC}	Available output current at the pad	–20	20	mA
I_{RMS}	Available RMS output current at the pad	–20	20	mA
GTH or GTY Transceiver[7]				
$V_{MGTAVCC}$	Analog supply voltage for transceiver circuits	–0.500	1.000	V
$V_{MGTAVTT}$	Analog supply voltage for transceiver termination circuits	–0.500	1.300	V
$V_{MGTVCCAUX}$	Auxiliary analog Quad PLL (QPLL) voltage supply for transceivers	–0.500	1.900	V
$V_{MGTREFCLK}$	Transceiver reference clock absolute input voltage	–0.500	1.300	V
$V_{MGTAVTTRCAL}$	Analog supply voltage for the resistor calibration circuit of the transceiver column	–0.500	1.300	V
V_{IN}	Receiver (RXP/RXN) and transmitter (TXP/TXN) absolute input voltage	–0.500	1.200	V
$I_{DCIN\text{-}FLOAT}$	DC input current for receiver input pins DC coupled RX termination = floating[8]	–	10	mA
$I_{DCIN\text{-}MGTAVTT}$	DC input current for receiver input pins DC coupled RX termination = $V_{MGTAVTT}$	–	10	mA
$I_{DCIN\text{-}GND}$	DC input current for receiver input pins DC coupled RX termination = GND[9]	–	0	mA
$I_{DCIN\text{-}PROG}$	DC input current for receiver input pins DC coupled RX termination = programmable[10]	–	0	mA

Table 1: **Absolute Maximum Ratings** *(cont'd)*

Symbol	Description[1]	Min	Max	Units
$I_{DCOUT-FLOAT}$	DC output current for transmitter pins DC coupled RX termination = floating	–	6	mA
$I_{DCOUT-MGTAVTT}$	DC output current for transmitter pins DC coupled RX termination = $V_{MGTAVTT}$	–	6	mA
Video Codec Unit				
V_{CCINT_VCU}	Internal supply voltage for the video codec unit	–0.500	1.000	V
PL System Monitor				
V_{CCADC}	PL System Monitor supply relative to GNDADC	–0.500	2.000	V
V_{REFP}	PL System Monitor reference input relative to GNDADC	–0.500	2.000	V
Temperature[11]				
T_{STG}	Storage temperature (ambient)	–65	150	°C
T_{SOL}	Maximum dry rework soldering temperature	–	260	°C
	Maximum reflow soldering temperature for SBVB484, SFVA625, and SFVC784 packages	–	250	°C
	Maximum reflow soldering temperature for FBVB900, FFVC900, FFVB1156, FFVC1156, FFVB1517, FFVF1517, FFVC1760, FFVD1760, and FFVE1924 packages	–	245	°C
	Maximum reflow soldering temperature for SFRA484, SFRC784, FFRB900, FFRC900, FFRB1156, FFRC1156, FFRB1517, and FFRC1760 packages	–	225	°C
T_j	Maximum junction temperature	–	125	°C

Notes:

1. Stresses beyond those listed under Absolute Maximum Ratings might cause permanent damage to the device. These are stress ratings only, and functional operation of the device at these or any other conditions beyond those listed under Operating Conditions is not implied. Exposure to Absolute Maximum Ratings conditions for extended periods of time might affect device reliability.
2. When operating outside of the recommended operating conditions, refer to Table 6, Table 7, and Table 8 for maximum overshoot and undershoot specifications.
3. V_{CCINT_IO} must be connected to V_{CCBRAM}.
4. V_{CCAUX_IO} must be connected to V_{CCAUX}.
5. The lower absolute voltage specification always applies.
6. For I/O operation, see the *UltraScale Architecture SelectIO Resources User Guide* (UG571).
7. For more information on supported GTH or GTY transceiver terminations see the *UltraScale Architecture GTH Transceivers User Guide* (UG576) or *UltraScale Architecture GTY Transceivers User Guide* (UG578).
8. AC coupled operation is not supported for RX termination = floating.
9. For GTY transceivers, DC coupled operation is not supported for RX termination = GND.
10. DC coupled operation is not supported for RX termination = programmable.
11. For soldering guidelines and thermal considerations, see the *Zynq UltraScale+ Device Packaging and Pinouts Product Specification User Guide* (UG1075).

Recommended Operating Conditions

Table 2: **Recommended Operating Conditions**

Symbol	Description[1, 2]	Min	Typ	Max	Units
Processor System					
$V_{CC_PSINTFP}$[3]	PS full-power domain supply voltage	0.808	0.850	0.892	V
	For -1LI and -2LE (V_{CCINT} = 0.72V) devices: PS full-power domain supply voltage	0.808	0.850	0.892	V
	For -3E devices: PS full-power domain supply voltage	0.873	0.900	0.927	V
$V_{CC_PSINTLP}$	PS low-power domain supply voltage	0.808	0.850	0.892	V
	For -1LI and -2LE (V_{CCINT} = 0.72V) devices: PS low-power domain supply voltage	0.808	0.850	0.892	V
	For -3E devices: PS low-power domain supply voltage	0.873	0.900	0.927	V
V_{CC_PSAUX}	PS auxiliary supply voltage	1.710	1.800	1.890	V
$V_{CC_PSINTFP_DDR}$[3]	PS DDR controller and PHY supply voltage	0.808	0.850	0.892	V
	For -1LI and -2LE (V_{CCINT} = 0.72V) devices: PS DDR controller and PHY supply voltage	0.808	0.850	0.892	V
	For -3E devices: PS DDR controller and PHY supply voltage	0.873	0.900	0.927	V
V_{CC_PSADC}	PS SYSMON ADC supply voltage relative to GND_PSADC	1.710	1.800	1.890	V
V_{CC_PSPLL}	PS PLL supply voltage	1.164	1.200	1.236	V
$V_{PS_MGTRAVCC}$[4]	PS-GTR supply voltage	0.825	0.850	0.875	V
$V_{PS_MGTRAVTT}$[4]	PS-GTR termination voltage	1.746	1.800	1.854	V
V_{CCO_PSDDR}[5]	PS DDR I/O supply voltage	1.06	–	1.575	V
$V_{CC_PSDDR_PLL}$	PS DDR PLL supply voltage	1.710	1.800	1.890	V
V_{CCO_PSIO}[6]	PS I/O supply	1.710	–	3.465	V
V_{PSIN}	PS I/O input voltage	–0.200	–	V_{CCO_PSIO} + 0.200	V
	PS DDR I/O input voltage	–0.200	–	V_{CCO_PSDDR} + 0.200	V
V_{CC_PSBATT}[7]	PS battery-backed RAM and battery-backed real-time clock (RTC) supply voltage	1.200	–	1.500	V
Programmable Logic					
V_{CCINT}	PL internal supply voltage	0.825	0.850	0.876	V
	For -1LI and -2LE (V_{CCINT} = 0.72V) devices: PL internal supply voltage	0.698	0.720	0.742	V
	For -3E devices: PL internal supply voltage	0.873	0.900	0.927	V
V_{CCINT_IO}[8]	PL internal supply voltage for the I/O banks	0.825	0.850	0.876	V
	For -1LI and -2LE (V_{CCINT} = 0.72V) devices: PL internal supply voltage for the I/O banks	0.825	0.850	0.876	V
	For -3E devices: PL internal supply voltage for the I/O banks	0.873	0.900	0.927	V
V_{CCBRAM}	Block RAM supply voltage	0.825	0.850	0.876	V
	For -3E devices: block RAM supply voltage	0.873	0.900	0.927	V
V_{CCAUX}	Auxiliary supply voltage	1.746	1.800	1.854	V
V_{CCO},[9]	Supply voltage for HD I/O banks	1.140	–	3.400	V
	Supply voltage for HP I/O banks	0.950	–	1.900	V
V_{CCAUX_IO}[10]	Auxiliary I/O supply voltage	1.746	1.800	1.854	V
V_{IN}[11]	I/O input voltage	–0.200	–	V_{CCO} + 0.200	V

Table 2: **Recommended Operating Conditions** *(cont'd)*

Symbol	Description[1, 2]	Min	Typ	Max	Units
I_{IN}[12]	Maximum current through any PL or PS pin in a powered or unpowered bank when forward biasing the clamp diode	–	–	10	mA
GTH or GTY Transceiver					
$V_{MGTAVCC}$[13]	Analog supply voltage for the GTH or GTY transceiver	0.873	0.900	0.927	V
$V_{MGTAVTT}$[13]	Analog supply voltage for the GTH or GTY transmitter and receiver termination circuits	1.164	1.200	1.236	V
$V_{MGTVCCAUX}$[13]	Auxiliary analog QPLL voltage supply for the transceivers	1.746	1.800	1.854	V
$V_{MGTAVTTRCAL}$[13]	Analog supply voltage for the resistor calibration circuit of the GTH or GTY transceiver column	1.164	1.200	1.236	V
VCU					
V_{CCINT_VCU}	Internal supply voltage for the VCU	0.873	0.900	0.927	V
PL System Monitor					
V_{CCADC}	PL System Monitor supply relative to GNDADC	1.746	1.800	1.854	V
V_{REFP}	PL System Monitor externally supplied reference voltage relative to GNDADC	1.200	1.250	1.300	V
Temperature					
T_j[14]	Junction temperature operating range for extended (E) temperature devices[15]	0	–	100	°C
	Junction temperature operating range for industrial (I) temperature devices	–40	–	100	°C
	Junction temperature operating range for automotive (Q) temperature devices	–40	–	125	°C
	Junction temperature operating range for military (M) temperature devices	–55	–	125	°C
	Junction temperature operating range for eFUSE programming	–40	–	125	°C

Notes:

1. All voltages are relative to GND.
2. For the design of the power distribution system consult the *UltraScale Architecture PCB Design User Guide* (UG583).
3. $V_{CC_PSINTFP_DDR}$ must be tied to $V_{CC_PSINTFP}$.
4. Each voltage listed requires filtering as described in the *UltraScale Architecture PCB Design User Guide* (UG583).
5. Includes V_{CCO_PSDDR} of 1.2V, 1.35V, 1.5V at ±5% and 1.1V +0.07V/–0.04V depending upon the tolerances required by specific memory standards.
6. Applies to all PS I/O supply banks. Includes V_{CCO_PSIO} of 1.8V, 2.5V, and 3.3V at ±5%.
7. If the battery-backed RAM or RTC is not used, connect V_{CC_PSBATT} to GND or V_{CC_PSAUX}. The V_{CC_PSAUX} maximum of 1.89V is acceptable on an unused V_{CC_PSBATT}.
8. V_{CCINT_IO} must be connected to V_{CCBRAM}.
9. Includes V_{CCO} of 1.0V (HP I/O only), 1.2V, 1.35V, 1.5V, 1.8V, 2.5V (HD I/O only) at ±5%, and 3.3V (HD I/O only) at +3/–5%.
10. V_{CCAUX_IO} must be connected to V_{CCAUX}.
11. The lower absolute voltage specification always applies.
12. A total of 200 mA per bank should not be exceeded.
13. Each voltage listed requires filtering as described in the *UltraScale Architecture GTH Transceivers User Guide* (UG576) or the *UltraScale Architecture GTY Transceivers User Guide* (UG578).
14. Xilinx recommends measuring the T_j of a device using the system monitor as described in the *UltraScale Architecture System Monitor User Guide* (UG580). The SYSMON temperature measurement errors (that are described in Table 69 and Table 126) must be accounted for in your design. For example, when using the PL system monitor with an external reference of 1.25V, and when SYSMON reports 97°C, there is a measurement error ±3°C. A reading of 97°C is considered the maximum adjusted T_j (100°C – 3°C = 97°C).
15. Devices labeled with the speed/temperature grade of -2LE can operate for a limited time at a junction temperature between 100°C and 110°C. Timing parameters adhere to the same speed file at 110°C as they do below 110°C, regardless of operating voltage (nominal voltage of 0.85V or a low-voltage of 0.72V). Operation up to T_j = 110°C is limited to 1% of the device lifetime and can occur sequentially or at regular intervals as long as the total time does not exceed 1% of the device lifetime.

Available Speed Grades and Operating Voltages

Table 3 describes the speed grades per device and the V_{CCINT} operating supply voltages for the full-power, low-power, and DDR domains. For more information on selecting devices and speed grades, see the *UltraScale Architecture and Product Data Sheet: Overview* (DS890).

Table 3: **Available Speed Grades and Operating Voltages**

Speed Grade	V_{CCINT}	$V_{CC_PSINTLP}$	$V_{CC_PSINTFP}$	$V_{CC_PSINTFP_DDR}$	Units
-3E	0.90	0.90	0.90	0.90	V
-2E	0.85	0.85	0.85	0.85	V
-2I	0.85	0.85	0.85	0.85	V
-2LE	0.85	0.85	0.85	0.85	V
-1E	0.85	0.85	0.85	0.85	V
-1I	0.85	0.85	0.85	0.85	V
-1Q	0.85	0.85	0.85	0.85	V
-1M	0.85	0.85	0.85	0.85	V
-1LI	0.85	0.85	0.85	0.85	V
-2LE	0.72	0.85	0.85	0.85	V
-1LI	0.72	0.85	0.85	0.85	V

DC Characteristics Over Recommended Operating Conditions

Table 4: **DC Characteristics Over Recommended Operating Conditions**

Symbol	Description	Min	Typ[1]	Max	Units
V_{DRINT}	Data retention V_{CCINT} voltage (below which configuration data might be lost)	0.68	–	–	V
V_{DRAUX}	Data retention V_{CCAUX} voltage (below which configuration data might be lost)	1.5	–	–	V
I_{REF}	V_{REF} leakage current per pin	–	–	15	µA
I_L	Input or output leakage current per pin (sample-tested)[2]	–	–	15	µA
C_{IN}[3]	Die input capacitance at the pad (HP I/O)	–	–	3.1	pF
	Die input capacitance at the pad (HD I/O)	–	–	4.75	pF
I_{RPU}	Pad pull-up (when selected) at V_{IN} = 0V, V_{CCO} = 3.3V	75	–	190	µA
	Pad pull-up (when selected) at V_{IN} = 0V, V_{CCO} = 2.5V	50	–	169	µA
	Pad pull-up (when selected) at V_{IN} = 0V, V_{CCO} = 1.8V	60	–	120	µA
	Pad pull-up (when selected) at V_{IN} = 0V, V_{CCO} = 1.5V	30	–	120	µA
	Pad pull-up (when selected) at V_{IN} = 0V, V_{CCO} = 1.2V	10	–	100	µA
I_{RPD}	Pad pull-down (when selected) at V_{IN} = 3.3V	60	–	200	µA
	Pad pull-down (when selected) at V_{IN} = 1.8V	29	–	120	µA
$I_{CCADCONPL}$	Analog supply current for the PL SYSMON circuits in the power-up state	–	–	8	mA
$I_{CCADCONPS}$	Analog supply current for the PS SYSMON circuits in the power-up state	–	–	10	mA
$I_{CCADCOFFPL}$	Analog supply current for the PL SYSMON circuits in the power-down state	–	–	1.5	mA

Table 4: **DC Characteristics Over Recommended Operating Conditions** *(cont'd)*

Symbol	Description	Min	Typ[1]	Max	Units
$I_{CCADCOFFPS}$	Analog supply current for the PS SYSMON circuits in the power-down state	–	–	1.8	mA
I_{CC_PSBATT}[4, 5]	Battery supply current at V_{CC_PSBATT} = 1.50V, RTC enabled	–	–	3650	nA
	Battery supply current at V_{CC_PSBATT} = 1.50V, RTC disabled	–	–	650	nA
	Battery supply current at V_{CC_PSBATT} = 1.20V, RTC enabled	–	–	3150	nA
	Battery supply current at V_{CC_PSBATT} = 1.20V, RTC disabled	–	–	150	nA
I_{PSFS}[6]	PS V_{CC_PSAUX} additional supply current during eFUSE programming	–	–	115	mA
Calibrated programmable on-die termination (DCI) in HP I/O banks[7] (measured per JEDEC specification)					
R[9]	Thevenin equivalent resistance of programmable input termination to $V_{CCO}/2$ where ODT = RTT_40	–10%[8]	40	+10%[8]	Ω
	Thevenin equivalent resistance of programmable input termination to $V_{CCO}/2$ where ODT = RTT_48	–10%[8]	48	+10%[8]	Ω
	Thevenin equivalent resistance of programmable input termination to $V_{CCO}/2$ where ODT = RTT_60	–10%[8]	60	+10%[8]	Ω
	Programmable input termination to V_{CCO} where ODT = RTT_40	–10%[8]	40	+10%[8]	Ω
	Programmable input termination to V_{CCO} where ODT = RTT_48	–10%[8]	48	+10%[8]	Ω
	Programmable input termination to V_{CCO} where ODT = RTT_60	–10%[8]	60	+10%[8]	Ω
	Programmable input termination to V_{CCO} where ODT = RTT_120	–10%[8]	120	+10%[8]	Ω
	Programmable input termination to $V_{CCO}$where ODT = RTT_240	–10%[8]	240	+10%[8]	Ω
Uncalibrated programmable on-die termination in HP I/Os banks (measured per JEDEC specification)					
R[9]	Thevenin equivalent resistance of programmable input termination to $V_{CCO}/2$ where ODT = RTT_40	–50%	40	+50%	Ω
	Thevenin equivalent resistance of programmable input termination to $V_{CCO}/2$ where ODT = RTT_48	–50%	48	+50%	Ω
	Thevenin equivalent resistance of programmable input termination to $V_{CCO}/2$ where ODT = RTT_60	–50%	60	+50%	Ω
	Programmable input termination to V_{CCO} where ODT = RTT_40	–50%	40	+50%	Ω
	Programmable input termination to V_{CCO} where ODT = RTT_48	–50%	48	+50%	Ω
	Programmable input termination to V_{CCO} where ODT = RTT_60	–50%	60	+50%	Ω
	Programmable input termination to V_{CCO} where ODT = RTT_120	–50%	120	+50%	Ω
	Programmable input termination to V_{CCO} where ODT = RTT_240	–50%	240	+50%	Ω
Uncalibrated programmable on-die termination in HD I/O banks (measured per JEDEC specification)					
R[9]	Thevenin equivalent resistance of programmable input termination to $V_{CCO}/2$ where ODT = RTT_48	–50%	48	+50%	Ω
Internal V_{REF}	50% V_{CCO}	V_{CCO} x 0.49	V_{CCO} x 0.50	V_{CCO} x 0.51	V
	70% V_{CCO}	V_{CCO} x 0.69	V_{CCO} x 0.70	V_{CCO} x 0.71	V
Differential termination	Programmable differential termination (TERM_100) for HP I/O banks	–35%	100	+35%	Ω
n	Temperature diode ideality factor	–	1.026	–	–

Table 4: **DC Characteristics Over Recommended Operating Conditions** *(cont'd)*

Symbol	Description	Min	Typ[1]	Max	Units
r	Temperature diode series resistance	–	2	–	Ω

Notes:

1. Typical values are specified at nominal voltage, 25°C.
2. For the HP I/O banks with a V_{CCO} of 1.8V and separated V_{CCO} and V_{CCAUX_IO} power supplies, the I_L maximum current is 70 µA.
3. This measurement represents the die capacitance at the pad, not including the package.
4. Maximum value specified for worst case process at 25°C.
5. I_{CC_PSBATT} is measured when the battery-backed RAM (BBRAM) is enabled.
6. Do not program eFUSE during device configuration (e.g., during configuration, during configuration readback, or when readback CRC is active).
7. VRP resistor tolerance is (240Ω ±1%).
8. If VRP resides at a different bank (DCI cascade), the range increases to ±15%.
9. On-die input termination resistance, for more information see the *UltraScale Architecture SelectIO Resources User Guide* (UG571).

Table 5: **PS MIO Pull-up and Pull-down Current**

Symbol	Description	Min	Max	Units
I_{RPU}[1]	Pad pull-up (when selected) at V_{IN} = 0V, V_{CCO_PSIO} = 3.3V	20	80	µA
	Pad pull-up (when selected) at V_{IN} = 0V, V_{CCO_PSIO} = 2.5V	20	80	µA
	Pad pull-up (when selected) at V_{IN} = 0V, V_{CCO_PSIO} = 1.8V	15	65	µA
I_{RPD}	Pad pull-down (when selected) at V_{IN} = 3.3V	20	80	µA
	Pad pull-down (when selected) at V_{IN} = 2.5V	20	80	µA
	Pad pull-down (when selected) at V_{IN} = 1.8V	15	65	µA

Notes:

1. After power-on, the reset values of the MIO pin configuration registers enable and select the PS MIO pull-ups.

V_{IN} Maximum Allowed AC Voltage Overshoot and Undershoot

Table 6: **V_{IN} Maximum Allowed AC Voltage Overshoot and Undershoot for HD I/O Banks**

AC Voltage Overshoot[1]	% of UI[2] at –40°C to 100°C[3]	AC Voltage Undershoot[1]	% of UI[2] at –40°C to 100°C[3]
V_{CCO} + 0.30	100%	–0.30	100%
V_{CCO} + 0.35	100%	–0.35	90%
V_{CCO} + 0.40	100%	–0.40	78%
V_{CCO} + 0.45	100%	–0.45	40%
V_{CCO} + 0.50	100%	–0.50	24%
V_{CCO} + 0.55	100%	–0.55	18.0%
V_{CCO} + 0.60	100%	–0.60	13.0%
V_{CCO} + 0.65	100%	–0.65	10.8%
V_{CCO} + 0.70	92%	–0.70	9.0%
V_{CCO} + 0.75	92%	–0.75	7.0%
V_{CCO} + 0.80	92%	–0.80	6.0%
V_{CCO} + 0.85	92%	–0.85	5.0%
V_{CCO} + 0.90	92%	–0.90	4.0%
V_{CCO} + 0.95	92%	–0.95	2.5%

Notes:
1. A total of 200 mA per bank should not be exceeded.
2. For UI smaller than 20 µs.
3. For the -1Q devices, the upper temperature limit is 125°C. For the -1M devices, the temperature limits are –55°C to 125°C.

Table 7: **V_{IN} Maximum Allowed AC Voltage Overshoot and Undershoot for HP I/O Banks**

AC Voltage Overshoot[1]	% of UI[2] at –40°C to 100°C[3]	AC Voltage Undershoot[1]	% of UI[2] at –40°C to 100°C[3]
V_{CCO} + 0.30	100%	–0.30	100%
V_{CCO} + 0.35	100%	–0.35	100%
V_{CCO} + 0.40	92%	–0.40	92%
V_{CCO} + 0.45	50%	–0.45	50%
V_{CCO} + 0.50	20%	–0.50	20%
V_{CCO} + 0.55	10%	–0.55	10%
V_{CCO} + 0.60	6%	–0.60	6%
V_{CCO} + 0.65	2%	–0.65	2%
V_{CCO} + 0.70	2%	–0.70	2%

Notes:
1. A total of 200 mA per bank should not be exceeded.
2. For UI smaller than 20 µs.
3. For the -1Q devices, the upper temperature limit is 125°C. For the -1M devices, the temperature limits are –55°C to 125°C.

Table 8: **V_{PSIN} Maximum Allowed AC Voltage Overshoot and Undershoot for PS I/O Banks**

AC Voltage Overshoot[1]	% of UI[2] at –40°C to 100°C[3]	AC Voltage Undershoot[1]	% of UI[2] at –40°C to 100°C[3]
V_{CCO_PSIO} + 0.30	100%	–0.30	100%
V_{CCO_PSIO} + 0.35	100%	–0.35	75%
V_{CCO_PSIO} + 0.40	100%	–0.40	45%
V_{CCO_PSIO} + 0.45	100%	–0.45	40%
V_{CCO_PSIO} + 0.50	75%	–0.50	10%
V_{CCO_PSIO} + 0.55	75%	–0.55	6%
V_{CCO_PSIO} + 0.60	60%	–0.60	2%
V_{CCO_PSIO} + 0.65	30%	–0.65	0%
V_{CCO_PSIO} + 0.70	20%	–0.70	0%
V_{CCO_PSIO} + 0.75	10%	–0.75	0%
V_{CCO_PSIO} + 0.80	10%	–0.80	0%
V_{CCO_PSIO} + 0.85	8%	–0.85	0%
V_{CCO_PSIO} + 0.90	6%	–0.90	0%
V_{CCO_PSIO} + 0.95	6%	–0.95	0%

Notes:

1. A total of 200 mA per bank should not be exceeded.
2. For UI smaller than 20 µs.
3. For the -1Q devices, the upper temperature limit is 125°C. For the -1M devices, the temperature limits are –55°C to 125°C.

Quiescent Supply Current

Table 9: **Typical Quiescent Supply Current**

Symbol	Description[1, 2, 3, 4]	Device	Speed Grade and V_{CCINT} Operating Voltages					Units
			0.90V	0.85V		0.72V		
			-3	-2	-1	-2	-1	
I_{CCINTQ}	Quiescent V_{CCINT} supply current	XCZU2	N/A	393	393	344	344	mA
		XCZU3	N/A	393	393	344	344	mA
		XCZU4	719	684	684	601	601	mA
		XCZU5	719	684	684	601	601	mA
		XCZU6	1629	1549	1549	1358	1358	mA
		XCZU7	1263	1201	1201	1055	1055	mA
		XCZU9	1629	1549	1549	1358	1358	mA
		XCZU11	1786	1699	1699	1491	1491	mA
		XCZU15	1987	1890	1890	1660	1660	mA
		XCZU17	2728	2594	2594	2275	2275	mA
		XCZU19	2728	2594	2594	2275	2275	mA
		XAZU2	N/A	N/A	393	N/A	344	mA
		XAZU3	N/A	N/A	393	N/A	344	mA
		XAZU4	N/A	N/A	684	N/A	601	mA
		XAZU5	N/A	N/A	684	N/A	601	mA
		XAZU7	N/A	N/A	1201	N/A	N/A	mA
		XAZU11	N/A	N/A	1699	N/A	N/A	mA
		XQZU3	N/A	393	393	N/A	344	mA
		XQZU5	N/A	684	684	N/A	601	mA
		XQZU7	N/A	1201	1201	N/A	1055	mA
		XQZU9	N/A	1549	1549	N/A	1358	mA
		XQZU11	N/A	1699	1699	N/A	1491	mA
		XQZU15	N/A	1890	1890	N/A	1660	mA
		XQZU19	N/A	2594	2594	N/A	2275	mA

Table 9: **Typical Quiescent Supply Current** *(cont'd)*

Symbol	Description[1, 2, 3, 4]	Device	Speed Grade and V_{CCINT} Operating Voltages					Units
			0.90V	0.85V		0.72V		
			-3	-2	-1	-2	-1	
I_{CCINT_IOQ}	Quiescent V_{CCINT_IO} supply current	XCZU2	N/A	44	44	44	44	mA
		XCZU3	N/A	44	44	44	44	mA
		XCZU4	61	59	59	59	59	mA
		XCZU5	61	59	59	59	59	mA
		XCZU6	61	59	59	59	59	mA
		XCZU7	120	115	115	115	115	mA
		XCZU9	61	59	59	59	59	mA
		XCZU11	120	115	115	115	115	mA
		XCZU15	61	59	59	59	59	mA
		XCZU17	164	158	158	158	158	mA
		XCZU19	164	158	158	158	158	mA
		XAZU2	N/A	N/A	44	N/A	44	mA
		XAZU3	N/A	N/A	44	N/A	44	mA
		XAZU4	N/A	N/A	59	N/A	59	mA
		XAZU5	N/A	N/A	59	N/A	59	mA
		XAZU7	N/A	N/A	115	N/A	N/A	mA
		XAZU11	N/A	N/A	115	N/A	N/A	mA
		XQZU3	N/A	44	44	N/A	44	mA
		XQZU5	N/A	59	59	N/A	59	mA
		XQZU7	N/A	115	115	N/A	115	mA
		XQZU9	N/A	59	59	N/A	59	mA
		XQZU11	N/A	115	115	N/A	115	mA
		XQZU15	N/A	59	59	N/A	59	mA
		XQZU19	N/A	158	158	N/A	158	mA
I_{CCOQ}	Quiescent V_{CCO} supply current	All devices	1	1	1	1	1	mA

Table 9: **Typical Quiescent Supply Current** *(cont'd)*

Symbol	Description[1, 2, 3, 4]	Device	Speed Grade and V_{CCINT} Operating Voltages					Units
			0.90V	0.85V		0.72V		
			-3	-2	-1	-2	-1	
I_{CCAUXQ}	Quiescent V_{CCAUX} supply current	XCZU2	N/A	55	55	55	55	mA
		XCZU3	N/A	55	55	55	55	mA
		XCZU4	90	90	90	90	90	mA
		XCZU5	90	90	90	90	90	mA
		XCZU6	227	227	227	227	227	mA
		XCZU7	174	174	174	174	174	mA
		XCZU9	227	227	227	227	227	mA
		XCZU11	255	255	255	255	255	mA
		XCZU15	266	266	266	266	266	mA
		XCZU17	396	396	396	396	396	mA
		XCZU19	396	396	396	396	396	mA
		XAZU2	N/A	N/A	55	N/A	55	mA
		XAZU3	N/A	N/A	55	N/A	55	mA
		XAZU4	N/A	N/A	90	N/A	90	mA
		XAZU5	N/A	N/A	90	N/A	90	mA
		XAZU7	N/A	N/A	174	N/A	N/A	mA
		XAZU11	N/A	N/A	255	N/A	N/A	mA
		XQZU3	N/A	55	55	N/A	55	mA
		XQZU5	N/A	90	90	N/A	90	mA
		XQZU7	N/A	174	174	N/A	174	mA
		XQZU9	N/A	227	227	N/A	227	mA
		XQZU11	N/A	255	255	N/A	255	mA
		XQZU15	N/A	266	266	N/A	266	mA
		XQZU19	N/A	396	396	N/A	396	mA

Table 9: **Typical Quiescent Supply Current** *(cont'd)*

Symbol	Description[1, 2, 3, 4]	Device	Speed Grade and V_{CCINT} Operating Voltages					Units
			0.90V	0.85V		0.72V		
			-3	-2	-1	-2	-1	
I_{CCAUX_IOQ}	Quiescent V_{CCAUX_IO} supply current	XCZU2	N/A	26	26	26	26	mA
		XCZU3	N/A	26	26	26	26	mA
		XCZU4	32	32	32	32	32	mA
		XCZU5	32	32	32	32	32	mA
		XCZU6	33	33	33	33	33	mA
		XCZU7	56	56	56	56	56	mA
		XCZU9	33	33	33	33	33	mA
		XCZU11	56	56	56	56	56	mA
		XCZU15	33	33	33	33	33	mA
		XCZU17	74	74	74	74	74	mA
		XCZU19	74	74	74	74	74	mA
		XAZU2	N/A	N/A	26	N/A	26	mA
		XAZU3	N/A	N/A	26	N/A	26	mA
		XAZU4	N/A	N/A	32	N/A	32	mA
		XAZU5	N/A	N/A	32	N/A	32	mA
		XAZU7	N/A	N/A	56	N/A	N/A	mA
		XAZU11	N/A	N/A	56	N/A	N/A	mA
		XQZU3	N/A	26	26	N/A	26	mA
		XQZU5	N/A	32	32	N/A	32	mA
		XQZU7	N/A	56	56	N/A	56	mA
		XQZU9	N/A	33	33	N/A	33	mA
		XQZU11	N/A	56	56	N/A	56	mA
		XQZU15	N/A	33	33	N/A	33	mA
		XQZU19	N/A	74	74	N/A	74	mA

Table 9: **Typical Quiescent Supply Current** *(cont'd)*

Symbol	Description[1, 2, 3, 4]	Device	Speed Grade and V_{CCINT} Operating Voltages					Units
			0.90V	0.85V		0.72V		
			-3	-2	-1	-2	-1	
$I_{CCBRAMQ}$	Quiescent V_{CCBRAM} supply current	XCZU2	N/A	6	6	6	6	mA
		XCZU3	N/A	6	6	6	6	mA
		XCZU4	9	9	9	9	9	mA
		XCZU5	9	9	9	9	9	mA
		XCZU6	25	24	24	24	24	mA
		XCZU7	16	15	15	15	15	mA
		XCZU9	25	24	24	24	24	mA
		XCZU11	23	22	22	22	22	mA
		XCZU15	29	28	28	28	28	mA
		XCZU17	37	35	35	35	35	mA
		XCZU19	37	35	35	35	35	mA
		XAZU2	N/A	N/A	6	N/A	6	mA
		XAZU3	N/A	N/A	6	N/A	6	mA
		XAZU4	N/A	N/A	9	N/A	9	mA
		XAZU5	N/A	N/A	9	N/A	9	mA
		XAZU7	N/A	N/A	15	N/A	N/A	mA
		XAZU11	N/A	N/A	22	N/A	N/A	mA
		XQZU3	N/A	6	6	N/A	6	mA
		XQZU5	N/A	9	9	N/A	9	mA
		XQZU7	N/A	15	15	N/A	15	mA
		XQZU9	N/A	24	24	N/A	24	mA
		XQZU11	N/A	22	22	N/A	22	mA
		XQZU15	N/A	28	28	N/A	28	mA
		XQZU19	N/A	35	35	N/A	35	mA

Notes:

1. Typical values are specified at nominal voltage, 85°C junction temperatures (T_j) with single-ended SelectIO™ resources.
2. Typical values are for blank configured devices with no output current loads, no active input pull-up resistors, and all I/O pins are 3-state and floating.
3. Use the Xilinx® Power Estimator (XPE) spreadsheet tool (download at www.xilinx.com/power) to estimate static power consumption for conditions or supplies other than those specified.
4. Typical values depend upon your configuration. To accurately estimate all PS supply currents, use the interactive XPE spreadsheet tool.

Power Supply Sequencing

PS Power-On/Off Power Supply Sequencing

The low-power domain (LPD) must operate before the full-power domain (FPD) can function. The low-power and full-power domains can be powered simultaneously. The PS_POR_B input must be asserted to GND during the power-on sequence (see Table 37). The FPD (when used) must be powered before PS_POR_B is released.

To achieve minimum current draw and ensure that the I/Os are 3-stated at power-on, the recommended power-on sequence for the low-power domain (LPD) is listed. The recommended power-off sequence is the reverse of the power-on sequence.

1. $V_{CC_PSINTLP}$
2. V_{CC_PSAUX}, V_{CC_PSADC}, and V_{CC_PSPLL} in any order or simultaneously.
3. V_{CCO_PSIO}

To achieve minimum current draw and ensure that the I/Os are 3-stated at power-on, the recommended power-on sequence for the full-power domain (FPD) is listed. The recommended power-off sequence is the reverse of the power-on sequence.

1. $V_{CC_PSINTFP}$ and $V_{CC_PSINTFP_DDR}$ driven from the same supply source.
2. $V_{PS_MGTRAVCC}$ and $V_{CC_PSDDR_PLL}$ in any order or simultaneously.
3. $V_{PS_MGTRAVTT}$ and V_{CCO_PSDDR} in any order or simultaneously.

PL Power-On/Off Power Supply Sequencing

The recommended power-on sequence is V_{CCINT}, V_{CCINT_IO}/V_{CCBRAM}/V_{CCINT_VCU}, V_{CCAUX}/V_{CCAUX_IO}, and V_{CCO} to achieve minimum current draw and ensure that the I/Os are 3-stated at power-on. The recommended power-off sequence is the reverse of the power-on sequence. If V_{CCINT} and V_{CCINT_IO}/V_{CCBRAM} have the same recommended voltage levels, they can be powered by the same supply and ramped simultaneously. V_{CCINT_IO} must be connected to V_{CCBRAM}. If V_{CCAUX}/V_{CCAUX_IO} and V_{CCO} have the same recommended voltage levels, they can be powered by the same supply and ramped simultaneously. V_{CCAUX} and V_{CCAUX_IO} must be connected together. V_{CCADC} and V_{REF} can be powered at any time and have no power-up sequencing requirements.

The recommended power-on sequence to achieve minimum current draw for the GTH or GTY transceivers is V_{CCINT}, $V_{MGTAVCC}$, $V_{MGTAVTT}$ OR $V_{MGTAVCC}$, V_{CCINT}, $V_{MGTAVTT}$. There is no recommended sequencing for $V_{MGTVCCAUX}$. Both $V_{MGTAVCC}$ and V_{CCINT} can be ramped simultaneously. The recommended power-off sequence is the reverse of the power-on sequence to achieve minimum current draw. If these recommended sequences are not met, current drawn from $V_{MGTAVTT}$ can be higher than specifications during power-up and power-down.

PS-PL Power Sequencing

The PS and PL power supplies are fully independent. All PS power supplies can be powered before or after any PL power supplies. The PS and PL power regions are isolated to prevent damage.

Power Supply Requirements

Table 10 shows the minimum current, in addition to I_{CCQ} maximum, required by each Zynq UltraScale+ MPSoC for proper power-on and configuration. If these current minimums are met, the device powers on after all supplies have passed through their power-on reset threshold voltages. The device must not be configured until after V_{CCINT} is applied. Once initialized and configured, use the Xilinx Power Estimator (XPE) tools to estimate current drain on these supplies. The XPE spreadsheet tool (download at http://www.xilinx.com/power) is also used to estimate power-on current for all supplies.

Table 10: **Power-on Current by Device**

I_{CC} Min =	$I_{CCINTMIN}$	I_{CCINT_IOMIN} + $I_{CCBRAMMIN}$	I_{CCOMIN}	$I_{CCAUXMIN}$ + I_{CCAUX_IOMIN}	Units
I_{CCQ} +	I_{CCINTQ} +	$I_{CCBRAMQ}$ + I_{CCINT_IOQ} +	I_{CCOQ} +	I_{CCAUXQ} + I_{CCAUX_IOQ} +	
XCZU2 XAZU2	464	155	50	111	mA
XCZU3 XAZU3 XQZU3	464	155	50	111	mA
XCZU4 XAZU4	770	257	50	386	mA
XCZU5 XAZU5 XQZU5	770	257	50	386	mA
XCZU6	1800	600	50	650	mA
XCZU7 XAZU7 XQZU7	1514	505	50	362	mA
XCZU9 XQZU9	1800	600	50	650	mA
XCZU11 XAZU11 XQZU11	1961	654	55	709	mA
XCZU15 XQZU15	2242	748	63	810	mA
XCZU17	3433	1145	96	1240	mA
XCZU19 XQZU19	3433	1145	96	1240	mA

Table 11: **Power Supply Ramp Time**

Symbol	Description	Min	Max	Units
T_{VCCINT}	Ramp time from GND to 95% of V_{CCINT}	0.2	40	ms
T_{VCCINT_IO}	Ramp time from GND to 95% of V_{CCINT_IO}	0.2	40	ms
T_{VCCINT_VCU}	Ramp time from GND to 95% of V_{CCINT_VCU}	0.2	40	ms
T_{VCCO}	Ramp time from GND to 95% of V_{CCO}	0.2	40	ms
T_{VCCAUX}	Ramp time from GND to 95% of V_{CCAUX}	0.2	40	ms
$T_{VCCBRAM}$	Ramp time from GND to 95% of V_{CCBRAM}	0.2	40	ms
$T_{MGTAVCC}$	Ramp time from GND to 95% of $V_{MGTAVCC}$	0.2	40	ms
$T_{MGTAVTT}$	Ramp time from GND to 95% of $V_{MGTAVTT}$	0.2	40	ms
$T_{MGTVCCAUX}$	Ramp time from GND to 95% of $V_{MGTVCCAUX}$	0.2	40	ms
$T_{VCC_PSINTFP}$	Ramp time from GND to 95% of $V_{CC_PSINTFP}$	0.2	40	ms
$T_{VCC_PSINTLP}$	Ramp time from GND to 95% of $V_{CC_PSINTLP}$	0.2	40	ms
T_{VCC_PSAUX}	Ramp time from GND to 95% of V_{CC_PSAUX}	0.2	40	ms
$T_{VCC_PSINTFP_DDR}$	Ramp time from GND to 95% of $V_{CC_PSINTFP_DDR}$	0.2	40	ms
T_{VCC_PSADC}	Ramp time from GND to 95% of V_{CC_PSADC}	0.2	40	ms
T_{VCC_PSPLL}	Ramp time from GND to 95% of V_{CC_PSPLL}	0.2	40	ms
$T_{PS_MGTRAVCC}$	Ramp time from GND to 95% of $V_{CC_MGTRAVCC}$	0.2	40	ms
$T_{PS_MGTRAVTT}$	Ramp time from GND to 95% of $V_{CC_MGTRAVTT}$	0.2	40	ms
T_{VCCO_PSDDR}	Ramp time from GND to 95% of V_{CCO_PSDDR}	0.2	40	ms
$T_{VCC_PSDDR_PLL}$	Ramp time from GND to 95% of $V_{CC_PSDDR_PLL}$	0.2	40	ms
T_{VCCO_PSIO}	Ramp time from GND to 95% of V_{CCO_PSIO}	0.2	40	ms

DC Input and Output Levels

Values for V_{IL} and V_{IH} are recommended input voltages. Values for I_{OL} and I_{OH} are guaranteed over the recommended operating conditions at the V_{OL} and V_{OH} test points. Only selected standards are tested. These are chosen to ensure that all standards meet their specifications. The selected standards are tested at a minimum V_{CCO} with the respective V_{OL} and V_{OH} voltage levels shown. Other standards are sample tested.

PS I/O Levels

Table 12: **PS MIO and CONFIG DC Input and Output Levels**

I/O Standard[1]	V_{IL}		V_{IH}		V_{OL}	V_{OH}	I_{OL}	I_{OH}
	V, Min	V, Max	V, Min	V, Max	V, Max	V, Min	mA	mA
LVCMOS33	–0.300	0.800	2.000	V_{CCO_PSIO}	0.40	2.40	12	–12
LVCMOS25	–0.300	0.700	1.700	V_{CCO_PSIO} + 0.30	0.70	1.70	12	–12
LVCMOS18	–0.300	35% V_{CCO_PSIO}	65% V_{CCO_PSIO}	V_{CCO_PSIO} + 0.30	0.45	V_{CCO_PSIO} – 0.45	12	–12

Notes:

1. Tested according to relevant specifications.

Table 13: **PS DDR DC Input and Output Levels**

DDR Standard[1]	V_{IL}		V_{IH}		V_{OL}[2]	V_{OH}[2]	I_{OL}	I_{OH}
	V, Min	V, Max	V, Min	V, Max	V, Max	V, Min	mA	mA
DDR4	0.000	V_{REF} – 0.100	V_{REF} + 0.100	V_{CCO_PSDDR}	0.8 x V_{CCO_PSDDR} – 0.150	0.8 x V_{CCO_PSDDR} + 0.150	10	–0.1
LPDDR4	0.000	V_{REF} – 0.100	V_{REF} + 0.100	V_{CCO_PSDDR}	0.3 x V_{CCO_PSDDR} – 0.150	0.3 x V_{CCO_PSDDR} + 0.150	0.1	–10
DDR3	–0.300	V_{REF} – 0.100	V_{REF} + 0.100	V_{CCO_PSDDR}	0.5 x V_{CCO_PSDDR} – 0.175	0.5 x V_{CCO_PSDDR} + 0.175	8	–8
LPDDR3	0.000	V_{REF} – 0.100	V_{REF} + 0.100	V_{CCO_PSDDR}	0.5 x V_{CCO_PSDDR} – 0.150	0.5 x V_{CCO_PSDDR} + 0.150	8	–8
DDR3L	–0.300	V_{REF} – 0.090	V_{REF} + 0.090	V_{CCO_PSDDR}	0.5 x V_{CCO_PSDDR} – 0.150	0.5 x V_{CCO_PSDDR} + 0.150	8	–8

Notes:
1. Tested according to relevant specifications.
2. DDR4 V_{OL}/V_{OH} specifications are only applicable for DQ/DQS pins.

PL I/O Levels

Table 14: **SelectIO DC Input and Output Levels For HD I/O Banks**

I/O Standard[1, 2]	V_{IL}		V_{IH}		V_{OL}	V_{OH}	I_{OL}	I_{OH}
	V, Min	V, Max	V, Min	V, Max	V, Max	V, Min	mA	mA
HSTL_I	–0.300	V_{REF} – 0.100	V_{REF} + 0.100	V_{CCO} + 0.300	0.400	V_{CCO} – 0.400	8.0	–8.0
HSTL_I_18	–0.300	V_{REF} – 0.100	V_{REF} + 0.100	V_{CCO} + 0.300	0.400	V_{CCO} – 0.400	8.0	–8.0
HSUL_12	–0.300	V_{REF} – 0.130	V_{REF} + 0.130	V_{CCO} + 0.300	20% V_{CCO}	80% V_{CCO}	0.1	–0.1
LVCMOS12	–0.300	35% V_{CCO}	65% V_{CCO}	V_{CCO} + 0.300	0.400	V_{CCO} – 0.400	Note 3	Note 3
LVCMOS15	–0.300	35% V_{CCO}	65% V_{CCO}	V_{CCO} + 0.300	0.450	V_{CCO} – 0.450	Note 4	Note 4
LVCMOS18	–0.300	35% V_{CCO}	65% V_{CCO}	V_{CCO} + 0.300	0.450	V_{CCO} – 0.450	Note 4	Note 4
LVCMOS25	–0.300	0.700	1.700	V_{CCO} + 0.300	0.400	V_{CCO} – 0.400	Note 4	Note 4
LVCMOS33	–0.300	0.800	2.000	3.400	0.400	V_{CCO} – 0.400	Note 4	Note 4
LVTTL	–0.300	0.800	2.000	3.400	0.400	2.400	Note 4	Note 4
SSTL12	–0.300	V_{REF} – 0.100	V_{REF} + 0.100	V_{CCO} + 0.300	$V_{CCO}/2$ – 0.150	$V_{CCO}/2$ + 0.150	14.25	–14.25
SSTL135	–0.300	V_{REF} – 0.090	V_{REF} + 0.090	V_{CCO} + 0.300	$V_{CCO}/2$ – 0.150	$V_{CCO}/2$ + 0.150	8.9	–8.9
SSTL135_II	–0.300	V_{REF} – 0.090	V_{REF} + 0.090	V_{CCO} + 0.300	$V_{CCO}/2$ – 0.150	$V_{CCO}/2$ + 0.150	13.0	–13.0
SSTL15	–0.300	V_{REF} – 0.100	V_{REF} + 0.100	V_{CCO} + 0.300	$V_{CCO}/2$ – 0.175	$V_{CCO}/2$ + 0.175	8.9	–8.9
SSTL15_II	–0.300	V_{REF} – 0.100	V_{REF} + 0.100	V_{CCO} + 0.300	$V_{CCO}/2$ – 0.175	$V_{CCO}/2$ + 0.175	13.0	–13.0
SSTL18_I	–0.300	V_{REF} – 0.125	V_{REF} + 0.125	V_{CCO} + 0.300	$V_{CCO}/2$ – 0.470	$V_{CCO}/2$ + 0.470	8.0	–8.0
SSTL18_II	–0.300	V_{REF} – 0.125	V_{REF} + 0.125	V_{CCO} + 0.300	$V_{CCO}/2$ – 0.600	$V_{CCO}/2$ + 0.600	13.4	–13.4

Notes:
1. Tested according to relevant specifications.
2. Standards specified using the default I/O standard configuration. For details, see the *UltraScale Architecture SelectIO Resources User Guide* (UG571).
3. Supported drive strengths of 4, 8, or 12 mA in HD I/O banks.
4. Supported drive strengths of 4, 8, 12, or 16 mA in HD I/O banks.

Table 15: **SelectIO DC Input and Output Levels for HP I/O Banks**

I/O Standard[1, 2, 3]	V_{IL}		V_{IH}		V_{OL}	V_{OH}	I_{OL}	I_{OH}
	V, Min	V, Max	V, Min	V, Max	V, Max	V, Min	mA	mA
HSTL_I	–0.300	V_{REF} – 0.100	V_{REF} + 0.100	V_{CCO} + 0.300	0.400	V_{CCO} – 0.400	5.8	–5.8
HSTL_I_12	–0.300	V_{REF} – 0.080	V_{REF} + 0.080	V_{CCO} + 0.300	25% V_{CCO}	75% V_{CCO}	4.1	–4.1
HSTL_I_18	–0.300	V_{REF} – 0.100	V_{REF} + 0.100	V_{CCO} + 0.300	0.400	V_{CCO} – 0.400	6.2	–6.2
HSUL_12	–0.300	V_{REF} – 0.130	V_{REF} + 0.130	V_{CCO} + 0.300	20% V_{CCO}	80% V_{CCO}	0.1	–0.1
LVCMOS12	–0.300	35% V_{CCO}	65% V_{CCO}	V_{CCO} + 0.300	0.400	V_{CCO} – 0.400	Note 4	Note 4
LVCMOS15	–0.300	35% V_{CCO}	65% V_{CCO}	V_{CCO} + 0.300	0.450	V_{CCO} – 0.450	Note 5	Note 5
LVCMOS18	–0.300	35% V_{CCO}	65% V_{CCO}	V_{CCO} + 0.300	0.450	V_{CCO} – 0.450	Note 5	Note 5
LVDCI_15	–0.300	35% V_{CCO}	65% V_{CCO}	V_{CCO} + 0.300	0.450	V_{CCO} – 0.450	7.0	–7.0
LVDCI_18	–0.300	35% V_{CCO}	65% V_{CCO}	V_{CCO} + 0.300	0.450	V_{CCO} – 0.450	7.0	–7.0
SSTL12	–0.300	V_{REF} – 0.100	V_{REF} + 0.100	V_{CCO} + 0.300	$V_{CCO}/2$ – 0.150	$V_{CCO}/2$ + 0.150	8.0	–8.0
SSTL135	–0.300	V_{REF} – 0.090	V_{REF} + 0.090	V_{CCO} + 0.300	$V_{CCO}/2$ – 0.150	$V_{CCO}/2$ + 0.150	9.0	–9.0
SSTL15	–0.300	V_{REF} – 0.100	V_{REF} + 0.100	V_{CCO} + 0.300	$V_{CCO}/2$ – 0.175	$V_{CCO}/2$ + 0.175	10.0	–10.0
SSTL18_I	–0.300	V_{REF} – 0.125	V_{REF} + 0.125	V_{CCO} + 0.300	$V_{CCO}/2$ – 0.470	$V_{CCO}/2$ + 0.470	7.0	–7.0
MIPI_DPHY_ DCI_LP[6]	–0.300	0.550	0.880[7]	V_{CCO} + 0.300	0.050	1.100	0.01	–0.01

Notes:

1. Tested according to relevant specifications.
2. Standards specified using the default I/O standard configuration. For details, see the *UltraScale Architecture SelectIO Resources User Guide* (UG571).
3. POD10 and POD12 DC input and output levels are shown in Table 16, Table 21, and Table 22.
4. Supported drive strengths of 2, 4, 6, or 8 mA in HP I/O banks.
5. Supported drive strengths of 2, 4, 6, 8, or 12 mA in HP I/O banks.
6. Low-power option for MIPI_DPHY_DCI.
7. When operating at data rates of 1.5 Gb/s to 2.5 Gb/s, the minimum V_{IH} is 0.790V. These data rates, outlined in Table 72 are supported for XC and XA devices only.

Table 16: **DC Input Levels for Single-ended POD10 and POD12 I/O Standards**

I/O Standard[1, 2]	V_{IL}		V_{IH}	
	V, Min	V, Max	V, Min	V, Max
POD10	–0.300	V_{REF} – 0.068	V_{REF} + 0.068	V_{CCO} + 0.300
POD12	–0.300	V_{REF} – 0.068	V_{REF} + 0.068	V_{CCO} + 0.300

Notes:

1. Tested according to relevant specifications.
2. Standards specified using the default I/O standard configuration. For details, see the *UltraScale Architecture SelectIO Resources User Guide* (UG571).

Table 17: **Differential SelectIO DC Input and Output Levels**

I/O Standard	V_{ICM} (V)[1]			V_{ID} (V)[2]			V_{ILHS}[3]	V_{IHHS}[3]	V_{OCM} (V)[4]			V_{OD} (V)[5]		
	Min	Typ	Max	Min	Typ	Max	Min	Max	Min	Typ	Max	Min	Typ	Max
SUB_LVDS[8]	0.500	0.900	1.300	0.070	–	–	–	–	0.700	0.900	1.100	0.100	0.150	0.200
LVPECL	0.300	1.200	1.425	0.100	0.350	0.600	–	–	–	–	–	–	–	–
SLVS_400_18	0.070	0.200	0.330	0.140	–	0.450	–	–	–	–	–	–	–	–
SLVS_400_25	0.070	0.200	0.330	0.140	–	0.450	–	–	–	–	–	–	–	–
MIPI_DPHY_ DCI_HS[9, 10]	0.070	–	0.330	0.070	–	–	–0.040	0.460	0.150	0.200	0.250	0.140	0.200	0.270

Notes:

1. V_{ICM} is the input common mode voltage.
2. V_{ID} is the input differential voltage ($Q - \overline{Q}$).
3. V_{IHHS} and V_{ILHS} are the single-ended input high and low voltages, respectively.
4. V_{OCM} is the output common mode voltage.
5. V_{OD} is the output differential voltage ($Q - \overline{Q}$).
6. LVDS_25 is specified in Table 23.
7. LVDS is specified in Table 24.
8. Only the SUB_LVDS receiver is supported in HD I/O banks.
9. High-speed option for MIPI_DPHY_DCI. The V_{ID} maximum is aligned with the standard's specification. A higher V_{ID} is acceptable as long as the V_{IN} specification is also met.
10. When operating at data rates of 1.5 Gb/s to 2.5 Gb/s, the minimum V_{ID} is 0.040V. These data rates, outlined in Table 72 are supported for XC and XA devices only.

Table 18: **Complementary Differential SelectIO DC Input and Output Levels for HD I/O Banks**

I/O Standard	V_{ICM} (V)[1]			V_{ID} (V)[2]		V_{OL} (V)[3]	V_{OH} (V)[4]	I_{OL}	I_{OH}
	Min	Typ	Max	Min	Max	Max	Min	mA	mA
DIFF_HSTL_I	0.300	0.750	1.125	0.100	–	0.400	V_{CCO} – 0.400	8.0	–8.0
DIFF_HSTL_I_18	0.300	0.900	1.425	0.100	–	0.400	V_{CCO} – 0.400	8.0	–8.0
DIFF_HSUL_12	0.300	0.600	0.850	0.100	–	20% V_{CCO}	80% V_{CCO}	0.1	–0.1
DIFF_SSTL12	0.300	0.600	0.850	0.100	–	(V_{CCO}/2) – 0.150	(V_{CCO}/2) + 0.150	14.25	–14.25
DIFF_SSTL135	0.300	0.675	1.000	0.100	–	(V_{CCO}/2) – 0.150	(V_{CCO}/2) + 0.150	8.9	–8.9
DIFF_SSTL135_II	0.300	0.675	1.000	0.100	–	(V_{CCO}/2) – 0.150	(V_{CCO}/2) + 0.150	13.0	–13.0
DIFF_SSTL15	0.300	0.750	1.125	0.100	–	(V_{CCO}/2) – 0.175	(V_{CCO}/2) + 0.175	8.9	–8.9
DIFF_SSTL15_II	0.300	0.750	1.125	0.100	–	(V_{CCO}/2) – 0.175	(V_{CCO}/2) + 0.175	13.0	–13.0
DIFF_SSTL18_I	0.300	0.900	1.425	0.100	–	(V_{CCO}/2) – 0.470	(V_{CCO}/2) + 0.470	8.0	–8.0
DIFF_SSTL18_II	0.300	0.900	1.425	0.100	–	(V_{CCO}/2) – 0.600	(V_{CCO}/2) + 0.600	13.4	–13.4

Notes:

1. V_{ICM} is the input common mode voltage.
2. V_{ID} is the input differential voltage.
3. V_{OL} is the single-ended low-output voltage.
4. V_{OH} is the single-ended high-output voltage.

Table 19: **Complementary Differential SelectIO DC Input and Output Levels for HP I/O Banks**

I/O Standard[1]	V_{ICM} (V)[2]			V_{ID} (V)[3]		V_{OL} (V)[4]	V_{OH} (V)[5]	I_{OL}	I_{OH}
	Min	Typ	Max	Min	Max	Max	Min	mA	mA
DIFF_HSTL_I	0.680	$V_{CCO}/2$	$(V_{CCO}/2) + 0.150$	0.100	–	0.400	$V_{CCO} - 0.400$	5.8	–5.8
DIFF_HSTL_I_12	0.400 x V_{CCO}	$V_{CCO}/2$	0.600 x V_{CCO}	0.100	–	0.250 x V_{CCO}	0.750 x V_{CCO}	4.1	–4.1
DIFF_HSTL_I_18	$(V_{CCO}/2) - 0.175$	$V_{CCO}/2$	$(V_{CCO}/2) + 0.175$	0.100	–	0.400	$V_{CCO} - 0.400$	6.2	–6.2
DIFF_HSUL_12	$(V_{CCO}/2) - 0.120$	$V_{CCO}/2$	$(V_{CCO}/2) + 0.120$	0.100	–	20% V_{CCO}	80% V_{CCO}	0.1	–0.1
DIFF_SSTL12	$(V_{CCO}/2) - 0.150$	$V_{CCO}/2$	$(V_{CCO}/2) + 0.150$	0.100	–	$(V_{CCO}/2) - 0.150$	$(V_{CCO}/2) + 0.150$	8.0	–8.0
DIFF_SSTL135	$(V_{CCO}/2) - 0.150$	$V_{CCO}/2$	$(V_{CCO}/2) + 0.150$	0.100	–	$(V_{CCO}/2) - 0.150$	$(V_{CCO}/2) + 0.150$	9.0	–9.0
DIFF_SSTL15	$(V_{CCO}/2) - 0.175$	$V_{CCO}/2$	$(V_{CCO}/2) + 0.175$	0.100	–	$(V_{CCO}/2) - 0.175$	$(V_{CCO}/2) + 0.175$	10.0	–10.0
DIFF_SSTL18_I	$(V_{CCO}/2) - 0.175$	$V_{CCO}/2$	$(V_{CCO}/2) + 0.175$	0.100	–	$(V_{CCO}/2) - 0.470$	$(V_{CCO}/2) + 0.470$	7.0	–7.0

Notes:
1. DIFF_POD10 and DIFF_POD12 HP I/O bank specifications are shown in Table 20, Table 21, Table 22.
2. V_{ICM} is the input common mode voltage.
3. V_{ID} is the input differential voltage.
4. V_{OL} is the single-ended low-output voltage.
5. V_{OH} is the single-ended high-output voltage.

Table 20: **DC Input Levels for Differential POD10 and POD12 I/O Standards**

I/O Standard[1, 2]	V_{ICM} (V)			V_{ID} (V)	
	Min	Typ	Max	Min	Max
DIFF_POD10	0.63	0.70	0.77	0.14	–
DIFF_POD12	0.76	0.84	0.92	0.16	–

Notes:
1. Tested according to relevant specifications.
2. Standards specified using the default I/O standard configuration. For details, see the *UltraScale Architecture SelectIO Resources User Guide* (UG571).

Table 21: **DC Output Levels for Single-ended and Differential POD10 and POD12 Standards**

Symbol	Description[1, 2]	V_{OUT}	Min	Typ	Max	Units
R_{OL}	Pull-down resistance	V_{OM_DC} (as described in Table 22)	36	40	44	Ω
R_{OH}	Pull-up resistance	V_{OM_DC} (as described in Table 22)	36	40	44	Ω

Notes:
1. Tested according to relevant specifications.
2. Standards specified using the default I/O standard configuration. For details, see the *UltraScale Architecture SelectIO Resources User Guide* (UG571).

Table 22: **Definitions for DC Output Levels for Single-ended and Differential POD10 and POD12 Standards**

Symbol	Description	All Speed Grades	Units
V_{OM_DC}	DC output Mid measurement level (for IV curve linearity)	0.8 x V_{CCO}	V

LVDS DC Specifications (LVDS_25)

The LVDS_25 standard is available in the HD I/O banks. See the *UltraScale Architecture SelectIO Resources User Guide* (UG571) for more information.

Table 23: **LVDS_25 DC Specifications**

Symbol	DC Parameter	Min	Typ	Max	Units
V_{CCO}[1]	Supply voltage	2.375	2.500	2.625	V
V_{IDIFF}	Differential input voltage: (Q – $\overline{Q}$), Q = High ($\overline{Q}$ – Q), $\overline{Q}$ = High	100	350	600[2]	mV
V_{ICM}	Input common-mode voltage	0.300	1.200	1.425	V

Notes:

1. LVDS_25 in HD I/O banks supports inputs only. LVDS_25 inputs without internal termination have no V_{CCO} requirements. Any V_{CCO} can be chosen as long as the input voltage levels do not violate the *Recommended Operating Condition* (Table 2) specification for the V_{IN} I/O pin voltage.
2. Maximum V_{IDIFF} value is specified for the maximum V_{ICM} specification. With a lower V_{ICM}, a higher V_{DIFF} is tolerated only when the recommended operating conditions and overshoot/undershoot V_{IN} specifications are maintained.

LVDS DC Specifications (LVDS)

The LVDS standard is available in the HP I/O banks. See the *UltraScale Architecture SelectIO Resources User Guide* (UG571) for more information.

Table 24: **LVDS DC Specifications**

Symbol	DC Parameter	Conditions	Min	Typ	Max	Units
V_{CCO}[1]	Supply voltage		1.710	1.800	1.890	V
V_{ODIFF}[2]	Differential output voltage: (Q – $\overline{Q}$), Q = High ($\overline{Q}$ – Q), $\overline{Q}$ = High	R_T = 100Ω across Q and $\overline{Q}$ signals	247	350	454	mV
V_{OCM}[2]	Output common-mode voltage	R_T = 100Ω across Q and $\overline{Q}$ signals	1.000	1.250	1.425	V
V_{IDIFF}[3]	Differential input voltage: (Q – $\overline{Q}$), Q = High ($\overline{Q}$ – Q), $\overline{Q}$ = High		100	350	600[3]	mV
V_{ICM_DC}[4]	Input common-mode voltage (DC coupling)		0.300	1.200	1.425	V
V_{ICM_AC}[5]	Input common-mode voltage (AC coupling)		0.600	–	1.100	V

Notes:

1. In HP I/O banks, when LVDS is used with input-only functionality, it can be placed in a bank where the V_{CCO} levels are different from the specified level only if internal differential termination is not used. In this scenario, V_{CCO} must be chosen to ensure the input pin voltage levels do not violate the Recommended Operating Condition (Table 2) specification for the V_{IN} I/O pin voltage.
2. V_{OCM} and V_{ODIFF} values are for LVDS_PRE_EMPHASIS = FALSE.
3. Maximum V_{IDIFF} value is specified for the maximum V_{ICM} specification. With a lower V_{ICM}, a higher V_{DIFF} is tolerated only when the recommended operating conditions and overshoot/undershoot V_{IN} specifications are maintained.
4. Input common mode voltage for DC coupled configurations. EQUALIZATION = EQ_NONE (Default).
5. External input common mode voltage specification for AC coupled configurations. EQUALIZATION = EQ_LEVEL0, EQ_LEVEL1, EQ_LEVEL2, EQ_LEVEL3, EQ_LEVEL4.

XCZU5CG-2SFVC784I Xilinx Inc. IC SOC CORTEX-A53 784FCBGA

AC Switching Characteristics

All values represented in this data sheet are based on the speed specifications in the Vivado® Design Suite as outlined in the following table.

Table 25: **Speed Specification Version By Device**

2019.2.2	Device
1.27	XCZU2CG, XCZU2EG, XCZU3CG, XCZU3EG, XCZU4CG, XCZU4EG, XCZU4EV, XCZU5CG, XCZU5EG, XCZU5EV, XCZU6CG, XCZU6EG, XCZU7CG, XCZU7EG, XCZU7EV, XCZU9CG, XCZU9EG, XCZU11EG, XCZU15EG, XCZU17EG, XCZU19EG XQZU3EG, XQZU5EV, XQZU7EV, XQZU9EG, XQZU11EG, XQZU15EG, XQZU19EG XAZU2EG, XAZU3EG, XAZU4EV, XAZU5EV, XAZU7EV, XAZU11EG

Switching characteristics are specified on a per-speed-grade basis and can be designated as Advance, Preliminary, or Production. Each designation is defined as follows:

- **Advance Product Specification:** These specifications are based on simulations only and are typically available soon after device design specifications are frozen. Although speed grades with this designation are considered relatively stable and conservative, some under-reporting might still occur.
- **Preliminary Product Specification:** These specifications are based on complete ES (engineering sample) silicon characterization. Devices and speed grades with this designation are intended to give a better indication of the expected performance of production silicon. The probability of under-reporting delays is greatly reduced as compared to Advance data.
- **Product Specification:** These specifications are released once enough production silicon of a particular device family member has been characterized to provide full correlation between specifications and devices over numerous production lots. There is no under-reporting of delays, and customers receive formal notification of any subsequent changes. Typically, the slowest speed grades transition to production before faster speed grades.

Testing of AC Switching Characteristics

Internal timing parameters are derived from measuring internal test patterns. All AC switching characteristics are representative of worst-case supply voltage and junction temperature conditions.

For more specific, more precise, and worst-case guaranteed data, use the values reported by the static timing analyzer and back-annotate to the simulation net list. Unless otherwise noted, values apply to all Zynq UltraScale+ MPSoCs.

Speed Grade Designations

Because individual family members are produced at different times, the migration from one category to another depends completely on the status of the fabrication process for each device. Table 26 correlates the current status of the Zynq UltraScale+ MPSoC on a per speed grade basis. See Table 3 for operating voltages listed by speed grade.

XCZU5CG-2SFVC784I Xilinx Inc. IC SOC CORTEX-A53 784FCBGA

Table 26: **Speed Grade Designations by Device**

Device	Speed Grade, Temperature Ranges, and V_{CCINT} Operating Voltages[1]		
	Advance	Preliminary	Production
XCZU2CG			-2E (V_{CCINT} = 0.85V), -2I (V_{CCINT} = 0.85V) -1E (V_{CCINT} = 0.85V), -1I (V_{CCINT} = 0.85V) -2LE (V_{CCINT} = 0.85V), -2LE (V_{CCINT} = 0.72V)[1] -1LI (V_{CCINT} = 0.85V), -1LI (V_{CCINT} = 0.72V)[1]
XCZU2EG			-2E (V_{CCINT} = 0.85V), -2I (V_{CCINT} = 0.85V) -1E (V_{CCINT} = 0.85V), -1I (V_{CCINT} = 0.85V) -2LE (V_{CCINT} = 0.85V), -2LE (V_{CCINT} = 0.72V)[1] -1LI (V_{CCINT} = 0.85V), -1LI (V_{CCINT} = 0.72V)[1]
XCZU3CG			-2E (V_{CCINT} = 0.85V), -2I (V_{CCINT} = 0.85V) -1E (V_{CCINT} = 0.85V), -1I (V_{CCINT} = 0.85V) -2LE (V_{CCINT} = 0.85V), -2LE (V_{CCINT} = 0.72V)[1] -1LI (V_{CCINT} = 0.85V), -1LI (V_{CCINT} = 0.72V)[1]
XCZU3EG			-2E (V_{CCINT} = 0.85V), -2I (V_{CCINT} = 0.85V) -1E (V_{CCINT} = 0.85V), -1I (V_{CCINT} = 0.85V) -2LE (V_{CCINT} = 0.85V), -2LE (V_{CCINT} = 0.72V)[1] -1LI (V_{CCINT} = 0.85V), -1LI (V_{CCINT} = 0.72V)[1]
XCZU4CG			-2E (V_{CCINT} = 0.85V), -2I (V_{CCINT} = 0.85V) -1E (V_{CCINT} = 0.85V), -1I (V_{CCINT} = 0.85V) -2LE (V_{CCINT} = 0.85V), -2LE (V_{CCINT} = 0.72V)[1] -1LI (V_{CCINT} = 0.85V), -1LI (V_{CCINT} = 0.72V)[1]
XCZU4EG			-3E (V_{CCINT} = 0.90V) -2E (V_{CCINT} = 0.85V), -2I (V_{CCINT} = 0.85V) -1E (V_{CCINT} = 0.85V), -1I (V_{CCINT} = 0.85V) -2LE (V_{CCINT} = 0.85V), -2LE (V_{CCINT} = 0.72V)[1] -1LI (V_{CCINT} = 0.85V), -1LI (V_{CCINT} = 0.72V)[1]
XCZU4EV			-3E (V_{CCINT} = 0.90V) -2E (V_{CCINT} = 0.85V), -2I (V_{CCINT} = 0.85V) -1E (V_{CCINT} = 0.85V), -1I (V_{CCINT} = 0.85V) -2LE (V_{CCINT} = 0.85V), -2LE (V_{CCINT} = 0.72V)[1] -1LI (V_{CCINT} = 0.85V), -1LI (V_{CCINT} = 0.72V)[1]
XCZU5CG			-2E (V_{CCINT} = 0.85V), -2I (V_{CCINT} = 0.85V) -1E (V_{CCINT} = 0.85V), -1I (V_{CCINT} = 0.85V) -2LE (V_{CCINT} = 0.85V), -2LE (V_{CCINT} = 0.72V)[1] -1LI (V_{CCINT} = 0.85V), -1LI (V_{CCINT} = 0.72V)[1]
XCZU5EG			-3E (V_{CCINT} = 0.90V) -2E (V_{CCINT} = 0.85V), -2I (V_{CCINT} = 0.85V) -1E (V_{CCINT} = 0.85V), -1I (V_{CCINT} = 0.85V) -2LE (V_{CCINT} = 0.85V), -2LE (V_{CCINT} = 0.72V)[1] -1LI (V_{CCINT} = 0.85V), -1LI (V_{CCINT} = 0.72V)[1]
XCZU5EV			-3E (V_{CCINT} = 0.90V) -2E (V_{CCINT} = 0.85V), -2I (V_{CCINT} = 0.85V) -1E (V_{CCINT} = 0.85V), -1I (V_{CCINT} = 0.85V) -2LE (V_{CCINT} = 0.85V), -2LE (V_{CCINT} = 0.72V)[1] -1LI (V_{CCINT} = 0.85V), -1LI (V_{CCINT} = 0.72V)[1]
XCZU6CG			-2E (V_{CCINT} = 0.85V), -2I (V_{CCINT} = 0.85V) -1E (V_{CCINT} = 0.85V), -1I (V_{CCINT} = 0.85V) -2LE (V_{CCINT} = 0.85V), -2LE (V_{CCINT} = 0.72V)[1] -1LI (V_{CCINT} = 0.85V), -1LI (V_{CCINT} = 0.72V)[1]

Table 26: **Speed Grade Designations by Device** *(cont'd)*

Device	Speed Grade, Temperature Ranges, and V_{CCINT} Operating Voltages[1]		
	Advance	Preliminary	Production
XCZU6EG			-3E (V_{CCINT} = 0.90V) -2E (V_{CCINT} = 0.85V), -2I (V_{CCINT} = 0.85V) -1E (V_{CCINT} = 0.85V), -1I (V_{CCINT} = 0.85V) -2LE (V_{CCINT} = 0.85V), -2LE (V_{CCINT} = 0.72V)[1] -1LI (V_{CCINT} = 0.85V), -1LI (V_{CCINT} = 0.72V)[1]
XCZU7CG			-2E (V_{CCINT} = 0.85V), -2I (V_{CCINT} = 0.85V) -1E (V_{CCINT} = 0.85V), -1I (V_{CCINT} = 0.85V) -2LE (V_{CCINT} = 0.85V), -2LE (V_{CCINT} = 0.72V)[1] -1LI (V_{CCINT} = 0.85V), -1LI (V_{CCINT} = 0.72V)[1]
XCZU7EG			-3E (V_{CCINT} = 0.90V) -2E (V_{CCINT} = 0.85V), -2I (V_{CCINT} = 0.85V) -1E (V_{CCINT} = 0.85V), -1I (V_{CCINT} = 0.85V) -2LE (V_{CCINT} = 0.85V), -2LE (V_{CCINT} = 0.72V)[1] -1LI (V_{CCINT} = 0.85V), -1LI (V_{CCINT} = 0.72V)[1]
XCZU7EV			-3E (V_{CCINT} = 0.90V) -2E (V_{CCINT} = 0.85V), -2I (V_{CCINT} = 0.85V) -1E (V_{CCINT} = 0.85V), -1I (V_{CCINT} = 0.85V) -2LE (V_{CCINT} = 0.85V), -2LE (V_{CCINT} = 0.72V)[1] -1LI (V_{CCINT} = 0.85V), -1LI (V_{CCINT} = 0.72V)[1]
XCZU9CG			-2E (V_{CCINT} = 0.85V), -2I (V_{CCINT} = 0.85V) -1E (V_{CCINT} = 0.85V), -1I (V_{CCINT} = 0.85V) -2LE (V_{CCINT} = 0.85V), -2LE (V_{CCINT} = 0.72V)[1] -1LI (V_{CCINT} = 0.85V), -1LI (V_{CCINT} = 0.72V)[1]
XCZU9EG			-3E (V_{CCINT} = 0.90V) -2E (V_{CCINT} = 0.85V), -2I (V_{CCINT} = 0.85V) -1E (V_{CCINT} = 0.85V), -1I (V_{CCINT} = 0.85V) -2LE (V_{CCINT} = 0.85V), -2LE (V_{CCINT} = 0.72V)[1] -1LI (V_{CCINT} = 0.85V), -1LI (V_{CCINT} = 0.72V)[1]
XCZU11EG			-3E (V_{CCINT} = 0.90V) -2E (V_{CCINT} = 0.85V), -2I (V_{CCINT} = 0.85V) -1E (V_{CCINT} = 0.85V), -1I (V_{CCINT} = 0.85V) -2LE (V_{CCINT} = 0.85V), -2LE (V_{CCINT} = 0.72V)[1] -1LI (V_{CCINT} = 0.85V), -1LI (V_{CCINT} = 0.72V)[1]
XCZU15EG			-3E (V_{CCINT} = 0.90V) -2E (V_{CCINT} = 0.85V), -2I (V_{CCINT} = 0.85V) -1E (V_{CCINT} = 0.85V), -1I (V_{CCINT} = 0.85V) -2LE (V_{CCINT} = 0.85V), -2LE (V_{CCINT} = 0.72V)[1] -1LI (V_{CCINT} = 0.85V), -1LI (V_{CCINT} = 0.72V)[1]
XCZU17EG			-3E (V_{CCINT} = 0.90V) -2E (V_{CCINT} = 0.85V), -2I (V_{CCINT} = 0.85V) -1E (V_{CCINT} = 0.85V), -1I (V_{CCINT} = 0.85V) -2LE (V_{CCINT} = 0.85V), -2LE (V_{CCINT} = 0.72V)[1] -1LI (V_{CCINT} = 0.85V), -1LI (V_{CCINT} = 0.72V)[1]
XCZU19EG			-3E (V_{CCINT} = 0.90V) -2E (V_{CCINT} = 0.85V), -2I (V_{CCINT} = 0.85V) -1E (V_{CCINT} = 0.85V), -1I (V_{CCINT} = 0.85V) -2LE (V_{CCINT} = 0.85V), -2LE (V_{CCINT} = 0.72V)[1] -1LI (V_{CCINT} = 0.85V), -1LI (V_{CCINT} = 0.72V)[1]

Table 26: **Speed Grade Designations by Device** *(cont'd)*

Device	Speed Grade, Temperature Ranges, and V_{CCINT} Operating Voltages[1]		
	Advance	Preliminary	Production
XAZU2EG			-1I (V_{CCINT} = 0.85V) -1Q (V_{CCINT} = 0.85V) -1LI (V_{CCINT} = 0.72V)[1]
XAZU3EG			-1I (V_{CCINT} = 0.85V) -1Q (V_{CCINT} = 0.85V) -1LI (V_{CCINT} = 0.72V)[1]
XAZU4EV			-1I (V_{CCINT} = 0.85V) -1Q (V_{CCINT} = 0.85V) -1LI (V_{CCINT} = 0.72V)[1]
XAZU5EV			-1I (V_{CCINT} = 0.85V) -1Q (V_{CCINT} = 0.85V) -1LI (V_{CCINT} = 0.72V)[1]
XAZU7EV	-1I (V_{CCINT} = 0.85V)		-1Q (V_{CCINT} = 0.85V)
XAZU11EG	-1I (V_{CCINT} = 0.85V)		-1Q (V_{CCINT} = 0.85V)
XQZU3EG			-2I (V_{CCINT} = 0.85V) -1I (V_{CCINT} = 0.85V) -1M (V_{CCINT} = 0.85V) -1LI (V_{CCINT} = 0.85V), -1LI (V_{CCINT} = 0.72V)[1]
XQZU5EV			-2I (V_{CCINT} = 0.85V) -1I (V_{CCINT} = 0.85V) -1M (V_{CCINT} = 0.85V) -1LI (V_{CCINT} = 0.85V), -1LI (V_{CCINT} = 0.72V)[1]
XQZU7EV			-2I (V_{CCINT} = 0.85V) -1I (V_{CCINT} = 0.85V) -1M (V_{CCINT} = 0.85V) -1LI (V_{CCINT} = 0.85V), -1LI (V_{CCINT} = 0.72V)[1]
XQZU9EG			-2I (V_{CCINT} = 0.85V) -1I (V_{CCINT} = 0.85V) -1M (V_{CCINT} = 0.85V) -1LI (V_{CCINT} = 0.85V), -1LI (V_{CCINT} = 0.72V)[1]
XQZU11EG			-2I (V_{CCINT} = 0.85V) -1I (V_{CCINT} = 0.85V) -1M (V_{CCINT} = 0.85V) -1LI (V_{CCINT} = 0.85V), -1LI (V_{CCINT} = 0.72V)[1]
XQZU15EG			-2I (V_{CCINT} = 0.85V) -1I (V_{CCINT} = 0.85V) -1M (V_{CCINT} = 0.85V) -1LI (V_{CCINT} = 0.85V), -1LI (V_{CCINT} = 0.72V)[1]
XQZU19EG			-2I (V_{CCINT} = 0.85V) -1I (V_{CCINT} = 0.85V) -1M (V_{CCINT} = 0.85V) -1LI (V_{CCINT} = 0.85V), -1LI (V_{CCINT} = 0.72V)[1]

Notes:

1. The lowest power -1L and -2L devices, where V_{CCINT} = 0.72V, are listed in the Vivado Design Suite as -1LV and -2LV respectively.

Production Silicon and Software Status

In some cases, a particular family member (and speed grade) is released to production before a speed specification is released with the correct label (Advance, Preliminary, Production). Any labeling discrepancies are corrected in subsequent speed specification releases.

Table 27 lists the production released Zynq UltraScale+ MPSoC, speed grade, and the minimum corresponding supported speed specification version and Vivado software revisions. The Vivado software and speed specifications listed are the minimum releases required for production. All subsequent releases of software and speed specifications are valid.

Table 27: **Zynq UltraScale+ MPSoC Device Production Software and Speed Specification Release**

Device	Speed Grade and V_{CCINT} Operating Voltages[1]								
	0.90V	0.85V						0.72V	
	-3	-2	-1	-1Q	-1M	-2L	-1L	-2L	-1L
XCZU2CG	N/A	Vivado tools 2017.1 v1.10		N/A	N/A	Vivado tools 2017.3.1 v1.16			
XCZU2EG	N/A	Vivado tools 2017.1 v1.10		N/A	N/A	Vivado tools 2017.3.1 v1.16			
XCZU3CG	N/A	Vivado tools 2017.1 v1.10		N/A	N/A	Vivado tools 2017.3.1 v1.16			
XCZU3EG	N/A	Vivado tools 2017.1 v1.10		N/A	N/A	Vivado tools 2017.3.1 v1.16			
XCZU4CG	N/A	Vivado tools 2017.4 v1.17		N/A	N/A	Vivado tools 2017.4.1 v1.18			
XCZU4EG	Vivado tools 2018.2.1 v1.21	Vivado tools 2017.4 v1.17		N/A	N/A	Vivado tools 2017.4.1 v1.18			
XCZU4EV	Vivado tools 2018.2.1 v1.21	Vivado tools 2017.4 v1.17		N/A	N/A	Vivado tools 2017.4.1 v1.18			
XCZU5CG	N/A	Vivado tools 2017.4 v1.17		N/A	N/A	Vivado tools 2017.4.1 v1.18			
XCZU5EG	Vivado tools 2018.2.1 v1.21	Vivado tools 2017.4 v1.17		N/A	N/A	Vivado tools 2017.4.1 v1.18			
XCZU5EV	Vivado tools 2018.2.1 v1.21	Vivado tools 2017.4 v1.17		N/A	N/A	Vivado tools 2017.4.1 v1.18			
XCZU6CG	N/A	Vivado tools 2017.1 v1.10		N/A	N/A	Vivado tools 2017.3.1 v1.16			
XCZU6EG	Vivado tools 2018.2.1 v1.21	Vivado tools 2017.1 v1.10		N/A	N/A	Vivado tools 2017.3.1 v1.16			
XCZU7CG	N/A	Vivado tools 2017.4 v1.17		N/A	N/A	Vivado tools 2017.4.1 v1.18			
XCZU7EG	Vivado tools 2018.2.1 v1.21	Vivado tools 2017.4 v1.17		N/A	N/A	Vivado tools 2017.4.1 v1.18			
XCZU7EV	Vivado tools 2018.2.1 v1.21	Vivado tools 2017.4 v1.17		N/A	N/A	Vivado tools 2017.4.1 v1.18			
XCZU9CG	N/A	Vivado tools 2017.1 v1.10		N/A	N/A	Vivado tools 2017.3.1 v1.16			
XCZU9EG	Vivado tools 2018.2.1 v1.21	Vivado tools 2017.1 v1.10		N/A	N/A	Vivado tools 2017.3.1 v1.16			
XCZU11EG	Vivado tools 2018.1 v1.19	Vivado tools 2017.3 v1.15		N/A	N/A	Vivado tools 2017.4.1 v1.18			
XCZU15EG	Vivado tools 2018.1 v1.19	Vivado tools 2017.2 v1.12		N/A	N/A	Vivado tools 2017.3.1 v1.16			
XCZU17EG	Vivado tools 2018.1 v1.19	Vivado tools 2017.2.1 v1.13		N/A	N/A	Vivado tools 2017.4 v1.17			
XCZU19EG	Vivado tools 2018.1 v1.19	Vivado tools 2017.2.1 v1.13		N/A	N/A	Vivado tools 2017.4 v1.17			

Table 27: **Zynq UltraScale+ MPSoC Device Production Software and Speed Specification Release** *(cont'd)*

Device	Speed Grade and V_{CCINT} Operating Voltages[1]								
	0.90V	0.85V						0.72V	
	-3	-2	-1	-1Q	-1M	-2L	-1L	-2L	-1L
XAZU2EG	N/A	N/A	Vivado tools 2017.3 v1.15		N/A	N/A	N/A	N/A	Vivado tools 2017.3.1 v1.16
XAZU3EG	N/A	N/A	Vivado tools 2017.3 v1.15		N/A	N/A	N/A	N/A	Vivado tools 2017.3.1 v1.16
XAZU4EV	N/A	N/A	Vivado tools 2017.4 v1.17	Vivado tools 2018.2 v1.20	N/A	N/A	N/A	N/A	Vivado tools 2017.4.1 v1.18
XAZU5EV	N/A	N/A	Vivado tools 2017.4 v1.17	Vivado tools 2018.2 v1.20	N/A	N/A	N/A	N/A	Vivado tools 2017.4.1 v1.18
XAZU7EV	N/A	N/A		Vivado tools 2019.1.1 v1.26	N/A	N/A	N/A	N/A	N/A
XAZU11EG	N/A	N/A		Vivado tools 2019.1.1 v1.26	N/A	N/A	N/A	N/A	N/A
XQZU3EG	N/A	Vivado tools 2018.3 v1.23		N/A	Vivado tools 2018.3 v1.23	N/A	Vivado tools 2018.3 v1.23	N/A	Vivado tools 2018.3 v1.23
XQZU5EV	N/A	Vivado tools 2018.2.2 v1.22		N/A	Vivado tools 2018.2.2 v1.22	N/A	Vivado tools 2018.2.2 v1.22	N/A	Vivado tools 2018.2.2 v1.22
XQZU7EV	N/A	Vivado tools 2018.2.2 v1.22		N/A	Vivado tools 2018.2.2 v1.22	N/A	Vivado tools 2018.2.2 v1.22	N/A	Vivado tools 2018.2.2 v1.22
XQZU9EG	N/A	Vivado tools 2018.3 v1.23		N/A	Vivado tools 2018.3 v1.23	N/A	Vivado tools 2018.3 v1.23	N/A	Vivado tools 2018.3 v1.23
XQZU11EG	N/A	Vivado tools 2018.3 v1.23		N/A	Vivado tools 2018.3 v1.23	N/A	Vivado tools 2018.3 v1.23	N/A	Vivado tools 2018.3 v1.23
XQZU15EG	N/A	Vivado tools 2018.2.2 v1.22		N/A	Vivado tools 2018.2.2 v1.22	N/A	Vivado tools 2018.2.2 v1.22	N/A	Vivado tools 2018.2.2 v1.22
XQZU19EG	N/A	Vivado tools 2018.3 v1.23		N/A	Vivado tools 2018.3 v1.23	N/A	Vivado tools 2018.3 v1.23	N/A	Vivado tools 2018.3 v1.23

Notes:

1. See Table 3 for the complete list of operating voltages by speed grade.

Processor System (PS) Performance Characteristics

Table 28: **Processor Performance**

Symbol	Description	Speed Grade			Units
		-3	-2	-1	
F_{APUMAX}	Maximum APU clock frequency	1500	1333	1200	MHz
F_{RPUMAX}	Maximum RPU clock frequency	600	533	500	MHz
F_{GPUMAX}	Maximum GPU clock frequency	667	600	600	MHz

Table 29: **Configuration and Security Unit Performance**

Symbol	Description	Speed Grade			Units
		-3	-2	-1	
$F_{CSUCIBMAX}$	Maximum CSU crypto interface block frequency	400	400	400	MHz

Table 30: **PS DDR Performance**

Memory Standard	Package	DRAM Type	Speed Grade				Units
			-3E -2E/-2LE -1E		-2I/-2LI -1I/-1M/-1Q -1LI		
			Min	Max	Min	Max	
DDR4[4]	All FFV and FFR packages, FBVB900, SFVC784, and SFRC784	Single rank component	664	2400	1000	2400	Mb/s
		1 rank DIMM[1, 2]	664	2133	1000	2133	Mb/s
		2 rank DIMM[1, 3]	664	1866	1000	1866	Mb/s
	SFVA625[7]	Single rank component	664	2133	1000	2133	Mb/s
		1 rank DIMM[1, 2]	664	1866	1000	1866	Mb/s
		2 rank DIMM[1, 3]	664	1600	1000	1600	Mb/s
	SBVA484[7]	Single rank component	664	1066	1000	1066	Mb/s
		1 rank DIMM[1, 2]	664	1066	1000	1066	Mb/s
		2 rank DIMM[1, 3]	664	1066	1000	1066	Mb/s
LPDDR4[5]	All FFV and FFR packages, FBVB900, SFVC784, and SFRC784	Single die package[6, 7]	664	2400	1000	2400	Mb/s
		Dual die package[6, 7]	664	2133	1000	2133	Mb/s
	SFVA625	Single die package[6, 7]	664	2133	1000	2133	Mb/s
		Dual die package[6, 7]	664	1866	1000	1866	Mb/s
	SBVA484	Single die package[6, 7]	664	1066	1000	1066	Mb/s
		Dual die package[6, 7]	664	1066	1000	1066	Mb/s
DDR3	All FFV and FFR packages, FBVB900, SFVC784, and SFRC784	Single rank component	664	2133	1000	2133	Mb/s
		1 rank DIMM[1, 2]	664	1866	1000	1866	Mb/s
		2 rank DIMM[1, 3]	664	1600	1000	1600	Mb/s
	SFVA625[7]	Single rank component	664	1866	1000	1866	Mb/s
		1 rank DIMM[1, 2]	664	1600	1000	1600	Mb/s
		2 rank DIMM[1, 3]	664	1333	1000	1333	Mb/s
	SBVA484[7]	Single rank component	664	1066	1000	1066	Mb/s
		1 rank DIMM[1, 2]	664	1066	1000	1066	Mb/s
		2 rank DIMM[1, 3]	664	1066	1000	1066	Mb/s
DDR3L	All FFV and FFR packages, FBVB900, SFVC784, and SFRC784	Single rank component	664	1866	1000	1866	Mb/s
		1 rank DIMM[1, 2]	664	1600	1000	1600	Mb/s
		2 rank DIMM[1, 3]	664	1333	1000	1333	Mb/s
	SFVA625[7]	Single rank component	664	1600	1000	1600	Mb/s
		1 rank DIMM[1, 2]	664	1333	1000	1333	Mb/s
		2 rank DIMM[1, 3]	664	1066	1000	1066	Mb/s
	SBVA484[7]	Single rank component	664	1066	1000	1066	Mb/s
		1 rank DIMM[1, 2]	664	1066	1000	1066	Mb/s
		2 rank DIMM[1, 3]	664	1066	1000	1066	Mb/s

Table 30: **PS DDR Performance** *(cont'd)*

Memory Standard	Package	DRAM Type	Speed Grade				Units
			-3E -2E/-2LE -1E		-2I/-2LI -1I/-1M/-1Q -1LI		
			Min	Max	Min	Max	
LPDDR3	All FFV and FFR packages, FBVB900, SFVC784, and SFRC784	Single die package[8]	664	1600	1000	1600	Mb/s
		Dual die package[8]	664	1333	1000	1333	Mb/s
	SFVA625[7]	Single die package[8]	664	1333	1000	1333	Mb/s
		Dual die package[8]	664	1066	1000	1066	Mb/s
	SBVA484[7]	Single die package[8]	664	1066	1000	1066	Mb/s
		Dual die package[8]	664	1066	1000	1066	Mb/s

Notes:

1. Dual in-line memory module (DIMM) includes RDIMM, SODIMM, and UDIMM.
2. Includes: 1 rank 1 slot, dual-die package 2 rank.
3. Includes: 2 rank 1 slot.
4. The JEDEC JESD79-4B standard for DDR4 SDRAM limits the maximum t_{CK} to 1.6 ns. Because of this limitation, Xilinx recommends working with your DRAM vendor to verify support for data rates at or less than 1066 Mb/s.
5. LPDDR4 support is only available as a 32-bit interface. Byte-mode LPDDR4 devices are not supported.
6. LPDDR4 single die package with ECC is limited to the performance specified for the LPDDR4 dual die package.
7. In SBVA484 and SFVA625 packages, DDR4 support is only available as a 32-bit or 16-bit interface and other memory support is available only as a 32-bit interface.
8. 64-bit LPDDR3 interface performance values are defined without ECC support.

Table 31: **PS NAND NV-DDR Synchronous Performance**

Memory Standard	Mode	Speed Grade			Units
		-3	-2	-1	
		Max	Max	Max	
NV-DDR[1]	5	200	200	200	Mb/s
	4	166.6	166.6	166.6	Mb/s
	3	133.3	133.3	133.3	Mb/s
	2	100	100	100	Mb/s
	1	66.6	66.6	66.6	Mb/s
	0	40	40	40	Mb/s

Notes:

1. The PS NAND memory controller interface for NV-DDR switching characteristics meets the requirements of the ONFI 3.1 specification.

Table 32: **PS NAND SDR Asynchronous Performance**

Memory Standard	Mode	Speed Grade			Units
		-3	-2	-1	
		Max	Max	Max	
SDR[1, 2]	5	50	50	50	Mb/s
	4	40	40	40	Mb/s
	3	33.3	33.3	33.3	Mb/s
	2	28.5	28.5	28.5	Mb/s
	1	20	20	20	Mb/s
	0	10	10	10	Mb/s

Notes:
1. The PS NAND memory controller interface for SDR switching characteristics meets the requirements of the ONFI 3.1 specification.
2. The NAND controller reference clock frequency maximum is 83 MHz.

Table 33: **PS-PL Interface Performance**

Symbol	Description	Min	Max	Units
$F_{EMIOGEMCLK}$	EMIO gigabit Ethernet controller maximum frequency	–	125	MHz
$F_{EMIOSDCLK}$	EMIO SD controller maximum frequency	–	25	MHz
$F_{EMIOSPICLK}$	EMIO SPI controller maximum frequency	–	25	MHz
$F_{EMIOTRACECLK}$	EMIO trace controller maximum frequency	–	125	MHz
$F_{FCIDMACLK}$	Flow control interface DMA maximum frequency	–	333	MHz
F_{AXICLK}	Maximum AXI interface performance	–	333	MHz
$F_{DPLIVEVIDEO}$	DisplayPort controller live video interface maximum frequency	–	300	MHz

PS Switching Characteristics

PS Clocks

Table 34: **PS Reference Clock Requirements**

Symbol	Description[1]	Min	Typ	Max	Units
$T_{RMSJPSCLK}$	PS_REF_CLK input RMS clock jitter	–	–	3	ps
$T_{PJPSCLK}$	PS_REF_CLK input period jitter (peak-to-peak) Number of clock cycles = 10,000	–	–	50	ps
$T_{DCPSCLK}$	PS_REF_CLK duty cycle	45	–	55	%
$T_{RFPSCLK}$	PS_REF_CLK rise time (20%–80%) and fall time (80%–20%)	–	–	2.22	ns
F_{PSCLK}	PS_REF_CLK frequency	27	–	60	MHz

Notes:
1. The values in this table are applicable to alternative PS reference clock inputs ALT_REF_CLK, AUX_REF_CLK, and VIDEO_CLK.

Table 35: **PS RTC Crystal Requirements**

Symbol	Description[1]	Min	Typ	Max	Units
F_{XTAL}	Parallel resonance crystal frequency	–	32.8	–	KHz
T_{FTXTAL}	Frequency tolerance	–20	–	20	ppm
C_{XTAL}	Load capacitance for crystal parallel resonance	–	12.5	–	pF
R_{ESR}	Crystal ESR (16.8 and 19.2 MHz)	–	70	–	KΩ
C_{SHUNT}	Crystal shunt capacitance	–	1.4	–	pF

Notes:

1. See the crystal circuit example in the *Zynq UltraScale+ Device Technical Reference Manual* (UG1085).

Table 36: **PS PLL Switching Characteristics**

Symbol	Description	Speed Grade			Units
		-3	-2	-1	
$T_{LOCKPSPLL}$	PLL maximum lock time	100	100	100	µs
$F_{PSPLLMAX}$	PLL maximum output frequency	1600	1600	1600	MHz
$F_{PSPLLMIN}$	PLL minimum output frequency	750	750	750	MHz
$F_{PSPLLVCOMAX}$	PLL maximum VCO frequency	3000	3000	3000	MHz
$F_{PSPLLVCOMIN}$	PLL minimum VCO frequency	1500	1500	1500	MHz

Table 37: **PS Reset Assertion Timing Requirements**

Symbol	Description	Min	Typ	Max	Units
T_{PSPOR}	Required PS_POR_B assertion time[1]	10	–	–	µs
T_{PSRST}	Required PS_SRST_B assertion time	3	–	–	PS_REF_CLK Clock Cycles

Notes:

1. PS_POR_B must be asserted Low at power-up and continue to be asserted for a duration of T_{PSPOR} after all the PS supply voltages reach minimum levels. PS_POR_B must be asserted Low for the duration of T_{POR} when the PS and PL power-up at the same time and the application uses both the PS and PL after power-up.

Table 38: **PS Clocks Switching Characteristics**

Symbol	Description	Speed Grade			Units
		-3	-2	-1	
$F_{TOPSW_MAINMAX}$	FPD AXI interconnect clock maximum frequency	600	533	533	MHz
$F_{TOPSW_LSBUSMAX}$	FPD APB bus clock maximum frequency	100	100	100	MHz
$F_{GDMAMAX}$	FPD-DMA controller clock maximum frequency	600	600	600	MHz
$F_{DPDMAMAX}$	DisplayPort controller clock maximum frequency	600	600	600	MHz
$F_{LPD_SWITCH_CTRLMAX}$	LPD AXI interconnect clock maximum frequency	600	500	500	MHz
$F_{LPD_LSBUS_CTRLMAX}$	LPD APB bus clock maximum frequency	100	100	100	MHz
$F_{ADMAMAX}$	LPD-DMA maximum frequency	600	500	500	MHz
$F_{APLL_TO_LPDMAX}$	APLL_TO_LPD maximum frequency	533	533	533	MHz
$F_{DPLL_TO_LPDMAX}$	DPLL_TO_LPD maximum frequency	533	533	533	MHz
$F_{VPLL_TO_LPDMAX}$	VPLL_TO_LPD maximum frequency	533	533	533	MHz
$F_{IOPLL_TO_FPDMAX}$	IOPLL_TO_FPD maximum frequency	533	533	533	MHz
$F_{RPLL_TO_FPDMAX}$	RPLL_TO_FPD maximum frequency	533	533	533	MHz

PS Configuration

Table 39: **Processor Configuration Access Port Switching Characteristics**

Symbol	Description	Speed Grade and V_{CCINT} Operating Voltages					Units
		0.90V	0.85V		0.72V		
		-3	-2	-1	-2	-1	
F_{PCAPCK}	Maximum processor configuration access port (PCAP) frequency	200	200	200	150	150	MHz

Table 40: **Boundary-Scan Port Switching Characteristics**

Symbol	Description	Speed Grade and V_{CCINT} Operating Voltages					Units
		0.90V	0.85V		0.72V		
		-3	-2	-1	-2	-1	
F_{TCK}	JTAG clock maximum frequency	25	25	25	15	15	MHz
T_{TAPTCK}/T_{TCKTAP}	TMS and TDI setup and hold	4.0/2.0	4.0/2.0	4.0/2.0	5.0/2.0	5.0/2.0	ns, Min
T_{TCKTDO}	TCK falling edge to TDO output	16.1	16.1	16.1	24	24	ns, Max

Notes:

1. The test conditions are configured to the LVCMOS 3.3V I/O standard with a 12 mA drive strength.

PS Interface Specifications

PS Quad-SPI Controller Interface

Table 41: **Generic Quad-SPI Interface**

Symbol	Description[1]	Load Conditions[2]	Min	Max	Units
Quad-SPI device clock frequency operating at 150 MHz. Loopback enabled. LVCMOS 1.8V or LVCMOS 3.3V I/O standard.					
$T_{DCQSPICLK1}$	Quad-SPI clock duty cycle	15 pF	45	55	%
$T_{QSPISSSCLK1}$	Slave select asserted to next clock edge	15 pF	5.0	–	ns
$T_{QSPISCLKSS1}$	Clock edge to slave select deasserted	15 pF	5.0	–	ns
$T_{QSPICKO1}$	Clock to output delay, all outputs	15 pF	2.9	4.5	ns
$T_{QSPIDCK1}$	Setup time, all inputs	15 pF	0.9	–	ns
$T_{QSPICKD1}$	Hold time, all inputs	15 pF	1.0	–	ns
$F_{QSPICLK1}$	Quad-SPI device clock frequency	15 pF	–	150	MHz
$F_{QSPIREFCLK1}$	Quad-SPI reference clock frequency	15 pF	–	300	MHz
Quad-SPI device clock frequency operating at 100 MHz. Loopback enabled. LVCMOS 1.8V or LVCMOS 3.3V I/O standard.					
$T_{DCQSPICLK2}$	Quad-SPI clock duty cycle	15 pF	45	55	%
		30 pF	45	55	%
$T_{QSPISSSCLK2}$	Slave select asserted to next clock edge	15 pF	5.0	–	ns
		30 pF	5.0	–	ns
$T_{QSPISCLKSS2}$	Clock edge to slave select deasserted	15 pF	5.0	–	ns
		30 pF	5.0	–	ns
$T_{QSPICKO2}$	Clock to output delay, all outputs	15 pF	3.2	7.4	ns
		30 pF	3.2	7.4	ns
$T_{QSPIDCK2}$	Setup time, all inputs	15 pF	2.3	–	ns
		30 pF	2.3	–	ns
$T_{QSPICKD2}$	Hold time, all inputs	15 pF	0.0	–	ns
		30 pF	0.0	–	ns
$F_{QSPICLK2}$	Quad-SPI device clock frequency	15 pF	–	100	MHz
		30 pF	–	100	MHz
$F_{QSPIREFCLK2}$	Quad-SPI reference clock frequency	15 pF	–	200	MHz
		30 pF	–	200	MHz
Quad-SPI device clock frequency operating at 40 MHz. Loopback disabled. LVCMOS 1.8V I/O standard.					
$T_{DCQSPICLK3}$	Quad-SPI clock duty cycle	15 pF	45	55	%
		30 pF	45	55	%
$T_{QSPISSSCLK3}$	Slave select asserted to next clock edge[3]	15 pF	7.0	–	ns
		30 pF	7.0	–	ns
$T_{QSPISCLKSS3}$	Clock edge to slave select deasserted	15 pF	7.0	–	ns
		30 pF	7.0	–	ns
$T_{QSPICKO3}$	Clock to output delay, all outputs	15 pF	5.2	14.8	ns
		30 pF	5.2	14.8	ns
$T_{QSPIDCK3}$	Setup time, all inputs	15 pF	13.4	–	ns
		30 pF	14.1	–	ns

Table 41: **Generic Quad-SPI Interface** *(cont'd)*

Symbol	Description[1]	Load Conditions[2]	Min	Max	Units
$T_{QSPICKD3}$	Hold time, all inputs	15 pF	0.0	–	ns
		30 pF	0.0	–	ns
$F_{QSPIREFCLK3}$	Quad-SPI reference clock frequency	15 pF	–	160	MHz
		30 pF	–	160	MHz
$F_{QSPICLK3}$	Quad-SPI clock frequency	15 pF	–	40	MHz
		30 pF	–	40	MHz
Quad-SPI device clock frequency operating at 40 MHz. Loopback disabled. LVCMOS 3.3V I/O standard.					
$T_{DCQSPICLK4}$	Quad-SPI clock duty cycle	15 pF	45	55	%
		30 pF	45	55	%
$T_{QSPISSSCLK4}$	Slave select asserted to next clock edge[3]	15 pF	7.0	–	ns
		30 pF	7.0	–	ns
$T_{QSPISCLKSS4}$	Clock edge to slave select deasserted	15 pF	7.0	–	ns
		30 pF	7.0	–	ns
$T_{QSPICKO4}$	Clock to output delay, all outputs	15 pF	5.2	14.8	ns
		30 pF	5.2	14.8	ns
$T_{QSPIDCK4}$	Setup time, all inputs	15 pF	13.9	–	ns
		30 pF	14.9	–	ns
$T_{QSPICKD4}$	Hold time, all inputs	15 pF	0.0	–	ns
		30 pF	0.0	–	ns
$F_{QSPIREFCLK4}$	Quad-SPI reference clock frequency	15 pF	–	160	MHz
		30 pF	–	160	MHz
$F_{QSPICLK4}$	Quad-SPI clock frequency	15 pF	–	40	MHz
		30 pF	–	40	MHz

Notes:

1. The test conditions are configured for the generic Quad-SPI interface at 150/100 MHz with a 12 mA drive strength and fast slew rate.
2. 30 pF loads are for dual-parallel stacked or stacked modes.
3. $T_{QSPISSSCLK3}$ and $T_{QSPISSSCLK4}$ are only valid when two reference clock cycles are programmed between the chip select and clock.

Table 42: **Linear Quad-SPI Interface**

Symbol	Description[1]	Load Conditions[2]	Min	Max	Units
Quad-SPI device clock frequency operating at 100 MHz. Loopback enabled. LVCMOS 1.8V or LVCMOS 3.3V I/O standard.					
$T_{DCQSPICLK5}$	Quad-SPI clock duty cycle	15 pF	45	55	%
		30 pF	45	55	%
$T_{QSPISSSCLK5}$	Slave select asserted to next clock edge[3]	15 pF	5.0	–	ns
		30 pF	5.0	–	ns
$T_{QSPISCLKSS5}$	Clock edge to slave select deasserted	15 pF	5.0	–	ns
		30 pF	5.0	–	ns
$T_{QSPICKO5}$	Clock to output delay, all outputs	15 pF	3.2	7.4	ns
		30 pF	3.2	7.4	ns
$T_{QSPIDCK5}$	Setup time, all inputs	15 pF	2.4	–	ns
		30 pF	2.4	–	ns

Table 42: **Linear Quad-SPI Interface** *(cont'd)*

Symbol	Description[1]	Load Conditions[2]	Min	Max	Units
$T_{QSPICKD5}$	Hold time, all inputs	15 pF	0.0	–	ns
		30 pF	0.0	–	ns
$F_{QSPIREFCLK5}$	Quad-SPI reference clock frequency	15 pF	–	200	MHz
		30 pF	–	200	MHz
$F_{QSPICLK5}$	Quad-SPI device clock frequency	15 pF	–	100	MHz
		30 pF	–	100	MHz
Quad-SPI device clock frequency operating at 40 MHz. Loopback disabled. LVCMOS 1.8V I/O standard.					
$T_{DCQSPICLK6}$	Quad-SPI clock duty cycle	15 pF	45	55	%
		30 pF	45	55	%
$T_{QSPISSSCLK6}$	Slave select asserted to next clock edge	15 pF	7.0	–	ns
		30 pF	7.0	–	ns
$T_{QSPISCLKSS6}$	Clock edge to slave select deasserted	15 pF	7.0	–	ns
		30 pF	7.0	–	ns
$T_{QSPICKO6}$	Clock to output delay, all outputs	15 pF	5.2	14.8	ns
		30 pF	5.2	14.8	ns
$T_{QSPIDCK6}$	Setup time, all inputs	15 pF	13.4	–	ns
		30 pF	13.4	–	ns
$T_{QSPICKD6}$	Hold time, all inputs	15 pF	0.0	–	ns
		30 pF	0.0	–	ns
$F_{QSPIREFCLK6}$	Quad-SPI reference clock frequency	15 pF	–	160	MHz
		30 pF	–	160	MHz
$F_{QSPICLK6}$	Quad-SPI device clock frequency	15 pF	–	40	MHz
		30 pF	–	40	MHz
Quad-SPI device clock frequency operating at 40 MHz. Loopback disabled. LVCMOS 3.3V I/O standard.					
$T_{DCQSPICLK7}$	Quad-SPI clock duty cycle	15 pF	45	55	%
		30 pF	45	55	%
$T_{QSPISSSCLK7}$	Slave select asserted to next clock edge	15 pF	7.0	–	ns
		30 pF	7.0	–	ns
$T_{QSPISCLKSS7}$	Clock edge to slave select deasserted	15 pF	7.0	–	ns
		30 pF	7.0	–	ns
$T_{QSPICKO7}$	Clock to output delay, all outputs	15 pF	5.2	14.8	ns
		30 pF	5.2	14.8	ns
$T_{QSPIDCK7}$	Setup time, all inputs	15 pF	14.0	–	ns
		30 pF	14.0	–	ns
$T_{QSPICKD7}$	Hold time, all inputs	15 pF	0.0	–	ns
		30 pF	0.0	–	ns
$F_{QSPIREFCLK7}$	Quad-SPI reference clock frequency	15 pF	–	160	MHz
		30 pF	–	160	MHz

Table 42: **Linear Quad-SPI Interface** *(cont'd)*

Symbol	Description[1]	Load Conditions[2]	Min	Max	Units
$F_{QSPICLK7}$	Quad-SPI device clock frequency	15 pF	–	40	MHz
		30 pF	–	40	MHz

Notes:
1. The test conditions are configured for the linear Quad-SPI interface at 100 MHz with a 12 mA drive strength and fast slew rate.
2. 30 pF loads are for stacked modes.
3. $T_{QSPISSSCLK5}$ is only valid when two reference clock cycles are programmed between chip select and clock.

PS USB Interface

Table 43: **ULPI Interface**

Symbol	Description[1]	Min	Max	Units
$T_{ULPIDCK}$	Input setup to ULPI clock, all inputs	4.5	–	ns
$T_{ULPICKD}$	Input hold to ULPI clock, all inputs	0	–	ns
$T_{ULPICKO}$	ULPI clock to output valid, all outputs	2.0	8.86	ns
$F_{ULPICLK}$	ULPI reference clock frequency	–	60	MHz

Notes:
1. The test conditions are configured to the LVCMOS 3.3V I/O standard with a 12 mA drive strength, fast slew rate, and a 15 pF load.

PS Gigabit Ethernet Controller Interface

Table 44: **RGMII Interface**

Symbol	Description[1]	Min	Max	Units
$T_{DCGEMTXCLK}$	Transmit clock duty cycle	45	55	%
$T_{GEMTXCKO}$	TXD output clock to out time	–0.5	0.5	ns
$T_{GEMRXDCK}$	RXD input setup time	0.8	–	ns
$T_{GEMRXCKD}$	RXD input hold time	0.8	–	ns
$T_{MDIOCLK}$	MDC output clock period	400	–	ns
$T_{MDIOCKL}$	MDC low time	160	–	ns
$T_{MDIOCKH}$	MDC high time	160	–	ns
$T_{MDIODCK}$	MDIO input data setup time	80	–	ns
$T_{MDIOCKD}$	MDIO input data hold time	0.0	–	ns
$T_{MDIOCKO}$	MDIO output data delay time	–1.0	15	ns
$F_{GETXCLK}$	RGMII_TX_CLK transmit clock frequency	–	125	MHz
$F_{GERXCLK}$	RGMII_RX_CLK receive clock frequency	–	125	MHz
$F_{ENET_REF_CLK}$	Ethernet reference clock frequency	–	125	MHz

Notes:
1. The test conditions are configured to the LVCMOS 2.5V I/O standard with a 12 mA drive strength, fast slew rate, and a 15 pF load.

PS SD/SDIO Controller Interface

Table 45: **SD/SDIO Interface**

Symbol	Description[1]	Min	Max	Units
SD/SDIO Interface DDR50 Mode				
$T_{DCDDRCLK}$	SD device clock duty cycle	45	55	%
$T_{SDDDRCKO1}$	Clock to output delay, data[2]	1.0	6.8	ns
$T_{SDDDRIVW}$	Input valid data window[3]	3.5	–	ns
$T_{SDDDRDCK2}$	Input setup time, command	4.7	–	ns
$T_{SDDDRCKD2}$	Input hold time, command	1.5	–	ns
$T_{SDDDRCKO2}$	Clock to output delay, command	1.0	13.8	ns
$F_{SDDDRCLK}$	High-speed mode SD device clock frequency	–	50	MHz
SD/SDIO Interface SDR104				
$T_{DCSDHSCLK1}$	SD device clock duty cycle	40	60	%
$T_{SDSDRCKO1}$	Clock to output delay, all output[2]	1.0	3.2	ns
$T_{SDSDR1IVW}$	Input valid data window[3]	0.5	–	UI
$F_{SDSDRCLK1}$	SDR104 mode device clock frequency	–	200	MHz
SD/SDIO Interface SDR50/25				
$T_{DCSDHSCLK2}$	SD device clock duty cycle	40	60	%
$T_{SDSDRCKO2}$	Clock to output delay, all outputs[2]	1.0	6.8	ns
$T_{SDSDR2IVW}$	Input valid data window[3]	0.3	–	UI
$F_{SDSDRCLK2}$	SDR50 mode device clock frequency	–	100	MHz
	SDR25 mode device clock frequency	–	50	MHz
SD/SDIO Interface SDR12				
$T_{DCSDHSCLK3}$	SD device clock duty cycle	40	60	%
$T_{SDSDRCKO3}$	Clock to output delay, all outputs	1.0	36.8	ns
$T_{SDSDRDCK3}$	Input setup time, all inputs	10.0	–	ns
$T_{SDSDRCKD3}$	Input hold time, all inputs	1.5	–	ns
$F_{SDSDRCLK3}$	SDR12 mode device clock frequency	–	25	MHz
SD/SDIO Interface High-Speed Mode				
$T_{DCSDHSCLK}$	SD device clock duty cycle	47	53	%
$T_{SDHSCKO}$	Clock to output delay, all outputs[2]	2.2	13.8	ns
$T_{SDHSDIVW}$	Input valid data window[3]	0.35	–	UI
$F_{SDHSCLK}$	High-speed mode SD device clock frequency	–	50	MHz
SD/SDIO Interface Standard Mode				
$T_{DCSDSCLK}$	SD device clock duty cycle	45	55	%
T_{SDSCKO}	Clock to output delay, all outputs	–2.0	4.5	ns
T_{SDSDCK}	Input setup time, all inputs	2.0	–	ns
T_{SDSCKD}	Input hold time, all inputs	2.0	–	ns
$F_{SDIDCLK}$	Clock frequency in identification mode	–	400	KHz

Table 45: **SD/SDIO Interface** *(cont'd)*

Symbol	Description[1]	Min	Max	Units
F_{SDSCLK}	Standard SD device clock frequency	–	19	MHz

Notes:

1. The test conditions SD/SDIO standard mode (default speed mode) use an 8 mA drive strength, fast slew rate, and a 30 pF load. For SD/SDIO high-speed mode, the test conditions use a 12 mA drive strength, fast slew rate, and a 30 pF load. For other SD/SDIO modes, the test conditions use a 12 mA drive strength, fast slew rate, and a 15 pF load.
2. This specification is achieved using pre-determined DLL tuning.
3. This specification is required for capturing input data using DLL tuning.

PS eMMC Standard Interface

Table 46: **eMMC Standard Interface**

Symbol	Description[1]	Min	Max	Units
eMMC Standard Interface				
$T_{DCEMMCHSCLK}$	eMMC clock duty cycle	45	55	%
$T_{EMMCHSCKO}$	Clock to output delay, all outputs	–2.0	4.5	ns
$T_{EMMCHSDCK}$	Input setup time, all inputs	2.0	–	ns
$T_{EMMCHSCKD}$	Input hold time, all inputs	2.0	–	ns
$F_{EMMCHSCLK}$	eMMC clock frequency	–	25	MHz
eMMC High-Speed SDR Interface				
$T_{DCEMMCHSCLK}$	eMMC high-speed SDR clock duty cycle	45	55	%
$T_{EMMCHSCKO}$	Clock to output delay, all outputs[2]	3.2	16.8	ns
$T_{EMMCHSDIVW}$	Input valid data window[3]	0.4	–	UI
$F_{EMMCHSCLK}$	eMMC high speed SDR clock frequency	–	50	MHz
eMMC High-Speed DDR Interface				
$T_{DCEMMCDDRCLK}$	eMMC high-speed DDR clock duty cycle	45	55	%
$T_{EMMCDDRSCKO1}$	Data clock to output delay[2]	2.7	7.3	ns
$T_{EMMCDDRIVW}$	Input valid data window[3]	3.5	–	ns
$T_{EMMCDDRSCKO2}$	Command clock to output delay	3.2	16	ns
$T_{EMMCDDRDCK2}$	Command input setup time	3.9	–	ns
$T_{EMMCDDRCKD2}$	Command input hold time	2.5	–	ns
$F_{EMMCDDRCLK}$	eMMC high-speed DDR clock frequency	–	50	MHz
eMMC HS200 Interface				
$T_{DCEMMCHS200CLK}$	eMMC HS200 clock duty cycle	40	60	%
$T_{EMMCHS200CKO}$	Clock to output delay, all outputs[2]	1.0	3.4	ns
$T_{EMMCSDR1IVW}$	Input valid data window[3]	0.4	–	UI
$F_{EMMCHS200CLK}$	eMMC HS200 clock frequency	–	200	MHz

Notes:

1. The test conditions for eMMC standard mode use an 8 mA drive strength, fast slew rate, and a 30 pF load. For eMMC high-speed mode, the test conditions use a 12 mA drive strength, fast slew rate, and a 30 pF load. For other eMMC modes, the test conditions use a 12 mA drive strength, fast slew rate, and a 15 pF load.
2. This specification is achieved using pre-determined DLL tuning.
3. This specification is required for capturing input data using DLL tuning.

PS I2C Controller Interface

Table 47: **I2C Interface**

Symbol	Description[1]	Min	Max	Units
I2C Fast-mode Interface				
$T_{I2CFCKL}$	SCL Low time	1.3	–	µs
$T_{I2CFCKH}$	SCL High time	0.6	–	µs
$T_{I2CFCKO}$	SDA clock to out delay	–	900	ns
$T_{I2CFDCK}$	SDA input setup time	100	–	ns
$F_{I2CFCLK}$	SCL clock frequency	–	400	KHz
I2C Standard-mode Interface				
$T_{I2CSCKL}$	SCL Low time	4.7	–	µs
$T_{I2CSCKH}$	SCL High time	4.0	–	µs
$T_{I2CSCKO}$	SDA clock to out delay	–	3450	ns
$T_{I2CSDCK}$	SDA input setup time	250	–	ns
$F_{I2CSCLK}$	SCL clock frequency	–	100	KHz

Notes:

1. The test conditions are configured to the LVCMOS 3.3V I/O standard with a 12 mA drive strength, fast slew rate, and a 15 pF load.

PS SPI Controller Interface

Table 48: **SPI Interfaces**

Symbol	Description[1]	Min	Max	Units
SPI Master Interface				
$T_{DCMSPICLK}$	SPI master mode clock duty cycle	45	55	%
$T_{MSPISSSCLK}$	Slave select asserted to first active clock edge	1[2]	–	$F_{SPI_REF_CLK}$ cycles
$T_{MSPISCLKSS}$	Last active clock edge to slave select deasserted	1[2]	–	$F_{SPI_REF_CLK}$ cycles
$T_{MSPIDCK}$	Input setup time for MISO	–2.0	–	ns
$T_{MSPICKD}$	Input hold time for MISO	0.3	–	$F_{MSPICLK}$ cycles
$T_{MSPICKO}$	MOSI and slave select clock to out delay	–2.0	5.0	ns
$F_{MSPICLK}$	SPI master device clock frequency	–	50	MHz
$F_{SPI_REF_CLK}$	SPI reference clock frequency	–	200	MHz
SPI Slave Interface				
$T_{SSPISSSCLK}$	Slave select asserted to first active clock edge	2	–	$F_{SPI_REF_CLK}$ cycles
$T_{SSPISCLKSS}$	Last active clock edge to slave select deasserted	2	–	$F_{SPI_REF_CLK}$ cycles
$T_{SSPIDCK}$	Input setup time for MOSI	5.0	–	ns
$T_{SSPICKD}$	Input hold time for MOSI	1	–	$F_{SPI_REF_CLK}$ cycles
$T_{SSPICKO}$	MISO clock to out delay	0.0	13.0	ns
$F_{SSPICLK}$	SPI slave mode device clock frequency	–	25	MHz

Table 48: **SPI Interfaces** *(cont'd)*

Symbol	Description[1]	Min	Max	Units
$F_{SPI_REF_CLK}$	SPI reference clock frequency	–	200	MHz

Notes:
1. The test conditions are configured to the LVCMOS 3.3V I/O standard with a 12 mA drive strength, fast slew rate, and a 30 pF load.
2. Valid when two SPI_REF_CLK delays are programmed between CS and CLK for $T_{MSPISSSCLK}$, and between CLK and CS for $T_{MSPISCLKSS}$ in the SPI delay_reg0 register.

PS CAN Controller Interface

Table 49: **CAN Interface**

Symbol	Description[1]	Min	Max	Units
$T_{PWCANRX}$	Receive pulse width	1.0	–	µs
$T_{PWCANTX}$	Transmit pulse width	1.0	–	µs
$F_{CAN_REF_CLK}$	Internally sourced CAN reference clock frequency	–	100	MHz
	Externally sourced CAN reference clock frequency	–	40	MHz

Notes:
1. The test conditions are configured to the LVCMOS 3.3V I/O standard with a 12 mA drive strength, fast slew rate, and a 15 pF load.

PS DAP Interface

Table 50: **DAP Interface**

Symbol	Description[1, 2]	Min	Max	Units
$T_{PDAPDCK}$	PS DAP input setup time	3.0	–	ns
$T_{PDAPCKD}$	PS DAP input hold time	2.0	–	ns
$T_{PDAPCKO}$	PS DAP clock to out delay	–	10.86	ns
$F_{PDAPCLK}$	PS DAP clock frequency	–	44	MHz

Notes:
1. The test conditions are configured to the LVCMOS 3.3V I/O standard with a 12 mA drive strength, fast slew rate, and a 15 pF load.
2. PS DAP interface signals connect to MIO pins.

PS UART Interface

Table 51: **UART Interface**

Symbol	Description[1]	Min	Max	Units
$BAUD_{TXMAX}$	Transmit baud rate	–	6.25	Mb/s
$BAUD_{RXMAX}$	Receive baud rate	–	6.25	Mb/s
$F_{UART_REF_CLK}$	UART reference clock frequency	–	100	MHz

Notes:
1. The test conditions are configured to the LVCMOS 3.3V I/O standard with a 12 mA drive strength, fast slew rate, and a 15 pF load.

PS General Purpose I/O Interface

Table 52: **General Purpose I/O (GPIO) Interface**

Symbol	Description	Min	Max	Units
$T_{PWGPIOH}$	Input High pulse width	10 x $1/F_{LPD_LSBUS_CTRLMAX}$	–	µs
$T_{PWGPIOL}$	Input Low pulse width	10 x $1/F_{LPD_LSBUS_CTRLMAX}$	–	µs

PS Trace Interface

Table 53: **Trace Interface**

Symbol	Description[1]	Min	Max	Units
T_{TCECKO}	Trace clock to output delay, all outputs	–0.5	0.5	ns
$T_{DCTCECLK}$	Trace clock duty cycle	45	55	%
F_{TCECLK}	Trace clock frequency	–	125	MHz

Notes:

1. The test conditions are configured to the LVCMOS 3.3V I/O standard with a 12 mA drive strength, fast slew rate, and a 15 pF load.

PS Triple-timer Counter Interface

Table 54: **Triple-timer Counter Interface**

Symbol	Description	Min	Max	Units
$T_{PWTTCOCLK}$	Triple-timer counter output clock pulse width	60.4	–	ns
$F_{TTCOCLK}$	Triple-timer counter output clock frequency	–	16.5	MHz
$T_{TTCICLKL}$	Triple-timer counter input clock high pulse width	1.5 x $1/F_{LPD_LSBUS_CTRLMAX}$	–	ns
$T_{TTCICLKH}$	Triple-timer counter input clock low pulse width	1.5 x $1/F_{LPD_LSBUS_CTRLMAX}$	–	ns
$F_{TTCICLK}$	Triple-timer counter input clock frequency	–	$F_{LPD_LSBUS_CTRLMAX}/3$	MHz

Notes:

1. All timing values assume an ideal external input clock. Your actual timing budget must account for additional external clock jitter.

PS Watchdog Timer Interface

Table 55: **Watchdog Timer Interface**

Symbol	Description	Min	Max	Units
F_{WDTCLK}	Watchdog timer input clock frequency	–	100	MHz

PS-GTR Transceiver

Table 56: **PS-GTR Transceiver DC Specifications**

Symbol	DC Parameter	Conditions	Min	Typ	Max	Units
DV_{PPIN}	Differential peak-to-peak input voltage (external AC coupled)		100	–	1200	mV
V_{IN}	Single-ended input voltage. Voltage measured at the pin referenced to GND		75	–	$V_{PS_MGTRAVCC}$	mV
V_{CMIN}	Common mode input voltage		–	0	–	mV
D_{VPPOUT}	Differential peak-to-peak output voltage[1]	Transmitter output swing is set to maximum value	800	–	–	mV
$V_{CMOUTAC}$	Common mode output voltage: AC coupled (equation based)		$V_{PS_MGTRAVCC} - D_{VPPOUT}/2$			mV
R_{IN}	Differential input resistance		–	100	–	Ω
R_{OUT}	Differential output resistance		–	100	–	Ω
$R_{MGTRREF}$	Resistor value between calibration resistor pin to GND		497.5	500	502.5	Ω
T_{OSKEW}	Transmitter output pair (TXP and TXN) intra-pair skew (All packages)		–	–	20	ps
C_{EXT}	Recommended external AC coupling capacitor[2]		–	100	–	nF

Notes:

1. The output swing and pre-emphasis levels are programmable using the attributes discussed in the *Zynq UltraScale+ Device Technical Reference Manual* (UG1085), and can result in values lower than reported in this table.
2. Other values can be used as appropriate to conform to specific protocols and standards.

Table 57: **PS-GTR Transceiver Clock DC Input Level Specification**

Symbol	DC Parameter	Min	Typ	Max	Units
V_{IDIFF}	Differential peak-to-peak input voltage	250	–	2000	mV
R_{IN}	Differential input resistance	–	100	–	Ω
C_{EXT}	Required external AC coupling capacitor	–	10	–	nF

Table 58: **PS-GTR Transceiver Performance**

Symbol	Description	Speed Grade			Units
		-3	-2	-1	
F_{GTRMAX}	PS-GTR maximum line rate	6.0	6.0	6.0	Gb/s
F_{GTRMIN}	PS-GTR minimum line rate	1.25	1.25	1.25	Gb/s

Table 59: **PS-GTR Transceiver PLL/Lock Time Adaptation**

Symbol	Description	Min	Typ	Max	Units
T_{LOCK}	Initial PLL lock	–	–	0.11	ms
T_{DLOCK}	Clock recovery phase acquisition and adaptation time	–	–	24×10^6	UI

Table 60: **PS-GTR Transceiver Reference Clock Switching Characteristics**

Symbol	Description	Conditions	All Speed Grades			Units
			Min	Typ	Max	
F_{GCLK}	Reference clock frequencies supported	PCI Express®	100 MHz			
		SATA	125 MHz or 150 MHz			
		USB 3.0	26 MHz, 52 MHz, or 100 MHz			
		DisplayPort	27 MHz, 108 MHz, or 135 MHz			
		SGMII	125 MHz			
T_{RCLK}	Reference clock rise time	20% – 80%	–	200	–	ps
T_{FCLK}	Reference clock fall time	80% – 20%	–	200	–	ps
T_{DCREF}	Reference clock duty cycle	Transceiver PLL only	40	–	60	%
		USB 3.0 with reference clock <40 MHz	47.5	–	52.5	%

Table 61: **PS-GTR Transceiver Reference Clock Oscillator Selection Phase Noise Mask**

Symbol	Description[1]	Offset Frequency	Min	Typ	Max	Units
$PLL_{REFCLKMASK}$	PLL reference clock select phase noise mask at REFCLK frequency = 25 MHz	100	–	–	–102	dBc/Hz
		1 KHz	–	–	–124	
		10 KHz	–	–	–132	
		100 KHz	–	–	–139	
		1 MHz	–	–	–152	
		10 MHz	–	–	–154	
	PLL reference clock select phase noise mask at REFCLK frequency = 50 MHz	100	–	–	–96	dBc/Hz
		1 KHz	–	–	–118	
		10 KHz	–	–	–126	
		100 KHz	–	–	–133	
		1 MHz	–	–	–146	
		10 MHz	–	–	–148	
	PLL reference clock select phase noise mask at REFCLK frequency = 100 MHz	100	–	–	–90	dBc/Hz
		1 KHz	–	–	–112	
		10 KHz	–	–	–120	
		100 KHz	–	–	–127	
		1 MHz	–	–	–140	
		10 MHz	–	–	–142	
	PLL reference clock select phase noise mask at REFCLK frequency = 125 MHz	100	–	–	–88	dBc/Hz
		1 KHz	–	–	–110	
		10 KHz	–	–	–118	
		100 KHz	–	–	–125	
		1 MHz	–	–	–138	
		10 MHz	–	–	–140	
	PLL reference clock select phase noise mask at REFCLK frequency = 150 MHz	100	–	–	–86	dBc/Hz
		1 KHz	–	–	–108	
		10 KHz	–	–	–116	
		100 KHz	–	–	–123	
		1 MHz	–	–	–136	
		10 MHz	–	–	–138	

Notes:

1. For reference clock frequencies not in this table, use the phase noise mask for the nearest reference clock frequency.

Table 62: **PS-GTR Transceiver Transmitter Switching Characteristics**

Symbol	Description	Condition	Min	Typ	Max	Units
F_{GTRTX}	Serial data rate range		1.25	–	6.0	Gb/s
T_{RTX}	TX rise time	20%–80%	–	65	–	ps
T_{FTX}	TX fall time	80%–20%	–	65	–	ps

Table 63: **PS-GTR Transceiver Receiver Switching Characteristics**

Symbol	Description	Condition	Min	Typ	Max	Units
F_{GTRRX}	Serial data rate		1.25	–	6	Gb/s
RX_{SST}	Receiver spread-spectrum tracking	Modulated at 33 KHz	–5000	–	0	ppm
RX_{PPMTOL}	Data/REFCLK PPM offset tolerance	All data rates	–350	–	350	ppm

Table 64: **PCI Express Protocol Characteristics (PS-GTR Transceivers)**

Standard	Description[1]	Line Rate (Mb/s)	Min	Max	Units
PCI Express Transmitter Jitter Generation					
PCI Express Gen 1	Total transmitter jitter	2500	–	0.25	UI
PCI Express Gen 2	Total transmitter jitter	5000	–	0.25	UI
PCI Express Receiver High Frequency Jitter Tolerance					
PCI Express Gen 1	Total receiver jitter tolerance	2500	0.65	–	UI
PCI Express Gen 2[2]	Receiver inherent timing error	5000	0.4	–	UI
	Receiver inherent deterministic timing error	5000	0.3	–	UI

Notes:

1. Tested per card electromechanical (CEM) methodology.
2. Between 1 MHz and 10 MHz the minimum sinusoidal jitter roll-off with a slope of 20 dB/decade.

Table 65: **Serial ATA (SATA) Protocol Characteristics (PS-GTR Transceivers)**

Standard	Description	Line Rate (Mb/s)	Min	Max	Units
Serial ATA Transmitter Jitter Generation					
SATA Gen 1	Total transmitter jitter	1500	–	0.37	UI
SATA Gen 2	Total transmitter jitter	3000	–	0.37	UI
SATA Gen 3	Total transmitter jitter	6000	–	0.52	UI
Serial ATA Receiver High Frequency Jitter Tolerance					
SATA Gen 1	Total receiver jitter tolerance	1500	0.27	–	UI
SATA Gen 2	Total receiver jitter tolerance	3000	0.27	–	UI
SATA Gen 3	Total receiver jitter tolerance	6000	0.16	–	UI

Table 66: **DisplayPort Protocol Characteristics (PS-GTR Transceivers)**

Standard	Description[1]	Line Rate (Mb/s)	Min	Max	Units
DisplayPort Transmitter Jitter Generation					
RBR	Total transmitter jitter	1620	–	0.42	UI
HBR	Total transmitter jitter	2700	–	0.42	UI
HBR2 D10.2	Total transmitter jitter	5400	–	0.40	UI
HBR2 CPAT	Total transmitter jitter	5400	–	0.58	UI

Notes:

1. Only the transmitter is supported.

Table 67: **USB 3.0 Protocol Characteristics (PS-GTR Transceivers)**

Standard	Description	Line Rate (Mb/s)	Min	Max	Units
USB 3.0 Transmitter Jitter Generation					
USB 3.0	Total transmitter jitter	5000	–	0.66	UI
USB 3.0 Receiver High Frequency Jitter Tolerance					
USB 3.0	Total receiver jitter tolerance	5000	0.2	–	UI

Table 68: **Serial-GMII Protocol Characteristics (PS-GTR Transceivers)**

Standard	Description	Line Rate (Mb/s)	Min	Max	Units
Serial-GMII Transmitter Jitter Generation					
SGMII	Deterministic transmitter jitter	1250	–	0.25	UI
Serial-GMII Receiver High Frequency Jitter Tolerance					
SGMII	Total receiver jitter tolerance	1250	0.25	–	UI

PS System Monitor Specifications

Table 69: **PS SYSMON Specifications**

Parameter	Comments	Conditions	Min	Typ	Max	Units
V_{CC_PSADC} = 1.8V ±3%, T_j = –40°C to 100°C, typical values at T_j = 40°C						
ADC Accuracy (T_j = –55°C to 125°C) [1]						
Resolution			10	–	–	Bits
Sample rate			–	–	1	MS/s
RMS code noise	On-chip reference		–	1	–	LSBs
On-Chip Sensor Accuracy						
Temperature sensor error		T_j = –55°C to 110°C	–	–	±3.5	°C
		T_j = 110°C to 125°C	–	–	±5	°C
Supply sensor error[2]	Supply voltages less than or electrically connected to V_{CC_PSADC}	T_j = –55°C to 125°C	–	–	±1	%
	Supply voltages nominally at 1.8V but with the potential to go above V_{CC_PSADC}	T_j = –55°C to 125°C	–	–	±1.5	%
	Supply voltages nominally in the 2.0V to 3.3V range	T_j = –55°C to 125°C	–	–	±2.5	%
Conversion Rate[3]						
Conversion time—continuous	t_{CONV}	Number of ADCCLK cycles	26	–	32	Cycles
Conversion time—event	t_{CONV}	Number of ADCCLK cycles	–	–	21	Cycles
DRP clock frequency	DCLK	AMS REFCLK frequency	8	–	250	MHz
ADC clock frequency	ADCCLK	Derived from DCLK	1	–	26	MHz

Notes:

1. ADC offset errors are removed by enabling the ADC automatic offset calibration feature. The values are specified for when this feature is enabled.
2. Supply sensor offset and gain errors are removed by enabling the automatic offset and gain calibration feature. The values are specified for when this feature is enabled.
3. See the Adjusting the Acquisition Settling Time section in the *UltraScale Architecture System Monitor User Guide* (UG580).

Programmable Logic (PL) Performance Characteristics

This section provides the performance characteristics of some common functions and designs implemented in the Zynq UltraScale+ MPSoCs. These values are subject to the same guidelines as the AC Switching Characteristics section.

In each of the following LVDS performance tables, the I/O bank type is either high performance (HP) or high density (HD).

In LVDS component mode:

- For the input/output registers in HP I/O banks, the Vivado tools limit clock frequencies to 312.9 MHz for all speed grades.
- For IDDR in HP I/O banks, Vivado tools limit clock frequencies to 625.0 MHz for all speed grades.

- For ODDR in HP I/O banks, Vivado tools limit clock frequencies to 625.0 MHz for all speed grades.

Table 70: **LVDS Component Mode Performance**

Description	I/O Bank Type	Speed Grade and V_{CCINT} Operating Voltages										Units
		0.90V		0.85V				0.72V				
		-3		-2		-1		-2		-1		
		Min	Max	Min	Max	Min	Max	Min	Max	Min	Max	
LVDS TX DDR (OSERDES 4:1, 8:1)	HP	0	1250	0	1250	0	1250	0	1250	0	1250	Mb/s
LVDS TX SDR (OSERDES 2:1, 4:1)	HP	0	625	0	625	0	625	0	625	0	625	Mb/s
LVDS RX DDR (ISERDES 1:4, 1:8)[1]	HP	0	1250	0	1250	0	1250	0	1250	0	1250	Mb/s
LVDS RX DDR	HD	0	250	0	250	0	250	0	250	0	250	Mb/s
LVDS RX SDR (ISERDES 1:2, 1:4)[1]	HP	0	625	0	625	0	625	0	625	0	625	Mb/s
LVDS RX SDR	HD	0	125	0	125	0	125	0	125	0	125	Mb/s

Notes:

1. LVDS receivers are typically bounded with certain applications to achieve maximum performance. Package skews are not included and should be removed through PCB routing.

Table 71: **LVDS Native Mode Performance**

Description[1, 2]	DATA_WIDTH	I/O Bank Type	Speed Grade and V_{CCINT} Operating Voltages										Units
			0.90V		0.85V				0.72V				
			-3[3]		-2[3]		-1		-2[3]		-1		
			Min	Max	Min	Max	Min	Max	Min	Max	Min	Max	
LVDS TX DDR (TX_BITSLICE)	4	HP	375	1600	375	1600	375	1600	375	1400	375	1260	Mb/s
	8		375	1600	375	1600	375	1600	375	1600	375	1600	Mb/s
LVDS TX SDR (TX_BITSLICE)	4	HP	187.5	800	187.5	800	187.5	800	187.5	700	187.5	630	Mb/s
	8		187.5	800	187.5	800	187.5	800	187.5	800	187.5	800	Mb/s
LVDS RX DDR (RX_BITSLICE)[4]	4	HP	375	1600[5]	375	1600[5]	375	1600[5]	375	1400[5]	375	1260[5]	Mb/s
	8		375	1600[5]	375	1600[5]	375	1600[5]	375	1600[5]	375	1600[5]	Mb/s
LVDS RX SDR (RX_BITSLICE)[4]	4	HP	187.5	800	187.5	800	187.5	800	187.5	700	187.5	630	Mb/s
	8		187.5	800	187.5	800	187.5	800	187.5	800	187.5	800	Mb/s

Notes:

1. Native mode is supported through the High-Speed SelectIO Interface Wizard available with the Vivado Design Suite. The performance values assume a source-synchronous interface.
2. PLL settings can restrict the minimum allowable data rate. For example, when using the PLL with CLKOUTPHY_MODE = VCO_HALF the minimum frequency is PLL_F_{VCOMIN}/2.
3. In the SBVA484 and SFRA484 packages, the maximum data rate is 1260 Mb/s for DDR interfaces and 630 Mb/s for SDR interfaces.
4. LVDS receivers are typically bounded with certain applications to achieve maximum performance. Package skews are not included and should be removed through PCB routing.
5. Asynchronous receiver performance is limited to 1300 Mb/s for -3/-2 speed grades and to 1250 Mb/s for -1 speed grades.

Table 72: **MIPI D-PHY Performance**

Description	I/O Bank Type	Speed Grade and V_{CCINT} Operating Voltages					Units
		0.90V	0.85V		0.72V		
		-3[1]	-2[1]	-1	-2	-1	
MIPI D-PHY transmitter or receiver	HP	1500[2]	1500[2]	1260[3]	1260[3]	1260	Mb/s

Notes:

1. In the SBVA484 and SFRA484 packages, the data rate is 1260 Mb/s. Notes 2 and 3 do not apply to these packages.
2. The Zynq UltraScale+ MPSoCs performance is specified at 1500 Mb/s when designing with Vivado Design Suite v2019.1 or earlier. For XC and XA devices, the performance is specified at 2500 Mb/s when designing with Vivado Design Suite v2019.1.1 or later. XQ devices are specified at 1500 Mb/s.
3. The Zynq UltraScale+ MPSoCs performance is specified at 1260 Mb/s when designing with Vivado Design Suite v2019.1 or earlier. For XC and XA devices, the performance is specified at 2500 Mb/s when designing with Vivado Design Suite v2019.1.1 or later. XQ devices are specified at 1260 Mb/s.

Table 73: **LVDS Native-Mode 1000BASE-X Support**

Description[1]	I/O Bank Type	Speed Grade and V_{CCINT} Operating Voltages				
		0.90V	0.85V		0.72V	
		-3	-2	-1	-2	-1
1000BASE-X	HP	Yes				

Notes:

1. 1000BASE-X support is based on the *IEEE Standard for CSMA/CD Access Method and Physical Layer Specifications* (IEEE Std 802.3-2008).

The following table provides the maximum data rates for applicable memory standards using the Zynq UltraScale+ MPSoC memory PHY. Refer to Memory Interfaces for the complete list of memory interface standards supported and detailed specifications. The final performance of the memory interface is determined through a complete design implemented in the Vivado Design Suite, following guidelines in the *UltraScale Architecture PCB Design User Guide* (UG583), electrical analysis, and characterization of the system.

Table 74: **Maximum Physical Interface (PHY) Rate for Memory Interfaces**

Memory Standard	Packages[1]	DRAM Type	Speed Grade and V_{CCINT} Operating Voltages					Units
			0.90V	0.85V		0.72V		
			-3	-2	-1	-2	-1	
DDR4	All FFV, FFR, and FBVB900 packages	Single rank component	2666	2666	2400	2400	2133	Mb/s
		1 rank DIMM[2, 3, 4]	2400	2400	2133	2133	1866	Mb/s
		2 rank DIMM[2, 5]	2133	2133	1866	1866	1600	Mb/s
		4 rank DIMM[2, 6]	1600	1600	1333	1333	N/A	Mb/s
	SFVC784 and SFRC784	Single rank component	2400	2400	2133	2133	1866	Mb/s
		1 rank DIMM[2, 3]	2133	2133	1866	1866	1600	Mb/s
		2 rank DIMM[2, 5]	1866	1866	1600	1600	1600	Mb/s

Table 74: **Maximum Physical Interface (PHY) Rate for Memory Interfaces** *(cont'd)*

Memory Standard	Packages[1]	DRAM Type	Speed Grade and V_{CCINT} Operating Voltages					Units
			0.90V	0.85V		0.72V		
			-3	-2	-1	-2	-1	
DDR3	All FFV, FFR, and FBVB900 packages	Single rank component	2133	2133	2133	2133	1866	Mb/s
		1 rank DIMM[2, 3]	1866	1866	1866	1866	1600	Mb/s
		2 rank DIMM[2, 5]	1600	1600	1600	1600	1333	Mb/s
		4 rank DIMM[2, 6]	1066	1066	1066	1066	800	Mb/s
	SFVC784 and SFRC784	Single rank component	1866	1866	1866	1866	1600	Mb/s
		1 rank DIMM[2, 3]	1600	1600	1600	1600	1600	Mb/s
		2 rank DIMM[2, 5]	1600	1600	1600	1600	1333	Mb/s
		4 rank DIMM[2, 6]	1066	1066	1066	1066	800	Mb/s
DDR3L	All FFV, FFR, and FBVB900 packages	Single rank component	1866	1866	1866	1866	1600	Mb/s
		1 rank DIMM[2, 3]	1600	1600	1600	1600	1333	Mb/s
		2 rank DIMM[2, 5]	1333	1333	1333	1333	1066	Mb/s
		4 rank DIMM[2, 6]	800	800	800	800	606	Mb/s
	SFVC784 and SFRC784	Single rank component	1600	1600	1600	1600	1600	Mb/s
		1 rank DIMM[2, 3]	1600	1600	1600	1600	1333	Mb/s
		2 rank DIMM[2, 5]	1333	1333	1333	1333	1066	Mb/s
		4 rank DIMM[2, 6]	800	800	800	800	606	Mb/s
QDR II+	All	Single rank component[7]	633	633	600	600	550	MHz
RLDRAM 3	All FFV, FFR, and FBVB900 pacakges	Single rank component	1200	1200	1066	1066	933	MHz
	SFVC784 and SFRC784	Single rank component	1066	1066	933	933	800	MHz
QDR IV XP	All	Single rank component	1066	1066	1066	933	933	MHz
LPDDR3	All	Single rank component	1600	1600	1600	1600	1600	Mb/s

Notes:

1. The SBVA484, SFRA484, and SFVA625 packages do not support the PL memory interfaces.
2. Dual in-line memory module (DIMM) includes RDIMM, SODIMM, UDIMM, and LRDIMM.
3. Includes: 1 rank 1 slot, DDP 2 rank, LRDIMM 2 or 4 rank 1 slot.
4. For the DDR4 DDP components at -3 and -2 (V_{CCINT} = 0.85V) speed grades, the maximum data rate is 2133 Mb/s for six or more DDP devices. For five or less DDP devices, use the single rank DIMM data rates for the -3 and -2 (V_{CCINT} = 0.85V) speed grades.
5. Includes: 2 rank 1 slot, 1 rank 2 slot, LRDIMM 2 rank 2 slot.
6. Includes: 2 rank 2 slot, 4 rank 1 slot.
7. The QDRII+ performance specifications are for burst-length 4 (BL = 4) implementations.

Programmable Logic (PL) Switching Characteristics

The following IOB high-density (HD) and IOB high-performance (HP) tables summarize the values of standard-specific data input delay adjustments, output delays terminating at pads (based on standard) and 3-state delays.

- $T_{INBUF_DELAY_PAD_I}$ is the delay from IOB pad through the input buffer to the I-pin of an IOB pad. The delay varies depending on the capability of the SelectIO input buffer.
- $T_{OUTBUF_DELAY_O_PAD}$ is the delay from the O pin to the IOB pad through the output buffer of an IOB pad. The delay varies depending on the capability of the SelectIO output buffer.

- $T_{OUTBUF_DELAY_TD_PAD}$ is the delay from the T pin to the IOB pad through the output buffer of an IOB pad, when 3-state is disabled. The delay varies depending on the SelectIO capability of the output buffer. In HP I/O banks, the internal DCI termination turn-on time is always faster than $T_{OUTBUF_DELAY_TD_PAD}$ when the DCITERMDISABLE pin is used. In HD I/O banks, the on-die termination turn-on time is always faster than $T_{OUTBUF_DELAY_TD_PAD}$ when the INTERMDISABLE pin is used.

IOB High Density (HD) Switching Characteristics

Table 75: **IOB High Density (HD) Switching Characteristics**

I/O Standards	$T_{INBUF_DELAY_PAD_I}$					$T_{OUTBUF_DELAY_O_PAD}$					$T_{OUTBUF_DELAY_TD_PAD}$					Units
	0.90V	0.85V		0.72V		0.90V	0.85V		0.72V		0.90V	0.85V		0.72V		
	-3	-2	-1	-2	-1	-3	-2	-1	-2	-1	-3	-2	-1	-2	-1	
DIFF_HSTL_I_18_F	0.873	0.978	1.058	0.978	1.058	1.510	1.574	1.718	1.966	2.101	1.160	1.160	1.271	1.515	1.544	ns
DIFF_HSTL_I_18_S	0.873	0.978	1.058	0.978	1.058	1.742	1.805	1.950	2.197	2.333	1.748	1.748	1.867	2.103	2.104	ns
DIFF_HSTL_I_F	0.873	0.978	1.058	0.978	1.058	1.563	1.611	1.762	2.003	2.145	1.313	1.313	1.417	1.668	1.668	ns
DIFF_HSTL_I_S	0.873	0.978	1.058	0.978	1.058	1.696	1.798	1.913	2.190	2.296	1.630	1.630	1.780	1.985	1.986	ns
DIFF_HSUL_12_F	0.796	0.911	0.977	0.911	0.977	1.493	1.573	1.703	1.965	2.086	1.222	1.222	1.335	1.577	1.578	ns
DIFF_HSUL_12_S	0.796	0.911	0.977	0.911	0.977	1.653	1.711	1.864	2.103	2.247	1.536	1.536	1.665	1.891	1.891	ns
DIFF_SSTL12_F	0.796	0.906	0.977	0.906	0.977	1.577	1.643	1.792	2.035	2.175	1.285	1.285	1.423	1.640	1.640	ns
DIFF_SSTL12_S	0.796	0.906	0.977	0.906	0.977	1.726	1.784	1.948	2.176	2.331	1.567	1.567	1.706	1.922	1.922	ns
DIFF_SSTL135_F	0.807	0.927	0.995	0.927	0.995	1.558	1.625	1.765	2.017	2.148	1.341	1.341	1.458	1.696	1.696	ns
DIFF_SSTL135_II_F	0.807	0.927	0.995	0.927	0.995	1.560	1.623	1.770	2.015	2.153	1.325	1.325	1.470	1.680	1.689	ns
DIFF_SSTL135_II_S	0.807	0.927	0.995	0.927	0.995	1.694	1.768	1.916	2.160	2.299	1.722	1.722	1.911	2.077	2.078	ns
DIFF_SSTL135_S	0.807	0.927	0.995	0.927	0.995	1.796	1.869	2.025	2.261	2.408	1.814	1.814	1.976	2.169	2.169	ns
DIFF_SSTL15_F	0.840	0.928	1.020	0.928	1.020	1.559	1.628	1.771	2.020	2.154	1.374	1.374	1.483	1.729	1.729	ns
DIFF_SSTL15_II_F	0.840	0.928	1.020	0.928	1.020	1.574	1.622	1.778	2.014	2.161	1.356	1.356	1.442	1.711	1.712	ns
DIFF_SSTL15_II_S	0.840	0.928	1.020	0.928	1.020	1.769	1.821	1.987	2.213	2.370	1.895	1.895	2.047	2.250	2.250	ns
DIFF_SSTL15_S	0.840	0.928	1.020	0.928	1.020	1.752	1.824	1.977	2.216	2.360	1.743	1.743	1.907	2.098	2.098	ns
DIFF_SSTL18_II_F	0.873	0.961	1.038	0.961	1.038	1.672	1.729	1.880	2.121	2.263	1.377	1.377	1.492	1.732	1.732	ns
DIFF_SSTL18_II_S	0.873	0.961	1.038	0.961	1.038	1.748	1.796	1.965	2.188	2.348	1.616	1.616	1.800	1.971	1.972	ns
DIFF_SSTL18_I_F	0.873	0.961	1.038	0.961	1.038	1.539	1.609	1.755	2.001	2.138	1.220	1.220	1.313	1.575	1.575	ns
DIFF_SSTL18_I_S	0.873	0.961	1.038	0.961	1.038	1.728	1.786	1.942	2.178	2.325	1.677	1.677	1.836	2.032	2.033	ns
HSTL_I_18_F	0.854	0.947	1.021	0.947	1.021	1.510	1.574	1.718	1.966	2.101	1.160	1.160	1.271	1.515	1.544	ns
HSTL_I_18_S	0.854	0.947	1.021	0.947	1.021	1.742	1.805	1.950	2.197	2.333	1.748	1.748	1.867	2.103	2.104	ns
HSTL_I_F	0.748	0.856	0.900	0.856	0.900	1.563	1.611	1.762	2.003	2.145	1.313	1.313	1.417	1.668	1.668	ns
HSTL_I_S	0.748	0.856	0.900	0.856	0.900	1.696	1.798	1.913	2.190	2.296	1.630	1.630	1.780	1.985	1.986	ns
HSUL_12_F	0.712	0.780	0.867	0.780	0.867	1.493	1.573	1.703	1.965	2.086	1.222	1.222	1.335	1.577	1.578	ns
HSUL_12_S	0.712	0.780	0.867	0.780	0.867	1.653	1.711	1.864	2.103	2.247	1.536	1.536	1.665	1.891	1.891	ns
LVCMOS12_F_12	0.761	0.918	0.976	0.918	0.976	1.652	1.689	1.856	2.081	2.239	1.202	1.202	1.317	1.557	1.557	ns
LVCMOS12_F_4	0.761	0.918	0.976	0.918	0.976	1.714	1.742	1.922	2.134	2.305	1.353	1.353	1.478	1.708	1.708	ns
LVCMOS12_F_8	0.761	0.918	0.976	0.918	0.976	1.668	1.714	1.879	2.106	2.262	1.292	1.292	1.432	1.647	1.647	ns
LVCMOS12_S_12	0.761	0.918	0.976	0.918	0.976	2.019	2.073	2.247	2.465	2.630	1.581	1.581	1.717	1.936	1.937	ns
LVCMOS12_S_4	0.761	0.918	0.976	0.918	0.976	1.979	1.979	2.182	2.371	2.565	1.633	1.633	1.772	1.988	1.989	ns
LVCMOS12_S_8	0.761	0.918	0.976	0.918	0.976	2.132	2.205	2.406	2.597	2.789	1.767	1.767	1.928	2.122	2.123	ns

Table 75: **IOB High Density (HD) Switching Characteristics** *(cont'd)*

I/O Standards	$T_{INBUF_DELAY_PAD_I}$					$T_{OUTBUF_DELAY_O_PAD}$					$T_{OUTBUF_DELAY_TD_PAD}$					Units
	0.90V	0.85V		0.72V		0.90V	0.85V		0.72V		0.90V	0.85V		0.72V		
	-3	-2	-1	-2	-1	-3	-2	-1	-2	-1	-3	-2	-1	-2	-1	
LVCMOS15_F_12	0.775	0.905	0.958	0.905	0.958	1.691	1.713	1.892	2.105	2.275	1.275	1.275	1.428	1.630	1.630	ns
LVCMOS15_F_16	0.775	0.905	0.958	0.905	0.958	1.665	1.722	1.881	2.114	2.264	1.260	1.260	1.407	1.615	1.615	ns
LVCMOS15_F_4	0.775	0.905	0.958	0.905	0.958	1.747	1.825	1.959	2.217	2.342	1.453	1.453	1.557	1.808	1.809	ns
LVCMOS15_F_8	0.775	0.905	0.958	0.905	0.958	1.721	1.778	1.930	2.170	2.313	1.378	1.378	1.458	1.733	1.733	ns
LVCMOS15_S_12	0.775	0.905	0.958	0.905	0.958	1.936	1.991	2.139	2.383	2.522	1.516	1.516	1.648	1.871	1.871	ns
LVCMOS15_S_16	0.775	0.905	0.958	0.905	0.958	2.172	2.172	2.389	2.564	2.772	1.707	1.707	1.888	2.062	2.062	ns
LVCMOS15_S_4	0.775	0.905	0.958	0.905	0.958	2.274	2.313	2.483	2.705	2.866	1.952	1.952	2.123	2.307	2.307	ns
LVCMOS15_S_8	0.775	0.905	0.958	0.905	0.958	2.170	2.170	2.400	2.562	2.783	1.817	1.817	1.984	2.172	2.173	ns
LVCMOS18_F_12	0.810	0.915	0.958	0.915	0.958	1.741	1.805	1.962	2.197	2.345	1.383	1.383	1.471	1.738	1.738	ns
LVCMOS18_F_16	0.810	0.915	0.958	0.915	0.958	1.698	1.785	1.917	2.177	2.300	1.338	1.338	1.446	1.693	1.693	ns
LVCMOS18_F_4	0.810	0.915	0.958	0.915	0.958	1.815	1.868	2.013	2.260	2.396	1.472	1.472	1.599	1.827	1.832	ns
LVCMOS18_F_8	0.810	0.915	0.958	0.915	0.958	1.785	1.797	1.979	2.189	2.362	1.384	1.384	1.487	1.739	1.739	ns
LVCMOS18_S_12	0.810	0.915	0.958	0.915	0.958	2.163	2.201	2.408	2.593	2.791	1.762	1.762	1.894	2.117	2.118	ns
LVCMOS18_S_16	0.810	0.915	0.958	0.915	0.958	2.102	2.173	2.362	2.565	2.745	1.702	1.702	1.834	2.057	2.057	ns
LVCMOS18_S_4	0.810	0.915	0.958	0.915	0.958	2.342	2.346	2.567	2.738	2.950	1.951	1.951	2.092	2.306	2.306	ns
LVCMOS18_S_8	0.810	0.915	0.958	0.915	0.958	2.275	2.292	2.511	2.684	2.894	1.848	1.848	2.008	2.203	2.204	ns
LVCMOS25_F_12	0.963	0.988	1.042	0.988	1.042	2.153	2.153	2.453	2.545	2.836	1.692	1.692	1.856	2.047	2.047	ns
LVCMOS25_F_16	0.963	0.988	1.042	0.988	1.042	2.105	2.105	2.406	2.497	2.789	1.623	1.623	1.786	1.978	1.979	ns
LVCMOS25_F_4	0.963	0.988	1.042	0.988	1.042	2.317	2.344	2.554	2.736	2.937	1.842	1.842	2.039	2.197	2.197	ns
LVCMOS25_F_8	0.963	0.988	1.042	0.988	1.042	2.184	2.184	2.516	2.576	2.899	1.726	1.726	1.910	2.081	2.081	ns
LVCMOS25_S_12	0.963	0.988	1.042	0.988	1.042	2.550	2.558	2.840	2.950	3.223	1.971	1.971	2.194	2.326	2.327	ns
LVCMOS25_S_16	0.963	0.988	1.042	0.988	1.042	2.449	2.449	2.740	2.841	3.123	1.852	1.852	2.063	2.207	2.207	ns
LVCMOS25_S_4	0.963	0.988	1.042	0.988	1.042	2.770	2.770	3.066	3.162	3.449	2.224	2.224	2.458	2.579	2.579	ns
LVCMOS25_S_8	0.963	0.988	1.042	0.988	1.042	2.663	2.663	2.963	3.055	3.346	2.091	2.091	2.373	2.446	2.446	ns
LVCMOS33_F_12	1.154	1.154	1.213	1.154	1.213	2.415	2.415	2.651	2.807	3.034	1.754	1.754	1.915	2.109	2.109	ns
LVCMOS33_F_16	1.154	1.154	1.213	1.154	1.213	2.381	2.383	2.603	2.775	2.986	1.734	1.734	1.869	2.089	2.089	ns
LVCMOS33_F_4	1.154	1.154	1.213	1.154	1.213	2.541	2.541	2.765	2.933	3.148	1.932	1.932	2.135	2.287	2.287	ns
LVCMOS33_F_8	1.154	1.154	1.213	1.154	1.213	2.603	2.603	2.822	2.995	3.205	1.937	1.937	2.130	2.292	2.294	ns
LVCMOS33_S_12	1.154	1.154	1.213	1.154	1.213	2.705	2.705	3.047	3.097	3.430	2.049	2.049	2.318	2.404	2.404	ns
LVCMOS33_S_16	1.154	1.154	1.213	1.154	1.213	2.714	2.714	3.024	3.106	3.407	2.028	2.028	2.232	2.383	2.383	ns
LVCMOS33_S_4	1.154	1.154	1.213	1.154	1.213	2.999	2.999	3.340	3.391	3.723	2.320	2.320	2.610	2.675	2.675	ns
LVCMOS33_S_8	1.154	1.154	1.213	1.154	1.213	2.929	2.929	3.260	3.321	3.643	2.260	2.260	2.532	2.615	2.616	ns
LVDS_25	0.980	1.003	1.116	1.003	1.116	N/A	N/A	N/A	N/A	N/A	N/A	N/A	N/A	N/A	N/A	ns
LVPECL	0.980	1.003	1.116	1.003	1.116	N/A	N/A	N/A	N/A	N/A	N/A	N/A	N/A	N/A	N/A	ns
LVTTL_F_12	1.164	1.164	1.223	1.164	1.223	2.415	2.415	2.651	2.807	3.034	1.754	1.754	1.915	2.109	2.109	ns
LVTTL_F_16	1.164	1.164	1.223	1.164	1.223	2.464	2.464	2.732	2.856	3.115	1.750	1.750	1.986	2.105	2.117	ns
LVTTL_F_4	1.164	1.164	1.223	1.164	1.223	2.541	2.541	2.765	2.933	3.148	1.932	1.932	2.135	2.287	2.287	ns
LVTTL_F_8	1.164	1.164	1.223	1.164	1.223	2.582	2.582	2.787	2.974	3.170	1.910	1.910	2.063	2.265	2.265	ns
LVTTL_S_12	1.164	1.164	1.223	1.164	1.223	2.731	2.731	3.075	3.123	3.458	2.072	2.072	2.343	2.427	2.427	ns

Table 75: **IOB High Density (HD) Switching Characteristics** *(cont'd)*

I/O Standards	$T_{INBUF_DELAY_PAD_I}$					$T_{OUTBUF_DELAY_O_PAD}$					$T_{OUTBUF_DELAY_TD_PAD}$					Units
	0.90V	0.85V		0.72V		0.90V	0.85V		0.72V		0.90V	0.85V		0.72V		
	-3	-2	-1	-2	-1	-3	-2	-1	-2	-1	-3	-2	-1	-2	-1	
LVTTL_S_16	1.164	1.164	1.223	1.164	1.223	2.714	2.714	3.024	3.106	3.407	2.028	2.028	2.232	2.383	2.383	ns
LVTTL_S_4	1.164	1.164	1.223	1.164	1.223	2.999	2.999	3.340	3.391	3.723	2.320	2.320	2.610	2.675	2.675	ns
LVTTL_S_8	1.164	1.164	1.223	1.164	1.223	2.929	2.929	3.260	3.321	3.643	2.260	2.260	2.532	2.615	2.616	ns
SLVS_400_25	0.998	1.020	1.136	1.020	1.136	N/A	N/A	N/A	N/A	N/A	N/A	N/A	N/A	N/A	N/A	ns
SSTL12_F	0.712	0.780	0.867	0.780	0.867	1.577	1.643	1.792	2.035	2.175	1.285	1.285	1.423	1.640	1.640	ns
SSTL12_S	0.712	0.780	0.867	0.780	0.867	1.726	1.784	1.948	2.176	2.331	1.567	1.567	1.706	1.922	1.922	ns
SSTL135_F	0.731	0.798	0.881	0.798	0.881	1.558	1.625	1.765	2.017	2.148	1.341	1.341	1.458	1.696	1.696	ns
SSTL135_II_F	0.731	0.798	0.881	0.798	0.881	1.574	1.623	1.770	2.015	2.153	1.325	1.325	1.470	1.680	1.689	ns
SSTL135_II_S	0.731	0.798	0.881	0.798	0.881	1.694	1.768	1.916	2.160	2.299	1.722	1.722	1.911	2.077	2.078	ns
SSTL135_S	0.731	0.798	0.881	0.798	0.881	1.796	1.869	2.025	2.261	2.408	1.814	1.814	1.976	2.169	2.169	ns
SSTL15_F	0.731	0.838	0.880	0.838	0.880	1.544	1.612	1.754	2.004	2.137	1.357	1.357	1.464	1.712	1.713	ns
SSTL15_II_F	0.731	0.838	0.880	0.838	0.880	1.588	1.622	1.778	2.014	2.161	1.356	1.356	1.442	1.711	1.712	ns
SSTL15_II_S	0.731	0.838	0.880	0.838	0.880	1.769	1.821	1.987	2.213	2.370	1.895	1.895	2.047	2.250	2.250	ns
SSTL15_S	0.731	0.838	0.880	0.838	0.880	1.752	1.824	1.977	2.216	2.360	1.743	1.743	1.907	2.098	2.098	ns
SSTL18_II_F	0.854	0.947	1.021	0.947	1.021	1.699	1.729	1.880	2.121	2.263	1.377	1.377	1.492	1.732	1.732	ns
SSTL18_II_S	0.854	0.947	1.021	0.947	1.021	1.748	1.796	1.965	2.188	2.348	1.616	1.616	1.800	1.971	1.972	ns
SSTL18_I_F	0.854	0.947	1.021	0.947	1.021	1.566	1.609	1.755	2.001	2.138	1.220	1.220	1.313	1.575	1.575	ns
SSTL18_I_S	0.854	0.947	1.021	0.947	1.021	1.745	1.786	1.942	2.178	2.325	1.677	1.677	1.836	2.032	2.033	ns
SUB_LVDS	0.871	1.002	1.036	1.002	1.036	N/A	N/A	N/A	N/A	N/A	N/A	N/A	N/A	N/A	N/A	ns

IOB High Performance (HP) Switching Characteristics

Table 76: **IOB High Performance (HP) Switching Characteristics**

I/O Standards	$T_{INBUF_DELAY_PAD_I}$					$T_{OUTBUF_DELAY_O_PAD}$					$T_{OUTBUF_DELAY_TD_PAD}$					Units
	0.90V	0.85V		0.72V		0.90V	0.85V		0.72V		0.90V	0.85V		0.72V		
	-3	-2	-1	-2	-1	-3	-2	-1	-2	-1	-3	-2	-1	-2	-1	
DIFF_HSTL_I_12_F	0.288	0.394	0.402	0.394	0.402	0.410	0.423	0.443	0.423	0.443	0.514	0.553	0.582	0.553	0.582	ns
DIFF_HSTL_I_12_M	0.288	0.394	0.402	0.394	0.402	0.552	0.552	0.583	0.552	0.583	0.632	0.641	0.679	0.641	0.679	ns
DIFF_HSTL_I_12_S	0.288	0.394	0.402	0.394	0.402	0.752	0.752	0.800	0.752	0.800	0.813	0.813	0.868	0.813	0.868	ns
DIFF_HSTL_I_18_F	0.259	0.319	0.339	0.319	0.339	0.439	0.456	0.474	0.456	0.474	0.549	0.576	0.606	0.576	0.606	ns
DIFF_HSTL_I_18_M	0.259	0.319	0.339	0.319	0.339	0.563	0.570	0.603	0.570	0.603	0.636	0.653	0.692	0.653	0.692	ns
DIFF_HSTL_I_18_S	0.259	0.319	0.339	0.319	0.339	0.782	0.782	0.834	0.782	0.834	0.816	0.816	0.871	0.816	0.871	ns
DIFF_HSTL_I_DCI_12_F	0.288	0.394	0.402	0.394	0.402	0.393	0.406	0.429	0.406	0.429	0.502	0.534	0.564	0.534	0.564	ns
DIFF_HSTL_I_DCI_12_M	0.288	0.394	0.402	0.394	0.402	0.546	0.557	0.587	0.557	0.587	0.636	0.653	0.694	0.653	0.694	ns
DIFF_HSTL_I_DCI_12_S	0.288	0.394	0.402	0.394	0.402	0.755	0.755	0.806	0.755	0.806	0.842	0.842	0.907	0.842	0.907	ns
DIFF_HSTL_I_DCI_18_F	0.259	0.323	0.339	0.323	0.339	0.422	0.445	0.461	0.445	0.461	0.509	0.566	0.595	0.566	0.595	ns
DIFF_HSTL_I_DCI_18_M	0.259	0.323	0.339	0.323	0.339	0.546	0.555	0.586	0.555	0.586	0.626	0.643	0.684	0.643	0.684	ns
DIFF_HSTL_I_DCI_18_S	0.259	0.323	0.339	0.323	0.339	0.762	0.762	0.818	0.762	0.818	0.836	0.836	0.900	0.836	0.900	ns

Table 76: **IOB High Performance (HP) Switching Characteristics** *(cont'd)*

I/O Standards	$T_{INBUF_DELAY_PAD_I}$					$T_{OUTBUF_DELAY_O_PAD}$					$T_{OUTBUF_DELAY_TD_PAD}$					Units
	0.90V	0.85V		0.72V		0.90V	0.85V		0.72V		0.90V	0.85V		0.72V		
	-3	-2	-1	-2	-1	-3	-2	-1	-2	-1	-3	-2	-1	-2	-1	
DIFF_HSTL_I_DCI_F	0.335	0.397	0.417	0.397	0.417	0.407	0.431	0.445	0.431	0.445	0.517	0.555	0.575	0.555	0.575	ns
DIFF_HSTL_I_DCI_M	0.335	0.397	0.417	0.397	0.417	0.549	0.553	0.583	0.553	0.583	0.634	0.644	0.684	0.644	0.684	ns
DIFF_HSTL_I_DCI_S	0.335	0.397	0.417	0.397	0.417	0.767	0.767	0.823	0.767	0.823	0.848	0.848	0.912	0.848	0.912	ns
DIFF_HSTL_I_F	0.304	0.404	0.417	0.404	0.417	0.409	0.423	0.443	0.423	0.443	0.514	0.549	0.581	0.549	0.581	ns
DIFF_HSTL_I_M	0.304	0.404	0.417	0.404	0.417	0.549	0.555	0.586	0.555	0.586	0.624	0.640	0.677	0.640	0.677	ns
DIFF_HSTL_I_S	0.304	0.404	0.417	0.404	0.417	0.767	0.767	0.818	0.767	0.818	0.811	0.811	0.866	0.811	0.866	ns
DIFF_HSUL_12_DCI_F	0.320	0.381	0.400	0.381	0.400	0.411	0.425	0.443	0.425	0.443	0.520	0.558	0.586	0.558	0.586	ns
DIFF_HSUL_12_DCI_M	0.320	0.381	0.400	0.381	0.400	0.546	0.557	0.587	0.557	0.587	0.636	0.653	0.694	0.653	0.694	ns
DIFF_HSUL_12_DCI_S	0.320	0.381	0.400	0.381	0.400	0.737	0.737	0.787	0.737	0.787	0.822	0.822	0.885	0.822	0.885	ns
DIFF_HSUL_12_F	0.322	0.394	0.402	0.394	0.402	0.394	0.412	0.430	0.412	0.430	0.494	0.538	0.566	0.538	0.566	ns
DIFF_HSUL_12_M	0.322	0.394	0.402	0.394	0.402	0.552	0.552	0.583	0.552	0.583	0.632	0.641	0.679	0.641	0.679	ns
DIFF_HSUL_12_S	0.322	0.394	0.402	0.394	0.402	0.752	0.752	0.800	0.752	0.800	0.813	0.813	0.868	0.813	0.868	ns
DIFF_POD10_DCI_F	0.289	0.411	0.430	0.411	0.430	0.407	0.425	0.444	0.425	0.444	0.512	0.555	0.584	0.555	0.584	ns
DIFF_POD10_DCI_M	0.289	0.411	0.430	0.411	0.430	0.533	0.542	0.571	0.542	0.571	0.618	0.640	0.681	0.640	0.681	ns
DIFF_POD10_DCI_S	0.289	0.411	0.430	0.411	0.430	0.754	0.754	0.815	0.754	0.815	0.850	0.850	0.917	0.850	0.917	ns
DIFF_POD10_F	0.288	0.411	0.433	0.411	0.433	0.425	0.438	0.459	0.438	0.459	0.531	0.569	0.601	0.569	0.601	ns
DIFF_POD10_M	0.288	0.411	0.433	0.411	0.433	0.519	0.538	0.568	0.538	0.568	0.589	0.630	0.667	0.630	0.667	ns
DIFF_POD10_S	0.288	0.411	0.433	0.411	0.433	0.752	0.766	0.821	0.766	0.821	0.821	0.836	0.894	0.836	0.894	ns
DIFF_POD12_DCI_F	0.320	0.407	0.432	0.407	0.432	0.411	0.425	0.443	0.425	0.443	0.519	0.558	0.586	0.558	0.586	ns
DIFF_POD12_DCI_M	0.320	0.407	0.432	0.407	0.432	0.516	0.543	0.572	0.543	0.572	0.602	0.638	0.678	0.638	0.678	ns
DIFF_POD12_DCI_S	0.320	0.407	0.432	0.407	0.432	0.740	0.772	0.822	0.772	0.822	0.833	0.862	0.929	0.862	0.929	ns
DIFF_POD12_F	0.305	0.409	0.430	0.409	0.430	0.438	0.455	0.476	0.455	0.476	0.549	0.595	0.626	0.595	0.626	ns
DIFF_POD12_M	0.305	0.409	0.430	0.409	0.430	0.551	0.551	0.582	0.551	0.582	0.632	0.641	0.679	0.641	0.679	ns
DIFF_POD12_S	0.305	0.409	0.430	0.409	0.430	0.749	0.767	0.817	0.767	0.817	0.818	0.832	0.889	0.832	0.889	ns
DIFF_SSTL12_DCI_F	0.303	0.381	0.400	0.381	0.400	0.411	0.425	0.443	0.425	0.443	0.520	0.558	0.586	0.558	0.586	ns
DIFF_SSTL12_DCI_M	0.303	0.381	0.400	0.381	0.400	0.549	0.557	0.587	0.557	0.587	0.643	0.654	0.694	0.654	0.694	ns
DIFF_SSTL12_DCI_S	0.303	0.381	0.400	0.381	0.400	0.754	0.754	0.803	0.754	0.803	0.842	0.842	0.908	0.842	0.908	ns
DIFF_SSTL12_F	0.288	0.394	0.402	0.394	0.402	0.394	0.412	0.430	0.412	0.430	0.494	0.538	0.566	0.538	0.566	ns
DIFF_SSTL12_M	0.288	0.394	0.402	0.394	0.402	0.550	0.553	0.584	0.553	0.584	0.630	0.641	0.676	0.641	0.676	ns
DIFF_SSTL12_S	0.288	0.394	0.402	0.394	0.402	0.758	0.758	0.808	0.758	0.808	0.823	0.823	0.879	0.823	0.879	ns
DIFF_SSTL135_DCI_F	0.303	0.371	0.402	0.371	0.402	0.392	0.411	0.428	0.411	0.428	0.494	0.537	0.565	0.537	0.565	ns
DIFF_SSTL135_DCI_M	0.303	0.371	0.402	0.371	0.402	0.551	0.551	0.582	0.551	0.582	0.643	0.645	0.685	0.645	0.685	ns
DIFF_SSTL135_DCI_S	0.303	0.371	0.402	0.371	0.402	0.746	0.746	0.799	0.746	0.799	0.829	0.829	0.893	0.829	0.893	ns
DIFF_SSTL135_F	0.289	0.375	0.402	0.375	0.402	0.393	0.408	0.428	0.408	0.428	0.491	0.528	0.561	0.528	0.561	ns
DIFF_SSTL135_M	0.289	0.375	0.402	0.375	0.402	0.548	0.555	0.585	0.555	0.585	0.621	0.641	0.679	0.641	0.679	ns
DIFF_SSTL135_S	0.289	0.375	0.402	0.375	0.402	0.772	0.772	0.823	0.772	0.823	0.827	0.827	0.878	0.827	0.878	ns
DIFF_SSTL15_DCI_F	0.335	0.397	0.417	0.397	0.417	0.394	0.412	0.429	0.412	0.429	0.497	0.531	0.563	0.531	0.563	ns
DIFF_SSTL15_DCI_M	0.335	0.397	0.417	0.397	0.417	0.549	0.553	0.583	0.553	0.583	0.632	0.645	0.685	0.645	0.685	ns
DIFF_SSTL15_DCI_S	0.335	0.397	0.417	0.397	0.417	0.768	0.768	0.822	0.768	0.822	0.847	0.847	0.912	0.847	0.912	ns

Table 76: **IOB High Performance (HP) Switching Characteristics** *(cont'd)*

I/O Standards	$T_{INBUF_DELAY_PAD_I}$					$T_{OUTBUF_DELAY_O_PAD}$					$T_{OUTBUF_DELAY_TD_PAD}$					Units
	0.90V	0.85V		0.72V		0.90V	0.85V		0.72V		0.90V	0.85V		0.72V		
	-3	-2	-1	-2	-1	-3	-2	-1	-2	-1	-3	-2	-1	-2	-1	
DIFF_SSTL15_F	0.304	0.404	0.417	0.404	0.417	0.409	0.424	0.445	0.424	0.445	0.513	0.551	0.577	0.551	0.577	ns
DIFF_SSTL15_M	0.304	0.404	0.417	0.404	0.417	0.547	0.554	0.585	0.554	0.585	0.624	0.639	0.677	0.639	0.677	ns
DIFF_SSTL15_S	0.304	0.404	0.417	0.404	0.417	0.767	0.767	0.817	0.767	0.817	0.813	0.813	0.867	0.813	0.867	ns
DIFF_SSTL18_I_DCI_F	0.256	0.320	0.336	0.320	0.336	0.422	0.445	0.461	0.445	0.461	0.540	0.566	0.595	0.566	0.595	ns
DIFF_SSTL18_I_DCI_M	0.256	0.320	0.336	0.320	0.336	0.552	0.554	0.585	0.554	0.585	0.629	0.644	0.683	0.644	0.683	ns
DIFF_SSTL18_I_DCI_S	0.256	0.320	0.336	0.320	0.336	0.762	0.762	0.818	0.762	0.818	0.837	0.837	0.899	0.837	0.899	ns
DIFF_SSTL18_I_F	0.256	0.316	0.336	0.316	0.336	0.439	0.454	0.476	0.454	0.476	0.549	0.578	0.608	0.578	0.608	ns
DIFF_SSTL18_I_M	0.256	0.316	0.336	0.316	0.336	0.567	0.571	0.603	0.571	0.603	0.535	0.652	0.692	0.652	0.692	ns
DIFF_SSTL18_I_S	0.256	0.316	0.336	0.316	0.336	0.782	0.782	0.835	0.782	0.835	0.816	0.816	0.870	0.816	0.870	ns
HSLVDCI_15_F	0.336	0.393	0.415	0.393	0.415	0.407	0.425	0.443	0.425	0.443	0.513	0.548	0.579	0.548	0.579	ns
HSLVDCI_15_M	0.336	0.393	0.415	0.393	0.415	0.548	0.552	0.581	0.552	0.581	0.635	0.644	0.684	0.644	0.684	ns
HSLVDCI_15_S	0.336	0.393	0.415	0.393	0.415	0.748	0.748	0.802	0.748	0.802	0.827	0.827	0.890	0.827	0.890	ns
HSLVDCI_18_F	0.367	0.424	0.447	0.424	0.447	0.424	0.445	0.461	0.445	0.461	0.541	0.566	0.595	0.566	0.595	ns
HSLVDCI_18_M	0.367	0.424	0.447	0.424	0.447	0.563	0.567	0.598	0.567	0.598	0.647	0.658	0.699	0.658	0.699	ns
HSLVDCI_18_S	0.367	0.424	0.447	0.424	0.447	0.761	0.761	0.817	0.761	0.817	0.836	0.836	0.900	0.836	0.900	ns
HSTL_I_12_F	0.322	0.378	0.399	0.378	0.399	0.410	0.423	0.443	0.423	0.443	0.514	0.553	0.582	0.553	0.582	ns
HSTL_I_12_M	0.322	0.378	0.399	0.378	0.399	0.551	0.551	0.582	0.551	0.582	0.632	0.642	0.679	0.642	0.679	ns
HSTL_I_12_S	0.322	0.378	0.399	0.378	0.399	0.750	0.750	0.799	0.750	0.799	0.813	0.813	0.868	0.813	0.868	ns
HSTL_I_18_F	0.258	0.322	0.339	0.322	0.339	0.439	0.456	0.474	0.456	0.474	0.549	0.576	0.606	0.576	0.606	ns
HSTL_I_18_M	0.258	0.322	0.339	0.322	0.339	0.562	0.569	0.602	0.569	0.602	0.637	0.653	0.692	0.653	0.692	ns
HSTL_I_18_S	0.258	0.322	0.339	0.322	0.339	0.781	0.781	0.833	0.781	0.833	0.816	0.816	0.871	0.816	0.871	ns
HSTL_I_DCI_12_F	0.322	0.378	0.399	0.378	0.399	0.393	0.406	0.429	0.406	0.429	0.502	0.534	0.564	0.534	0.564	ns
HSTL_I_DCI_12_M	0.322	0.378	0.399	0.378	0.399	0.551	0.556	0.586	0.556	0.586	0.644	0.654	0.694	0.654	0.694	ns
HSTL_I_DCI_12_S	0.322	0.378	0.399	0.378	0.399	0.754	0.754	0.803	0.754	0.803	0.842	0.842	0.907	0.842	0.907	ns
HSTL_I_DCI_18_F	0.258	0.321	0.339	0.321	0.339	0.422	0.445	0.461	0.445	0.461	0.509	0.566	0.595	0.566	0.595	ns
HSTL_I_DCI_18_M	0.258	0.321	0.339	0.321	0.339	0.551	0.554	0.585	0.554	0.585	0.634	0.643	0.684	0.643	0.684	ns
HSTL_I_DCI_18_S	0.258	0.321	0.339	0.321	0.339	0.761	0.761	0.817	0.761	0.817	0.836	0.836	0.900	0.836	0.900	ns
HSTL_I_DCI_F	0.288	0.393	0.415	0.393	0.415	0.407	0.431	0.445	0.431	0.445	0.517	0.555	0.575	0.555	0.575	ns
HSTL_I_DCI_M	0.288	0.393	0.415	0.393	0.415	0.548	0.552	0.581	0.552	0.581	0.635	0.644	0.684	0.644	0.684	ns
HSTL_I_DCI_S	0.288	0.393	0.415	0.393	0.415	0.766	0.766	0.821	0.766	0.821	0.847	0.847	0.912	0.847	0.912	ns
HSTL_I_F	0.322	0.378	0.399	0.378	0.399	0.409	0.423	0.443	0.423	0.443	0.514	0.549	0.581	0.549	0.581	ns
HSTL_I_M	0.322	0.378	0.399	0.378	0.399	0.548	0.554	0.585	0.554	0.585	0.624	0.640	0.677	0.640	0.677	ns
HSTL_I_S	0.322	0.378	0.399	0.378	0.399	0.766	0.766	0.816	0.766	0.816	0.811	0.811	0.866	0.811	0.866	ns
HSUL_12_DCI_F	0.319	0.378	0.399	0.378	0.399	0.411	0.425	0.443	0.425	0.443	0.520	0.558	0.586	0.558	0.586	ns
HSUL_12_DCI_M	0.319	0.378	0.399	0.378	0.399	0.551	0.556	0.586	0.556	0.586	0.644	0.654	0.694	0.654	0.694	ns
HSUL_12_DCI_S	0.319	0.378	0.399	0.378	0.399	0.736	0.736	0.784	0.736	0.784	0.821	0.821	0.886	0.821	0.886	ns
HSUL_12_F	0.305	0.378	0.399	0.378	0.399	0.394	0.412	0.430	0.412	0.430	0.494	0.538	0.566	0.538	0.566	ns
HSUL_12_M	0.305	0.378	0.399	0.378	0.399	0.551	0.551	0.582	0.551	0.582	0.632	0.642	0.679	0.642	0.679	ns
HSUL_12_S	0.305	0.378	0.399	0.378	0.399	0.750	0.750	0.799	0.750	0.799	0.813	0.813	0.868	0.813	0.868	ns

Table 76: **IOB High Performance (HP) Switching Characteristics** *(cont'd)*

I/O Standards	$T_{INBUF_DELAY_PAD_I}$					$T_{OUTBUF_DELAY_O_PAD}$					$T_{OUTBUF_DELAY_TD_PAD}$					Units
	0.90V	0.85V		0.72V		0.90V	0.85V		0.72V		0.90V	0.85V		0.72V		
	-3	-2	-1	-2	-1	-3	-2	-1	-2	-1	-3	-2	-1	-2	-1	
LVCMOS12_F_2	0.443	0.512	0.555	0.512	0.555	0.657	0.672	0.692	0.672	0.692	0.862	0.898	0.922	0.898	0.922	ns
LVCMOS12_F_4	0.443	0.512	0.555	0.512	0.555	0.486	0.504	0.521	0.504	0.521	0.645	0.664	0.693	0.664	0.693	ns
LVCMOS12_F_6	0.443	0.512	0.555	0.512	0.555	0.469	0.485	0.507	0.485	0.507	0.585	0.634	0.669	0.634	0.669	ns
LVCMOS12_F_8	0.443	0.512	0.555	0.512	0.555	0.457	0.465	0.489	0.465	0.489	0.592	0.611	0.666	0.611	0.666	ns
LVCMOS12_M_2	0.443	0.512	0.555	0.512	0.555	0.687	0.708	0.727	0.708	0.727	0.889	0.916	0.945	0.916	0.945	ns
LVCMOS12_M_4	0.443	0.512	0.555	0.512	0.555	0.533	0.550	0.573	0.550	0.573	0.629	0.664	0.690	0.664	0.690	ns
LVCMOS12_M_6	0.443	0.512	0.555	0.512	0.555	0.520	0.527	0.554	0.527	0.554	0.608	0.622	0.652	0.622	0.652	ns
LVCMOS12_M_8	0.443	0.512	0.555	0.512	0.555	0.532	0.540	0.571	0.540	0.571	0.606	0.614	0.649	0.614	0.649	ns
LVCMOS12_S_2	0.443	0.512	0.555	0.512	0.555	0.767	0.767	0.803	0.767	0.803	0.981	0.990	1.024	0.990	1.024	ns
LVCMOS12_S_4	0.443	0.512	0.555	0.512	0.555	0.666	0.666	0.704	0.666	0.704	0.803	0.803	0.848	0.803	0.848	ns
LVCMOS12_S_6	0.443	0.512	0.555	0.512	0.555	0.657	0.657	0.695	0.657	0.695	0.732	0.732	0.774	0.732	0.774	ns
LVCMOS12_S_8	0.443	0.512	0.555	0.512	0.555	0.708	0.708	0.761	0.708	0.761	0.745	0.745	0.790	0.745	0.790	ns
LVCMOS15_F_12	0.368	0.414	0.445	0.414	0.445	0.485	0.500	0.522	0.500	0.522	0.584	0.647	0.682	0.647	0.682	ns
LVCMOS15_F_2	0.368	0.414	0.445	0.414	0.445	0.686	0.702	0.722	0.702	0.722	0.893	0.919	0.940	0.919	0.940	ns
LVCMOS15_F_4	0.368	0.414	0.445	0.414	0.445	0.567	0.579	0.601	0.579	0.601	0.727	0.755	0.781	0.755	0.781	ns
LVCMOS15_F_6	0.368	0.414	0.445	0.414	0.445	0.533	0.547	0.569	0.547	0.569	0.684	0.711	0.742	0.711	0.742	ns
LVCMOS15_F_8	0.368	0.414	0.445	0.414	0.445	0.500	0.518	0.538	0.518	0.538	0.635	0.686	0.703	0.686	0.703	ns
LVCMOS15_M_12	0.368	0.414	0.445	0.414	0.445	0.607	0.607	0.644	0.607	0.644	0.637	0.637	0.676	0.637	0.676	ns
LVCMOS15_M_2	0.368	0.414	0.445	0.414	0.445	0.736	0.741	0.770	0.741	0.770	0.929	0.938	0.962	0.938	0.962	ns
LVCMOS15_M_4	0.368	0.414	0.445	0.414	0.445	0.610	0.625	0.651	0.625	0.651	0.733	0.754	0.786	0.754	0.786	ns
LVCMOS15_M_6	0.368	0.414	0.445	0.414	0.445	0.564	0.576	0.604	0.576	0.604	0.655	0.674	0.710	0.674	0.710	ns
LVCMOS15_M_8	0.368	0.414	0.445	0.414	0.445	0.565	0.568	0.601	0.568	0.601	0.634	0.639	0.681	0.639	0.681	ns
LVCMOS15_S_12	0.368	0.414	0.445	0.414	0.445	0.788	0.788	0.855	0.788	0.855	0.695	0.695	0.733	0.695	0.733	ns
LVCMOS15_S_2	0.368	0.414	0.445	0.414	0.445	0.829	0.829	0.864	0.829	0.864	1.038	1.039	1.079	1.039	1.079	ns
LVCMOS15_S_4	0.368	0.414	0.445	0.414	0.445	0.687	0.687	0.725	0.687	0.725	0.813	0.813	0.851	0.813	0.851	ns
LVCMOS15_S_6	0.368	0.414	0.445	0.414	0.445	0.671	0.671	0.710	0.671	0.710	0.726	0.726	0.763	0.726	0.763	ns
LVCMOS15_S_8	0.368	0.414	0.445	0.414	0.445	0.704	0.704	0.755	0.704	0.755	0.721	0.721	0.758	0.721	0.758	ns
LVCMOS18_F_12	0.352	0.418	0.445	0.418	0.445	0.564	0.573	0.601	0.573	0.601	0.696	0.731	0.769	0.731	0.769	ns
LVCMOS18_F_2	0.352	0.418	0.445	0.418	0.445	0.723	0.739	0.760	0.739	0.760	0.918	0.945	0.971	0.945	0.971	ns
LVCMOS18_F_4	0.352	0.418	0.445	0.418	0.445	0.598	0.609	0.630	0.609	0.630	0.749	0.778	0.802	0.778	0.802	ns
LVCMOS18_F_6	0.352	0.418	0.445	0.418	0.445	0.598	0.603	0.633	0.603	0.633	0.781	0.781	0.808	0.781	0.808	ns
LVCMOS18_F_8	0.352	0.418	0.445	0.418	0.445	0.567	0.573	0.600	0.573	0.600	0.712	0.733	0.767	0.733	0.767	ns
LVCMOS18_M_12	0.352	0.418	0.445	0.418	0.445	0.640	0.640	0.678	0.640	0.678	0.670	0.670	0.709	0.670	0.709	ns
LVCMOS18_M_2	0.352	0.418	0.445	0.418	0.445	0.785	0.798	0.822	0.798	0.822	0.986	0.991	1.016	0.991	1.016	ns
LVCMOS18_M_4	0.352	0.418	0.445	0.418	0.445	0.658	0.664	0.693	0.664	0.693	0.786	0.798	0.836	0.798	0.836	ns
LVCMOS18_M_6	0.352	0.418	0.445	0.418	0.445	0.625	0.629	0.663	0.629	0.663	0.727	0.735	0.775	0.735	0.775	ns
LVCMOS18_M_8	0.352	0.418	0.445	0.418	0.445	0.626	0.626	0.661	0.626	0.661	0.705	0.705	0.746	0.705	0.746	ns
LVCMOS18_S_12	0.352	0.418	0.445	0.418	0.445	0.795	0.795	0.861	0.795	0.861	0.683	0.683	0.721	0.683	0.721	ns
LVCMOS18_S_2	0.352	0.418	0.445	0.418	0.445	0.861	0.862	0.897	0.862	0.897	1.061	1.076	1.098	1.076	1.098	ns

Table 76: **IOB High Performance (HP) Switching Characteristics** *(cont'd)*

I/O Standards	$T_{INBUF_DELAY_PAD_I}$					$T_{OUTBUF_DELAY_O_PAD}$					$T_{OUTBUF_DELAY_TD_PAD}$					Units
	0.90V	0.85V		0.72V		0.90V	0.85V		0.72V		0.90V	0.85V		0.72V		
	-3	-2	-1	-2	-1	-3	-2	-1	-2	-1	-3	-2	-1	-2	-1	
LVCMOS18_S_4	0.352	0.418	0.445	0.418	0.445	0.716	0.716	0.758	0.716	0.758	0.829	0.829	0.872	0.829	0.872	ns
LVCMOS18_S_6	0.352	0.418	0.445	0.418	0.445	0.682	0.682	0.724	0.682	0.724	0.724	0.724	0.762	0.724	0.762	ns
LVCMOS18_S_8	0.352	0.418	0.445	0.418	0.445	0.707	0.707	0.760	0.707	0.760	0.709	0.709	0.745	0.709	0.745	ns
LVDCI_15_F	0.369	0.425	0.462	0.425	0.462	0.407	0.426	0.443	0.426	0.443	0.514	0.548	0.581	0.548	0.581	ns
LVDCI_15_M	0.369	0.425	0.462	0.425	0.462	0.549	0.553	0.582	0.553	0.582	0.632	0.645	0.685	0.645	0.685	ns
LVDCI_15_S	0.369	0.425	0.462	0.425	0.462	0.749	0.749	0.803	0.749	0.803	0.821	0.821	0.890	0.821	0.890	ns
LVDCI_18_F	0.367	0.414	0.447	0.414	0.447	0.422	0.441	0.459	0.441	0.459	0.541	0.560	0.589	0.560	0.589	ns
LVDCI_18_M	0.367	0.414	0.447	0.414	0.447	0.546	0.554	0.585	0.554	0.585	0.622	0.644	0.683	0.644	0.683	ns
LVDCI_18_S	0.367	0.414	0.447	0.414	0.447	0.760	0.760	0.818	0.760	0.818	0.837	0.837	0.899	0.837	0.899	ns
LVDS	0.508	0.539	0.620	0.539	0.620	0.626	0.626	0.662	0.626	0.662	960.447					ns
MIPI_DPHY_DCI_HS	0.305	0.386	0.415	0.386	0.415	0.489	0.502	0.522	0.502	0.522	N/A	N/A	N/A	N/A	N/A	ns
MIPI_DPHY_DCI_LP	8.438	8.438	8.792	8.438	8.792	0.895	0.914	0.937	0.914	0.937	N/A	N/A	N/A	N/A	N/A	ns
POD10_DCI_F	0.336	0.408	0.430	0.408	0.430	0.407	0.425	0.444	0.425	0.444	0.512	0.555	0.584	0.555	0.584	ns
POD10_DCI_M	0.336	0.408	0.430	0.408	0.430	0.533	0.542	0.571	0.542	0.571	0.618	0.640	0.681	0.640	0.681	ns
POD10_DCI_S	0.336	0.408	0.430	0.408	0.430	0.724	0.754	0.815	0.754	0.815	0.815	0.850	0.917	0.850	0.917	ns
POD10_F	0.336	0.407	0.430	0.407	0.430	0.425	0.438	0.459	0.438	0.459	0.531	0.569	0.601	0.569	0.601	ns
POD10_M	0.336	0.407	0.430	0.407	0.430	0.519	0.538	0.568	0.538	0.568	0.589	0.630	0.667	0.630	0.667	ns
POD10_S	0.336	0.407	0.430	0.407	0.430	0.752	0.766	0.821	0.766	0.821	0.821	0.836	0.894	0.836	0.894	ns
POD12_DCI_F	0.336	0.409	0.431	0.409	0.431	0.411	0.425	0.443	0.425	0.443	0.519	0.558	0.586	0.558	0.586	ns
POD12_DCI_M	0.336	0.409	0.431	0.409	0.431	0.516	0.543	0.572	0.543	0.572	0.602	0.638	0.678	0.638	0.678	ns
POD12_DCI_S	0.336	0.409	0.431	0.409	0.431	0.740	0.772	0.822	0.772	0.822	0.833	0.862	0.929	0.862	0.929	ns
POD12_F	0.336	0.409	0.431	0.409	0.431	0.438	0.455	0.476	0.455	0.476	0.549	0.595	0.626	0.595	0.626	ns
POD12_M	0.336	0.409	0.431	0.409	0.431	0.551	0.551	0.582	0.551	0.582	0.632	0.641	0.679	0.641	0.679	ns
POD12_S	0.336	0.409	0.431	0.409	0.431	0.749	0.767	0.817	0.767	0.817	0.818	0.832	0.889	0.832	0.889	ns
SLVS_400_18	0.492	0.539	0.620	0.539	0.620	N/A	N/A	N/A	N/A	N/A	N/A	N/A	N/A	N/A	N/A	ns
SSTL12_DCI_F	0.331	0.381	0.399	0.381	0.399	0.411	0.425	0.443	0.425	0.443	0.520	0.558	0.586	0.558	0.586	ns
SSTL12_DCI_M	0.331	0.381	0.399	0.381	0.399	0.549	0.557	0.587	0.557	0.587	0.643	0.654	0.694	0.654	0.694	ns
SSTL12_DCI_S	0.331	0.381	0.399	0.381	0.399	0.754	0.754	0.803	0.754	0.803	0.842	0.842	0.908	0.842	0.908	ns
SSTL12_F	0.320	0.403	0.403	0.403	0.403	0.394	0.412	0.430	0.412	0.430	0.494	0.538	0.566	0.538	0.566	ns
SSTL12_M	0.320	0.403	0.403	0.403	0.403	0.550	0.553	0.584	0.553	0.584	0.630	0.641	0.676	0.641	0.676	ns
SSTL12_S	0.320	0.403	0.403	0.403	0.403	0.758	0.758	0.808	0.758	0.808	0.823	0.823	0.879	0.823	0.879	ns
SSTL135_DCI_F	0.341	0.366	0.399	0.366	0.399	0.392	0.411	0.428	0.411	0.428	0.494	0.537	0.565	0.537	0.565	ns
SSTL135_DCI_M	0.341	0.366	0.399	0.366	0.399	0.551	0.551	0.582	0.551	0.582	0.643	0.645	0.685	0.645	0.685	ns
SSTL135_DCI_S	0.341	0.366	0.399	0.366	0.399	0.746	0.746	0.799	0.746	0.799	0.829	0.829	0.893	0.829	0.893	ns
SSTL135_F	0.321	0.378	0.399	0.378	0.399	0.393	0.408	0.428	0.408	0.428	0.491	0.528	0.561	0.528	0.561	ns
SSTL135_M	0.321	0.378	0.399	0.378	0.399	0.548	0.555	0.585	0.555	0.585	0.621	0.641	0.679	0.641	0.679	ns
SSTL135_S	0.321	0.378	0.399	0.378	0.399	0.772	0.772	0.823	0.772	0.823	0.827	0.827	0.878	0.827	0.878	ns
SSTL15_DCI_F	0.319	0.402	0.417	0.402	0.417	0.394	0.412	0.429	0.412	0.429	0.497	0.531	0.563	0.531	0.563	ns
SSTL15_DCI_M	0.319	0.402	0.417	0.402	0.417	0.549	0.553	0.583	0.553	0.583	0.632	0.645	0.685	0.645	0.685	ns

Table 76: **IOB High Performance (HP) Switching Characteristics** *(cont'd)*

I/O Standards	$T_{INBUF_DELAY_PAD_I}$					$T_{OUTBUF_DELAY_O_PAD}$					$T_{OUTBUF_DELAY_TD_PAD}$					Units
	0.90V	0.85V		0.72V		0.90V	0.85V		0.72V		0.90V	0.85V		0.72V		
	-3	-2	-1	-2	-1	-3	-2	-1	-2	-1	-3	-2	-1	-2	-1	
SSTL15_DCI_S	0.319	0.402	0.417	0.402	0.417	0.768	0.768	0.822	0.768	0.822	0.847	0.847	0.912	0.847	0.912	ns
SSTL15_F	0.320	0.371	0.400	0.371	0.400	0.393	0.408	0.428	0.408	0.428	0.494	0.530	0.556	0.530	0.556	ns
SSTL15_M	0.320	0.371	0.400	0.371	0.400	0.547	0.554	0.585	0.554	0.585	0.624	0.639	0.677	0.639	0.677	ns
SSTL15_S	0.320	0.371	0.400	0.371	0.400	0.767	0.767	0.817	0.767	0.817	0.813	0.813	0.867	0.813	0.867	ns
SSTL18_I_DCI_F	0.256	0.329	0.336	0.329	0.336	0.422	0.445	0.461	0.445	0.461	0.540	0.566	0.595	0.566	0.595	ns
SSTL18_I_DCI_M	0.256	0.329	0.336	0.329	0.336	0.552	0.554	0.585	0.554	0.585	0.629	0.644	0.683	0.644	0.683	ns
SSTL18_I_DCI_S	0.256	0.329	0.336	0.329	0.336	0.762	0.762	0.818	0.762	0.818	0.837	0.837	0.899	0.837	0.899	ns
SSTL18_I_F	0.259	0.316	0.337	0.316	0.337	0.439	0.454	0.476	0.454	0.476	0.549	0.578	0.608	0.578	0.608	ns
SSTL18_I_M	0.259	0.316	0.337	0.316	0.337	0.567	0.571	0.603	0.571	0.603	0.535	0.652	0.692	0.652	0.692	ns
SSTL18_I_S	0.259	0.316	0.337	0.316	0.337	0.782	0.782	0.835	0.782	0.835	0.816	0.816	0.870	0.816	0.870	ns
SUB_LVDS	0.508	0.539	0.620	0.539	0.620	0.658	0.660	0.692	0.660	0.692	907.4	969.863				ns

IOB 3-state Output Switching Characteristics

Table 77 specifies the values of $T_{OUTBUF_DELAY_TE_PAD}$ and $T_{INBUF_DELAY_IBUFDIS_O}$.

- $T_{OUTBUF_DELAY_TE_PAD}$ is the delay from the T pin to the IOB pad through the output buffer of an IOB pad, when 3-state is enabled (i.e., a high impedance state).
- $T_{INBUF_DELAY_IBUFDIS_O}$ is the IOB delay from IBUFDISABLE to O output.
- In HP I/O banks, the internal DCI termination turn-off time is always faster than $T_{OUTBUF_DELAY_TE_PAD}$ when the DCITERMDISABLE pin is used.
- In HD I/O banks, the internal IN_TERM termination turn-off time is always faster than $T_{OUTBUF_DELAY_TE_PAD}$ when the INTERMDISABLE pin is used.

Table 77: **IOB 3-state Output Switching Characteristics**

Symbol	Description	Speed Grade and V_{CCINT} Operating Voltages					Units
		0.90V	0.85V		0.72V		
		-3	-2	-1	-2	-1	
$T_{OUTBUF_DELAY_TE_PAD}$	T input to pad high-impedance for HD I/O banks	6.167	6.318	6.369	6.699	6.752	ns
	T input to pad high-impedance for HP I/O banks	5.330	5.330	5.341	5.330	5.341	ns
$T_{INBUF_DELAY_IBUFDIS_O}$	IBUF turn-on time from IBUFDISABLE to O output for HD I/O banks	2.266	2.266	2.430	2.266	2.430	ns
	IBUF turn-on time from IBUFDISABLE to O output for HP I/O banks	0.873	0.936	1.037	0.936	1.037	ns

Input Delay Measurement Methodology

The following table shows the test setup parameters used for measuring input delay.

Table 78: **Input Delay Measurement Methodology**

Description	I/O Standard Attribute	V_L [1, 2]	V_H [1, 2]	V_{MEAS} [1, 4]	V_{REF} [1, 3, 5]
LVCMOS, 1.2V	LVCMOS12	0.1	1.1	0.6	–
LVCMOS, LVDCI, HSLVDCI, 1.5V	LVCMOS15, LVDCI_15, HSLVDCI_15	0.1	1.4	0.75	–
LVCMOS, LVDCI, HSLVDCI, 1.8V	LVCMOS18, LVDCI_18, HSLVDCI_18	0.1	1.7	0.9	–
LVCMOS, 2.5V	LVCMOS25	0.1	2.4	1.25	–
LVCMOS, 3.3V	LVCMOS33	0.1	3.2	1.65	–
LVTTL, 3.3V	LVTTL	0.1	3.2	1.65	–
HSTL (high-speed transceiver logic), class I, 1.2V	HSTL_I_12	V_{REF} – 0.25	V_{REF} + 0.25	V_{REF}	0.6
HSTL, class I, 1.5V	HSTL_I	V_{REF} – 0.325	V_{REF} + 0.325	V_{REF}	0.75
HSTL, class I, 1.8V	HSTL_I_18	V_{REF} – 0.4	V_{REF} + 0.4	V_{REF}	0.9
HSUL (high-speed unterminated logic), 1.2V	HSUL_12	V_{REF} – 0.25	V_{REF} + 0.25	V_{REF}	0.6
SSTL12 (stub series terminated logic), 1.2V	SSTL12	V_{REF} – 0.25	V_{REF} + 0.25	V_{REF}	0.6
SSTL135 and SSTL135 class II, 1.35V	SSTL135, SSTL135_II	V_{REF} – 0.2875	V_{REF} + 0.2875	V_{REF}	0.675
SSTL15 and SSTL15 class II, 1.5V	SSTL15, SSTL15_II	V_{REF} – 0.325	V_{REF} + 0.325	V_{REF}	0.75
SSTL18, class I and II, 1.8V	SSTL18_I, SSTL18_II	V_{REF} – 0.4	V_{REF} + 0.4	V_{REF}	0.9
POD10, 1.0V	POD10	V_{REF} – 0.2	V_{REF} + 0.2	V_{REF}	0.7
POD12, 1.2V	POD12	V_{REF} – 0.24	V_{REF} + 0.24	V_{REF}	0.84
DIFF_HSTL, class I, 1.2V	DIFF_HSTL_I_12	0.6 – 0.25	0.6 + 0.25	0[6]	–
DIFF_HSTL, class I, 1.5V	DIFF_HSTL_I	0.75 – 0.325	0.75 + 0.325	0[6]	–
DIFF_HSTL, class I, 1.8V	DIFF_HSTL_I_18	0.9 – 0.4	0.9 + 0.4	0[6]	–
DIFF_HSUL, 1.2V	DIFF_HSUL_12	0.6 – 0.25	0.6 + 0.25	0[6]	–
DIFF_SSTL, 1.2V	DIFF_SSTL12	0.6 – 0.25	0.6 + 0.25	0[6]	–
DIFF_SSTL135 and DIFF_SSTL135 class II, 1.35V	DIFF_SSTL135, DIFF_SSTL135_II	0.675 – 0.2875	0.675 + 0.2875	0[6]	–
DIFF_SSTL15 and DIFF_SSTL15 class II, 1.5V	DIFF_SSTL15, DIFF_SSTL15_II	0.75 – 0.325	0.75 + 0.325	0[6]	–
DIFF_SSTL18_I, DIFF_SSTL18_II, 1.8V	DIFF_SSTL18_I, DIFF_SSTL18_II	0.9 – 0.4	0.9 + 0.4	0[6]	–
DIFF_POD10, 1.0V	DIFF_POD10	0.5 – 0.2	0.5 + 0.2	0[6]	–
DIFF_POD12, 1.2V	DIFF_POD12	0.6 – 0.25	0.6 + 0.25	0[6]	–
LVDS (low-voltage differential signaling), 1.8V	LVDS	0.9 – 0.125	0.9 + 0.125	0[6]	–
LVDS_25, 2.5V	LVDS_25	1.25 – 0.125	1.25 + 0.125	0[6]	–
SUB_LVDS, 1.8V	SUB_LVDS	0.9 – 0.125	0.9 + 0.125	0[6]	–
SLVS, 1.8V	SLVS_400_18	0.9 – 0.125	0.9 + 0.125	0[6]	–
SLVS, 2.5V	SLVS_400_25	1.25 – 0.125	1.25 + 0.125	0[6]	–
LVPECL, 2.5V	LVPECL	1.25 – 0.125	1.25 + 0.125	0[6]	–
MIPI D-PHY (high speed) 1.2V	MIPI_DPHY_DCI_HS	0.2 – 0.125	0.2 + 0.125	0[6]	–

Table 78: **Input Delay Measurement Methodology** *(cont'd)*

Description	I/O Standard Attribute	V_L [1, 2]	V_H [1, 2]	V_{MEAS} [1, 4]	V_{REF} [1, 3, 5]
MIPI D-PHY (low power) 1.2V	MIPI_DPHY_DCI_LP	0.715 – 0.2	0.715 + 0.2	0[6]	–

Notes:

1. The input delay measurement methodology parameters for LVDCI/HSLVDCI are the same for LVCMOS standards of the same voltage. Parameters for all other DCI standards are the same for the corresponding non-DCI standards.
2. Input waveform switches between V_L and V_H.
3. Measurements are made at typical, minimum, and maximum V_{REF} values. Reported delays reflect worst case of these measurements. V_{REF} values listed are typical.
4. Input voltage level from which measurement starts.
5. This is an input voltage reference that bears no relation to the V_{REF}/V_{MEAS} parameters found in IBIS models and/or noted in Figure 1.
6. The value given is the differential input voltage.

Output Delay Measurement Methodology

Output delays are measured with short output traces. Standard termination was used for all testing. The propagation delay of the trace is characterized separately and subtracted from the final measurement, and is therefore not included in the generalized test setups shown in Figure 1 and Figure 2.

Figure 1: **Single-Ended Test Setup**

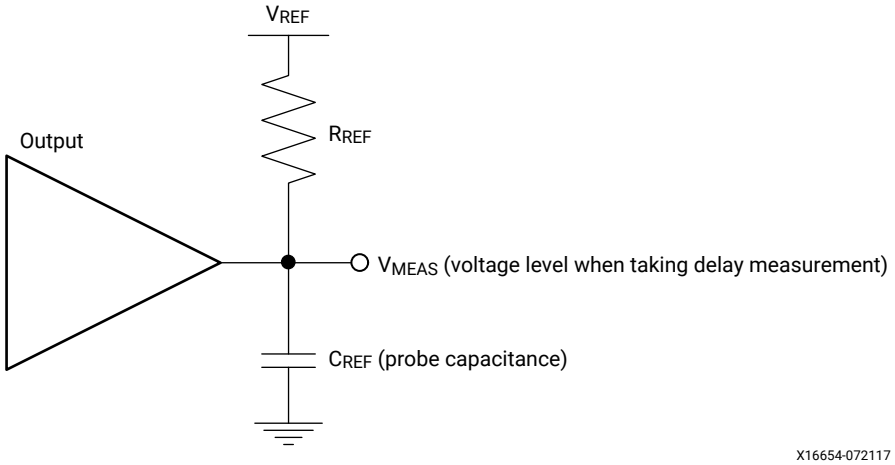

Figure 2: **Differential Test Setup**

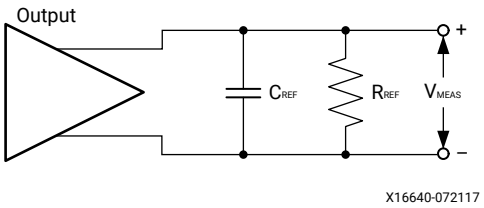

Parameters V_{REF}, R_{REF}, C_{REF}, and V_{MEAS} fully describe the test conditions for each I/O standard. The most accurate prediction of propagation delay in any given application can be obtained through IBIS simulation, using this method:

1. Simulate the output driver of choice into the generalized test setup using values from Table 79.

2. Record the time to V_{MEAS}.
3. Simulate the output driver of choice into the actual PCB trace and load using the appropriate IBIS model or capacitance value to represent the load.
4. Record the time to V_{MEAS}.
5. Compare the results of step 2 and step 4. The increase or decrease in delay yields the actual propagation delay of the PCB trace.

Table 79: **Output Delay Measurement Methodology**

Description	I/O Standard Attribute	R_{REF} (Ω)	C_{REF}[1] (pF)	V_{MEAS} (V)	V_{REF} (V)
LVCMOS, 1.2V	LVCMOS12	1M	0	0.6	0
LVCMOS, 1.5V	LVCMOS15	1M	0	0.75	0
LVCMOS, 1.8V	LVCMOS18	1M	0	0.9	0
LVCMOS, 2.5V	LVCMOS25	1M	0	1.25	0
LVCMOS, 3.3V	LVCMOS33	1M	0	1.65	0
LVTTL, 3.3V	LVTTL	1M	0	1.65	0
LVDCI, HSLVDCI, 1.5V	LVDCI_15, HSLVDCI_15	50	0	V_{REF}	0.75
LVDCI, HSLVDCI, 1.8V	LVDCI_15, HSLVDCI_18	50	0	V_{REF}	0.9
HSTL (high-speed transceiver logic), class I, 1.2V	HSTL_I_12	50	0	V_{REF}	0.6
HSTL, class I, 1.5V	HSTL_I	50	0	V_{REF}	0.75
HSTL, class I, 1.8V	HSTL_I_18	50	0	V_{REF}	0.9
HSUL (high-speed unterminated logic), 1.2V	HSUL_12	50	0	V_{REF}	0.6
SSTL12 (stub series terminated logic), 1.2V	SSTL12	50	0	V_{REF}	0.6
SSTL135 and SSTL135 class II, 1.35V	SSTL135, SSTL135_II	50	0	V_{REF}	0.675
SSTL15 and SSTL15 class II, 1.5V	SSTL15, SSTL15_II	50	0	V_{REF}	0.75
SSTL18, class I and class II, 1.8V	SSTL18_I, SSTL18_II	50	0	V_{REF}	0.9
POD10, 1.0V	POD10	50	0	V_{REF}	1.0
POD12, 1.2V	POD12	50	0	V_{REF}	1.2
DIFF_HSTL, class I, 1.2V	DIFF_HSTL_I_12	50	0	V_{REF}	0.6
DIFF_HSTL, class I, 1.5V	DIFF_HSTL_I	50	0	V_{REF}	0.75
DIFF_HSTL, class I, 1.8V	DIFF_HSTL_I_18	50	0	V_{REF}	0.9
DIFF_HSUL, 1.2V	DIFF_HSUL_12	50	0	V_{REF}	0.6
DIFF_SSTL12, 1.2V	DIFF_SSTL12	50	0	V_{REF}	0.6
DIFF_SSTL135 and DIFF_SSTL135 class II, 1.35V	DIFF_SSTL135, DIFF_SSTL135_II	50	0	V_{REF}	0.675
DIFF_SSTL15 and DIFF_SSTL15 class II, 1.5V	DIFF_SSTL15, DIFF_SSTL15_II	50	0	V_{REF}	0.75
DIFF_SSTL18, class I and II, 1.8V	DIFF_SSTL18_I, DIFF_SSTL18_II	50	0	V_{REF}	0.9
DIFF_POD10, 1.0V	DIFF_POD10	50	0	V_{REF}	1.0
DIFF_POD12, 1.2V	DIFF_POD12	50	0	V_{REF}	1.2
LVDS (low-voltage differential signaling), 1.8V	LVDS	100	0	0[2]	0
SUB_LVDS, 1.8V	SUB_LVDS	100	0	0[2]	0
MIPI D-PHY (high speed) 1.2V	MIPI_DPHY_DCI_HS	100	0	0[2]	0

Table 79: **Output Delay Measurement Methodology** *(cont'd)*

Description	I/O Standard Attribute	R_{REF} (Ω)	C_{REF}[1] (pF)	V_{MEAS} (V)	V_{REF} (V)
MIPI D-PHY (low power) 1.2V	MIPI_DPHY_DCI_LP	1M	0	0.6	0

Notes:
1. C_{REF} is the capacitance of the probe, nominally 0 pF.
2. The value given is the differential output voltage.

Block RAM and FIFO Switching Characteristics

Table 80: **Block RAM and FIFO Switching Characteristics**

Symbol	Description	Speed Grade and V_{CCINT} Operating Voltages					Units
		0.90V	0.85V		0.72V		
		-3	-2	-1	-2	-1	
Maximum Frequency							
$F_{MAX_WF_NC}$	Block RAM (WRITE_FIRST and NO_CHANGE modes)	825	738	645	585	516	MHz
F_{MAX_RF}	Block RAM (READ_FIRST mode)	718	637	575	510	460	MHz
F_{MAX_FIFO}	FIFO in all modes without ECC	825	738	645	585	516	MHz
F_{MAX_ECC}	Block RAM and FIFO in ECC configuration without PIPELINE	718	637	575	510	460	MHz
	Block RAM and FIFO in ECC configuration with PIPELINE and Block RAM in WRITE_FIRST or NO_CHANGE mode	825	738	645	585	516	MHz
T_{PW}[1]	Minimum pulse width	495	542	543	577	578	ps
Block RAM and FIFO Clock-to-Out Delays							
T_{RCKO_DO}	Clock CLK to DOUT output (without output register)	0.91	1.02	1.11	1.46	1.53	ns, Max
$T_{RCKO_DO_REG}$	Clock CLK to DOUT output (with output register)	0.27	0.29	0.30	0.42	0.44	ns, Max

Notes:
1. The MMCM and PLL DUTY_CYCLE attribute should be set to 50% to meet the pulse-width requirements at the higher frequencies.

UltraRAM Switching Characteristics

The *UltraScale Architecture and Product Data Sheet: Overview* (DS890) lists the Zynq UltraScale+ MPSoCs that include this memory.

Table 81: **UltraRAM Switching Characteristics**

Symbol	Description	Speed Grade and V_{CCINT} Operating Voltages					Units
		0.90V	0.85V		0.72V		
		-3	-2	-1	-2	-1	
Maximum Frequency							
F_{MAX}	UltraRAM maximum frequency with OREG_B = True	650	600	575	500	481	MHz
$F_{MAX_ECC_NOPIPELINE}$	UltraRAM maximum frequency with OREG_B = False and EN_ECC_RD_B = True	435	400	386	312	303	MHz
$F_{MAX_NOPIPELINE}$	UltraRAM maximum frequency with OREG_B = False and EN_ECC_RD_B = False	528	500	478	404	389	MHz
T_{PW}[1]	Minimum pulse width	650	700	730	800	832	ps
T_{RSTPW}	Asynchronous reset minimum pulse width. One cycle required	1 clock cycle					

Notes:

1. The MMCM and PLL DUTY_CYCLE attribute should be set to 50% to meet the pulse-width requirements at the higher frequencies.

Input/Output Delay Switching Characteristics

Table 82: **Input/Output Delay Switching Characteristics**

Symbol	Description	Speed Grade and V_{CCINT} Operating Voltages					Units
		0.90V	0.85V		0.72V		
		-3	-2	-1	-2	-1	
F_{REFCLK}	Reference clock frequency for IDELAYCTRL (component mode)	300 to 800					MHz
	Reference clock frequency when using BITSLICE_CONTROL with REFCLK (in native mode (for RX_BITSLICE only))	300 to 800					MHz
	Reference clock frequency for BITSLICE_CONTROL with PLL_CLK (in native mode)[1]	300 to 2666.67	300 to 2666.67	300 to 2400	300 to 2400	300 to 2133	MHz
T_{MINPER_CLK}	Minimum period for IODELAY clock	3.195	3.195	3.195	3.195	3.195	ns
T_{MINPER_RST}	Minimum reset pulse width	52.00					ns
$T_{IDELAY_RESOLUTION}$/ $T_{ODELAY_RESOLUTION}$	IDELAY/ODELAY chain resolution	2.1 to 12					ps

Notes:

1. PLL settings could restrict the minimum allowable data rate. For example, when using a PLL with CLKOUTPHY_MODE = VCO_HALF, the minimum frequency is PLL_F_{VCOMIN}/2.

DSP48 Slice Switching Characteristics

Table 83: **DSP48 Slice Switching Characteristics**

Symbol	Description	Speed Grade and V_{CCINT} Operating Voltages					Units
		0.90V	0.85V		0.72V[1]		
		-3	-2	-1	-2	-1	
Maximum Frequency							
F_{MAX}	With all registers used	891	775	645	644	600	MHz
F_{MAX_PATDET}	With pattern detector	794	687	571	562	524	MHz
$F_{MAX_MULT_NOMREG}$	Two register multiply without MREG	635	544	456	440	413	MHz
$F_{MAX_MULT_NOMREG_PATDET}$	Two register multiply without MREG with pattern detect	577	492	410	395	371	MHz
$F_{MAX_PREADD_NOADREG}$	Without ADREG	655	565	468	453	423	MHz
$F_{MAX_NOPIPELINEREG}$	Without pipeline registers (MREG, ADREG)	483	410	338	323	304	MHz
$F_{MAX_NOPIPELINEREG_PATDET}$	Without pipeline registers (MREG, ADREG) with pattern detect	448	379	314	299	280	MHz

Notes:

1. For devices operating at the lower power V_{CCINT} = 0.72V voltages, DSP cascades that cross the clock region center might operate below the specified F_{MAX}.

Clock Buffers and Networks

Table 84: **Clock Buffers Switching Characteristics**

Symbol	Description	Speed Grade and V_{CCINT} Operating Voltages					Units
		0.90V	0.85V		0.72V		
		-3	-2	-1	-2	-1	
Global Clock Switching Characteristics (Including BUFGCTRL)							
F_{MAX}	Maximum frequency of a global clock tree (BUFG)	891	775	667	725	667	MHz
Global Clock Buffer with Input Divide Capability (BUFGCE_DIV)							
F_{MAX}	Maximum frequency of a global clock buffer with input divide capability (BUFGCE_DIV)	891	775	667	725	667	MHz
Global Clock Buffer with Clock Enable (BUFGCE)							
F_{MAX}	Maximum frequency of a global clock buffer with clock enable (BUFGCE)	891	775	667	725	667	MHz
Leaf Clock Buffer with Clock Enable (BUFCE_LEAF)							
F_{MAX}	Maximum frequency of a leaf clock buffer with clock enable (BUFCE_LEAF)	891	775	667	725	667	MHz
GTH or GTY Clock Buffer with Clock Enable and Clock Input Divide Capability (BUFG_GT)							
F_{MAX}	Maximum frequency of a serial transceiver clock buffer with clock enable and clock input divide capability	512	512	512	512	512	MHz

MMCM Switching Characteristics

Table 85: **MMCM Specification**

Symbol	Description	Speed Grade and V_{CCINT} Operating Voltages					Units
		0.90V	0.85V		0.72V		
		-3	-2	-1	-2	-1	
$MMCM_F_{INMAX}$	Maximum input clock frequency	1066	933	800	933	800	MHz
$MMCM_F_{INMIN}$	Minimum input clock frequency	10	10	10	10	10	MHz
$MMCM_F_{INJITTER}$	Maximum input clock period jitter	< 20% of clock input period or 1 ns Max					
$MMCM_F_{INDUTY}$	Input duty cycle range: 10–49 MHz	25–75					%
	Input duty cycle range: 50–199 MHz	30–70					%
	Input duty cycle range: 200–399 MHz	35–65					%
	Input duty cycle range: 400–499 MHz	40–60					%
	Input duty cycle range: >500 MHz	45–55					%
$MMCM_F_{MIN_PSCLK}$	Minimum dynamic phase shift clock frequency	0.01	0.01	0.01	0.01	0.01	MHz
$MMCM_F_{MAX_PSCLK}$	Maximum dynamic phase shift clock frequency	550	500	450	500	450	MHz
$MMCM_F_{VCOMIN}$	Minimum MMCM VCO frequency	800	800	800	800	800	MHz
$MMCM_F_{VCOMAX}$	Maximum MMCM VCO frequency	1600	1600	1600	1600	1600	MHz
$MMCM_F_{BANDWIDTH}$	Low MMCM bandwidth at typical[1]	1.00	1.00	1.00	1.00	1.00	MHz
	High MMCM bandwidth at typical[1]	4.00	4.00	4.00	4.00	4.00	MHz
$MMCM_T_{STATPHAOFFSET}$	Static phase offset of the MMCM outputs[2]	0.12	0.12	0.12	0.12	0.12	ns
$MMCM_T_{OUTJITTER}$	MMCM output jitter.	Note 3					
$MMCM_T_{OUTDUTY}$	MMCM output clock duty cycle precision[4]	0.165	0.20	0.20	0.20	0.20	ns
$MMCM_T_{LOCKMAX}$	MMCM maximum lock time for $MMCM_F_{PFDMIN}$	100	100	100	100	100	µs
$MMCM_F_{OUTMAX}$	MMCM maximum output frequency	891	775	667	725	667	MHz
$MMCM_F_{OUTMIN}$	MMCM minimum output frequency[4, 5]	6.25	6.25	6.25	6.25	6.25	MHz
$MMCM_T_{EXTFDVAR}$	External clock feedback variation	< 20% of clock input period or 1 ns Max					
$MMCM_RST_{MINPULSE}$	Minimum reset pulse width	5.00	5.00	5.00	5.00	5.00	ns
$MMCM_F_{PFDMAX}$	Maximum frequency at the phase frequency detector	550	500	450	500	450	MHz
$MMCM_F_{PFDMIN}$	Minimum frequency at the phase frequency detector	10	10	10	10	10	MHz
$MMCM_T_{FBDELAY}$	Maximum delay in the feedback path	5 ns Max or one clock cycle					
$MMCM_F_{DPRCLK_MAX}$	Maximum DRP clock frequency	250	250	250	250	250	MHz

Notes:

1. The MMCM does not filter typical spread-spectrum input clocks because they are usually far below the bandwidth filter frequencies.
2. The static offset is measured between any MMCM outputs with identical phase.
3. Values for this parameter are available in the Clocking Wizard.
4. Includes global clock buffer.
5. Calculated as $F_{VCO}/128$ assuming output duty cycle is 50%.

PLL Switching Characteristics

Table 86: **PLL Specification**

Symbol	Description[1]	Speed Grade and V_{CCINT} Operating Voltages					Units
		0.90V	0.85V		0.72V		
		-3	-2	-1	-2	-1	
PLL_F_{INMAX}	Maximum input clock frequency	1066	933	800	933	800	MHz
PLL_F_{INMIN}	Minimum input clock frequency	70	70	70	70	70	MHz
$PLL_F_{INJITTER}$	Maximum input clock period jitter	< 20% of clock input period or 1 ns Max					
PLL_F_{INDUTY}	Input duty cycle range: 70–399 MHz	35–65					%
	Input duty cycle range: 400–499 MHz	40–60					%
	Input duty cycle range: >500 MHz	45–55					%
PLL_F_{VCOMIN}	Minimum PLL VCO frequency	750	750	750	750	750	MHz
PLL_F_{VCOMAX}	Maximum PLL VCO frequency	1500	1500	1500	1500	1500	MHz
$PLL_T_{STATPHAOFFSET}$	Static phase offset of the PLL outputs[2]	0.12	0.12	0.12	0.12	0.12	ns
$PLL_T_{OUTJITTER}$	PLL output jitter.	Note 3					
$PLL_T_{OUTDUTY}$	PLL CLKOUT0, CLKOUT0B, CLKOUT1, CLKOUT1B duty-cycle precision[4]	0.165	0.20	0.20	0.20	0.20	ns
$PLL_T_{LOCKMAX}$	PLL maximum lock time	100					µs
PLL_F_{OUTMAX}	PLL maximum output frequency at CLKOUT0, CLKOUT0B, CLKOUT1, CLKOUT1B	891	775	667	725	667	MHz
	PLL maximum output frequency at CLKOUTPHY	2667	2667	2400	2400	2133	MHz
PLL_F_{OUTMIN}	PLL minimum output frequency at CLKOUT0, CLKOUT0B, CLKOUT1, CLKOUT1B[5]	5.86	5.86	5.86	5.86	5.86	MHz
	PLL minimum output frequency at CLKOUTPHY	2 x VCO mode: 1500, 1 x VCO mode: 750, 0.5 x VCO mode: 375					MHz
$PLL_RST_{MINPULSE}$	Minimum reset pulse width	5.00	5.00	5.00	5.00	5.00	ns
PLL_F_{PFDMAX}	Maximum frequency at the phase frequency detector	667.5	667.5	667.5	667.5	667.5	MHz
PLL_F_{PFDMIN}	Minimum frequency at the phase frequency detector	70	70	70	70	70	MHz
$PLL_F_{BANDWIDTH}$	PLL bandwidth at typical	14	14	14	14	14	MHz
$PLL_F_{DPRCLK_MAX}$	Maximum DRP clock frequency	250	250	250	250	250	MHz

Notes:

1. The PLL does not filter typical spread-spectrum input clocks because they are usually far below the loop filter frequencies.
2. The static offset is measured between any PLL outputs with identical phase.
3. Values for this parameter are available in the Clocking Wizard.
4. Includes global clock buffer.
5. Calculated as $F_{VCO}/128$ assuming output duty cycle is 50%.

Device Pin-to-Pin Output Parameter Guidelines

The pin-to-pin numbers in the following tables are based on the clock root placement in the center of the device. The actual pin-to-pin values will vary if the root placement selected is different. Consult the Vivado Design Suite timing report for the actual pin-to-pin values.

Table 87: **Global Clock Input to Output Delay Without MMCM (Near Clock Region)**

Symbol	Description[1]	Device	Speed Grade and V_{CCINT} Operating Voltages					Units
			0.90V	0.85V		0.72V		
			-3	-2	-1	-2	-1	
SSTL15 Global Clock Input to Output Delay using Output Flip-Flop, Fast Slew Rate, *without* MMCM								
T_{ICKOF}	Global clock input and output flip-flop *without* MMCM (near clock region)	XCZU2	N/A	4.90	5.28	6.08	6.51	ns
		XCZU3	N/A	4.90	5.28	6.08	6.51	ns
		XCZU4	5.05	5.53	5.95	6.90	7.49	ns
		XCZU5	5.05	5.53	5.95	6.90	7.49	ns
		XCZU6	5.42	5.91	6.35	7.48	8.03	ns
		XCZU7	5.96	6.54	7.01	8.17	8.76	ns
		XCZU9	5.42	5.91	6.35	7.48	8.03	ns
		XCZU11	5.92	6.49	6.96	8.16	8.91	ns
		XCZU15	5.58	6.09	6.55	7.75	8.33	ns
		XCZU17	6.29	6.90	7.40	8.68	9.32	ns
		XCZU19	6.29	6.90	7.40	8.68	9.32	ns
		XAZU2	N/A	N/A	5.28	N/A	6.51	ns
		XAZU3	N/A	N/A	5.28	N/A	6.51	ns
		XAZU4	N/A	N/A	5.95	N/A	7.49	ns
		XAZU5	N/A	N/A	5.95	N/A	7.49	ns
		XAZU7	N/A	N/A	7.01	N/A	N/A	ns
		XAZU11	N/A	N/A	6.96	N/A	N/A	ns
		XQZU3	N/A	4.90	5.28	N/A	6.51	ns
		XQZU5	N/A	5.53	5.95	N/A	7.49	ns
		XQZU7	N/A	6.54	7.01	N/A	8.76	ns
		XQZU9	N/A	5.91	6.35	N/A	8.03	ns
		XQZU11	N/A	6.49	6.96	N/A	8.91	ns
		XQZU15	N/A	6.09	6.55	N/A	8.33	ns
		XQZU19	N/A	6.90	7.40	N/A	9.32	ns

Notes:

1. This table lists representative values where one global clock input drives one vertical clock line in each accessible column, and where all accessible I/O and CLB flip-flops are clocked by the global clock net.

Table 88: **Global Clock Input to Output Delay Without MMCM (Far Clock Region)**

Symbol	Description[1]	Device	Speed Grade and V_{CCINT} Operating Voltages					Units
			0.90V	0.85V		0.72V		
			-3	-2	-1	-2	-1	
SSTL15 Global Clock Input to Output Delay using Output Flip-Flop, Fast Slew Rate, *without* MMCM								
T_{ICKOF_FAR}	Global clock input and output flip-flop *without* MMCM (far clock region)	XCZU2	N/A	5.27	5.68	6.59	7.06	ns
		XCZU3	N/A	5.27	5.68	6.59	7.06	ns
		XCZU4	5.24	5.73	6.17	7.17	7.79	ns
		XCZU5	5.24	5.73	6.17	7.17	7.79	ns
		XCZU6	5.91	6.49	6.97	8.16	8.76	ns
		XCZU7	5.96	6.54	7.01	8.17	8.76	ns
		XCZU9	5.91	6.49	6.97	8.16	8.76	ns
		XCZU11	6.29	6.91	7.41	8.72	9.52	ns
		XCZU15	5.90	6.49	6.96	8.16	8.77	ns
		XCZU17	6.84	7.53	8.07	9.52	10.23	ns
		XCZU19	6.84	7.53	8.07	9.52	10.23	ns
		XAZU2	N/A	N/A	5.68	N/A	7.06	ns
		XAZU3	N/A	N/A	5.68	N/A	7.06	ns
		XAZU4	N/A	N/A	6.17	N/A	7.79	ns
		XAZU5	N/A	N/A	6.17	N/A	7.79	ns
		XAZU7	N/A	N/A	7.01	N/A	N/A	ns
		XAZU11	N/A	N/A	7.41	N/A	N/A	ns
		XQZU3	N/A	5.27	5.68	N/A	7.06	ns
		XQZU5	N/A	5.73	6.17	N/A	7.79	ns
		XQZU7	N/A	6.54	7.01	N/A	8.76	ns
		XQZU9	N/A	6.49	6.97	N/A	8.76	ns
		XQZU11	N/A	6.91	7.41	N/A	9.52	ns
		XQZU15	N/A	6.49	6.96	N/A	8.77	ns
		XQZU19	N/A	7.53	8.07	N/A	10.23	ns

Notes:

1. This table lists representative values where one global clock input drives one vertical clock line in each accessible column, and where all accessible I/O and CLB flip-flops are clocked by the global clock net.

Table 89: **Global Clock Input to Output Delay With MMCM**

Symbol	Description[1, 2]	Device	Speed Grade and V_{CCINT} Operating Voltages					Units
			0.90V	0.85V		0.72V		
			-3	-2	-1	-2	-1	
SSTL15 Global Clock Input to Output Delay using Output Flip-Flop, Fast Slew Rate, *with* MMCM								
$T_{ICKOFMMCMCC}$	Global clock input and output flip-flop *with* MMCM	XCZU2	N/A	2.22	2.43	2.87	3.00	ns
		XCZU3	N/A	2.22	2.43	2.87	3.00	ns
		XCZU4	1.90	2.24	2.47	2.90	3.08	ns
		XCZU5	1.90	2.24	2.47	2.90	3.08	ns
		XCZU6	1.83	2.15	2.36	2.80	2.95	ns
		XCZU7	1.98	2.32	2.55	3.00	3.15	ns
		XCZU9	1.83	2.15	2.36	2.80	2.95	ns
		XCZU11	1.96	2.30	2.51	2.99	3.20	ns
		XCZU15	1.85	2.18	2.38	2.82	2.98	ns
		XCZU17	2.08	2.44	2.66	3.15	3.33	ns
		XCZU19	2.08	2.44	2.66	3.15	3.33	ns
		XAZU2	N/A	N/A	2.43	N/A	3.00	ns
		XAZU3	N/A	N/A	2.43	N/A	3.00	ns
		XAZU4	N/A	N/A	2.47	N/A	3.08	ns
		XAZU5	N/A	N/A	2.47	N/A	3.08	ns
		XAZU7	N/A	N/A	2.55	N/A	N/A	ns
		XAZU11	N/A	N/A	2.51	N/A	N/A	ns
		XQZU3	N/A	2.22	2.43	N/A	3.00	ns
		XQZU5	N/A	2.24	2.47	N/A	3.08	ns
		XQZU7	N/A	2.32	2.55	N/A	3.15	ns
		XQZU9	N/A	2.15	2.36	N/A	2.95	ns
		XQZU11	N/A	2.30	2.51	N/A	3.20	ns
		XQZU15	N/A	2.18	2.38	N/A	2.98	ns
		XQZU19	N/A	2.44	2.66	N/A	3.33	ns

Notes:

1. This table lists representative values where one global clock input drives one vertical clock line in each accessible column, and where all accessible I/O and CLB flip-flops are clocked by the global clock net.
2. MMCM output jitter is already included in the timing calculation.

Table 90: **Source Synchronous Output Characteristics (Component Mode)**

Description	Speed Grade and V_{CCINT} Operating Voltages					Units
	0.90V	0.85V		0.72V		
	-3	-2	-1	-2	-1	
$T_{OUTPUT_LOGIC_DELAY_VARIATION}$ [1]	80					ps

Notes:

1. Delay mismatch across a transmit bus when using component mode output logic (ODDRE1, OSERDESE3) within a bank.

Device Pin-to-Pin Input Parameter Guidelines

The pin-to-pin numbers in the following tables are based on the clock root placement in the center of the device. The actual pin-to-pin values will vary if the root placement selected is different. Consult the Vivado Design Suite timing report for the actual pin-to-pin values.

Table 91: **Global Clock Input Setup and Hold With 3.3V HD I/O Without MMCM**

Symbol	Description		Device	Speed Grade and V_{CCINT} Operating Voltages					Units
				0.90V	0.85V		0.72V		
				-3	-2	-1	-2	-1	
Input Setup and Hold Time Relative to Global Clock Input Signal using SSTL15 Standard.[1, 2, 3]									
T_{PSFD_ZU2}	Global clock input and input flip-flop (or latch) *without* MMCM	Setup	XCZU2	N/A	2.27	2.37	3.54	3.82	ns
T_{PHFD_ZU2}		Hold			–0.36	–0.36	–1.03	–1.03	ns
T_{PSFD_ZU3}		Setup	XCZU3	N/A	2.27	2.37	3.54	3.82	ns
T_{PHFD_ZU3}		Hold			–0.36	–0.36	–1.03	–1.03	ns
T_{PSFD_ZU4}		Setup	XCZU4	2.00	2.30	2.39	3.56	3.81	ns
T_{PHFD_ZU4}		Hold		–0.37	–0.37	–0.37	–1.05	–1.05	ns
T_{PSFD_ZU5}		Setup	XCZU5	2.00	2.30	2.39	3.56	3.81	ns
T_{PHFD_ZU5}		Hold		–0.37	–0.37	–0.37	–1.05	–1.05	ns
T_{PSFD_ZU6}		Setup	XCZU6	1.51	1.79	1.86	2.85	3.06	ns
T_{PHFD_ZU6}		Hold		–0.05	–0.05	–0.05	–0.60	–0.60	ns
T_{PSFD_ZU7}		Setup	XCZU7	2.02	2.32	2.42	3.59	3.87	ns
T_{PHFD_ZU7}		Hold		–0.40	–0.40	–0.40	–1.10	–1.10	ns
T_{PSFD_ZU9}		Setup	XCZU9	1.51	1.79	1.86	2.85	3.06	ns
T_{PHFD_ZU9}		Hold		–0.05	–0.05	–0.05	–0.60	–0.60	ns
T_{PSFD_ZU11}		Setup	XCZU11	1.99	2.28	2.38	3.54	3.79	ns
T_{PHFD_ZU11}		Hold		–0.38	–0.38	–0.38	–1.05	–1.05	ns
T_{PSFD_ZU15}		Setup	XCZU15	1.51	1.79	1.85	2.84	3.05	ns
T_{PHFD_ZU15}		Hold		–0.04	–0.04	–0.04	–0.60	–0.60	ns
T_{PSFD_ZU17}		Setup	XCZU17	2.00	2.29	2.38	3.56	3.83	ns
T_{PHFD_ZU17}		Hold		–0.38	–0.38	–0.38	–1.08	–1.08	ns
T_{PSFD_ZU19}		Setup	XCZU19	2.00	2.29	2.38	3.56	3.83	ns
T_{PHFD_ZU19}		Hold		–0.38	–0.38	–0.38	–1.08	–1.08	ns
T_{PSFD_XAZU2}		Setup	XAZU2	N/A	N/A	2.37	N/A	3.82	ns
T_{PHFD_XAZU2}		Hold		N/A	N/A	–0.36	N/A	–1.03	ns
T_{PSFD_XAZU3}		Setup	XAZU3	N/A	N/A	2.37	N/A	3.82	ns
T_{PHFD_XAZU3}		Hold		N/A	N/A	–0.36	N/A	–1.03	ns
T_{PSFD_XAZU4}		Setup	XAZU4	N/A	N/A	2.39	N/A	3.81	ns
T_{PHFD_XAZU4}		Hold		N/A	N/A	–0.37	N/A	–1.05	ns
T_{PSFD_XAZU5}		Setup	XAZU5	N/A	N/A	2.39	N/A	3.81	ns
T_{PHFD_XAZU5}		Hold		N/A	N/A	–0.37	N/A	–1.05	ns

Table 91: **Global Clock Input Setup and Hold With 3.3V HD I/O Without MMCM** *(cont'd)*

Symbol	Description		Device	Speed Grade and V_{CCINT} Operating Voltages					Units
				0.90V	0.85V		0.72V		
				-3	-2	-1	-2	-1	
T_{PSFD_XAZU7}	Global clock input and input flip-flop (or latch) *without* MMCM	Setup	XAZU7	N/A	N/A	2.42	N/A	N/A	ns
T_{PHFD_XAZU7}		Hold		N/A	N/A	–0.40	N/A	N/A	ns
T_{PSFD_XAZU11}		Setup	XAZU11	N/A	N/A	2.38	N/A	N/A	ns
T_{PHFD_XAZU11}		Hold		N/A	N/A	–0.38	N/A	N/A	ns
T_{PSFD_XQZU3}		Setup	XQZU3	N/A	2.27	2.37	N/A	3.82	ns
T_{PHFD_XQZU3}		Hold		N/A	–0.36	–0.36	N/A	–1.03	ns
T_{PSFD_XQZU5}		Setup	XQZU5	N/A	2.30	2.39	N/A	3.81	ns
T_{PHFD_XQZU5}		Hold		N/A	–0.37	–0.37	N/A	–1.05	ns
T_{PSFD_XQZU7}		Setup	XQZU7	N/A	2.32	2.42	N/A	3.87	ns
T_{PHFD_XQZU7}		Hold		N/A	–0.40	–0.40	N/A	–1.10	ns
T_{PSFD_XQZU9}		Setup	XQZU9	N/A	1.79	1.86	N/A	3.06	ns
T_{PHFD_XQZU9}		Hold		N/A	–0.05	–0.05	N/A	–0.60	ns
T_{PSFD_XQZU11}		Setup	XQZU11	N/A	2.28	2.38	N/A	3.79	ns
T_{PHFD_XQZU11}		Hold		N/A	–0.38	–0.38	N/A	–1.05	ns
T_{PSFD_XQZU15}		Setup	XQZU15	N/A	1.79	1.85	N/A	3.05	ns
T_{PHFD_XQZU15}		Hold		N/A	–0.04	–0.04	N/A	–0.60	ns
T_{PSFD_XQZU19}		Setup	XQZU19	N/A	2.29	2.38	N/A	3.83	ns
T_{PHFD_XQZU19}		Hold		N/A	–0.38	–0.38	N/A	–1.08	ns

Notes:

1. Setup and hold times are measured over worst case conditions (process, voltage, temperature). Setup time is measured relative to the global clock input signal using the slowest process, slowest temperature, and slowest voltage. Hold time is measured relative to the global clock input signal using the fastest process, fastest temperature, and fastest voltage.
2. This table lists representative values where one global clock input drives one vertical clock line in each accessible column, and where all accessible I/O and CLB flip-flops are clocked by the global clock net.
3. Use IBIS to determine any duty-cycle distortion incurred using various standards.

Table 92: **Global Clock Input Setup and Hold With MMCM**

Symbol	Description		Device	Speed Grade and V_{CCINT} Operating Voltages					Units
				0.90V	0.85V		0.72V		
				-3	-2	-1	-2	-1	
Input Setup and Hold Time Relative to Global Clock Input Signal using SSTL15 Standard.[1, 2, 3]									
$T_{PSMMCMCC_ZU2}$	Global clock input and input flip-flop (or latch) with MMCM	Setup	XCZU2	N/A	1.83	1.96	1.83	1.96	ns
$T_{PHMMCMCC_ZU2}$		Hold			–0.19	–0.19	–0.24	–0.24	ns
$T_{PSMMCMCC_ZU3}$		Setup	XCZU3	N/A	1.83	1.96	1.83	1.96	ns
$T_{PHMMCMCC_ZU3}$		Hold			–0.19	–0.19	–0.24	–0.24	ns
$T_{PSMMCMCC_ZU4}$		Setup	XCZU4	1.82	1.82	1.94	1.82	1.94	ns
$T_{PHMMCMCC_ZU4}$		Hold		–0.16	–0.16	–0.16	–0.25	–0.25	ns
$T_{PSMMCMCC_ZU5}$		Setup	XCZU5	1.82	1.82	1.94	1.82	1.94	ns
$T_{PHMMCMCC_ZU5}$		Hold		–0.16	–0.16	–0.16	–0.25	–0.25	ns
$T_{PSMMCMCC_ZU6}$		Setup	XCZU6	2.00	2.00	2.12	2.00	2.12	ns
$T_{PHMMCMCC_ZU6}$		Hold		–0.11	–0.11	–0.11	–0.18	–0.18	ns
$T_{PSMMCMCC_ZU7}$		Setup	XCZU7	1.89	1.91	2.02	1.91	2.02	ns
$T_{PHMMCMCC_ZU7}$		Hold		–0.14	–0.14	–0.14	–0.18	–0.18	ns
$T_{PSMMCMCC_ZU9}$		Setup	XCZU9	2.00	2.00	2.12	2.00	2.12	ns
$T_{PHMMCMCC_ZU9}$		Hold		–0.11	–0.11	–0.11	–0.18	–0.18	ns
$T_{PSMMCMCC_ZU11}$		Setup	XCZU11	1.89	1.89	2.02	1.89	2.02	ns
$T_{PHMMCMCC_ZU11}$		Hold		–0.20	–0.20	–0.20	–0.25	–0.25	ns
$T_{PSMMCMCC_ZU15}$		Setup	XCZU15	1.99	1.99	2.12	1.99	2.12	ns
$T_{PHMMCMCC_ZU15}$		Hold		–0.10	–0.10	–0.10	–0.16	–0.16	ns
$T_{PSMMCMCC_ZU17}$		Setup	XCZU17	1.89	1.89	2.03	1.89	2.03	ns
$T_{PHMMCMCC_ZU17}$		Hold		–0.16	–0.16	–0.16	–0.23	–0.23	ns
$T_{PSMMCMCC_ZU19}$		Setup	XCZU19	1.89	1.89	2.03	1.89	2.03	ns
$T_{PHMMCMCC_ZU19}$		Hold		–0.16	–0.16	–0.16	–0.23	–0.23	ns
$T_{PSMMCMCC_XAZU2}$		Setup	XAZU2	N/A	N/A	1.96	N/A	1.96	ns
$T_{PHMMCMCC_XAZU2}$		Hold		N/A	N/A	–0.19	N/A	–0.24	ns
$T_{PSMMCMCC_XAZU3}$		Setup	XAZU3	N/A	N/A	1.96	N/A	1.96	ns
$T_{PHMMCMCC_XAZU3}$		Hold		N/A	N/A	–0.19	N/A	–0.24	ns
$T_{PSMMCMCC_XAZU4}$		Setup	XAZU4	N/A	N/A	1.94	N/A	1.94	ns
$T_{PHMMCMCC_XAZU4}$		Hold		N/A	N/A	–0.16	N/A	–0.25	ns
$T_{PSMMCMCC_XAZU5}$		Setup	XAZU5	N/A	N/A	1.94	N/A	1.94	ns
$T_{PHMMCMCC_XAZU5}$		Hold		N/A	N/A	–0.16	N/A	–0.25	ns

Table 92: **Global Clock Input Setup and Hold With MMCM** *(cont'd)*

Symbol	Description		Device	Speed Grade and V_{CCINT} Operating Voltages					Units
				0.90V	0.85V		0.72V		
				-3	-2	-1	-2	-1	
$T_{PSMMCMCC_XAZU7}$	Global clock input and input flip-flop (or latch) with MMCM	Setup	XAZU7	N/A	N/A	2.02	N/A	N/A	ns
$T_{PHMMCMCC_XAZU7}$		Hold		N/A	N/A	–0.14	N/A	N/A	ns
$T_{PSMMCMCC_XAZU11}$		Setup	XAZU11	N/A	N/A	2.02	N/A	N/A	ns
$T_{PHMMCMCC_XAZU11}$		Hold		N/A	N/A	–0.20	N/A	N/A	ns
$T_{PSMMCMCC_XQZU3}$		Setup	XQZU3	N/A	1.83	1.96	N/A	1.96	ns
$T_{PHMMCMCC_XQZU3}$		Hold		N/A	–0.19	–0.19	N/A	–0.24	ns
$T_{PSMMCMCC_XQZU5}$		Setup	XQZU5	N/A	1.82	1.94	N/A	1.94	ns
$T_{PHMMCMCC_XQZU5}$		Hold		N/A	–0.16	–0.16	N/A	–0.25	ns
$T_{PSMMCMCC_XQZU7}$		Setup	XQZU7	N/A	1.91	2.02	N/A	2.02	ns
$T_{PHMMCMCC_XQZU7}$		Hold		N/A	–0.14	–0.14	N/A	–0.18	ns
$T_{PSMMCMCC_XQZU9}$		Setup	XQZU9	N/A	2.00	2.12	N/A	2.12	ns
$T_{PHMMCMCC_XQZU9}$		Hold		N/A	–0.11	–0.11	N/A	–0.18	ns
$T_{PSMMCMCC_XQZU11}$		Setup	XQZU11	N/A	1.89	2.02	N/A	2.02	ns
$T_{PHMMCMCC_XQZU11}$		Hold		–0.20	–0.20	–0.20	N/A	–0.25	ns
$T_{PSMMCMCC_XQZU15}$		Setup	XQZU15	N/A	1.99	2.12	N/A	2.12	ns
$T_{PHMMCMCC_XQZU15}$		Hold		N/A	–0.10	–0.10	N/A	–0.16	ns
$T_{PSMMCMCC_XQZU19}$		Setup	XQZU19	N/A	1.89	2.03	N/A	2.03	ns
$T_{PHMMCMCC_XQZU19}$		Hold		N/A	–0.16	–0.16	N/A	–0.23	ns

Notes:

1. Setup and hold times are measured over worst case conditions (process, voltage, temperature). Setup time is measured relative to the global clock input signal using the slowest process, slowest temperature, and slowest voltage. Hold time is measured relative to the global clock input signal using the fastest process, fastest temperature, and fastest voltage.
2. This table lists representative values where one global clock input drives one vertical clock line in each accessible column, and where all accessible I/O and CLB flip-flops are clocked by the global clock net.
3. Use IBIS to determine any duty-cycle distortion incurred using various standards.

Table 93: **Sampling Window**

Description	Speed Grade and V_{CCINT} Operating Voltages					Units
	0.90V	0.85V		0.72V		
	-3	-2	-1	-2	-1	
T_{SAMP_BUFG}[1]	510	610	610	610	610	ps
$T_{SAMP_NATIVE_DPA}$[2]	100	100	125	125	150	ps
$T_{SAMP_NATIVE_BISC}$[3]	60	60	85	85	110	ps

Notes:

1. This parameter indicates the total sampling error of the Zynq UltraScale+ MPSoC DDR input registers, measured across voltage, temperature, and process. The characterization methodology uses the MMCM to capture the DDR input registers' edges of operation. These measurements include: CLK0 MMCM jitter, MMCM accuracy (phase offset), and MMCM phase shift resolution. These measurements do not include package or clock tree skew.
2. This parameter is the receive sampling error for RX_BITSLICE when using dynamic phase alignment.
3. This parameter is the receive sampling error for RX_BITSLICE when using built-in self-calibration (BISC).

Table 94: **Input Logic Characteristics for Dynamic Phase Aligned Applications (Component Mode)**

Description	Speed Grade and V_{CCINT} Operating Voltages					Units
	0.90V	0.85V		0.72V		
	-3	-2	-1	-2	-1	
$T_{INPUT_LOGIC_UNCERTAINTY}$[1]	40					ps
T_{CAL_ERROR}[2]	24					ps

Notes:

1. Input_logic_uncertainty accounts for the setup/hold and any pattern dependent jitter for the input logic (input register, IDDRE1, or ISERDESE3).
2. Calibration error associated with quantization effects based on the IDELAY resolution. Calibration must be performed for each input pin to ensure optimal performance.

Package Parameter Guidelines

The parameters in this section provide the necessary values for calculating timing budgets for clock transmitter and receiver data-valid windows.

Table 95: **Package Skew**

Symbol	Description	Device	Package	Value	Units
PKGSKEW	Package Skew[1, 2]	XCZU2	SBVA484	105	ps
			SFVA625	108	ps
			SFVC784	93	ps
		XCZU3	SBVA484	105	ps
			SFVA625	108	ps
			SFVC784	93	ps
		XCZU4	SFVC784	133	ps
			FBVB900	159	ps
		XCZU5	SFVC784	133	ps
			FBVB900	159	ps
		XCZU6	FFVC900	119	ps
			FFVB1156	134	ps
		XCZU7	FBVB900	141	ps
			FFVC1156	175	ps
			FFVF1517	305	ps
		XCZU9	FFVC900	119	ps
			FFVB1156	134	ps
		XCZU11	FFVC1156	170	ps
			FFVB1517	176	ps
			FFVF1517	186	ps
			FFVC1760	215	ps
		XCZU15	FFVC900	118	ps
			FFVB1156	132	ps
		XCZU17	FFVB1517	221	ps
			FFVC1760	226	ps
			FFVD1760	178	ps
			FFVE1924	174	ps
		XCZU19	FFVB1517	221	ps
			FFVC1760	226	ps
			FFVD1760	178	ps
			FFVE1924	174	ps

Table 95: **Package Skew** *(cont'd)*

Symbol	Description	Device	Package	Value	Units
PKGSKEW	Package Skew[1, 2]	XAZU2EG	SBVA484	105	ps
			SFVA625	108	ps
			SFVC784	93	ps
		XAZU3EG	SBVA484	105	ps
			SFVA625	108	ps
			SFVC784	93	ps
		XAZU4EV	SFVC784	133	ps
		XAZU5EV	SFVC784	133	ps
		XAZU7EV	FBVB900	141	ps
		XAZU11EG	FFVF1517	186	ps
		XQZU3EG	SFRA484	106	ps
			SFRC784	93	ps
		XQZU5EV	SFRC784	133	ps
			FFRB900	155	ps
		XQZU7EV	FFRB900	141	ps
			FFRC1156	176	ps
		XQZU9EG	FFRC900	119	ps
			FFRB1156	135	ps
		XQZU11EG	FFRC1156	170	ps
			FFRC1760	214	ps
		XQZU15EG	FFRC900	119	ps
			FFRB1156	127	ps
		XQZU19EG	FFRB1517	211	ps
			FFRC1760	228	ps

Notes:

1. These values represent the worst-case skew between any two SelectIO resources in the package: shortest delay to longest delay from die pad to ball.
2. Package delay information is available for these device/package combinations. This information can be used to deskew the package.

GTH Transceiver Specifications

The *UltraScale Architecture and Product Data Sheet: Overview* (DS890) lists the Zynq UltraScale+ MPSoCs that include the GTH transceivers.

GTH Transceiver DC Input and Output Levels

The following table summarizes the DC specifications of the GTH transceivers in Zynq UltraScale+ MPSoCs. Consult the *UltraScale Architecture GTH Transceivers User Guide* (UG576) for further details.

Table 96: **GTH Transceiver DC Specifications**

Symbol	DC Parameter	Conditions	Min	Typ	Max	Units
DV_{PPIN}	Differential peak-to-peak input voltage (external AC coupled)	>10.3125 Gb/s	150	–	1250	mV
		6.6 Gb/s to 10.3125 Gb/s	150	–	1250	mV
		≤ 6.6 Gb/s	150	–	2000	mV
V_{IN}	Single-ended input voltage. Voltage measured at the pin referenced to GND	DC coupled $V_{MGTAVTT}$ = 1.2V	–400	–	$V_{MGTAVTT}$	mV
V_{CMIN}	Common mode input voltage	DC coupled $V_{MGTAVTT}$ = 1.2V	–	2/3 $V_{MGTAVTT}$	–	mV
D_{VPPOUT}	Differential peak-to-peak output voltage[1]	Transmitter output swing is set to `11111`	800	–	–	mV
$V_{CMOUTDC}$	Common mode output voltage: DC coupled (equation based)	When remote RX is terminated to GND	$V_{MGTAVTT}/2 - D_{VPPOUT}/4$			mV
		When remote RX termination is floating	$V_{MGTAVTT} - D_{VPPOUT}/2$			mV
		When remote RX is terminated to V_{RX_TERM}[2]	$V_{MGTAVTT} - \frac{D_{VPPOUT}}{4} - \left(\frac{V_{MGTAVTT} - V_{RX_TERM}}{2}\right)$			mV
$V_{CMOUTAC}$	Common mode output voltage: AC coupled (equation based)		$V_{MGTAVTT} - D_{VPPOUT}/2$			mV
R_{IN}	Differential input resistance		–	100	–	Ω
R_{OUT}	Differential output resistance		–	100	–	Ω
T_{OSKEW}	Transmitter output pair (TXP and TXN) intra-pair skew (all packages)		–	–	10	ps
C_{EXT}	Recommended external AC coupling capacitor[3]		–	100	–	nF

Notes:

1. The output swing and pre-emphasis levels are programmable using the attributes discussed in the *UltraScale Architecture GTH Transceivers User Guide* (UG576), and can result in values lower than reported in this table.
2. V_{RX_TERM} is the remote RX termination voltage.
3. Other values can be used as appropriate to conform to specific protocols and standards.

Figure 3: **Single-Ended Peak-to-Peak Voltage**

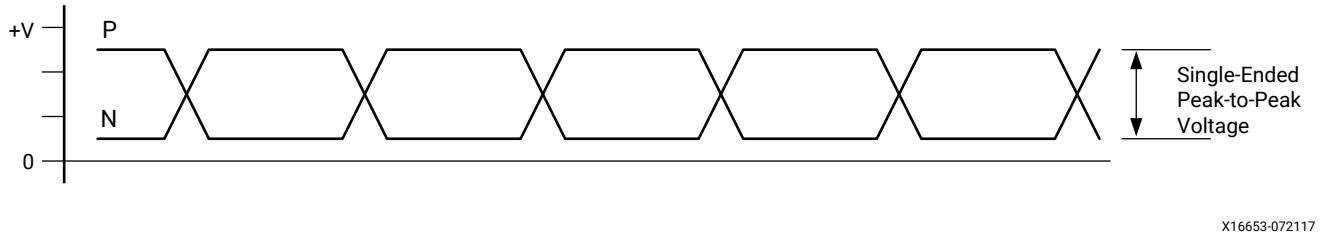

Figure 4: **Differential Peak-to-Peak Voltage**

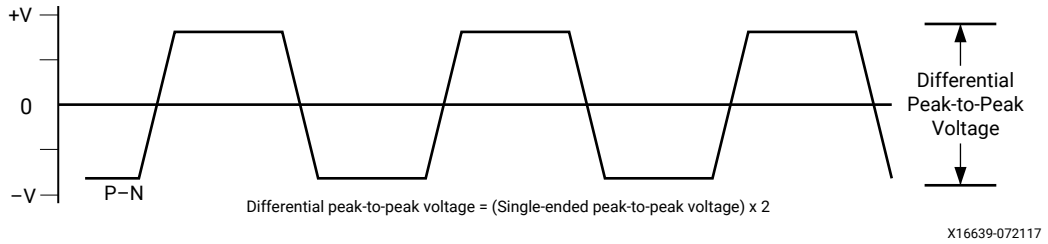

Table 97 and Table 98 summarize the DC specifications of the GTH transceivers input and output clocks in Zynq UltraScale+ MPSoCs. Consult the *UltraScale Architecture GTH Transceivers User Guide* (UG576) for further details.

Table 97: **GTH Transceiver Clock Input Level Specification**

Symbol	DC Parameter	Min	Typ	Max	Units
V_{IDIFF}	Differential peak-to-peak input voltage	250	–	2000	mV
R_{IN}	Differential input resistance	–	100	–	Ω
C_{EXT}	Required external AC coupling capacitor	–	10	–	nF

Table 98: **GTH Transceiver Clock Output Level Specification**

Symbol	Description	Conditions	Min	Typ	Max	Units
V_{OL}	Output Low voltage for P and N	R_T = 100Ω across P and N signals	100	–	330	mV
V_{OH}	Output High voltage for P and N	R_T = 100Ω across P and N signals	500	–	700	mV
V_{DDOUT}	Differential output voltage (P–N), P = High (N–P), N = High	R_T = 100Ω across P and N signals	300	–	430	mV
V_{CMOUT}	Common mode voltage	R_T = 100Ω across P and N signals	300	–	500	mV

GTH Transceiver Switching Characteristics

Consult the *UltraScale Architecture GTH Transceivers User Guide* (UG576) for further information.

Table 99: **GTH Transceiver Performance**

Symbol	Description	Output Divider	Speed Grade and V_{CCINT} Operating Voltages										Units
			0.90V		0.85V				0.72V				
			-3		-2		-1		-2		-1		
F_{GTHMAX}	GTH maximum line rate		16.375[1]		16.375[1]		12.5		12.5		10.3125		Gb/s
F_{GTHMIN}	GTH minimum line rate		0.5		0.5		0.5		0.5		0.5		Gb/s
			Min	Max	Min	Max	Min	Max	Min	Max	Min	Max	
$F_{GTHCRANGE}$	CPLL line rate range[2]	1	4	12.5	4	12.5	4	8.5	4	8.5	4	8.5	Gb/s
		2	2	6.25	2	6.25	2	4.25	2	4.25	2	4.25	Gb/s
		4	1	3.125	1	3.125	1	2.125	1	2.125	1	2.125	Gb/s
		8	0.5	1.5625	0.5	1.5625	0.5	1.0625	0.5	1.0625	0.5	1.0625	Gb/s
		16	N/A										Gb/s
			Min	Max	Min	Max	Min	Max	Min	Max	Min	Max	
$F_{GTHQRANGE1}$	QPLL0 line rate range[3]	1	9.8	16.375	9.8	16.375	9.8	12.5	9.8	12.5	9.8	10.3125	Gb/s
		2	4.9	8.1875	4.9	8.1875	4.9	8.15	4.9	8.1875	4.9	8.15	Gb/s
		4	2.45	4.0938	2.45	4.0938	2.45	4.075	2.45	4.0938	2.45	4.075	Gb/s
		8	1.225	2.0469	1.225	2.0469	1.225	2.0375	1.225	2.0469	1.225	2.0375	Gb/s
		16	0.6125	1.0234	0.6125	1.0234	0.6125	1.0188	0.6125	1.0234	0.6125	1.0188	Gb/s

Table 99: **GTH Transceiver Performance** *(cont'd)*

Symbol	Description	Output Divider	Speed Grade and V_{CCINT} Operating Voltages										Units
			0.90V		0.85V				0.72V				
			-3		-2		-1		-2		-1		
			Min	Max	Min	Max	Min	Max	Min	Max	Min	Max	
$F_{GTHQRANGE2}$	QPLL1 line rate range[4]	1	8.0	13.0	8.0	13.0	8.0	12.5	8.0	12.5	8.0	10.3125	Gb/s
		2	4.0	6.5	4.0	6.5	4.0	6.5	4.0	6.5	4.0	6.5	Gb/s
		4	2.0	3.25	2.0	3.25	2.0	3.25	2.0	3.25	2.0	3.25	Gb/s
		8	1.0	1.625	1.0	1.625	1.0	1.625	1.0	1.625	1.0	1.625	Gb/s
		16	0.5	0.8125	0.5	0.8125	0.5	0.8125	0.5	0.8125	0.5	0.8125	Gb/s
			Min	Max	Min	Max	Min	Max	Min	Max	Min	Max	
$F_{CPLLRANGE}$	CPLL frequency range		2	6.25	2	6.25	2	4.25	2	4.25	2	4.25	GHz
$F_{QPLL0RANGE}$	QPLL0 frequency range		9.8	16.375	9.8	16.375	9.8	16.375	9.8	16.375	9.8	16.375	GHz
$F_{QPLL1RANGE}$	QPLL1 frequency range		8	13	8	13	8	13	8	13	8	13	GHz

Notes:

1. GTH transceiver line rates in the SFVC784 and SFRC784 packages support data rates up to 12.5 Gb/s.
2. The values listed are the rounded results of the calculated equation (2 × CPLL_Frequency)/Output_Divider.
3. The values listed are the rounded results of the calculated equation (QPLL0_Frequency)/Output_Divider.
4. The values listed are the rounded results of the calculated equation (QPLL1_Frequency)/Output_Divider.

Table 100: **GTH Transceiver Dynamic Reconfiguration Port (DRP) Switching Characteristics**

Symbol	Description	All Speed Grades	Units
$F_{GTHDRPCLK}$	GTHDRPCLK maximum frequency	250	MHz

Table 101: **GTH Transceiver Reference Clock Switching Characteristics**

Symbol	Description	Conditions	All Speed Grades			Units
			Min	Typ	Max	
F_{GCLK}	Reference clock frequency range		60	–	820	MHz
T_{RCLK}	Reference clock rise time	20% – 80%	–	200	–	ps
T_{FCLK}	Reference clock fall time	80% – 20%	–	200	–	ps
T_{DCREF}	Reference clock duty cycle	Transceiver PLL only	40	50	60	%

Table 102: **GTH Transceiver Reference Clock Oscillator Selection Phase Noise Mask**

Symbol	Description	Offset Frequency	Min	Typ	Max	Units
$QPLL_{REFCLKMASK}$[1, 2]	QPLL0/QPLL1 reference clock select phase noise mask at REFCLK frequency = 312.5 MHz	10 kHz	–	–	–105	dBc/Hz
		100 kHz	–	–	–124	
		1 MHz	–	–	–130	
$CPLL_{REFCLKMASK}$[1, 2]	CPLL reference clock select phase noise mask at REFCLK frequency = 312.5 MHz	10 kHz	–	–	–105	dBc/Hz
		100 kHz	–	–	–124	
		1 MHz	–	–	–130	
		50 MHz	–	–	–140	

Notes:

1. For reference clock frequencies other than 312.5 MHz, adjust the phase-noise mask values by 20 × Log(N/312.5) where N is the new reference clock frequency in MHz.
2. This reference clock phase-noise mask is superseded by any reference clock phase-noise mask that is specified in a supported protocol, e.g., PCIe.

Table 103: **GTH Transceiver PLL/Lock Time Adaptation**

Symbol	Description	Conditions	All Speed Grades			Units
			Min	Typ	Max	
T_{LOCK}	Initial PLL lock		–	–	1	ms
T_{DLOCK}	Clock recovery phase acquisition and adaptation time for decision feedback equalizer (DFE)	After the PLL is locked to the reference clock, this is the time it takes to lock the clock data recovery (CDR) to the data present at the input.	–	50,000	37×10^6	UI
	Clock recovery phase acquisition and adaptation time for low-power mode (LPM) when the DFE is disabled		–	50,000	2.3×10^6	UI

Table 104: **GTH Transceiver User Clock Switching Characteristics**

Symbol	Description[1]	Data Width Conditions (Bit)		Speed Grade and V_{CCINT} Operating Voltages					Units
				0.90V	0.85V		0.72V		
		Internal Logic	Interconnect Logic	-3[2]	-2[2, 3]	-1[4, 5]	-2[3]	-1[5]	
$F_{TXOUTPMA}$	TXOUTCLK maximum frequency sourced from OUTCLKPMA			511.719	511.719	390.625	390.625	322.266	MHz
$F_{RXOUTPMA}$	RXOUTCLK maximum frequency sourced from OUTCLKPMA			511.719	511.719	390.625	390.625	322.266	MHz
$F_{TXOUTPROGDIV}$	TXOUTCLK maximum frequency sourced from TXPROGDIVCLK			511.719	511.719	511.719	511.719	511.719	MHz
$F_{RXOUTPROGDIV}$	RXOUTCLK maximum frequency sourced from RXPROGDIVCLK			511.719	511.719	511.719	511.719	511.719	MHz
F_{TXIN}	TXUSRCLK[6] maximum frequency	16	16, 32	511.719	511.719	390.625	390.625	322.266	MHz
		32	32, 64	511.719	511.719	390.625	390.625	322.266	MHz
		20	20, 40	409.375	409.375	312.500	312.500	257.813	MHz
		40	40, 80	409.375	409.375	312.500	312.500	257.813	MHz

Table 104: **GTH Transceiver User Clock Switching Characteristics** *(cont'd)*

Symbol	Description[1]	Data Width Conditions (Bit)		Speed Grade and V_{CCINT} Operating Voltages					Units
				0.90V	0.85V		0.72V		
		Internal Logic	Interconnect Logic	-3[2]	-2[2, 3]	-1[4, 5]	-2[3]	-1[5]	
F_{RXIN}	RXUSRCLK[6] maximum frequency	16	16, 32	511.719	511.719	390.625	390.625	322.266	MHz
		32	32, 64	511.719	511.719	390.625	390.625	322.266	MHz
		20	20, 40	409.375	409.375	312.500	312.500	257.813	MHz
		40	40, 80	409.375	409.375	312.500	312.500	257.813	MHz
F_{TXIN2}	TXUSRCLK2[6] maximum frequency	16	16	511.719	511.719	390.625	390.625	322.266	MHz
		16	32	255.859	255.859	195.313	195.313	161.133	MHz
		32	32	511.719	511.719	390.625	390.625	322.266	MHz
		32	64	255.859	255.859	195.313	195.313	161.133	MHz
		20	20	409.375	409.375	312.500	312.500	257.813	MHz
		20	40	204.688	204.688	156.250	156.250	128.906	MHz
		40	40	409.375	409.375	312.500	312.500	257.813	MHz
		40	80	204.688	204.688	156.250	156.250	128.906	MHz
F_{RXIN2}	RXUSRCLK2[6] maximum frequency	16	16	511.719	511.719	390.625	390.625	322.266	MHz
		16	32	255.859	255.859	195.313	195.313	161.133	MHz
		32	32	511.719	511.719	390.625	390.625	322.266	MHz
		32	64	255.859	255.859	195.313	195.313	161.133	MHz
		20	20	409.375	409.375	312.500	312.500	257.813	MHz
		20	40	204.688	204.688	156.250	156.250	128.906	MHz
		40	40	409.375	409.375	312.500	312.500	257.813	MHz
		40	80	204.688	204.688	156.250	156.250	128.906	MHz

Notes:

1. Clocking must be implemented as described in *UltraScale Architecture GTH Transceivers User Guide* (UG576).
2. For speed grades -3E, -2E, and -2I, a 16-bit and 20-bit internal data path can only be used for line rates less than 8.1875 Gb/s.
3. For speed grade -2LE, a 16-bit and 20-bit internal data path can only be used for line rates less than 8.1875 Gb/s when V_{CCINT} = 0.85V or 6.25 Gb/s when V_{CCINT} = 0.72V.
4. For speed grades -1E, -1I, -1Q, and -1M, a 16-bit and 20-bit internal data path can only be used for line rates less than 6.25 Gb/s.
5. For speed grade -1LI, a 16-bit and 20-bit internal data path can only be used for line rates less than 6.25 Gb/s when V_{CCINT} = 0.85V or 5.15625 Gb/s when V_{CCINT} = 0.72V.
6. When the gearbox is used, these maximums refer to the XCLK. For more information, see the *UltraScale Architecture GTH Transceivers User Guide* (UG576).

Table 105: **GTH Transceiver Transmitter Switching Characteristics**

Symbol	Description	Condition	Min	Typ	Max	Units
F_{GTHTX}	Serial data rate range		0.500	–	F_{GTHMAX}	Gb/s
T_{RTX}	TX rise time	20%–80%	–	21	–	ps
T_{FTX}	TX fall time	80%–20%	–	21	–	ps
T_{LLSKEW}	TX lane-to-lane skew[1]		–	–	500.00	ps
$T_{J16.375}$	Total jitter[2, 4]	16.375 Gb/s	–	–	0.28	UI
$D_{J16.375}$	Deterministic jitter[2, 4]		–	–	0.17	UI

Table 105: **GTH Transceiver Transmitter Switching Characteristics** *(cont'd)*

Symbol	Description	Condition	Min	Typ	Max	Units
$T_{J15.0}$	Total jitter[2, 4]	15.0 Gb/s	–	–	0.28	UI
$D_{J15.0}$	Deterministic jitter[2, 4]		–	–	0.17	UI
$T_{J14.1}$	Total jitter[2, 4]	14.1 Gb/s	–	–	0.28	UI
$D_{J14.1}$	Deterministic jitter[2, 4]		–	–	0.17	UI
$T_{J14.1}$	Total jitter[2, 4]	14.025 Gb/s	–	–	0.28	UI
$D_{J14.1}$	Deterministic jitter[2, 4]		–	–	0.17	UI
$T_{J13.1}$	Total jitter[2, 4]	13.1 Gb/s	–	–	0.28	UI
$D_{J13.1}$	Deterministic jitter[2, 4]		–	–	0.17	UI
$T_{J12.5_QPLL}$	Total jitter[2, 4]	12.5 Gb/s	–	–	0.28	UI
$D_{J12.5_QPLL}$	Deterministic jitter[2, 4]		–	–	0.17	UI
$T_{J12.5_CPLL}$	Total jitter[3, 4]	12.5 Gb/s	–	–	0.33	UI
$D_{J12.5_CPLL}$	Deterministic jitter[3, 4]		–	–	0.17	UI
$T_{J11.3_QPLL}$	Total jitter[2, 4]	11.3 Gb/s	–	–	0.28	UI
$D_{J11.3_QPLL}$	Deterministic jitter[2, 4]		–	–	0.17	UI
$T_{J10.3125_QPLL}$	Total jitter[2, 4]	10.3125 Gb/s	–	–	0.28	UI
$D_{J10.3125_QPLL}$	Deterministic jitter[2, 4]		–	–	0.17	UI
$T_{J10.3125_CPLL}$	Total jitter[3, 4]	10.3125 Gb/s	–	–	0.33	UI
$D_{J10.3125_CPLL}$	Deterministic jitter[3, 4]		–	–	0.17	UI
$T_{J9.953_QPLL}$	Total jitter[2, 4]	9.953 Gb/s	–	–	0.28	UI
$D_{J9.953_QPLL}$	Deterministic jitter[2, 4]		–	–	0.17	UI
$T_{J9.953_CPLL}$	Total jitter[3, 4]	9.953 Gb/s	–	–	0.33	UI
$D_{J9.953_CPLL}$	Deterministic jitter[3, 4]		–	–	0.17	UI
$T_{J8.0}$	Total jitter[3, 4]	8.0 Gb/s	–	–	0.32	UI
$D_{J8.0}$	Deterministic jitter[3, 4]		–	–	0.17	UI
$T_{J6.6}$	Total jitter[3, 4]	6.6 Gb/s	–	–	0.30	UI
$D_{J6.6}$	Deterministic jitter[3, 4]		–	–	0.15	UI
$T_{J5.0}$	Total jitter[3, 4]	5.0 Gb/s	–	–	0.30	UI
$D_{J5.0}$	Deterministic jitter[3, 4]		–	–	0.15	UI
$T_{J4.25}$	Total jitter[3, 4]	4.25 Gb/s	–	–	0.30	UI
$D_{J4.25}$	Deterministic jitter[3, 4]		–	–	0.15	UI
$T_{J4.0}$	Total jitter[3, 4]	4.0 Gb/s	–	–	0.32	UI
$D_{J4.0}$	Deterministic jitter[3, 4]		–	–	0.16	UI
$T_{J3.20}$	Total jitter[3, 4]	3.20 Gb/s[5]	–	–	0.20	UI
$D_{J3.20}$	Deterministic jitter[3, 4]		–	–	0.10	UI
$T_{J2.5}$	Total jitter[3, 4]	2.5 Gb/s[6]	–	–	0.20	UI
$D_{J2.5}$	Deterministic jitter[3, 4]		–	–	0.10	UI
$T_{J1.25}$	Total jitter[3, 4]	1.25 Gb/s[7]	–	–	0.15	UI
$D_{J1.25}$	Deterministic jitter[3, 4]		–	–	0.06	UI

Table 105: **GTH Transceiver Transmitter Switching Characteristics** *(cont'd)*

Symbol	Description	Condition	Min	Typ	Max	Units
T_{J500}	Total jitter[3, 4]	500 Mb/s[8]	–	–	0.10	UI
D_{J500}	Deterministic jitter[3, 4]		–	–	0.03	UI

Notes:

1. Using same REFCLK input with TX phase alignment enabled for up to four consecutive transmitters (one fully populated GTH Quad) at the maximum line rate.
2. Using QPLL_FBDIV = 40, 20-bit internal data width. These values are NOT intended for protocol specific compliance determinations.
3. Using CPLL_FBDIV = 2, 20-bit internal data width. These values are NOT intended for protocol specific compliance determinations.
4. All jitter values are based on a bit-error ratio of 10^{-12}.
5. CPLL frequency at 3.2 GHz and TXOUT_DIV = 2.
6. CPLL frequency at 2.5 GHz and TXOUT_DIV = 2.
7. CPLL frequency at 2.5 GHz and TXOUT_DIV = 4.
8. CPLL frequency at 2.0 GHz and TXOUT_DIV = 8.

Table 106: **GTH Transceiver Receiver Switching Characteristics**

Symbol	Description	Condition	Min	Typ	Max	Units
F_{GTHRX}	Serial data rate		0.500	–	F_{GTHMAX}	Gb/s
R_{XSST}	Receiver spread-spectrum tracking[1]	Modulated at 33 kHz	–5000	–	0	ppm
R_{XRL}	Run length (CID)		–	–	256	UI
$R_{XPPMTOL}$	Data/REFCLK PPM offset tolerance	Bit rates ≤ 6.6 Gb/s	–1250	–	1250	ppm
		Bit rates > 6.6 Gb/s and ≤ 8.0 Gb/s	–700	–	700	ppm
		Bit rates > 8.0 Gb/s	–200	–	200	ppm
SJ Jitter Tolerance[2]						
$J_{T_SJ16.375}$	Sinusoidal jitter (QPLL)[3]	16.375 Gb/s	0.30	–	–	UI
$J_{T_SJ15.0}$	Sinusoidal jitter (QPLL)[3]	15.0 Gb/s	0.30	–	–	UI
$J_{T_SJ14.1}$	Sinusoidal jitter (QPLL)[3]	14.1 Gb/s	0.30	–	–	UI
$J_{T_SJ13.1}$	Sinusoidal jitter (QPLL)[3]	13.1 Gb/s	0.30	–	–	UI
$J_{T_SJ12.5}$	Sinusoidal jitter (QPLL)[3]	12.5 Gb/s	0.30	–	–	UI
$J_{T_SJ11.3}$	Sinusoidal jitter (QPLL)[3]	11.3 Gb/s	0.30	–	–	UI
$J_{T_SJ10.32_QPLL}$	Sinusoidal jitter (QPLL)[3]	10.32 Gb/s	0.30	–	–	UI
$J_{T_SJ10.32_CPLL}$	Sinusoidal jitter (CPLL)[3]	10.32 Gb/s	0.30	–	–	UI
$J_{T_SJ9.953_QPLL}$	Sinusoidal jitter (QPLL)[3]	9.953 Gb/s	0.30	–	–	UI
$J_{T_SJ9.953_CPLL}$	Sinusoidal jitter (CPLL)[3]	9.953 Gb/s	0.30	–	–	UI
$J_{T_SJ8.0}$	Sinusoidal jitter (QPLL)[3]	8.0 Gb/s	0.42	–	–	UI
$J_{T_SJ6.6_CPLL}$	Sinusoidal jitter (CPLL)[3]	6.6 Gb/s	0.44	–	–	UI
$J_{T_SJ5.0}$	Sinusoidal jitter (CPLL)[3]	5.0 Gb/s	0.44	–	–	UI
$J_{T_SJ4.25}$	Sinusoidal jitter (CPLL)[3]	4.25 Gb/s	0.44	–	–	UI
$J_{T_SJ3.2}$	Sinusoidal jitter (CPLL)[3]	3.2 Gb/s[4]	0.45	–	–	UI
$J_{T_SJ2.5}$	Sinusoidal jitter (CPLL)[3]	2.5 Gb/s[5]	0.30	–	–	UI
$J_{T_SJ1.25}$	Sinusoidal jitter (CPLL)[3]	1.25 Gb/s[6]	0.30	–	–	UI
J_{T_SJ500}	Sinusoidal jitter (CPLL)[3]	500 Mb/s[7]	0.30	–	–	UI

Table 106: **GTH Transceiver Receiver Switching Characteristics** *(cont'd)*

Symbol	Description	Condition	Min	Typ	Max	Units
SJ Jitter Tolerance with Stressed Eye[2]						
$J_{T_TJSE3.2}$	Total jitter with stressed eye[8]	3.2 Gb/s	0.70	–	–	UI
$J_{T_TJSE6.6}$		6.6 Gb/s	0.70	–	–	UI
$J_{T_SJSE3.2}$	Sinusoidal jitter with stressed eye[8]	3.2 Gb/s	0.10	–	–	UI
$J_{T_SJSE6.6}$		6.6 Gb/s	0.10	–	–	UI

Notes:
1. Using RXOUT_DIV = 1, 2, and 4.
2. All jitter values are based on a bit error ratio of 10^{-12}.
3. The frequency of the injected sinusoidal jitter is 80 MHz.
4. CPLL frequency at 3.2 GHz and RXOUT_DIV = 2.
5. CPLL frequency at 2.5 GHz and RXOUT_DIV = 2.
6. CPLL frequency at 2.5 GHz and RXOUT_DIV = 4.
7. CPLL frequency at 2.0 GHz and RXOUT_DIV = 8.
8. Composite jitter with RX equalizer enabled. DFE disabled.

GTH Transceiver Electrical Compliance

The *UltraScale Architecture GTH Transceivers User Guide* (UG576) contains recommended use modes that ensure compliance for the protocols listed in the following table. The transceiver wizard provides the recommended settings for those use cases and for protocol specific characteristics.

Table 107: **GTH Transceiver Protocol List**

Protocol	Specification	Serial Rate (Gb/s)	Electrical Compliance
CAUI-10	IEEE 802.3-2012	10.3125	Compliant
nPPI	IEEE 802.3-2012	10.3125	Compliant
10GBASE-KR[1]	IEEE 802.3-2012	10.3125	Compliant
40GBASE-KR	IEEE 802.3-2012	10.3125	Compliant
SFP+	SFF-8431 (SR and LR)	9.95328–11.10	Compliant
XFP	INF-8077i, revision 4.5	10.3125	Compliant
RXAUI	CEI-6G-SR	6.25	Compliant
XAUI	IEEE 802.3-2012	3.125	Compliant
1000BASE-X	IEEE 802.3-2012	1.25	Compliant
5.0G Ethernet	IEEE 802.3bx (PAR)	5	Compliant
2.5G Ethernet	IEEE 802.3bx (PAR)	2.5	Compliant
HiGig, HiGig+, HiGig2	IEEE 802.3-2012	3.74, 6.6	Compliant
OTU2	ITU G.8251	10.709225	Compliant
OTU4 (OTL4.10)	OIF-CEI-11G-SR	11.180997	Compliant
OC-3/12/48/192	GR-253-CORE	0.1555–9.956	Compliant
TFI-5	OIF-TFI5-0.1.0	2.488	Compliant
Interlaken	OIF-CEI-6G, OIF-CEI-11G-SR	4.25–12.5	Compliant
PCIe Gen1, 2, 3	PCI Express base 3.0	2.5, 5.0, and 8.0	Compliant
SDI[2]	SMPTE 424M-2006	0.27–2.97	Compliant

Table 107: **GTH Transceiver Protocol List** *(cont'd)*

Protocol	Specification	Serial Rate (Gb/s)	Electrical Compliance
UHD-SDI[2]	SMPTE ST-2081 6G, SMPTE ST-2082 12G	6 and 12	Compliant
Hybrid memory cube (HMC)	HMC-15G-SR	10, 12.5, and 15.0	Compliant
MoSys Bandwidth Engine	CEI-11-SR and CEI-11-SR (overclocked)	10.3125, 15.5	Compliant
CPRI	CPRI_v_6_1_2014-07-01	0.6144–12.165	Compliant
HDMI[2]	HDMI 2.0	All	Compliant
Passive optical network (PON)	10G-EPON, 1G-EPON, NG-PON2, XG-PON, and 2.5G-PON	0.155–10.3125	Compliant
JESD204a/b	OIF-CEI-6G, OIF-CEI-11G	3.125–12.5	Compliant
Serial RapidIO	RapidIO specification 3.1	1.25–10.3125	Compliant
DisplayPort[2]	DP 1.2B CTS	1.62–5.4	Compliant
Fibre channel	FC-PI-4	1.0625–14.025	Compliant
SATA Gen1, 2, 3	Serial ATA revision 3.0 specification	1.5, 3.0, and 6.0	Compliant
SAS Gen1, 2, 3	T10/BSR INCITS 519	3.0, 6.0, and 12.0	Compliant
SFI-5	OIF-SFI5-01.0	0.625–12.5	Compliant
Aurora	CEI-6G, CEI-11G-LR	up to 11.180997	Compliant

Notes:
1. The transition time of the transmitter is faster than the IEEE Std 802.3-2012 specification.
2. This protocol requires external circuitry to achieve compliance.

GTY Transceiver Specifications

The *UltraScale Architecture and Product Data Sheet: Overview* (DS890) lists the Zynq UltraScale+ MPSoCs that include the GTY transceivers.

GTY Transceiver DC Input and Output Levels

Table 108 summarizes the DC specifications of the GTY transceivers in Zynq UltraScale+ MPSoCs. Consult the *UltraScale Architecture GTY Transceivers User Guide* (UG578) for further details.

Table 108: **GTY Transceiver DC Specifications**

Symbol	DC Parameter	Conditions	Min	Typ	Max	Units
DV_{PPIN}	Differential peak-to-peak input voltage (external AC coupled)	>10.3125 Gb/s	150	–	1250	mV
		6.6 Gb/s to 10.3125 Gb/s	150	–	1250	mV
		≤ 6.6 Gb/s	150	–	2000	mV
V_{IN}	Single-ended input voltage. Voltage measured at the pin referenced to GND.	DC coupled $V_{MGTAVTT}$ = 1.2V	–400	–	$V_{MGTAVTT}$	mV
V_{CMIN}	Common mode input voltage	DC coupled $V_{MGTAVTT}$ = 1.2V	–	2/3 $V_{MGTAVTT}$	–	mV
D_{VPPOUT}	Differential peak-to-peak output voltage[1]	Transmitter output swing is set to `11111`	800	–	–	mV

Table 108: **GTY Transceiver DC Specifications** *(cont'd)*

Symbol	DC Parameter	Conditions	Min	Typ	Max	Units
$V_{CMOUTDC}$	Common mode output voltage: DC coupled (equation based)	When remote RX is terminated to GND	$V_{MGTAVTT}/2 - D_{VPPOUT}/4$			mV
		When remote RX termination is floating	$V_{MGTAVTT} - D_{VPPOUT}/2$			mV
		When remote RX is terminated to V_{RX_TERM}[2]	$V_{MGTAVTT} - \frac{D_{VPPOUT}}{4} - \left(\frac{V_{MGTAVTT} - V_{RX_TERM}}{2}\right)$			mV
$V_{CMOUTAC}$	Common mode output voltage: AC coupled	Equation based	$V_{MGTAVTT} - D_{VPPOUT}/2$			mV
R_{IN}	Differential input resistance		–	100	–	Ω
R_{OUT}	Differential output resistance		–	100	–	Ω
T_{OSKEW}	Transmitter output pair (TXP and TXN) intra-pair skew		–	–	10	ps
C_{EXT}	Recommended external AC coupling capacitor[3]		–	100	–	nF

Notes:

1. The output swing and pre-emphasis levels are programmable using the GTY transceiver attributes discussed in the *UltraScale Architecture GTY Transceivers User Guide* (UG578) and can result in values lower than reported in this table.
2. V_{RX_TERM} is the remote RX termination voltage.
3. Other values can be used as appropriate to conform to specific protocols and standards.

Figure 5: **Single-Ended Peak-to-Peak Voltage**

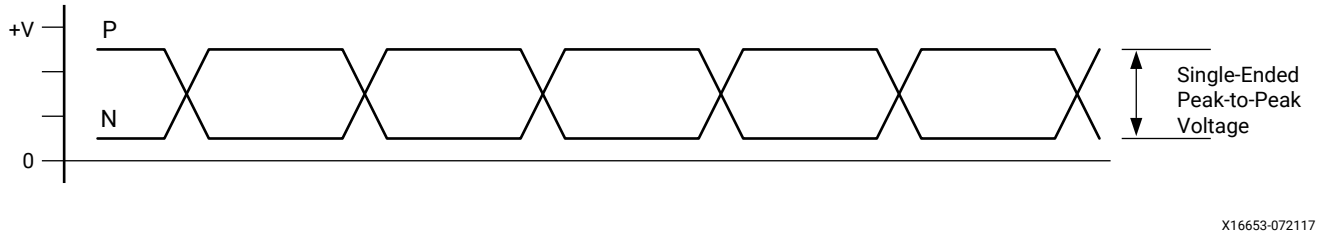

Figure 6: **Differential Peak-to-Peak Voltage**

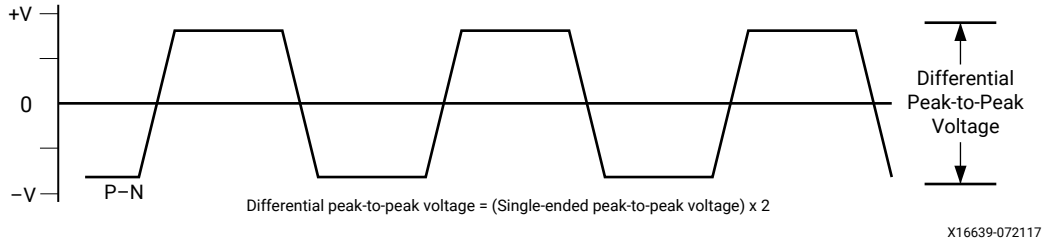

The following tables summarize the DC specifications of the clock input/output levels of the GTY transceivers in Zynq UltraScale+ MPSoCs. Consult the *UltraScale Architecture GTY Transceivers User Guide* (UG578) for further details.

Table 109: **GTY Transceiver Clock DC Input Level Specification**

Symbol	DC Parameter	Min	Typ	Max	Units
V_{IDIFF}	Differential peak-to-peak input voltage	250	–	2000	mV
R_{IN}	Differential input resistance	–	100	–	Ω
C_{EXT}	Required external AC coupling capacitor	–	10	–	nF

Table 110: **GTY Transceiver Clock Output Level Specification**

Symbol	Description	Conditions	Min	Typ	Max	Units
V_{OL}	Output Low voltage for P and N	R_T = 100Ω across P and N signals	100	–	330	mV
V_{OH}	Output High voltage for P and N	R_T = 100Ω across P and N signals	500	–	700	mV
V_{DDOUT}	Differential output voltage (P–N), P = High (N–P), N = High	R_T = 100Ω across P and N signals	300	–	430	mV
V_{CMOUT}	Common mode voltage	R_T = 100Ω across P and N signals	300	–	500	mV

GTY Transceiver Switching Characteristics

Consult the *UltraScale Architecture GTY Transceivers User Guide* (UG578) for further information.

Table 111: **GTY Transceiver Performance**

Symbol	Description	Output Divider	Speed Grade and V_{CCINT} Operating Voltages										Units
			0.90V		0.85V				0.72V				
			-3		-2		-1		-2		-1		
F_{GTYMAX}	GTY maximum line rate		32.75		28.21		25.785		28.21		12.5		Gb/s
F_{GTYMIN}	GTY minimum line rate		0.5		0.5		0.5		0.5		0.5		Gb/s
			Min	Max	Min	Max	Min	Max	Min	Max	Min	Max	
$F_{GTYCRANGE}$	CPLL line rate range[1]	1	4.0	12.5	4.0	12.5	4.0	8.5	4.0	12.5	4.0	8.5	Gb/s
		2	2.0	6.25	2.0	6.25	2.0	4.25	2.0	6.25	2.0	4.25	Gb/s
		4	1.0	3.125	1.0	3.125	1.0	2.125	1.0	3.125	1.0	2.125	Gb/s
		8	0.5	1.5625	0.5	1.5625	0.5	1.0625	0.5	1.5625	0.5	1.0625	Gb/s
		16	N/A										Gb/s
		32	N/A										Gb/s
			Min	Max	Min	Max	Min	Max	Min	Max	Min	Max	
$F_{GTYQRANGE1}$	QPLL0 line rate range[2]	1	19.6	32.75	19.6	28.21	19.6	25.785	19.6	28.21	N/A		Gb/s
		1	9.8	16.375	9.8	16.375	9.8	16.375	9.8	16.375	9.8	12.5	Gb/s
		2	4.9	8.1875	4.9	8.1875	4.9	8.1875	4.9	8.1875	4.9	8.1875	Gb/s
		4	2.45	4.0938	2.45	4.0938	2.45	4.0938	2.45	4.0938	2.45	4.0938	Gb/s
		8	1.225	2.0469	1.225	2.0469	1.225	2.0469	1.225	2.0469	1.225	2.0469	Gb/s
		16	0.6125	1.0234	0.6125	1.0234	0.6125	1.0234	0.6125	1.0234	0.6125	1.0234	Gb/s

Table 111: **GTY Transceiver Performance** *(cont'd)*

Symbol	Description	Output Divider	Speed Grade and V_{CCINT} Operating Voltages										Units
			0.90V		0.85V				0.72V				
			-3		-2		-1		-2		-1		
			Min	Max	Min	Max	Min	Max	Min	Max	Min	Max	
$F_{GTYQRANGE2}$	QPLL1 line rate range[3]	1	16.0	26.0	16.0	26.0	16.0	25.785	16.0	26.0	N/A		Gb/s
		1	8.0	13.0	8.0	13.0	8.0	12.5	8.0	13.0	8.0	12.5	Gb/s
		2	4.0	6.5	4.0	6.5	4.0	6.5	4.0	6.5	4.0	6.5	Gb/s
		4	2.0	3.25	2.0	3.25	2.0	3.25	2.0	3.25	2.0	3.25	Gb/s
		8	1.0	1.625	1.0	1.625	1.0	1.625	1.0	1.625	1.0	1.625	Gb/s
		16	0.5	0.8125	0.5	0.8125	0.5	0.8125	0.5	0.8125	0.5	0.8125	Gb/s
			Min	Max	Min	Max	Min	Max	Min	Max	Min	Max	
$F_{CPLLRANGE}$	CPLL frequency range		2.0	6.25	2.0	6.25	2.0	4.25	2.0	6.25	2.0	4.25	GHz
$F_{QPLL0RANGE}$	QPLL0 frequency range		9.8	16.375	9.8	16.375	9.8	16.375	9.8	16.375	9.8	16.375	GHz
$F_{QPLL1RANGE}$	QPLL1 frequency range		8.0	13.0	8.0	13.0	8.0	13.0	8.0	13.0	8.0	13.0	GHz

Notes:

1. The values listed are the rounded results of the calculated equation (2 × CPLL_Frequency)/Output_Divider.
2. The values listed are the rounded results of the calculated equation (QPLL0_Frequency × RATE)/Output_Divider where RATE is 1 when QPLL0_CLKOUT_RATE is set to HALF and 2 if QPLL0_CLKOUT_RATE is set to FULL.
3. The values listed are the rounded results of the calculated equation (QPLL1_Frequency × RATE)/Output_Divider where RATE is 1 when QPLL1_CLKOUT_RATE is set to HALF and 2 if QPLL1_CLKOUT_RATE is set to FULL.

Table 112: **GTY Transceiver Dynamic Reconfiguration Port (DRP) Switching Characteristics**

Symbol	Description	All Speed Grades	Units
$F_{GTYDRPCLK}$	GTYDRPCLK maximum frequency	250	MHz

Table 113: **GTY Transceiver Reference Clock Switching Characteristics**

Symbol	Description	Conditions	All Speed Grades			Units
			Min	Typ	Max	
F_{GCLK}	Reference clock frequency range		60	–	820	MHz
T_{RCLK}	Reference clock rise time	20% – 80%	–	200	–	ps
T_{FCLK}	Reference clock fall time	80% – 20%	–	200	–	ps
T_{DCREF}	Reference clock duty cycle	Transceiver PLL only	40	50	60	%

Table 114: **GTY Transceiver Reference Clock Oscillator Selection Phase Noise Mask**

Symbol	Description[1, 2]	Offset Frequency	Min	Typ	Max	Units
$QPLL_{REFCLKMASK}$	QPLL0/QPLL1 reference clock select phase noise mask at REFCLK frequency = 156.25 MHz	10 kHz	–	–	–112	dBc/Hz
		100 kHz	–	–	–128	
		1 MHz	–	–	–145	
	QPLL0/QPLL1 reference clock select phase noise mask at REFCLK frequency = 312.5 MHz	10 kHz	–	–	–103	dBc/Hz
		100 kHz	–	–	–123	
		1 MHz	–	–	–143	
	QPLL0/QPLL1 reference clock select phase noise mask at REFCLK frequency = 625 MHz	10 kHz	–	–	–98	dBc/Hz
		100 kHz	–	–	–117	
		1 MHz	–	–	–140	
$CPLL_{REFCLKMASK}$	CPLL reference clock select phase noise mask at REFCLK frequency = 156.25 MHz	10 kHz	–	–	–112	dBc/Hz
		100 kHz	–	–	–128	
		1 MHz	–	–	–145	
		50 MHz	–	–	–145	
	CPLL reference clock select phase noise mask at REFCLK frequency = 312.5 MHz	10 kHz	–	–	–103	dBc/Hz
		100 kHz	–	–	–123	
		1 MHz	–	–	–143	
		50 MHz	–	–	–145	
	CPLL reference clock select phase noise mask at REFCLK frequency = 625 MHz	10 kHz	–	–	–98	dBc/Hz
		100 kHz	–	–	–117	
		1 MHz	–	–	–140	
		50 MHz	–	–	–144	

Notes:

1. For reference clock frequencies not in this table, use the phase-noise mask for the nearest reference clock frequency.
2. This reference clock phase-noise mask is superseded by any reference clock phase-noise mask that is specified in a supported protocol, e.g., PCIe.

Table 115: **GTY Transceiver PLL/Lock Time Adaptation**

Symbol	Description	Conditions	All Speed Grades			Units
			Min	Typ	Max	
T_{LOCK}	Initial PLL lock.		–	–	1	ms
T_{DLOCK}	Clock recovery phase acquisition and adaptation time for decision feedback equalizer (DFE)	After the PLL is locked to the reference clock, this is the time it takes to lock the clock data recovery (CDR) to the data present at the input.	–	50,000	37×10^6	UI
	Clock recovery phase acquisition and adaptation time for low-power mode (LPM) when the DFE is disabled		–	50,000	2.3×10^6	UI

Table 116: **GTY Transceiver User Clock Switching Characteristics**

Symbol	Description[1]	Data Width Conditions (Bit)		Speed Grade and V_{CCINT} Operating Voltages					Units
				0.90V	0.85V		0.72V		
		Internal Logic	Interconnect Logic	-3[2]	-2[2, 3]	-1[4, 5, 6]	-2[3]	-1[5]	
$F_{TXOUTPMA}$	TXOUTCLK maximum frequency sourced from OUTCLKPMA			511.719	511.719	402.891	402.832	322.266	MHz
$F_{RXOUTPMA}$	RXOUTCLK maximum frequency sourced from OUTCLKPMA			511.719	511.719	402.891	402.832	322.266	MHz
$F_{TXOUTPROGDIV}$	TXOUTCLK maximum frequency sourced from TXPROGDIVCLK			511.719	511.719	511.719	511.719	511.719	MHz
$F_{RXOUTPROGDIV}$	RXOUTCLK maximum frequency sourced from RXPROGDIVCLK			511.719	511.719	511.719	511.719	511.719	MHz
F_{TXIN}	TXUSRCLK[7] maximum frequency	16	16, 32	511.719	511.719	390.625	390.625	322.266	MHz
		32	32, 64	511.719	511.719	390.625	390.625	322.266	MHz
		64	64, 128	511.719	440.781	402.891	402.832	195.313	MHz
		20	20, 40	409.375	409.375	312.500	312.500	257.813	MHz
		40	40, 80	409.375	409.375	312.500	350.000	257.813	MHz
		80	80, 160	409.375	352.625	322.313	352.625	156.250	MHz
F_{RXIN}	RXUSRCLK[7] maximum frequency	16	16, 32	511.719	511.719	390.625	390.625	322.266	MHz
		32	32, 64	511.719	511.719	390.625	390.625	322.266	MHz
		64	64, 128	511.719	440.781	402.891	402.832	195.313	MHz
		20	20, 40	409.375	409.375	312.500	312.500	257.813	MHz
		40	40, 80	409.375	409.375	312.500	350.000	257.813	MHz
		80	80, 160	409.375	352.625	322.313	352.625	156.250	MHz
F_{TXIN2}	TXUSRCLK2[7] maximum frequency	16	16	511.719	511.719	390.625	390.625	322.266	MHz
		16	32	255.859	255.859	195.313	195.313	161.133	MHz
		32	32	511.719	511.719	390.625	390.625	322.266	MHz
		32	64	255.859	255.859	195.313	195.313	161.133	MHz
		64	64	511.719	440.781	402.891	402.832	195.313	MHz
		64	128	255.859	220.391	201.445	201.416	97.656	MHz
		20	20	409.375	409.375	312.500	312.500	257.813	MHz
		20	40	204.688	204.688	156.250	156.250	128.906	MHz
		40	40	409.375	409.375	312.500	350.000	257.813	MHz
		40	80	204.688	204.688	156.250	175.000	128.906	MHz
		80	80	409.375	352.625	322.313	352.625	156.250	MHz
		80	160	204.688	176.313	161.156	176.313	78.125	MHz

Table 116: **GTY Transceiver User Clock Switching Characteristics** *(cont'd)*

Symbol	Description[1]	Data Width Conditions (Bit)		Speed Grade and V_{CCINT} Operating Voltages					Units
				0.90V	0.85V		0.72V		
		Internal Logic	Interconnect Logic	-3[2]	-2[2, 3]	-1[4, 5, 6]	-2[3]	-1[5]	
F_{RXIN2}	RXUSRCLK2[7] maximum frequency	16	16	511.719	511.719	390.625	390.625	322.266	MHz
		16	32	255.859	255.859	195.313	195.313	161.133	MHz
		32	32	511.719	511.719	390.625	390.625	322.266	MHz
		32	64	255.859	255.859	195.313	195.313	161.133	MHz
		64	64	511.719	440.781	402.891	402.832	195.313	MHz
		64	128	255.859	220.391	201.445	201.416	97.656	MHz
		20	20	409.375	409.375	312.500	312.500	257.813	MHz
		20	40	204.688	204.688	156.250	156.250	128.906	MHz
		40	40	409.375	409.375	312.500	350.000	257.813	MHz
		40	80	204.688	204.688	156.250	175.000	128.906	MHz
		80	80	409.375	352.625	322.313	352.625	156.250	MHz
		80	160	204.688	176.313	161.156	176.313	78.125	MHz

Notes:

1. Clocking must be implemented as described in the *UltraScale Architecture GTY Transceivers User Guide* (UG578).
2. For speed grades -3E, -2E, and -2I, a 16-bit and 20-bit internal data path can only be used for line rates less than 8.1875 Gb/s.
3. For speed grade -2LE, a 16-bit and 20-bit internal data path can only be used for line rates less than 8.1875 Gb/s when V_{CCINT} = 0.85V or 6.25 Gb/s when V_{CCINT} = 0.72V.
4. For speed grades -1E, -1I, -1Q, and -1M, a 16-bit and 20-bit internal data path can only be used for line rates less than 6.25 Gb/s.
5. For speed grade -1LI, a 16-bit and 20-bit internal data path can only be used for line rates less than 6.25 Gb/s when V_{CCINT} = 0.85V or 5.15625 Gb/s when V_{CCINT} = 0.72V.
6. For the speed grades -1E, -1I, -1Q, and -1M, only a 64- or 80-bit internal data path can be used for line rates above 12.5 Gb/s.
7. When the gearbox is used, these maximums refer to the XCLK. For more information, see the Valid Data Width Combinations for TX Asynchronous Gearbox table in the *UltraScale Architecture GTY Transceivers User Guide* (UG578).

Table 117: **GTY Transceiver Transmitter Switching Characteristics**

Symbol	Description	Condition	Min	Typ	Max	Units
F_{GTYTX}	Serial data rate range		0.500	–	F_{GTYMAX}	Gb/s
T_{RTX}	TX rise time	20%–80%	–	21	–	ps
T_{FTX}	TX fall time	80%–20%	–	21	–	ps
T_{LLSKEW}	TX lane-to-lane skew[1]		–	–	500.00	ps
$T_{J32.75}$	Total jitter[2, 4]	32.75 Gb/s	–	–	0.35	UI
$D_{J32.75}$	Deterministic jitter[2, 4]		–	–	0.19	UI
$T_{J28.21}$	Total jitter[2, 4]	28.21 Gb/s	–	–	0.28	UI
$D_{J28.21}$	Deterministic jitter[2, 4]		–	–	0.17	UI
$T_{J16.375}$	Total jitter[2, 4]	16.375 Gb/s	–	–	0.28	UI
$D_{J16.375}$	Deterministic jitter[2, 4]		–	–	0.17	UI
$T_{J15.0}$	Total jitter[2, 4]	15.0 Gb/s	–	–	0.28	UI
$D_{J15.0}$	Deterministic jitter[2, 4]		–	–	0.17	UI

Table 117: **GTY Transceiver Transmitter Switching Characteristics** *(cont'd)*

Symbol	Description	Condition	Min	Typ	Max	Units
$T_{J14.1}$	Total jitter[2, 4]	14.1 Gb/s	–	–	0.28	UI
$D_{J14.1}$	Deterministic jitter[2, 4]		–	–	0.17	UI
$T_{J14.1}$	Total jitter[2, 4]	14.025 Gb/s	–	–	0.28	UI
$D_{J14.1}$	Deterministic jitter[2, 4]		–	–	0.17	UI
$T_{J13.1}$	Total jitter[2, 4]	13.1 Gb/s	–	–	0.28	UI
$D_{J13.1}$	Deterministic jitter[2, 4]		–	–	0.17	UI
$T_{J12.5_QPLL}$	Total jitter[2, 4]	12.5 Gb/s	–	–	0.28	UI
$D_{J12.5_QPLL}$	Deterministic jitter[2, 4]		–	–	0.17	UI
$T_{J12.5_CPLL}$	Total jitter[3, 4]	12.5 Gb/s	–	–	0.33	UI
$D_{J12.5_CPLL}$	Deterministic jitter[3, 4]		–	–	0.17	UI
$T_{J11.3_QPLL}$	Total jitter[2, 4]	11.3 Gb/s	–	–	0.28	UI
$D_{J11.3_QPLL}$	Deterministic jitter[2, 4]		–	–	0.17	UI
$T_{J10.3125_QPLL}$	Total jitter[2, 4]	10.3125 Gb/s	–	–	0.28	UI
$D_{J10.3125_QPLL}$	Deterministic jitter[2, 4]		–	–	0.17	UI
$T_{J10.3125_CPLL}$	Total jitter[3, 4]	10.3125 Gb/s	–	–	0.33	UI
$D_{J10.3125_CPLL}$	Deterministic jitter[3, 4]		–	–	0.17	UI
$T_{J9.953_QPLL}$	Total jitter[2, 4]	9.953 Gb/s	–	–	0.28	UI
$D_{J9.953_QPLL}$	Deterministic jitter[2, 4]		–	–	0.17	UI
$T_{J9.953_CPLL}$	Total jitter[3, 4]	9.953 Gb/s	–	–	0.33	UI
$D_{J9.953_CPLL}$	Deterministic jitter[3, 4]		–	–	0.17	UI
$T_{J8.0}$	Total jitter[3, 4]	8.0 Gb/s	–	–	0.32	UI
$D_{J8.0}$	Deterministic jitter[3, 4]		–	–	0.17	UI
$T_{J6.6}$	Total jitter[3, 4]	6.6 Gb/s	–	–	0.30	UI
$D_{J6.6}$	Deterministic jitter[3, 4]		–	–	0.15	UI
$T_{J5.0}$	Total jitter[3, 4]	5.0 Gb/s	–	–	0.30	UI
$D_{J5.0}$	Deterministic jitter[3, 4]		–	–	0.15	UI
$T_{J4.25}$	Total jitter[3, 4]	4.25 Gb/s	–	–	0.30	UI
$D_{J4.25}$	Deterministic jitter[3, 4]		–	–	0.15	UI
$T_{J3.20}$	Total jitter[3, 4]	3.20 Gb/s[5]	–	–	0.20	UI
$D_{J3.20}$	Deterministic jitter[3, 4]		–	–	0.10	UI
$T_{J2.5}$	Total jitter[3, 4]	2.5 Gb/s[6]	–	–	0.20	UI
$D_{J2.5}$	Deterministic jitter[3, 4]		–	–	0.10	UI
$T_{J1.25}$	Total jitter[3, 4]	1.25 Gb/s[7]	–	–	0.15	UI
$D_{J1.25}$	Deterministic jitter[3, 4]		–	–	0.06	UI

Table 117: **GTY Transceiver Transmitter Switching Characteristics** *(cont'd)*

Symbol	Description	Condition	Min	Typ	Max	Units
T_{J500}	Total jitter[3, 4]	500 Mb/s[8]	–	–	0.10	UI
D_{J500}	Deterministic jitter[3, 4]		–	–	0.03	UI

Notes:

1. Using same REFCLK input with TX phase alignment enabled for up to four consecutive transmitters (one fully populated GTY Quad) at maximum line rate.
2. Using QPLL_FBDIV = 40, 20-bit internal data width. These values are NOT intended for protocol specific compliance determinations.
3. Using CPLL_FBDIV = 2, 20-bit internal data width. These values are NOT intended for protocol specific compliance determinations.
4. All jitter values are based on a bit-error ratio of 10^{-12}.
5. CPLL frequency at 3.2 GHz and TXOUT_DIV = 2.
6. CPLL frequency at 2.5 GHz and TXOUT_DIV = 2.
7. CPLL frequency at 2.5 GHz and TXOUT_DIV = 4.
8. CPLL frequency at 2.0 GHz and TXOUT_DIV = 8.

Table 118: **GTY Transceiver Receiver Switching Characteristics**

Symbol	Description	Condition	Min	Typ	Max	Units
F_{GTYRX}	Serial data rate		0.500	–	F_{GTYMAX}	Gb/s
R_{XSST}	Receiver spread-spectrum tracking[1]	Modulated at 33 kHz	–5000	–	0	ppm
R_{XRL}	Run length (CID)		–	–	256	UI
$R_{XPPMTOL}$	Data/REFCLK PPM offset tolerance	Bit rates ≤ 6.6 Gb/s	–1250	–	1250	ppm
		Bit rates > 6.6 Gb/s and ≤ 8.0 Gb/s	–700	–	700	ppm
		Bit rates > 8.0 Gb/s	–200	–	200	ppm
SJ Jitter Tolerance[2]						
$J_{T_SJ32.75}$	Sinusoidal jitter (QPLL)[3]	32.75 Gb/s	0.25	–	–	UI
$J_{T_SJ28.21}$	Sinusoidal jitter (QPLL)[3]	28.21 Gb/s	0.30	–	–	UI
$J_{T_SJ16.375}$	Sinusoidal jitter (QPLL)[3]	16.375 Gb/s	0.30	–	–	UI
$J_{T_SJ15.0}$	Sinusoidal jitter (QPLL)[3]	15.0 Gb/s	0.30	–	–	UI
$J_{T_SJ14.1}$	Sinusoidal jitter (QPLL)[3]	14.1 Gb/s	0.30	–	–	UI
$J_{T_SJ13.1}$	Sinusoidal jitter (QPLL)[3]	13.1 Gb/s	0.30	–	–	UI
$J_{T_SJ12.5}$	Sinusoidal jitter (QPLL)[3]	12.5 Gb/s	0.30	–	–	UI
$J_{T_SJ11.3}$	Sinusoidal jitter (QPLL)[3]	11.3 Gb/s	0.30	–	–	UI
$J_{T_SJ10.32_QPLL}$	Sinusoidal jitter (QPLL)[3]	10.32 Gb/s	0.30	–	–	UI
$J_{T_SJ10.32_CPLL}$	Sinusoidal jitter (CPLL)[3]	10.32 Gb/s	0.30	–	–	UI
$J_{T_SJ9.953_QPLL}$	Sinusoidal jitter (QPLL)[3]	9.953 Gb/s	0.30	–	–	UI
$J_{T_SJ9.953_CPLL}$	Sinusoidal jitter (CPLL)[3]	9.953 Gb/s	0.30	–	–	UI
$J_{T_SJ8.0}$	Sinusoidal jitter (CPLL)[3]	8.0 Gb/s	0.42	–	–	UI
$J_{T_SJ6.6}$	Sinusoidal jitter (CPLL)[3]	6.6 Gb/s	0.44	–	–	UI
$J_{T_SJ5.0}$	Sinusoidal jitter (CPLL)[3]	5.0 Gb/s	0.44	–	–	UI
$J_{T_SJ4.25}$	Sinusoidal jitter (CPLL)[3]	4.25 Gb/s	0.44	–	–	UI
$J_{T_SJ3.2}$	Sinusoidal jitter (CPLL)[3]	3.2 Gb/s[4]	0.45	–	–	UI
$J_{T_SJ2.5}$	Sinusoidal jitter (CPLL)[3]	2.5 Gb/s[5]	0.30	–	–	UI
$J_{T_SJ1.25}$	Sinusoidal jitter (CPLL)[3]	1.25 Gb/s[6]	0.30	–	–	UI
J_{T_SJ500}	Sinusoidal jitter (CPLL)[3]	500 Mb/s[7]	0.30	–	–	UI

Table 118: **GTY Transceiver Receiver Switching Characteristics** *(cont'd)*

Symbol	Description	Condition	Min	Typ	Max	Units
SJ Jitter Tolerance with Stressed Eye[2]						
$J_{T_TJSE3.2}$	Total jitter with stressed eye[8]	3.2 Gb/s	0.70	–	–	UI
$J_{T_TJSE6.6}$		6.6 Gb/s	0.70	–	–	UI
$J_{T_SJSE3.2}$	Sinusoidal jitter with stressed eye[8]	3.2 Gb/s	0.10	–	–	UI
$J_{T_SJSE6.6}$		6.6 Gb/s	0.10	–	–	UI

Notes:
1. Using RXOUT_DIV = 1, 2, and 4.
2. All jitter values are based on a bit error ratio of 10^{-12}.
3. The frequency of the injected sinusoidal jitter is 80 MHz.
4. CPLL frequency at 3.2 GHz and RXOUT_DIV = 2.
5. CPLL frequency at 2.5 GHz and RXOUT_DIV = 2.
6. CPLL frequency at 2.5 GHz and RXOUT_DIV = 4.
7. CPLL frequency at 2.0 GHz and RXOUT_DIV = 8.
8. Composite jitter with RX equalizer enabled. DFE disabled.

GTY Transceiver Electrical Compliance

The *UltraScale Architecture GTY Transceivers User Guide* (UG578) contains recommended use modes that ensure compliance for the protocols listed in the following table. The transceiver wizard provides the recommended settings for those use cases and for protocol specific characteristics.

Table 119: **GTY Transceiver Protocol List**

Protocol	Specification	Serial Rate (Gb/s)	Electrical Compliance
CAUI-4	IEEE 802.3-2012	25.78125	Compliant
28 Gb/s backplane	CEI-25G-LR	25–28.05	Compliant
Interlaken	OIF-CEI-6G, OIF-CEI-11GSR, OIF-CEI-28G-MR	4.25–25.78125	Compliant
100GBASE-KR4	IEEE 802.3bj-2014, CEI-25G-LR	25.78125	Compliant[1]
100GBASE-CR4	IEEE 802.3bj-2014, CEI-25G-LR	25.78125	Compliant[1]
50GBASE-KR4	IEEE 802.3by-2014, CEI-25G-LR	25.78125	Compliant[1]
50GBASE-CR4	IEEE 802.3by-2014, CEI-25G-LR	25.78125	Compliant[1]
25GBASE-KR4	IEEE 802.3by-2014, CEI-25G-LR	25.78125	Compliant[1]
25GBASE-CR4	IEEE 802.3by-2014, CEI-25G-LR	25.78125	Compliant[1]
OTU4 (OTL4.4) CFP2	OIF-CEI-28G-VSR	27.952493–32.75	Compliant
OTU4 (OTL4.4) CFP	OIF-CEI-11G-MR	11.18–13.1	Compliant
CAUI-10	IEEE 802.3-2012	10.3125	Compliant
nPPI	IEEE 802.3-2012	10.3125	Compliant
10GBASE-KR[2]	IEEE 802.3-2012	10.3125	Compliant
SFP+	SFF-8431 (SR and LR)	9.95328–11.10	Compliant
XFP	INF-8077i, revision 4.5	10.3125	Compliant
RXAUI	CEI-6G-SR	6.25	Compliant
XAUI	IEEE 802.3-2012	3.125	Compliant
1000BASE-X	IEEE 802.3-2012	1.25	Compliant

Table 119: **GTY Transceiver Protocol List** *(cont'd)*

Protocol	Specification	Serial Rate (Gb/s)	Electrical Compliance
5.0G Ethernet	IEEE 802.3bx (PAR)	5	Compliant
2.5G Ethernet	IEEE 802.3bx (PAR)	2.5	Compliant
HiGig, HiGig+, HiGig2	IEEE 802.3-2012	3.74, 6.6	Compliant
QSGMII	QSGMII v1.2 (Cisco System, ENG-46158)	5	Compliant
OTU2	ITU G.8251	10.709225	Compliant
OTU4 (OTL4.10)	OIF-CEI-11G-SR	11.180997	Compliant
OC-3/12/48/192	GR-253-CORE	0.1555–9.956	Compliant
PCIe Gen1, 2, 3	PCI Express base 3.0	2.5, 5.0, and 8.0	Compliant
SDI[3]	SMPTE 424M-2006	0.27–2.97	Compliant
UHD-SDI[3]	SMPTE ST-2081 6G, SMPTE ST-2082 12G	6 and 12	Compliant
Hybrid memory cube (HMC)	HMC-15G-SR	10, 12.5, and 15.0	Compliant
MoSys bandwidth engine	CEI-11-SR and CEI-11-SR (overclocked)	10.3125, 15.5	Compliant
CPRI	CPRI_v_6_1_2014-07-01	0.6144–12.165	Compliant
Passive optical network (PON)	10G-EPON, 1G-EPON, NG-PON2, XG-PON, and 2.5G-PON	0.155–10.3125	Compliant
JESD204a/b	OIF-CEI-6G, OIF-CEI-11G	3.125–12.5	Compliant
Serial RapidIO	RapidIO specification 3.1	1.25–10.3125	Compliant
DisplayPort	DP 1.2B CTS	1.62–5.4	Compliant[3]
Fibre channel	FC-PI-4	1.0625–14.025	Compliant
SATA Gen1, 2, 3	Serial ATA revision 3.0 specification	1.5, 3.0, and 6.0	Compliant
SAS Gen1, 2, 3	T10/BSR INCITS 519	3.0, 6.0, and 12.0	Compliant
SFI-5	OIF-SFI5-01.0	0.625 - 12.5	Compliant
Aurora	CEI-6G, CEI-11G-LR	All rates	Compliant

Notes:
1. 25 dB loss at Nyquist without FEC.
2. The transition time of the transmitter is faster than the IEEE Std 802.3-2012 specification.
3. This protocol requires external circuitry to achieve compliance.

Integrated Interface Block for Interlaken

More information and documentation on solutions using the integrated interface block for Interlaken can be found at UltraScale+ Interlaken. The *UltraScale Architecture and Product Data Sheet: Overview* (DS890) lists how many blocks are in each Zynq UltraScale+ MPSoC. This section describes the following Interlaken configurations.

- 12 x 12.5 Gb/s protocol and lane logic mode (Table 120).
- 6 x 25.78125 Gb/s and 6 x 28.21 Gb/s protocol and lane logic mode (Table 121).
- 12 x 25.78125 Gb/s lane logic only mode (Table 122).

Table 120: **Maximum Performance for Interlaken 12 x 12.5 Gb/s Protocol and Lane Logic Mode Designs**

Symbol	Description	Speed Grade and V_{CCINT} Operating Voltages										Units
		0.90V		0.85V				0.72V				
		-3		-2		-1		-2		-1		
$F_{RX_SERDES_CLK}$	Receive serializer/ deserializer clock	195.32		195.32		195.32		195.32		195.32		MHz
$F_{TX_SERDES_CLK}$	Transmit serializer/ deserializer clock	195.32		195.32		195.32		195.32		195.32		MHz
F_{DRP_CLK}	Dynamic reconfiguration port clock	250.00		250.00		250.00		250.00		250.00		MHz
		Min[1]	Max	Min[1]	Max	Min[1]	Max	Min[1]	Max	Min[1]	Max	
F_{CORE_CLK}	Interlaken core clock	300.00	322.27	300.00	322.27	300.00	322.27	300.00	322.27	300.00	322.27	MHz
F_{LBUS_CLK}	Interlaken local bus clock	300.00	322.27	300.00	322.27	300.00	322.27	300.00	322.27	300.00	322.27	MHz

Notes:

1. These are the minimum clock frequencies at the maximum lane performance.

Table 121: **Maximum Performance for Interlaken 6 x 25.78125 Gb/s and 6 x 28.21 Gb/s Protocol and Lane Logic Mode Designs**

Symbol	Description	Speed Grade and V_{CCINT} Operating Voltages										Units
		0.90V		0.85V				0.72V				
		-3[1]		-2[1]		-1		-2		-1		
$F_{RX_SERDES_CLK}$	Receive serializer/ deserializer clock	440.79		440.79		N/A		402.84		N/A		MHz
$F_{TX_SERDES_CLK}$	Transmit serializer/ deserializer clock	440.79		440.79		N/A		402.84		N/A		MHz
F_{DRP_CLK}	Dynamic reconfiguration port clock	250.00		250.00		N/A		250.00		N/A		MHz
		Min[2]	Max	Min[2]	Max	Min	Max	Min[2]	Max	Min	Max	
F_{CORE_CLK}	Interlaken core clock	412.50[3]	479.20	412.50[3]	479.20	N/A		412.50	429.69	N/A		MHz
F_{LBUS_CLK}	Interlaken local bus clock	300.00[4]	349.52	300.00[4]	349.52	N/A		300.00	349.52	N/A		MHz

Notes:

1. 6 x 28.21 mode is only supported in the -2 (V_{CCINT} = 0.85V) and -3 (V_{CCINT} = 0.90V) speed grades.
2. These are the minimum clock frequencies at the maximum lane performance.
3. The minimum value for CORE_CLK is 451.36 MHz for the 6 x 28.21 Gb/s protocol.
4. The minimum value for LBUS_CLK is 330.00 MHz for the 6 x 28.21 Gb/s protocol.

Table 122: **Maximum Performance for Interlaken 12 x 25.78125 Gb/s Lane Logic Only Mode Designs**

Symbol	Description	Speed Grade and V_{CCINT} Operating Voltages					Units
		0.90V	0.85V		0.72V		
		-3	-2	-1	-2	-1	
$F_{RX_SERDES_CLK}$	Receive serializer/ deserializer clock	402.84	402.84	N/A	N/A	N/A	MHz
$F_{TX_SERDES_CLK}$	Transmit serializer/ deserializer clock	402.84	402.84	N/A	N/A	N/A	MHz
F_{DRP_CLK}	Dynamic reconfiguration port clock	250.00	250.00	N/A	N/A	N/A	MHz
F_{CORE_CLK}	Interlaken core clock	412.50	412.50	N/A	N/A	N/A	MHz
F_{LBUS_CLK}	Interlaken local bus clock	349.52	349.52	N/A	N/A	N/A	MHz

Integrated Interface Block for 100G Ethernet MAC and PCS

More information and documentation on solutions using the integrated 100 Gb/s Ethernet block can be found at UltraScale+ Integrated 100G Ethernet MAC/PCS. The *UltraScale Architecture and Product Data Sheet: Overview* (DS890) lists how many blocks are in each Zynq UltraScale+ MPSoC.

Table 123: **Maximum Performance for 100G Ethernet Designs**

Symbol	Description	Speed Grade and V_{CCINT} Operating Voltages					Units
		0.90V	0.85V		0.72V		
		-3	-2	-1	-2	-1	
CAUI-10 Mode							
F_{TX_CLK}	Transmit clock	390.625	390.625	322.266	322.266	322.266	MHz
F_{RX_CLK}	Receive clock	390.625	390.625	322.266	322.266	322.266	MHz
$F_{RX_SERDES_CLK}$	Receive serializer/deserializer clock	390.625	390.625	322.266	322.266	322.266	MHz
F_{DRP_CLK}	Dynamic reconfiguration port clock	250.00	250.00	250.00	250.00	250.00	MHz
CAUI-4, CAUI-4 + RS-FEC, and RS-FEC Transcode Bypass Modes							
F_{TX_CLK}	Transmit clock	390.625	322.266	322.266	322.266	N/A	MHz
F_{RX_CLK}	Receive clock	390.625	322.266	322.266	322.266	N/A	MHz
$F_{RX_SERDES_CLK}$	Receive serializer/deserializer clock	390.625	322.266	322.266	322.266	N/A	MHz
F_{DRP_CLK}	Dynamic reconfiguration port clock	250.00	250.00	250.00	250.00	N/A	MHz

Integrated Interface Block for PCI Express Designs

More information and documentation on solutions for PCI Express® designs can be found at PCI Express. The *UltraScale Architecture and Product Data Sheet: Overview* (DS890) lists how many blocks are in each Zynq UltraScale+ MPSoC.

Table 124: **Maximum Performance for PCI Express Designs**

Symbol	Description	Speed Grade and V_{CCINT} Operating Voltages					Units
		0.90V	0.85V		0.72V		
		-3	-2	-1	-2	-1	
$F_{PIPECLK}$	Pipe clock maximum frequency	250.00	250.00	250.00	250.00	250.00	MHz
$F_{CORECLK}$	Core clock maximum frequency	500.00	500.00	500.00	250.00	250.00	MHz
F_{DRPCLK}	DRP clock maximum frequency	250.00	250.00	250.00	250.00	250.00	MHz
$F_{MCAPCLK}$	MCAP clock maximum frequency	125.00	125.00	125.00	125.00	125.00	MHz

Video Codec Performance

The *UltraScale Architecture and Product Data Sheet: Overview* (DS890) lists the Zynq UltraScale+ MPSoC EV devices that include the Video Codec unit (VCU).

Table 125: **VCU Performance**

Description	Speed Grade and V_{CCINT} Operating Voltages[1]					Units
	0.90V	0.85V		0.72V		
	-3	-2	-1	-2	-1	
Video Codec encoder/decoder block maximum frequency (H.264/5 10-bit 4:2:2, UHD 3840 x 2160)	667	667	667	667	667	MHz
Video Codec encoder/decoder block maximum frequency (H.264/5 10-bit 4:2:2, DCI 4k (4096 x 2160)[2]	712	712	N/A	712	N/A	MHz

Notes:

1. The supply voltage for the VCU (V_{CCINT_VCU}) is specified in Table 2.
2. DCI 4k is supported for frame rates of 60 Hz using an encoder/decoder block frequency of 712 MHz.

PL System Monitor Specifications

Table 126: **PL SYSMON Specifications**

Parameter	Symbol	Comments/Conditions	Min	Typ	Max	Units
V_{CCADC} = 1.8V ±3%, V_{REFP} = 1.25V, V_{REFN} = 0V, ADCCLK = 5.2 MHz, T_j = –40°C to 100°C, typical values at T_j = 40°C						
ADC Accuracy[1]						
Resolution			10	–	–	Bits
Integral nonlinearity[2]	INL		–	–	±1.5	LSBs
Differential nonlinearity	DNL	No missing codes, guaranteed monotonic	–	–	±1	LSBs
Offset error		Offset calibration enabled	–	–	±2	LSBs
Gain error			–	–	±0.4	%
Sample rate			–	–	0.2	MS/s
RMS code noise		External 1.25V reference	–	–	1	LSBs
		On-chip reference	–	1	–	LSBs
ADC Accuracy at Extended Temperatures						
Resolution		T_j = –55°C to 125°C	10	–	–	Bits

Table 126: **PL SYSMON Specifications** *(cont'd)*

Parameter	Symbol	Comments/Conditions	Min	Typ	Max	Units
Integral nonlinearity[2]	INL	T_j = –55°C to 125°C	–	–	±1.5	LSBs
Differential nonlinearity	DNL	No missing codes, guaranteed monotonic T_j = –55°C to 125°C	–	–	±1	
Analog Inputs[2]						
ADC input ranges		Unipolar operation	0	–	1	V
		Bipolar operation	–0.5	–	+0.5	V
		Unipolar common mode range (FS input)	0	–	+0.5	V
		Bipolar common mode range (FS input)	+0.5	–	+0.6	V
Maximum external channel input ranges		Adjacent channels set within these ranges should not corrupt measurements on adjacent channels	–0.1	–	V_{CCADC}	V
On-Chip Sensor Accuracy						
Temperature sensor error[1, 3]		T_j = –55°C to 125°C (with external REF)	–	–	±3	°C
		T_j = –55°C to 110°C (with internal REF)	–	–	±3.5	°C
		T_j = 110°C to 125°C (with internal REF)	–	–	±5	°C
Supply sensor error[4]		Supply voltages 0.72V to 1.2V, T_j = –40°C to 100°C (with external REF)	–	–	±0.5	%
		Supply voltages 0.72V to 1.2V, T_j = –55°C to 125°C (with external REF)	–	–	±1.0	%
		All other supply voltages, T_j = –40°C to 100°C (with external REF)	–	–	±1.0	%
		All other supply voltages, T_j = –55°C to 125°C (with external REF)	–	–	±2.0	%
		Supply voltages 0.72V to 1.2V, T_j = –40°C to 100°C (with internal REF)	–	–	±1.0	%
		Supply voltages 0.72V to 1.2V, T_j = –55°C to 125°C (with internal REF)	–	–	±2.0	%
		All other supply voltages, T_j = –40°C to 100°C (with internal REF)	–	–	±1.5	%
		All other supply voltages, T_j = –55°C to 125°C (with internal REF)	–	–	±2.5	%
Conversion Rate[5]						
Conversion time—continuous	t_{CONV}	Number of ADCCLK cycles	26	–	32	Cycles
Conversion time—event	t_{CONV}	Number of ADCCLK cycles	–	–	21	Cycles
DRP clock frequency	DCLK	DRP clock frequency	8	–	250	MHz
ADC clock frequency	ADCCLK	Derived from DCLK	1	–	5.2	MHz
DCLK duty cycle			40	–	60	%
SYSMON Reference[6]						
External reference	V_{REFP}	Externally supplied reference voltage	1.20	1.25	1.30	V

Table 126: **PL SYSMON Specifications** *(cont'd)*

Parameter	Symbol	Comments/Conditions	Min	Typ	Max	Units
On-chip reference		Ground V_{REFP} pin to AGND, T_j = –40°C to 100°C	1.2375	1.25	1.2625	V
		Ground V_{REFP} pin to AGND, T_j = –55°C to 125°C	1.225	1.25	1.275	V

Notes:

1. ADC offset errors are removed by enabling the ADC automatic offset calibration feature. The values are specified for when this feature is enabled.
2. See the Analog Input section in the *UltraScale Architecture System Monitor User Guide* (UG580).
3. When reading temperature values directly from the PMBus interface, the SYSMON has a +4°C offset due to the transfer function used by the PMBus application. For example, the external REF temperature sensor error's range of ±3°C becomes +1°C to +7°C when the temperature is read through the PMBus interface.
4. Supply sensor offset and gain errors are removed by enabling the automatic offset and gain calibration feature. The values are specified for when this feature is enabled.
5. See the Adjusting the Acquisition Settling Time section in the *UltraScale Architecture System Monitor User Guide* (UG580).
6. Any variation in the reference voltage from the nominal V_{REFP} = 1.25V and V_{REFN} = 0V will result in a deviation from the ideal transfer function. This also impacts the accuracy of the internal sensor measurements (i.e., temperature and power supply). However, for external ratiometric type applications allowing reference to vary by ±4% is permitted.

PL SYSMON I2C/PMBus Interfaces

Table 127: **PL SYSMON I2C Fast Mode Interface Switching Characteristics**

Symbol	Description[1]	Min	Max	Units
T_{SMFCKL}	SCL Low time	1.3	–	µs
T_{SMFCKH}	SCL High time	0.6	–	µs
T_{SMFCKO}	SDAO clock-to-out delay	–	900	ns
T_{SMFDCK}	SDAI setup time	100	–	ns
F_{SMFCLK}	SCL clock frequency	–	400	kHz

Notes:

1. The test conditions are configured to the LVCMOS 1.8V I/O standard.

Table 128: **PL SYSMON I2C Standard Mode Interface Switching Characteristics**

Symbol	Description[1]	Min	Max	Units
T_{SMSCKL}	SCL Low time	4.7	–	µs
T_{SMSCKH}	SCL High time	4.0	–	µs
T_{SMSCKO}	SDAO clock-to-out delay	–	3450	ns
T_{SMSDCK}	SDAI setup time	250	–	ns
F_{SMSCLK}	SCL clock frequency	–	100	kHz

Notes:

1. The test conditions are configured to the LVCMOS 1.8V I/O standard.

Configuration Switching Characteristics

Table 129: **Configuration Switching Characteristics**

Symbol	Description	Speed Grade and V_{CCINT} Operating Voltages					Units
		0.90V	0.85V		0.72V		
		-3	-2	-1	-2	-1	
PL Power-up Timing Characteristics							
T_{PL}	PS_PROG_B PL latency	7.5	7.5	7.5	7.5	7.5	ms, Max
T_{POR}[1, 2]	Power-on reset from PL power-on to PL ready to configure (40 ms ramp rate time)	65	65	65	65	65	ms, Max
		0	0	0	0	0	ms, Min
	Power-on reset from PL power-on to PL ready to configure with POR override (2 ms ramp rate time)	15	15	15	15	15	ms, Max
		5	5	5	5	5	ms, Min
$T_{PS_PROG_B}$	PL program pulse width	250	250	250	250	250	ns, Min
Internal Configuration Access Port							
F_{ICAPCK}	Internal configuration access port (ICAPE3)	200	200	200	150	150	MHz, Max
DNA Port Switching							
F_{DNACK}	DNA port frequency (DNA_PORT)	200	200	200	175	175	MHz, Max
STARTUPE3 Ports							
$F_{CFGMCLK}$	STARTUPE3 CFGMCLK output frequency	50.00	50.00	50.00	50.00	50.00	MHz, Typ
$F_{CFGMCLKTOL}$	STARTUPE3 CFGMCLK output frequency tolerance	±15	±15	±15	±15	±15	%, Max
T_{DCI_MATCH}	Specifies a stall in the startup cycle until the digitally controlled impedance (DCI) match signals are asserted	4	4	4	4	4	ms, Max

Notes:

1. The T_{POR} specification begins when the last of the monitored supplies (V_{CCINT}, V_{CCAUX}, V_{CCBRAM}) reaches 95% of its recommended operating condition voltage.
2. The POR override (POR_OVERRIDE pin tied to V_{CCINT}) is applicable only when the monitored supplies ramp within the specified time.

Revision History

Date	Version	Description of Revisions
3/13/2020	1.17	Removed the XAZU7EV and XAZU11EG in the -1LI (V_{CCINT} = 0.72V) speed/temperature grades because they were incorrectly added in the previous version. The XAZU7EV and XAZU11EG in the -1I speed/temperature grade was moved back to advance in Table 26 and Table 27. Updated Table 25 to Vivado Design Suite 2019.2.2 v1.27. Added Note 10 to Table 17. Revised symbol and description of IOPLL_TO_FPD maximum frequency in Table 38. Increased the maximum line rate of the QPLL0 -1 (V_{CCINT} = 0.85V) output divider 1 in Table 111 and updated Notes 2 and 3.
7/19/2019	1.16	Added the production released XAZU7EV and XAZU11EG devices in the -1I (V_{CCINT} = 0.85V), -1Q (V_{CCINT} = 0.85V), and -1LI (V_{CCINT} = 0.72V) speed/temperature grades to Table 25, Table 26, and Table 27 in Vivado Design Suite 2019.1.1 v1.26. Added Note 7 to Vivado Design Suite v2019.1.1 or later to increase the performance of the MIPI PHY transmitter/receiver in . Added the capability for XC and XA devices designed using Table 72.

Date	Version	Description of Revisions
6/11/2019	1.15	Added the production released XQZU3, XQZU9, XQZU11, and XQZU19 devices throughout data sheet (including adding SFRA484, FFRB1517, and FFRC1760 packages). Updated the devices listed in Table 25 to Vivado Design Suite 2019.1 v1.25 Revised minimum PS DDR data rates for all I-grade devices in Table 30: PS DDR Performance. Updated Note 1 in Table 35: PS RTC Crystal Requirements. . Added the capability for XC and XAAdded -1Q and -1M to Note 4 in Table 104: GTH Transceiver User Clock Switching Characteristics. Removed PCI Express Gen4 support in Table 124: Maximum Performance for PCI Express Designs. Updated Notes 5 and 7 in Table 30. Updated the Video Codec Performance table.
11/15/2018	1.14	Added the production released XQZU5EV, XQZU7EV, and XQZU15EG devices in the -2I, -1I, -1M, and -1LI speed/temperature grades to Table 25, Table 26, and Table 27 in Vivado Design Suite 2018.2.2 v1.22. Updated Note 3 in Table 6, Table 7, Table 8. Updated the V_{IDIFF} description in Table 24. In Table 69, revised the Supply Sensor Error T_j conditions to –55°C. Added the SFRC784, FFRB900, FFRB1156, and FFRC1156 packages to Table 1, Table 2, Table 30, Table 74, and Table 99, and the Integrated Interface Block for Interlaken section. Updated the speed grade notes in Table 116. Add the XQZU5EV, XQZU7EV, and XQZU15EG devices to Table 3, Table 9, Table 10, Table 87, Table 88, Table 89, Table 91, Table 92, and Table 95.
8/01/2018	1.13	Updated Table 25, Table 26, and Table 27 to production release the XCZU4EG, XCZU4EV, XCZU5EG, XCZU5EV, XCZU6EG, XCZU7EG, XCZU7EV, and XCZU9EG devices in the -3E speed/temperature grade and in Vivado Design Suite 2018.2.1 v1.21. In Table 71, added Note 5 to the LVDS RX DDR maximum data. In Table 123, revised the calculated values from 322.223 to 322.266. In Table 129, added Notes 1 and 2.
6/18/2018	1.12	Updated Table 25, Table 26, and Table 27 to production release the XAZU4EV and XAZU5EV devices in the -1Q speed/temperature grade in Vivado Design Suite 2018.2 v1.20. In DC Characteristics Over Recommended Operating Conditions, clarified the descriptions. Revised the speed grade -1 (V_{CCINT} = 0.85) F_{GTYMAX} in Table 111, which also revised values in Table 116 and added Note 6.
4/09/2018	1.11	Updated Table 25, Table 26, and Table 27 to production release the XCZU11EG,XCZU15EG, XCZU17EG, and XCZU19EG devices in the -3E speed/temperature grade in Vivado Design Suite 2018.1 v1.19. Added the Conversion Rate section to Table 69. Added Table 90 and Table 94. Added Note 2 and 3 to Table 93. Revised Table 123 to add specifc mode specifications and remove Notes 1 and 2.
2/07/2018	1.10	Added the XAZU4EV and XAZU5EV devices to many tables. In Table 2, revised the V_{CCINT_VCU} specifications, added automotive (Q) temperature to T_J, and updated Note 5. Added the -1Q note to Table 6, Table 7, and Table 8. Updated Table 25, Table 26, and Table 27 to production for the following devices/speed/temperature grades in Vivado Design Suite 2017.4.1 v1.18. XCZU4CG/XCZU4EG/XCZU4EV: -2LE and -1LI XCZU5CG/XCZU5EG/XCZU5EV: -2LE and -1LI XCZU7CG/XCZU7EG/XCZU7EV: -2LE and -1LI XCZU11EG: -2LE and -1LI XCZU4EV and XAZU5EV: -1LI In Vivado Design Suite 2017.4 v1.17, the XAZU4EV and XAZU5EV devices in the -1I speed/temperature grade were production released. Revised some of the -3E speed files in Table 75, Table 87, Table 88, Table 89, Table 91, and Table 92.
11/28/2017	1.9	Updated Table 25, Table 26, and Table 27 to production for the following devices/speed/temperature grades in Vivado Design Suite 2017.4 v1.17. XCZU4CG/XCZU4EG/XCZU4EV: -2E, -2I, -1E, -1I XCZU5CG/XCZU5EG/XCZU5EV: -2E, -2I, -1E, -1I XCZU7CG/XCZU7EG/XCZU7EV: -2E, -2I, -1E, -1I XCZU17EG: -2LE and -1LI XCZU19EG: -2LE and -1LI Revised the F_{REFCLK} descriptions in Table 82. Added values to Table 95. Revised the $F_{GTYQRANGE2}$ -1 speed grade minimum in Table 111.

Date	Version	Description of Revisions
10/26/2017	1.8	In Table 1, corrected the minimum voltage for the PL System Monitor section. Added Note 4 to Table 2. Added Note 1 to Table 5. Updated Table 25, Table 26, and Table 27 to production for the following devices/speed/temperature grades in Vivado Design Suite 2017.3.1 v1.16. XCZU2CG/XCZU2EG: -2LE and -1LI XCZU3CG/XCZU3EG: -2LE and -1LI XCZU6CG/XCZU6EG: -2LE and -1LI XCZU9CG/XCZU9EG: -2LE and -1LI XCZU15EG: -2LE and -1LI XAZU2EG/XAZU3EG: -1LI Also updated speed file data for this release in Table 87, Table 88, Table 89, Table 91, and Table 92. Added specifications for Quad-SPI device clock frequency operating at 40 MHz with loopback disabled to Table 41 and Table 42.
10/05/2017	1.7	Corrected the speed file version in Table 25 and Table 27 for production release of XAZU2EG and XAZU3EG with -1I and -1Q speed/temperature ranges and the XCZU11EG: -2E, -2I, -1E, -1I to Vivado Design Suite 2017.3 v1.15.
10/03/2017	1.6	In Table 1, because the voltages are covered in Table 6, removed the note on V_{IN} for I/O input voltage for HD I/O banks. Updated T_{SOL} by package in Table 1. In Table 2, updated V_{CCINT_VCU}. Added Note 2 to Table 6 and Table 8. Added the XAZU2EG and XAZU3EG production devices in -1I and -1Q speed/temperature ranges using Vivado Design Suite 2017.3 v1.14. In Table 25, Table 26, and Table 27, updated the XCZU11EG: -2E, -2I, -1E, -1I to production in Vivado Design Suite 2017.3 v1.14. Also updated speed file data for this release in Table 87, Table 88, Table 89, Table 91, and Table 92.
9/01/2017	1.5	Updated Table 25, Table 26, and Table 27 to production release for the following devices/speed/temperature grades in Vivado Design Suite 2017.2.1. XCZU17EG: -2E, -2I, -1E, -1I XCZU19EG: -2E, -2I, -1E, -1I In Table 45, revised the minimum $T_{SDSDRDCK3}$ value. In Table 76, revised the $T_{OUTBUF_DELAY_O_PAD}$ -2 (V_{CCINT} = 0.85V) values for DIFF_SSTL135_S, DIFF_SSTL15_DCI_S, DIFF_SSTL15_S, DIFF_SSTL18_I_DCI_S, and DIFF_SSTL18_I_S. Revised some of the -3E and -1LI/-2LE (V_{CCINT} = 0.72V) speed files in Table 75, Table 76, Table 77, Table 87, Table 88, Table 89, Table 91, and Table 92. Revised the Integrated Interface Block for Interlaken section.
6/28/2017	1.4	Updated Table 25, Table 26, and Table 27 to production release for the following devices/speed/temperature grades in Vivado Design Suite 2017.2. XCZU15EG: -2E, -2I, -1E, -1I Updated Note 15 in Table 2 for clarity. Updated Table 14 to remove Note 3, Note 6, and the MIPI_DPHY_DCI_LP row. These changes are because the DCI and POD standards are not supported in HD I/O banks. Added Note 5 to Table 30. Updated descriptions in Table 38. Revised the -3E and -1LI/-2LE (V_{CCINT} = 0.72V) speed files in Table 75, Table 76, Table 77, Table 87, Table 88, Table 89, Table 91, and Table 92. Updated the F_{MAX} symbol names and values in Table 81. Added Note 1 to Table 83. Added Note 3 to Table 124.

Date	Version	Description of Revisions
4/20/2017	1.3	Updated Table 25, Table 26, and Table 27 to production release for the following devices/speed/temperature grades in Vivado Design Suite 2017.1. XCZU2CG and XCZU2EG: –2E, -2I, -1E, -1I XCZU3CG and XCZU3EG: –2E, -2I, -1E, -1I XCZU6CG and XCZU6EG: –2E, -2I, -1E, -1I XCZU9CG and XCZU9EG: –2E, -2I, -1E, -1I Added -2E (V_{CCINT} = 0.85V) speed grade where applicable. Removed -3E speed grade from the XCZU2 and XCZU3 devices in Table 26 and where applicable. In Table 1, updated values and Note 2. In Table 2, added or updated many of the notes. Updated Table 4 including the notes and added Note 6. Moved and updated Table 5. Added Table 8. Updated Table 9 and added Note 4. Updated Table 10 and added Note 1. Revised V_{ICM} in Table 23. Updated Table 30 and removed Note 1. Added Table 31 and Table 32. Updated Table 33 and removed F_{FTMCLK}. Updated $T_{RFPSCLK}$ in Table 34. Updated Note 1 in Table 37. Updated Table 39. Removed the PS NAND Memory Controller Interface section. Significant changes to Table 41 and removed Note 3. Significant changes to Table 42 and updated Note 1. Removed $F_{TSU_REF_CLK}$ from Table 44. Revised Table 45 and added Note 2 and Note 3. Revised Table 46 and added Note 2 and Note 3. Updated Table 48. Updated Table 51 and removed Note 2. Revised Table 52. Revised many of the tables in the PS-GTR Transceiver section. Revised Table 70 and Table 71. Removed Note 8 from Table 74. Updated the values in Table 75, Table 76, Table 77, Table 80 Table 87, Table 88, Table 89, Table 91, and Table 92 to the Vivado Design Suite 2017.1 speed specifications. Updated the values in Table 81 and Table 82. Added values to Table 93. Updated Table 95. Revised D_{VPPOUT} in Table 96. Update the values in Table 98. Added Note 6 to Table 104. Updated Table 105 and Table 106. Revised D_{VPPOUT} in Table 108. Updated the values in Table 110. In Table 111 updated the -1 (0.85V) specifications and removed Note 1. In Table 116 updated the -1 (0.85V) specifications and added Note 6. In Table 117 and Table 118, added the 28.21 jitter tolerance values and revised the notes. Revised the Integrated Interface Block for Interlaken and Integrated Interface Block for 100G Ethernet MAC and PCS sections. Revised the Configuration Switching Characteristics section. Removed the eFUSE Programming Conditions table and added the specifications to Table 2 and Table 3.
2/10/2017	1.2	Updated some of the maximum voltages in the Processor System (PS) section and other specifications in the Programmable Logic (PL) and GTH or GTY Transceiver sections of Table 1. Updated Table 2, Table 4, Table 6, Table 8, and Table 9. Revised the Power Supply Sequencing section including Table 10. Added PS and VCU ramp times to Table 11. Revised V_{ODIFF} in Table 24. Updated Table 25. Added Note 1 to Table 26. Table 27 replaces the previous three PS memory performance tables. Added values to Table 34,Table 37, and Table 38. Deleted the waveforms in the PS Switching Characteristics section (Figures 1-16 and Figures 25-26). Revised values in the PS NAND Memory Controller Interface section. Added and updated data in Table 40. Added Note 3 to Table 41. Added Note 3 to Table 42. Added Note 1 to Table 45. Updated Table 48 and removed Note 3. Added data to Table 56. Updated Table 60. Added Table 61. Updated Table 63. Revised Table 69. Added data to Table 70. Added Note 2 to Table 71. Updated Table 74 and added Note 4. Updated V_L and V_H values in Table 78. Added T_{MINPER_CLK}, revised F_{REFCLK}, and Note 1 to Table 82. Added MMCM_F_{DPRCLK_MAX} to Table 85 and PLL_F_{DPRCLK_MAX} to Table 86. Added data to Table 96, Table 98, Table 100, Table 103, and updated the note references in Table 104. Updated Table 105 and added Note 8. Updated Table 106 and added Note 7. Added more protocols, Note 1 and Note 2 to Table 107. Removed the GTH Transceiver Protocol Jitter Characteristics section because it is covered in Table 107. Added Note 1 to Table 111. Added data to Table 108, Table 110, Table 112, Table 115. Added Note 2 to Table 114. Added note references in Table 116. Updated Table 117 and added Note 8. Updated Table 118 and added Note 7. Added more protocols and Note 3 to Table 119. Removed the GTY Transceiver Protocol Jitter Characteristics section because it is covered in Table 119. Revised Table 126. Added T_{POR} and updated F_{ICAPCK} in Table 129. Updated the Automotive Applications Disclaimer.

Date	Version	Description of Revisions
6/20/2016	1.1	Updated the Summary description. In Table 1, revised V_{IN} for HP I/O banks and added clarifications to some descriptions and symbols. Added I_{RPU}, I_{RPD}, and Note 4 to Table 2 and updated $V_{PS_MGTRAVCC}$, the PL System Monitor section, and Note 3 and Note 5. Updated Note 5 in Table 4. Updated the PS Power-On/Off Power Supply Sequencing section including all the voltage supply names. Added MIPI_DPHY_DCI to Table 14, Table 15, and Table 17. Updated Table 23, including removing the V_{CCO} specification and adding Note 1. Added Note 1 to Table 24. Updated Table 25 speed specifications for Vivado Design Suite 2016.1. Added values to Table 28. Updated the -2 value in Table 29. Added $F_{DPLIVEVIDEO}$ and updated $F_{FCIDMACLK}$ in Table 33. Added VCO frequencies to Table 36. Added the T_{PSPOR} minimum to Table 37 and updated Note 1. Added Table 38. Added value delineation over V_{CCINT} operating voltages in Table 39. Revised values for F_{TCK} and T_{TAPTCK}/T_{TCKTAP} in Table 40 and added value delineation over V_{CCINT} operating voltages. Updated the PS NAND Memory Controller Interface section. Revised some units and Note 1 in Table 41 and Table 42. Removed Figure 6: Quad-SPI Interface (Feedback Clock Disabled) Timing. Updated Note 1 of Table 43. Added $F_{TSI_REF_CLK}$ to Table 44 and updated Note 1. In Table 45, revised $T_{DCSDHSCLK1}$, $T_{DCSDHSCLK2}$, and $T_{DCSDHSCLK3}$ and Note 1. In Table 46, revised Note 1. In Table 47, revised Note 1. Revised Table 48, including Note 1, and added Note 2 and Note 3. In Table 50, Table 49, Table 51, and Table 53, revised Note 1. Updated Table 71. Replaced Table 74. Updated Table 75 and Table 76. Updated Table 78 and Table 79. In Table 80, added the Block RAM and FIFO Clock-to-Out Delays section. Updated the R_{IN} and C_{EXT} values in Table 57 and Table 97. Updated the -2 (0.72V) and -1 (0.72V) values and added Note 1 to Table 99. Added Table 102 and Table 114. Added Note 2 to Table 108. Revised data in Table 111. Revised Table 116. Revised data and added notes in the Integrated Interface Block for Interlaken section and Table 123. Moved Table 125. Revised INL in Table 126. Added notes to Table 127 and Table 128. In the eFUSE and Programming Conditions table, updated the I_{PSFS} description.
11/24/2015	1.0	Initial Xilinx release.

Please Read: Important Legal Notices

The information disclosed to you hereunder (the "Materials") is provided solely for the selection and use of Xilinx products. To the maximum extent permitted by applicable law: (1) Materials are made available "AS IS" and with all faults, Xilinx hereby DISCLAIMS ALL WARRANTIES AND CONDITIONS, EXPRESS, IMPLIED, OR STATUTORY, INCLUDING BUT NOT LIMITED TO WARRANTIES OF MERCHANTABILITY, NON-INFRINGEMENT, OR FITNESS FOR ANY PARTICULAR PURPOSE; and (2) Xilinx shall not be liable (whether in contract or tort, including negligence, or under any other theory of liability) for any loss or damage of any kind or nature related to, arising under, or in connection with, the Materials (including your use of the Materials), including for any direct, indirect, special, incidental, or consequential loss or damage (including loss of data, profits, goodwill, or any type of loss or damage suffered as a result of any action brought by a third party) even if such damage or loss was reasonably foreseeable or Xilinx had been advised of the possibility of the same. Xilinx assumes no obligation to correct any errors contained in the Materials or to notify you of updates to the Materials or to product specifications. You may not reproduce, modify, distribute, or publicly display the Materials without prior written consent. Certain products are subject to the terms and conditions of Xilinx's limited warranty, please refer to Xilinx's Terms of Sale which can be viewed at https://www.xilinx.com/legal.htm#tos; IP cores may be subject to warranty and support terms contained in a license issued to you by Xilinx. Xilinx products are not designed or intended to be fail-safe or for use in any application requiring fail-safe performance; you assume sole risk and liability for use of Xilinx products in such critical applications, please refer to Xilinx's Terms of Sale which can be viewed at https://www.xilinx.com/legal.htm#tos.

AUTOMOTIVE APPLICATIONS DISCLAIMER

AUTOMOTIVE PRODUCTS (IDENTIFIED AS "XA" IN THE PART NUMBER) ARE NOT WARRANTED FOR USE IN THE DEPLOYMENT OF AIRBAGS OR FOR USE IN APPLICATIONS THAT AFFECT CONTROL OF A VEHICLE ("SAFETY APPLICATION") UNLESS THERE IS A SAFETY CONCEPT OR REDUNDANCY FEATURE CONSISTENT WITH THE ISO 26262 AUTOMOTIVE SAFETY STANDARD ("SAFETY DESIGN"). CUSTOMER SHALL, PRIOR TO USING OR DISTRIBUTING ANY SYSTEMS THAT INCORPORATE PRODUCTS, THOROUGHLY TEST SUCH SYSTEMS FOR SAFETY PURPOSES. USE OF PRODUCTS IN A SAFETY APPLICATION WITHOUT A SAFETY DESIGN IS FULLY AT THE RISK OF CUSTOMER, SUBJECT ONLY TO APPLICABLE LAWS AND REGULATIONS GOVERNING LIMITATIONS ON PRODUCT LIABILITY.

FPGAMALL
Authorized Distributor

OUR CERTIFICATE

A long-term cooperative relationship can be built between global customers and us by providing excellent products

Business Type	Trading Company, Distributor/Wholesaler
Main Products	Electronic Integrated Circuit
Certifications	ISO9001
Total Annual Revenue	US$2.5 Million - US$5 Million
Country / Region	Hongkong, China
Total Employees	100 - 200 People
Year Established	2018
Main Markets	North America South Asia Western Europe

sales@fpgamall.com
+00852-56428680